Department of Design and Construction

THE CITY OF NEW YORK
DEPARTMENT OF DESIGN AND CONSTRUCTION
DIVISION OF INFRASTRUCTURE

30-30 THOMSON AVENUE
LONG ISLAND CITY, NEW YORK 11101-3045
TELEPHONE (718) 391-1000
WEBSITE www.nyc.gov/buildnyc

LAW

VOLUME 1 OF 3

BID BOOKLET

FOR FURNISHING ALL LABOR AND MATERIALS NECESSARY AND REQUIRED FOR:

PROJECT ID: SEQ200531

STORM SEWER EXTENSIONS

IN 239TH STREET BETWEEN 87TH AVENUE AND 88TH AVENUE
IN 87TH AVENUE BETWEEN CROSS ISLAND PARKWAY AND 239TH STREET
IN CROSS ISLAND PARKWAY WEST SERVICE ROAD BETWEEN 90TH AVENUE AND 87TH AVENUE

CAPITAL PROJECT WM-1

WATER MAIN WORK

IN 239TH STREET BETWEEN 87TH AVENUE AND 88TH AVENUE
IN 87TH AVENUE BETWEEN CROSS ISLAND PARKWAY AND 239TH STREET
IN CROSS ISLAND PARKWAY WEST SERVICE ROAD BETWEEN 90TH AVENUE AND 87TH AVENUE

Together With All Work Incidental Thereto
BOROUGH OF QUEENS
CITY OF NEW YORK

FOR THE DEPARTMENT OF ENVIRONMENTAL PROTECTION
PREPARED BY
IN-HOUSE DESIGN

November 6, 2017

8-039

Bid Tab- Revised**

Description	STORM SEWER EXTENSIONS IN 239TH ST BETWEEN 87TH AVE AND 88TH AVE, ETC-BOROUGH OF QUEENS		
Bid Date	3/6/2018	FMS ID	SEQ200531
Estimated Cost	$7,509,357.00	Client Agency	DEP
Bid Security	Not less than 2% of Total Bid Price	PLA PQL	NO NO
Time Allowed	635 CCD	Federal Funded:	NO
Addendum	4	Contract Manager	Chinwee Summors
PIN	8502018SE0015C	Project Manager	Macio, Gary
E-PIN	85018B0059	Selective Bidding	☐Yes ☒No

Bid Rank	Vendor	Bid Amount	Security Type
1	PERFETTO ENTERPRISES COMPANY, INC.	$7,512,000.00	Bond Withdrew*
2	INTER LAPERUTA JV	$8,996,475.35*	Bond
3	PAUL J. SCARIANO INC.	$9,321,253.07	Bond
4	A.L.A.C. CONTRACTING CORP.	$9,669,669.69	Bond
5	TRIUMPH CONSTRUCTION CORP.	$10,169,205.97	Bond
6	HUICATAO CORP	$10,222,222.00	Bond
7	NY ASPHALT INC	$10,440,945.17	Bond
8	LAWS CONSTRUCTION CORP.	$10,795,811.38	Bond
9	JLJ IV ENTERPRISES INC.	$10,984,999.95	Bond
10	VILLA CONSTRUCTION INC.	$11,647,000.00	Bond
11	G & M EARTH MOVING, INC.	$14,019,000.00	Bond

Bid Rank	Vendor	Bid Amount	Security Type
12	C.A.C. INDUSTRIES, INC.	$14,637,713.00	Bond
13	TULLY CONSTRUCTION CO. INC.	$15,166,572.52	Bond

Recorder: Maria Johnston Ext. 1234 **Approver:** Lorraine Holley

Department of Design and Construction

Ana Barrio
Acting Commissioner

Justin Walter
Chief Administrative Officer
Administration

May 30, 2018

CERTIFIED MAIL - RETURN RECEIPT REQUEST
INTER LAPERUTA JV
35 Colonial Place
Mount Vernon, NY 10550

RE: FMS ID: SEQ200531
E-PIN: 85018B0059001
DDC PIN: 8502018SE0015C
STORM SEWER EXTENSIONS IN 239TH ST BETWEEN 87TH AVE AND 88TH AVE, ETC-BOROUGH OF QUEENS
NOTICE OF AWARD

Dear Contractor:

You are hereby awarded the above referenced contract based upon your bid in the amount of $8,996,475.35 submitted at the bid opening on March 06, 2018. Within ten (10) days of your receipt of this notice of award, you are required to take the actions set forth in Paragraphs (1) through (3) below. For your convenience, attached please find a copy of Schedule A of the General Conditions to the Contract, which sets forth the types and amounts of insurance coverage required for this contract.

(1) Execute two copies of the Agreement in the Contracts Unit, 30-30 Thomson Avenue, 1st Floor, Long Island City, New York (IDCNY Building). A Commissioner of Deeds will be available to witness and notarize your signature. The Agreement must be signed by an officer of the corporation or a partner of the firm.

(2) Submit to the Contracts Unit two properly executed performance and payment bonds. If required for this contract, copies of performance and payment bonds are attached.

(3) Submit to the Contracts Unit the following insurance documentation: (a) original certificate of insurance for general liability in the amount required by Schedule A, and (b) original certificates of insurance or other proof of coverage for workers' compensation and disability benefits, as required by New York State Law. The insurance documentation specified in this paragraph is required for registration of the contract with the Comptroller's Office.

Department of Design and Construction

On or before the contract commencement date, you are required to submit all other certificates of insurance and/or policies in the types and amounts required by Schedule A. Such certificates of Insurance and/or policies must be submitted to the Agency Chief Contracting Office, Attention: Risk Manager, Fourth Floor at the above indicated department address.

Your attention is directed to the section of the Information for Bidders entitled "Failure to Execute Contract". As indicated in this section, in the event you fail to execute the contract and furnish the required bonds within the (10) days of your receipt of this notice of award, your bid security will be retained by the City and you will be liable for the difference between your bid price and the price for which the contract is subsequently awarded, less the amount of the bid security retained.

Sincerely,

Michael Shipman
Director of Contracts

NOTICE TO BIDDERS:

NEW NOISE REQUIREMENTS

The bidder is notified that conformance with NYC City Council Introduction 1653-2017 (https://laws.council.nyc.gov/legislation/int-1653-2017/) is required for all work to be performed under this contract.

No separate payment will be made for conformance with this requirement, and the costs thereof must be included in the prices bid for all items of work.

Notices to Bidders

Pre-Bid Questions (PBQs)

Please be advised that PBQs should be submitted to the Agency Contact Person (CSB_projectinquiries@ddc.nyc.gov) at least five (5) business days (by 5:00 PM EST) prior to the bid opening date as indicated in ATTACHMENT 1 - BID INFORMATION, page A-1 and SCHEDULE B, page 13, VOLUME 1 OF 3 of this BID BOOKLET.

All PBQs must reference the Project ID. If a Bidder has multiple PBQs for the same Project ID, the PBQs must be numbered sequentially, even if they are submitted separately.

Apprenticeship Program

If Apprenticeship Program is required as noted on Page 19 of this BID BOOKLET, the following notice applies:

Please be advised that, pursuant to the authority granted to the City under Labor Law §816-b, the New York City Department of Design and Construction hereby requires that the contractor awarded a contract as a result of this solicitation, and any of its subcontractors with subcontracts worth two million dollars or over, have, prior to entering into such contract or subcontract, apprenticeship agreements appropriate for the type and scope of work to be performed that have been registered with, and approved by, the New York State Commissioner of Labor. In addition, the contractor and its subcontractors will be required to show that such apprenticeship program/s have successfully passed the two year Probation period following the initial registration date of such program/s with the New York State Department of Labor.

The failure to prove, upon request, that these requirements have been met shall result in the contract not being awarded to the contractor or the subcontractor not being approved.

Please be further advised that, pursuant to Labor Law §220, the allowable ratio of apprentices to journeypersons in any craft classification shall not be greater than the ratio permitted to the contractor as to its workforce on any job under the registered apprenticeship program.

Notices to Bidders

PASSPort Disclosure Filing

All vendors that intend to do business with the City of New York must complete a disclosure process in order to be considered for a contract. This disclosure process was formerly completed using Vendor Information Exchange System (VENDEX) paper-based forms. The City of New York has moved collection of vendor disclosure information online. In early August 2017, the New York City Mayor's Office of Contract Services (MOCS) launched the **Procurement and Sourcing Solutions Portal (PASSPort)**, a new online procurement system that replaced the paper-VENDEX process. In anticipation of awards, all bidders must create online accounts in the new PASSPort system, and file all disclosure information using PASSPort. **Paper submissions, including certifications of no changes to existing VENDEX packages will not be accepted in lieu of complete online filings.**

All vendors that intend to do business with the City, but specifically those that fall into any of the following categories, are required to enroll:

- Have a pending award with a City Agency; or
- Hold a current contract with a City Agency and have either an expiring VENDEX or expiring Certificate of No Change.

The Department of Design and Construction (DDC) and MOCS hereby notifies all proposers that the PASSPort system is available, and that disclosure filing completion is required prior to any award through this competitive bid.

To enroll in PASSPort and to access the PASSPort website (including online training), please visit www.nyc.gov/passport. Contact MOCS at passport@mocs.nyc.gov for additional information and technical support.

Notices to Bidders

NYC Construction Loan Pilot Program

The New York City Department of Small Business Services (SBS), in conjunction with the New York Business Development Corporation (NYBDC), have established **a NYC Construction Loan** pilot program to provide prime contractors and subcontractors financing for mobilization costs on certain City construction projects.

Under this initiative, loans are available for early stage mobilization needs such as insurance, labor, supplies and equipment. Bidders are strongly encouraged to visit "Growing Your Business" at www.nyc.gov/nycbusiness to learn more about the loan or contact constructionloan@sbs.nyc.gov / (212) 513-6444 to obtain details and to determine preliminary eligibility.

A successful loan applicant will be required to make an assignment of its contract (or subcontract) payments to the lender NYBDC until the loan is repaid. If the loan is to a subcontractor, a prime contractor must honor the terms of such an assignment.

A prime contractor may not discriminate against a subcontractor or potential subcontractor by reason of the subcontractor's participation, or nonparticipation, in the NYC Construction loan program.

(NO TEXT THIS PAGE)

CITY OF NEW YORK

DEPARTMENT OF DESIGN AND CONSTRUCTION DIVISION OF INFRASTRUCTURE

BID BOOKLET

FOR FURNISHING ALL LABOR AND MATERIALS NECESSARY AND REQUIRED FOR:

PROJECT ID: SEQ200531

STORM SEWER EXTENSIONS

IN 239TH STREET BETWEEN 87TH AVENUE AND 88TH AVENUE
IN 87TH AVENUE BETWEEN CROSS ISLAND PARKWAY AND 239TH STREET
IN CROSS ISLAND PARKWAY WEST SERVICE ROAD BETWEEN 90TH AVENUE AND 87TH AVENUE

CAPITAL PROJECT WM-1

WATER MAIN WORK

IN 239TH STREET BETWEEN 87TH AVENUE AND 88TH AVENUE
IN 87TH AVENUE BETWEEN CROSS ISLAND PARKWAY AND 239TH STREET
IN CROSS ISLAND PARKWAY WEST SERVICE ROAD BETWEEN 90TH AVENUE AND 87TH AVENUE

Together With All Work Incidental Thereto
BOROUGH OF QUEENS

NO TEXT ON THIS PAGE

PROJECT ID: SEQ200531

CITY OF NEW YORK
DEPARTMENT OF DESIGN AND CONSTRUCTION
DIVISION OF INFRASTRUCTURE

BID BOOKLET

TABLE OF CONTENTS

SECTION		PAGE
PART A		
1.	Table of Contents	1
2.	Special Notice to Bidders	2
3.	Attachment 1 – Bid Information	A-1
4.	Bid Schedule	B-1
5.	Bid Form	C-1
6.	Affirmation	C-6
7.	Bid Bond	C-7
8.	M/WBE Program: M/WBE Utilization Plan	5
9.	Apprenticeship Program Requirements	19
PART B		
10.	Safety Questionnaire	22
11.	Pre-award Process	25
12.	Project Reference Form	27
13.	Contract Certificate	30
14.	Vendex Compliance	31
15.	Iran Divestment Act Compliance Rider	32
16.	Construction Employment Report	34

(NO TEXT ON THIS PAGE)

CITY OF NEW YORK
DEPARTMENT OF DESIGN AND CONSTRUCTION
DIVISION OF INFRASTRUCTURE

SPECIAL NOTICE TO BIDDERS

BID SUBMISSION REQUIREMENTS

THE FOLLOWING DOCUMENTS ARE TO BE COMPLETED AND SUBMITTED WITH THE BID:

1. Bid Schedule and Bid Form, including Affirmation
2. Bid Security (if required, see Attachment 1 on Page A-1)
3. Schedule B: M/WBE Utilization Plan (if participation goals have been established)

FAILURE TO SUBMIT ITEMS (1), (2) AND (3)
WILL RESULT IN THE DISQUALIFICATION OF THE BID.

4. Safety Questionnaire
5. Construction Employment Report (if bid is $1,000,000 or more)
6. Contract Certificate (if bid is less than $1,000,000)
7. Confirmation of Vendex Compliance
8. Bidder's Certification of Compliance with Iran Divestment Act
9. Special Experience Requirements (if applicable)
10. Apprenticeship Program Questionnaire (if applicable)
11. Any addenda issued prior to the receipt of bids

FAILURE TO SUBMIT ITEMS (4) THROUGH (11)
MAY RESULT IN THE DISQUALIFICATION OF THE BID.

NOTES:

(1) All of the above referred to blank forms to be completed and submitted with the bid are included in the BID BOOKLET.

(2) If the bidder has any questions or requires additional information, please contact the Department of Design and Construction by phone (718-391- 2601) or by fax (718-391-2627).

(3) VENDEX QUESTIONNAIRES: The Bidder is advised that Vendex Questionnaires and procedures have been changed. Vendex Questionnaires, as well as detailed instructions, may be obtained at www.nyc.gov/vendex. The bidder may also obtain Vendex forms and instructions by contacting the Agency Chief Contracting Officer or the contact person for this contract.

(4) SPECIAL EXPERIENCE REQUIREMENTS: The Bidder is advised that Special Experience Requirements may apply to this contract. Such requirements are set forth on pages 3, 3a, 3b, and 4 of this Bid Booklet.

SPECIAL NOTICE TO BIDDERS

SPECIAL EXPERIENCE REQUIREMENTS (Revised 03/2014)

(A) **SPECIAL EXPERIENCE REQUIREMENTS FOR THE BIDDER:** The Special Experience Requirements set forth below apply to the bidder. Compliance with such Special Experience Requirements will be determined solely by the City prior to an award of contract. Failure to comply with the Special Experience Requirements will result in rejection of the bid as non-responsive.

The requirements in this Section (A) apply to this contract where indicated by a blackened box (■).

■ The bidder must, within the last seven (7) consecutive years prior to the bid opening, have successfully completed in a timely fashion at least one (1) project similar in scope and type to the required work. Such prior project may have been performed as a prime contractor, subcontractor or sub-subcontractor.

The Special Experience Requirements next to the blackened box below apply to the bidder. If the bidder intends to perform such work itself, it must demonstrate compliance with the Special Experience Requirements. If the bidder intends to subcontract this work, the proposed subcontractor or sub-subcontractor must demonstrate compliance with the Special Experience Requirements. The contractor, subcontractor or sub-subcontractor (hereinafter referred to as the "entity") that will perform any specific area of work indicated by the blackened box below, may have performed the required prior project(s) as a prime contractor, subcontractor or sub-subcontractor. Once approved, no substitution will be permitted, unless the qualifications of the proposed replacement have been approved in writing in advance by the City.

☐ **Trunk Water Main Work:** The entity that will perform the trunk water main work must, within the last seven (7) consecutive years prior to the bid opening, have successfully completed in a timely fashion at least one (1) project similar in scope and type to the required work.

☐ **Best Management Practice Work:** Best Management Practice ("BMP") Work is any item of work in the Bid Schedule that begins with the prefix "BMP". The entity that will perform any BMP Work must, within the last five (5) consecutive years prior to the bid opening, have successfully completed in a timely fashion at least three (3) projects similar in scope and type to the required work.

For professional services in connection with BMP Work, (i.e., monitoring and reporting services), the individual who will perform the required services must, within the last five (5) consecutive years prior to the bid opening, have successfully completed in a timely fashion at least three (3) projects similar in scope and type to the required work. Additional requirements are set forth below.

☐ The individual serving as the Restoration Specialist (Construction Monitor) must be a Registered Landscape Architect licensed by the state of New York, or must have equivalent professional experience.

☐ The individual serving as the Erosion and Sediment Control Licensed/Certified Professional must be a Certified Professional in Erosion and Sediment Control (CPESC), certified by CPESC, Inc.

☐ **Micro-Tunneling/Pipe Jacking Work:** The entity that will perform the micro-tunneling/pipe jacking work must, within the last five (5) consecutive years prior to the bid opening, have successfully completed in a timely fashion at least two (2) projects similar in scope and type to the required work.

☐ **OTHER:** _____

_____

(B) **SPECIAL EXPERIENCE REQUIREMENTS FOR SPECIFIC AREAS OF WORK (to be provided after an award of contract):**

The requirements in this Section (B) apply to this contract where indicated by a blackened box (■).

The Special Experience Requirements set forth below apply to the contractor, subcontractor or sub-subcontractor that will perform the specific area of work. **Compliance with such Special Experience Requirements will be determined solely by the City after an award of contract.** After an award of contract, when requested by the City, the contractor will be required to submit the qualifications of the contractor, subcontractor or sub-subcontractor that will perform the specific area of work. If the bidder intends to perform such work itself, it must demonstrate compliance with the Special Experience Requirements. If the bidder intends to subcontract this work, the proposed subcontractor or sub-subcontractor must demonstrate compliance with the Special Experience Requirements. Once approved, no substitution will be permitted, unless the qualifications of the proposed replacement have been approved in writing in advance by the City.

Special Experience Requirements apply to the contractor, subcontractor or sub-subcontractor (hereinafter referred to as the "entity") that will perform any specific area of work indicated by a blackened box. The entity may have performed the required prior project(s) as a prime contractor, subcontractor or sub-subcontractor.

■ **Hazmat Work:** Hazmat Work is any item of work in the Bid Schedule that begins with the prefix 8.01. The entity that will perform any Hazmat Work must, within the last three (3) consecutive years prior to the bid opening, have successfully completed in a timely fashion at least five (5) projects similar in scope and type to the required work.

☐ **Pile, CFA Pile, and/or Mini-Pile Work:** The entity that will perform the Pile, CFA Pile and/or Mini-Pile Work must, within the last three (3) consecutive years prior to the bid opening, have successfully completed in a timely fashion at least two (2) projects similar in scope and type to the required work.

For professional services in connection with Pile Work, (i.e., engineering and inspection services), the individual who will perform the required services must be a Professional Engineer licensed by the state of New York. Such individual must also comply with the above requirements for prior projects.

☐ **Construction Report, Monitoring And Post-Construction Report, and Continuous Real-Time Monitoring For Vibrations And Movements And Post-Construction Report Work:** The entity that will perform the Construction Report, Monitoring For Vibrations And Movements, and Post-Construction Report Work must, within the last three (3) consecutive years prior to the bid opening, have successfully completed in a timely fashion at least two (2) projects similar in scope and type to the required work.

For professional services in connection with Reporting and Monitoring Work, (i.e., engineering and inspection services), the individual who will perform the required services must be a Professional Engineer licensed by the state of New York. Such individual must also comply with the above requirements for prior projects.

☐ **OTHER:** _____

_____

(C) **SPECIFICATIONS:** In the event of any conflict, omission or inconsistency between (1) the Specifications and/or Contract Drawings, and (2) the Special Experience Requirements in Section (B) of the Special Notice To Bidders, the special experience listed in the Specifications and/or Contract Drawings shall be controlling. The Special Experience Requirements in Section (B) of this Special Notice To Bidders are only for the convenience of the bidders.

(D) **SUBMISSION REQUIREMENTS:** For each project submitted to demonstrate compliance with the Special Experience Requirements, the bidder must complete and submit the Qualification Form included in the Bid Booklet. The City will only evaluate a project if the following criteria are met: (1) the project is described on the Qualification Form, and (2) all information on the Qualification Form is provided. The City will not evaluate any project which does not comply with the criteria set forth herein, including any project which is referred to only on the resume of an individual.

If Special Experience Requirements are indicated for any specific area of work, the submission requirement set forth above shall apply to the entity that will perform the specific area of work.

(E) **CONDITIONS:** In determining compliance with the Special Experience Requirements for the bidder set forth above, the City may consider prior projects completed by principal(s) or other employees of the bidder while affiliated with another entity, subject to the conditions set forth below.

- Any principal or other employee on whose prior experience the bidder is relying to demonstrate compliance with this special experience requirement must have held the following: (a) a significant management role in the prior entity with which he/she was affiliated, and (b) a significant management role in the entity submitting the bid for a period of at least six (6) months or from the inception of the bidding entity.

- The bidder may not rely on the experience of its principals or other employees to demonstrate compliance with any other requirements, including without limitation, financial requirements or requirements for a specified minimum amount of annual gross revenues.

(F) **JOINT VENTURES:** In the event the bidder is a joint venture, at least one firm in the joint venture must meet the above described experience requirements.

Qualification Form

List previous projects completed to meet the special experience requirements for this contract. Please photocopy this form for submission of all required projects.

Name of Contractor: Inter LaPenta JV

Name of Project: SER200272: Dixon Ave

Location of Project: Staten Island

Owner or Owner's representative (Architect or Engineer) who is familiar with the work performed:

Name: DDC

Title: _____ Phone Number: _____

Brief description of the Project completed or the Project in progress: Sewer + Water main Install

Was the Project performed as a prime, a subcontractor or a sub-subcontractor: Prime

Amount of Contract, Subcontract or Sub-subcontract: $8.3 MM

Start Date and Completion Date: 2016

****

Name of Contractor: Inter LaPenta JV

Name of Project: SER 200220: Barrett Ave

Location of Project: Staten Island

Owner or Owner's representative (Architect or Engineer) who is familiar with the work performed:

Name: DDC

Title: _____ Phone Number: _____

Brief description of the Project completed or the Project in progress: Sewer + Water main Install

Was the Project performed as a prime, a subcontractor or a sub-subcontractor: Prime

Amount of Contract, Subcontract or Sub-subcontract: $8.3 MM

Start Date and Completion Date: 2015

ATTACHMENT 1 - BID INFORMATION

PROJECT ID: SEQ200531
PIN: 8502018SE0015C

Description and Location of Work: STORM SEWER EXTENSIONS INCLUDING WATER MAIN WORK IN 239TH STREET BETWEEN 87TH AVENUE AND 88TH AVENUE ETC., BOROUGH OF QUEENS.

Documents Available At:
30-30 Thomson Avenue
First Floor Bid Procurement Room
Long Island City, New York 11101
8:30 A.M. to 4:00 P.M. - Monday through Friday

Submission of Bids To:
30-30 Thomson Avenue
First Floor Bid Procurement Room
Long Island City, New York 11101
Before 11:00 A.M. on **FEBRUARY 15, 2018**

Bid Opening:
30-30 Thomson Avenue
First Floor Bid Procurement Room
Long Island City, New York 11101

Time and Date: 11:00 A.M. on **FEBRUARY 15, 2018**

Pre-Bid Conference:
Yes _____ No X

If Yes, Mandatory: _____ Optional: _____
Time and Date: _____
Location: _____

Bid Security:
Bid Security is required in the amount set forth below; provided, however, bid security is not required if the TOTAL BID PRICE set forth on the Bid Form is less than $1,000,000.00.

(1) Bond in an amount not less than 10% of the TOTAL BID PRICE set forth on the Bid Form, OR
(2) Certified Check in an amount not less than 2% of the TOTAL BID PRICE set forth on the Bid Form.

Performance and Payment Security: Required for contracts in the amount of $1,000,000 or more. Performance Security and Payment Security shall each be in an amount equal to 100% of the Contract Price.

Agency Contact Person:
Lorraine Holley
Phone: 718-391-2601 FAX: 718-391-2627
Email: CSB_projectinquiries@ddc.nyc.gov

NO TEXT ON THIS PAGE

LIST OF DRAWINGS

PROJECT ID: SEQ200531
PIN: 8502018SE0015C

SHEET NO.	DESCRIPTION
1	TITLE SHEET
2	KEY MAP & LEGEND
3	SURVEY CONTROL DRAWING
4-8	PLANS AND PROFILES
9	MISCELLANEOUS DETAILS
10	DETAILS CHAMBERS 1 & 2
11	DETAILS CHAMBERS 3 & 4
12	STEP CHAMBER DETAILS
13-14	GREEN INFRASTRUCTURE DRAWINGS
15-17	MAINTENANCE AND PROTECTION OF TRAFFIC (FOR REFERENCE ONLY)
18	FDNY BASE MAP
19-24	RECORD OF BORINGS (FOR REFERENCE ONLY)
25-35	UTILITY DRAWINGS

(NO TEXT ON THIS PAGE)

BID SCHEDULE

The following pages contain the Bid Schedule. Items listed in the Bid Schedule shall comply with the requirements of the corresponding sections of the specifications detailed in the table below. All references to the Standard Specifications, Details, Standards, and Drawings shall be to the version in effect at the time of bid.

NOTES:

- "XXX" in the table below signifies any possible combination of characters and spaces.
- The table below may contain item formats which are not included in the Bid Schedule.
- ***Please refer to the Bid Schedule to determine which specifications apply.***

Item Number Format	Applicable Specifications
4.XXX 6.XXX 7.XXX 8.XXX *(Except 8.01 XXX; see below)* 9.XXX	NYC Department of Transportation ("DOT") Standard Highway Specifications, as amended in the R-Pages, located in Volume 3 of 3 herein; ***AND*** NYC DOT Standard Details of Construction; ***OR,*** ***if the item is not contained within the Standard Specifications***, then see the applicable New Sections in the I-Pages, located in Volume 3 of 3 herein.
1.XXX 50.XXX through 55.XXX 60.XXX through 66.XXX 70.XXX through 79.XXX *(Except 79.11XXX; see below)* DSS XXX DSW XXX	NYC Department of Environmental Protection ("DEP") Standard Sewer and Water Main Specifications, as amended in the R-Pages and SW-Pages, located in Volume 3 of 3 herein; ***AND*** NYC DOT Specifications for Trunk Main Work; ***AND*** NYC DOT Sewer Design Standards; ***AND*** NYC DOT Water Main Standard Drawings; ***OR,*** ***if the item is not contained within the Standard Specifications,*** then see the Amendments to the Standard Sewer and Water Main Specifications in the SW-Pages, located in Volume 3 of 3 herein.
GI-XXX PM-XXX ROW XXX	New Sections in the I-Pages, located in Volume 3 of 3 herein ***AND*** NYC DEP Standards for Green Infrastructure.
UTL-XXX	Gas Cost Sharing Standard Specifications in the EP7-Pages, located in Volume 3 of 3 herein.

BID SCHEDULE

Item Number Format	Applicable Specifications
83X.XXX HW-XXX MX.XXX MP XXX NYC-XXX NYCT-XXX NYPD-XXX P XXX PK-XXX	New Sections in the I-Pages, located in Volume 3 of 3 herein.
BMP-XXX	Specifications for Construction of Best Management Practice (BMP) and Mitigation Area in the BMP-Pages, located in Volume 3 of 3 herein.
E XXX ME XXX	Specifications for the Specialty Electrical Works in the EL-Pages, located in Volume 3 of 3 herein.
SL-XXX	NYC DOT Division of Street Lighting Specifications ***AND*** NYC Division of Street Lighting Standard Drawings.
T-XXX	NYC DOT Specifications for Traffic Signals and Intelligent Transportation Systems ***AND*** NYC DOT Traffic Signal Standard Drawings.
JB XXX	Joint Bid Specifications in the JB-Pages, located in Volume 3 of 3 herein.
8.01 XXX	Specifications for Handling, Transportation and Disposal of Nonhazardous and Potentially Hazardous Contaminated Materials in the HAZ-Pages, located in Volume 3 of 3 herein.
67.XXX	Specifications for Abatement of Coal Tar Wrap Asbestos Containing Materials in the ASB-Pages, located in Volume 3 of 3 herein.
79.11XXX	Specifications for Abatement of Transit Authority Duct Insulation Asbestos Containing Materials in the ASB-Pages, located in Volume 3 of 3 herein.

(NO FURTHER TEXT ON THIS PAGE)

NEW YORK CITY DEPARTMENT OF DESIGN AND CONSTRUCTION
DIVISION OF INFRASTRUCTURE - BUREAU OF DESIGN

Contract PIN 8502018SE0015C
Project ID SEQ200531

BID SCHEDULE

NOTE:

(1) The Agency may reject a bid if it contains unbalanced bid prices. An unbalanced bid is considered to be one containing lump sum or unit items which do not reflect reasonable actual costs plus a reasonable proportionate share of the Bidder's anticipated profit, overhead costs, and other indirect costs, anticipated for the performance of the items in question.

(2) The following bid prices on Unit Price Contracts are to be paid for the actual quantities of the several classes of work in the completed work or structure, and they cover the cost of all work, labor, material, tools, plant and appliances of every description necessary to complete the entire work, as specified, and the removal of all debris, temporary work and appliances.

(3) PLEASE BE SURE A LEGIBLE BID IS ENTERED, IN INK, FOR EACH ITEM. Alterations must be initialed in ink by the bidder.

(4) The Extended Amount entered in Column 5 shall be the product of the Estimated Quantity in Column 2 times the Unit Price Bid in Column 4.

(5) Prospective bidders must examine the Bid Schedule carefully and, before bidding, must advise the Commissioner, in writing, if any pages are missing, and must request that such missing pages be furnished them. The pages of this Bid Schedule are numbered consecutively, as follows: B - 3 through B - 59

02/14/2018
11:24AM
BID PAGES

NEW YORK CITY DEPARTMENT OF DESIGN AND CONSTRUCTION
DIVISION OF INFRASTRUCTURE - BUREAU OF DESIGN

Contract PIN 8502018SE0015C
Project ID SEQ200531

COL. 1 ITEM NUMBER (SEQUENCE NO.)	COL. 2 ENGINEER'S ESTIMATE OF QUANTITIES	COL. 3 CLASSIFICATIONS	COL. 4 UNIT PRICES (IN FIGURES) DOLLARS	CTS	COL. 5 EXTENDED AMOUNTS (IN FIGURES) DOLLARS	CTS
4.02 AB-R (001)	35.0 S.Y.	ASPHALTIC CONCRETE WEARING COURSE, 1-1/2" THICK	$ 17	.00	$ 595	.00
4.02 AF-R (002)	8,646.0 S.Y.	ASPHALTIC CONCRETE WEARING COURSE, 2" THICK	$ 25	.00	$ 216,150	.00
4.02 CA (003)	1,495.5 TONS	BINDER MIXTURE	$ 200	.00	$ 299,100	.00
4.04 H (004)	706.0 C.Y.	CONCRETE BASE FOR PAVEMENT, VARIABLE THICKNESS FOR TRENCH RESTORATION, (HIGH-EARLY STRENGTH)	$ 95	.00	$ 67,070	.00

NEW YORK CITY DEPARTMENT OF DESIGN AND CONSTRUCTION
DIVISION OF INFRASTRUCTURE - BUREAU OF DESIGN

Contract PIN 8502018SE0015C
Project ID SEQ200531

COL. 1 ITEM NUMBER (SEQUENCE NO.)	COL. 2 ENGINEER'S ESTIMATE OF QUANTITIES	COL. 3 CLASSIFICATIONS	COL. 4 UNIT PRICES (IN FIGURES) DOLLARS	CTS	COL. 5 EXTENDED AMOUNTS (IN FIGURES) DOLLARS	CTS
4.08 AA (005)	740.0 L.F.	CONCRETE CURB (18" DEEP)	$ 15	.00	$ 11,100	.00
4.08 BA (006)	80.0 L.F.	CONCRETE CURB (21" DEEP)	$ 16	.00	$ 1,280	.00
4.09 AD (007)	40.0 L.F.	STRAIGHT STEEL FACED CONCRETE CURB (18" DEEP)	$ 35	.00	$ 1,400	.00
4.09 AE (008)	630.0 L.F.	STRAIGHT STEEL FACED CONCRETE CURB (21" DEEP)	$ 45	.00	$ 28,350	.00

02/14/2018
11:24AM
BID PAGES

NEW YORK CITY DEPARTMENT OF DESIGN AND CONSTRUCTION
DIVISION OF INFRASTRUCTURE - BUREAU OF DESIGN

Contract PIN 8502018SE0015C
Project ID SEQ200531

COL. 1 ITEM NUMBER (SEQUENCE NO.)	COL. 2 ENGINEER'S ESTIMATE OF QUANTITIES	COL. 3 CLASSIFICATIONS	COL. 4 UNIT PRICES (IN FIGURES) DOLLARS	CTS	COL. 5 EXTENDED AMOUNTS (IN FIGURES) DOLLARS	CTS
4.09 BE (009)	20.0 L.F.	DEPRESSED STEEL FACED CONCRETE CURB (21" DEEP)	$ 45	.00	$ 900	.00
4.09 CE (010)	50.0 L.F.	CORNER STEEL FACED CONCRETE CURB (21" DEEP)	$ 85	.00	$ 4,250	.00
4.13 AAS (011)	1,450.0 S.F.	4" CONCRETE SIDEWALK (UNPIGMENTED)	$ 10	.00	$ 14,500	.00
4.13 BAS (012)	250.0 S.F.	7" CONCRETE SIDEWALK (UNPIGMENTED)	$ 12	.00	$ 3,000	.00

02/14/2018
11:24AM
BID PAGES

NEW YORK CITY DEPARTMENT OF DESIGN AND CONSTRUCTION
DIVISION OF INFRASTRUCTURE - BUREAU OF DESIGN

Contract PIN 8502018SE0015C
Project ID SEQ200531

COL. 1 ITEM NUMBER (SEQUENCE NO.)	COL. 2 ENGINEER'S ESTIMATE OF QUANTITIES	COL. 3 CLASSIFICATIONS	COL. 4 UNIT PRICES (IN FIGURES) DOLLARS	CTS	COL. 5 EXTENDED AMOUNTS (IN FIGURES) DOLLARS	CTS
4.13 DE (013)	20.0 S.F.	EMBEDDED PREFORMED DETECTABLE WARNING UNITS	$ 16	.00	$ 320	.00
4.13 GI-AA (014)	2,950.0 S.F.	4" CONCRETE SIDEWALK (UNPIGMENTED)	$ 10	.00	$ 29,500	.00
4.15 (015)	5.0 C.Y.	TOPSOIL	$ 25	.00	$ 125	.00
4.18 A (016)	24.0 EACH	MAINTENANCE TREE PRUNING (UNDER 12" CAL.)	$ 225	.00	$ 5,400	.00

02/14/2018
11:24AM
BID PAGES

NEW YORK CITY DEPARTMENT OF DESIGN AND CONSTRUCTION
DIVISION OF INFRASTRUCTURE - BUREAU OF DESIGN

Contract PIN 8502018SE0015C
Project ID SEQ200531

COL. 1 ITEM NUMBER (SEQUENCE NO.)	COL. 2 ENGINEER'S ESTIMATE OF QUANTITIES	COL. 3 CLASSIFICATIONS	COL. 4 UNIT PRICES (IN FIGURES) DOLLARS	CTS	COL. 5 EXTENDED AMOUNTS (IN FIGURES) DOLLARS	CTS
4.18 B (017)	17.0 EACH	MAINTENANCE TREE PRUNING (12" TO UNDER 18" CAL.)	$ 275	.00	$ 4,675	.00
4.18 C (018)	10.0 EACH	MAINTENANCE TREE PRUNING (18" TO UNDER 24" CAL.)	$ 300	.00	$ 3,000	.00
4.18 D (019)	14.0 EACH	MAINTENANCE TREE PRUNING (24" CAL. AND OVER)	$ 350	.00	$ 4,900	.00
4.20 (020)	5.0 S.Y.	SEEDING	$ 2	.00	$ 10	.00

02/14/2018
11:24AM
BID PAGES

NEW YORK CITY DEPARTMENT OF DESIGN AND CONSTRUCTION
DIVISION OF INFRASTRUCTURE - BUREAU OF DESIGN

Contract PIN 8502018SE0015C
Project ID SEQ200531

COL. 1 ITEM NUMBER (SEQUENCE NO.)	COL. 2 ENGINEER'S ESTIMATE OF QUANTITIES	COL. 3 CLASSIFICATIONS	COL. 4 UNIT PRICES (IN FIGURES) DOLLARS	CTS	COL. 5 EXTENDED AMOUNTS (IN FIGURES) DOLLARS	CTS
4.21 (021)	220.0 P/HR	TREE CONSULTANT	$ 100	.00	$ 22,000	.00
50.11MS040020 (022)	50.0 L.F.	4'-0"W X 2'-0"H SINGLE BARREL FLAT TOP REINFORCED CONCRETE STORM SEWER	$ 500	.00	$ 25,000	.00
50.11MS050026 (023)	1,050.0 L.F.	5'-0"W X 2'-6"H SINGLE BARREL FLAT TOP REINFORCED CONCRETE STORM SEWER	$ 900	.00	$ 945,000	.00
50.21M3C024D (024)	50.0 L.F.	24" R.C.P. CLASS III STORM SEWER, ON CONCRETE CRADLE	$ 450	.00	$ 22,500	.00

02/14/2018
11:24AM
BID PAGES

NEW YORK CITY DEPARTMENT OF DESIGN AND CONSTRUCTION
DIVISION OF INFRASTRUCTURE - BUREAU OF DESIGN

Contract PIN 8502018SE0015C
Project ID SEQ200531

COL. 1 ITEM NUMBER (SEQUENCE NO.)	COL. 2 ENGINEER'S ESTIMATE OF QUANTITIES	COL. 3 CLASSIFICATIONS	COL. 4 UNIT PRICES (IN FIGURES) DOLLARS	CTS	COL. 5 EXTENDED AMOUNTS (IN FIGURES) DOLLARS	CTS
50.21M3C048D (025)	500.0 L.F.	48" R.C.P. CLASS III STORM SEWER, ON CONCRETE CRADLE	$ 700	.00	$ 350,000	.00
50.21M3C054D (026)	600.0 L.F.	54" R.C.P. CLASS III STORM SEWER, ON CONCRETE CRADLE	$ 1,200	.00	$ 720,000	.00
50.21M3E030D (027)	45.0 L.F.	30" R.C.P. CLASS III STORM SEWER, ENCASED IN CONCRETE	$ 450	.00	$ 20,250	.00
50.31MC18 (028)	300.0 L.F.	18" E.S.V.P. STORM SEWER, ON CONCRETE CRADLE	$ 425	.00	$ 127,500	.00

02/14/2018
11:24AM
BID PAGES

NEW YORK CITY DEPARTMENT OF DESIGN AND CONSTRUCTION
DIVISION OF INFRASTRUCTURE - BUREAU OF DESIGN

Contract PIN 8502018SE0015C
Project ID SEQ200531

COL. 1 ITEM NUMBER (SEQUENCE NO.)	COL. 2 ENGINEER'S ESTIMATE OF QUANTITIES	COL. 3 CLASSIFICATIONS	COL. 4 UNIT PRICES (IN FIGURES) DOLLARS	CTS	COL. 5 EXTENDED AMOUNTS (IN FIGURES) DOLLARS	CTS
50.41S6E10 (029)	50.0 L.F.	10" D.I.P. CLASS 56 SANITARY SEWER, ENCASED IN CONCRETE	$ 500	.00	$ 25,000	.00
51.11C000 (030)	1.0 EACH	CHAMBER	$ 950,000	.00	$ 950,000	.00
51.11C001 (031)	1.0 EACH	CHAMBER NO. 1	$ 375,000	.00	$ 375,000	.00
51.11C002 (032)	1.0 EACH	CHAMBER NO. 2	$ 350,000	.00	$ 350,000	.00

02/14/2018
11:24AM
BID PAGES

NEW YORK CITY DEPARTMENT OF DESIGN AND CONSTRUCTION
DIVISION OF INFRASTRUCTURE - BUREAU OF DESIGN

Contract PIN 8502018SE0015C
Project ID SEQ200531

COL. 1 ITEM NUMBER (SEQUENCE NO.)	COL. 2 ENGINEER'S ESTIMATE OF QUANTITIES	COL. 3 CLASSIFICATIONS	COL. 4 UNIT PRICES (IN FIGURES) DOLLARS	CTS	COL. 5 EXTENDED AMOUNTS (IN FIGURES) DOLLARS	CTS
51.11C003 (033)	1.0 EACH	CHAMBER NO. 3	$ 245,000	00	$ 245,000	00
51.11C004 (034)	1.0 EACH	CHAMBER NO. 4	$ 215,300	00	$ 215,300	00
51.11P008 (035)	4.0 EACH	STANDARD 8'-0" DIAMETER PRECAST MANHOLE	$ 35,000	00	$ 140,000	00
51.21A000000C (036)	5.0 EACH	ACCESS MANHOLE	$ 25,000	00	$ 125,000	00

02/14/2018
11:24AM
BID PAGES

NEW YORK CITY DEPARTMENT OF DESIGN AND CONSTRUCTION
DIVISION OF INFRASTRUCTURE - BUREAU OF DESIGN

Contract PIN 8502018SE0015C
Project ID SEQ200531

COL. 1 ITEM NUMBER (SEQUENCE NO.)	COL. 2 ENGINEER'S ESTIMATE OF QUANTITIES	COL. 3 CLASSIFICATIONS	COL. 4 UNIT PRICES (IN FIGURES) DOLLARS	CTS	COL. 5 EXTENDED AMOUNTS (IN FIGURES) DOLLARS	CTS
51.21S0A1000V (037)	9.0 EACH	STANDARD MANHOLE TYPE A-1	$ 11,000	.00	$ 99,000	.00
51.21S0C1048R (038)	2.0 EACH	STANDARD MANHOLE TYPE C-1 ON 48" R.C.P. SEWER	$ 22,000	.00	$ 44,000	.00
51.21S0C1054R (039)	2.0 EACH	STANDARD MANHOLE TYPE C-1 ON 54" R.C.P. SEWER	$ 29,000	.00	$ 58,000	.00
51.23RF (040)	2.0 EACH	REPLACEMENT OF EXISTING MANHOLE FRAME AND COVER	$ 950	.00	$ 1,900	.00

02/14/2018
11:24AM
BID PAGES

NEW YORK CITY DEPARTMENT OF DESIGN AND CONSTRUCTION
DIVISION OF INFRASTRUCTURE - BUREAU OF DESIGN

Contract PIN 8502018SE0015C
Project ID SEQ200531

COL. 1 ITEM NUMBER (SEQUENCE NO.)	COL. 2 ENGINEER'S ESTIMATE OF QUANTITIES	COL. 3 CLASSIFICATIONS	COL. 4 UNIT PRICES (IN FIGURES) DOLLARS	CTS	COL. 5 EXTENDED AMOUNTS (IN FIGURES) DOLLARS	CTS
51.31S00254R (041)	1.0 EACH	STANDARD DROP-PIPE MANHOLE TYPE II ON 54" R.C.P. SEWER	$ 97,500	.00	$ 97,500	.00
51.41S001 (042)	28.0 EACH	STANDARD CATCH BASIN, TYPE 1	$ 9,500	.00	$ 266,000	.00
51.42S1SO (043)	2.0 EACH	INCREMENTAL COST OF STANDARD CATCH BASIN TYPE 3 WITH CURB PIECE IN LIEU OF STANDARD CATCH BASIN TYPE 1	$ 2,300	.00	$ 4,600	.00
52.11D12 (044)	425.0 L.F.	12" DUCTILE IRON PIPE BASIN CONNECTION	$ 350	.00	$ 148,750	.00

02/14/2018
11:24AM
BID PAGES

NEW YORK CITY DEPARTMENT OF DESIGN AND CONSTRUCTION
DIVISION OF INFRASTRUCTURE - BUREAU OF DESIGN

Contract PIN 8502018SE0015C
Project ID SEQ200531

COL. 1 ITEM NUMBER (SEQUENCE NO.)	COL. 2 ENGINEER'S ESTIMATE OF QUANTITIES	COL. 3 CLASSIFICATIONS	COL. 4 UNIT PRICES (IN FIGURES) DOLLARS	CTS	COL. 5 EXTENDED AMOUNTS (IN FIGURES) DOLLARS	CTS
53.11DR (045)	1,500.0 L.F.	TELEVISION INSPECTION AND DIGITAL AUDIO-VISUAL RECORDING OF SEWERS	$ 6	00	$ 9,000	00
6.02 AAN (046)	1,040.0 C.Y.	UNCLASSIFIED EXCAVATION	$ 75	00	$ 78,000	00
6.03 AA (047)	7.0 S.Y.	STRIPPING PAVEMENT SURFACE (ASPHALTIC CONCRETE)	$ 13	00	$ 91	00
6.09 GI-T1 (048)	320.0 L.F.	CONCRETE HEADER, TRAPEZOID-SHAPE (6" WIDE AT TOP X 15" DEEP X 9" WIDE AT BASE)	$ 30	00	$ 9,600	00

NEW YORK CITY DEPARTMENT OF DESIGN AND CONSTRUCTION
DIVISION OF INFRASTRUCTURE - BUREAU OF DESIGN

Contract PIN 8502018SE0015C
Project ID SEQ200531

COL. 1 ITEM NUMBER (SEQUENCE NO.)	COL. 2 ENGINEER'S ESTIMATE OF QUANTITIES	COL. 3 CLASSIFICATIONS	COL. 4 UNIT PRICES (IN FIGURES) DOLLARS	CTS	COL. 5 EXTENDED AMOUNTS (IN FIGURES) DOLLARS	CTS
6.25 RS (049)	822.0 S.F.	TEMPORARY SIGNS	$ 1	.00	$ 822	.00
6.26 (050)	280.0 L.F.	TIMBER CURB	$ 1	.00	$ 280	.00
6.28 AA (051)	104.0 L.F.	LIGHTED TIMBER BARRICADES	$ 1	.00	$ 104	.00
6.29 TTM (052)	10.0 EACH	TEMPORARY TUBULAR MARKERS	$ 25	.00	$ 250	.00

02/14/2018
11:24AM
BID PAGES

NEW YORK CITY DEPARTMENT OF DESIGN AND CONSTRUCTION
DIVISION OF INFRASTRUCTURE - BUREAU OF DESIGN

Contract PIN 8502018SE0015C
Project ID SEQ200531

COL. 1 ITEM NUMBER (SEQUENCE NO.)	COL. 2 ENGINEER'S ESTIMATE OF QUANTITIES	COL. 3 CLASSIFICATIONS	COL. 4 UNIT PRICES (IN FIGURES) DOLLARS	CTS	COL. 5 EXTENDED AMOUNTS (IN FIGURES) DOLLARS	CTS
6.34 RXS (053)	25.0 L.F.	REMOVE, STORE, AND REINSTALL EXISTING CHAIN LINK FENCE	$ 35	.00	$ 875	.00
6.40 CU (054)	27.0 MONTH	ENGINEER'S FIELD OFFICE (JOINT USE) (TYPE CU)	$ 4,500	.00	$ 121,500	.00
6.44 (055)	7,022.4 L.F.	THERMOPLASTIC REFLECTORIZED PAVEMENT MARKINGS (4" WIDE)	$ 1	.00	$ 7,022	.40
6.49 (056)	1,150.0 L.F.	TEMPORARY PAVEMENT MARKINGS (4" WIDE)	$ 0	.01	$ 11	.50

NEW YORK CITY DEPARTMENT OF DESIGN AND CONSTRUCTION
DIVISION OF INFRASTRUCTURE - BUREAU OF DESIGN

Contract PIN 8502018SE0015C
Project ID SEQ200531

COL. 1 ITEM NUMBER (SEQUENCE NO.)	COL. 2 ENGINEER'S ESTIMATE OF QUANTITIES	COL. 3 CLASSIFICATIONS	COL. 4 UNIT PRICES (IN FIGURES) DOLLARS	CTS	COL. 5 EXTENDED AMOUNTS (IN FIGURES) DOLLARS	CTS
6.50 (057)	2.0 EACH	CLEANING OF DRAINAGE STRUCTURES	$ 425	.00	$ 850	.00
6.51 GI-BD (058)	3.0 C.Y.	PAVEMENT KEY ALONG CURB LINE (3' TO 6' WIDE)	$ 100	.00	$ 300	.00
6.52 CG (059)	520.0 P/HR	CROSSING GUARD	$ 45	.00	$ 23,400	.00
6.53 (060)	945.0 L.F.	REMOVE EXISTING LANE MARKINGS (4" WIDE)	$ 0	.01	$ 9	.45

02/14/2018
11:24AM
BID PAGES

NEW YORK CITY DEPARTMENT OF DESIGN AND CONSTRUCTION
DIVISION OF INFRASTRUCTURE - BUREAU OF DESIGN

Contract PIN 8502018SE0015C
Project ID SEQ200531

COL. 1 ITEM NUMBER (SEQUENCE NO.)	COL. 2 ENGINEER'S ESTIMATE OF QUANTITIES	COL. 3 CLASSIFICATIONS	COL. 4 UNIT PRICES (IN FIGURES) DOLLARS	CTS	COL. 5 EXTENDED AMOUNTS (IN FIGURES) DOLLARS	CTS
6.73 A (061)	4.0 EACH	REMOVING EXISTING PARKING METER POSTS	$ 2	.00	$ 8	.00
6.73 B (062)	4.0 EACH	FURNISHING AND INSTALLING PARKING METER POSTS	$ 5	.00	$ 20	.00
6.82 A (063)	4.0 S.F.	REMOVING EXISTING TRAFFIC AND STREET NAME SIGNS	$ 2	.00	$ 8	.00
6.82 B (064)	12.0 L.F.	REMOVING EXISTING TRAFFIC AND STREET NAME SIGN POSTS	$ 0	.50	$ 6	.00

02/14/2018
11:24AM
BID PAGES

NEW YORK CITY DEPARTMENT OF DESIGN AND CONSTRUCTION
DIVISION OF INFRASTRUCTURE - BUREAU OF DESIGN

Contract PIN 8502018SE0015C
Project ID SEQ200531

COL. 1 ITEM NUMBER (SEQUENCE NO.)	COL. 2 ENGINEER'S ESTIMATE OF QUANTITIES	COL. 3 CLASSIFICATIONS	COL. 4 UNIT PRICES (IN FIGURES) DOLLARS	CTS	COL. 5 EXTENDED AMOUNTS (IN FIGURES) DOLLARS	CTS
6.83 AA (065)	4.0 S.F.	FURNISHING NEW NON-REFLECTORIZED TRAFFIC SIGNS	$ 11	00	$ 44	00
6.83 AB (066)	12.0 L.F.	FURNISHING NEW TRAFFIC SIGN POSTS	$ 5	00	$ 60	00
6.83 AR (067)	4.0 S.F.	FURNISHING NEW REFLECTORIZED TRAFFIC SIGNS	$ 11	00	$ 44	00
6.87 (068)	534.0 EACH	PLASTIC BARRELS	$ 1	00	$ 534	00

NEW YORK CITY DEPARTMENT OF DESIGN AND CONSTRUCTION
DIVISION OF INFRASTRUCTURE - BUREAU OF DESIGN

Contract PIN 8502018SE0015C
Project ID SEQ200531

COL. 1 ITEM NUMBER (SEQUENCE NO.)	COL. 2 ENGINEER'S ESTIMATE OF QUANTITIES	COL. 3 CLASSIFICATIONS	COL. 4 UNIT PRICES (IN FIGURES) DOLLARS	CTS	COL. 5 EXTENDED AMOUNTS (IN FIGURES) DOLLARS	CTS
6.91 (069)	9,170.0 L.F.	REFLECTIVE CRACKING MEMBRANE (18" WIDE)	$ 0	50	$ 4,585	00
60.11R606 (070)	75.0 L.F.	FURNISHING AND DELIVERING 6-INCH DUCTILE IRON RESTRAINED JOINT PIPE (CLASS 56)	$ 75	00	$ 5,625	00
60.11R608 (071)	725.0 L.F.	FURNISHING AND DELIVERING 8-INCH DUCTILE IRON RESTRAINED JOINT PIPE (CLASS 56)	$ 175	00	$ 126,875	00
60.11R612 (072)	1,230.0 L.F.	FURNISHING AND DELIVERING 12-INCH DUCTILE IRON RESTRAINED JOINT PIPE (CLASS 56)	$ 225	00	$ 276,750	00

NEW YORK CITY DEPARTMENT OF DESIGN AND CONSTRUCTION
DIVISION OF INFRASTRUCTURE - BUREAU OF DESIGN

Contract PIN 8502018SE0015C
Project ID SEQ200531

COL. 1 ITEM NUMBER (SEQUENCE NO.)	COL. 2 ENGINEER'S ESTIMATE OF QUANTITIES	COL. 3 CLASSIFICATIONS	COL. 4 UNIT PRICES (IN FIGURES) DOLLARS	CTS	COL. 5 EXTENDED AMOUNTS (IN FIGURES) DOLLARS	CTS
60.12D06 (073)	85.0 L.F.	LAYING 6-INCH DUCTILE IRON PIPE AND FITTINGS	$ 55	.00	$ 4,675	.00
60.12D08 (074)	775.0 L.F.	LAYING 8-INCH DUCTILE IRON PIPE AND FITTINGS	$ 150	.00	$ 116,250	.00
60.12D12 (075)	1,307.0 L.F.	LAYING 12-INCH DUCTILE IRON PIPE AND FITTINGS	$ 225	.00	$ 294,075	.00
60.13M0A24 (076)	10.5 TONS	FURNISHING AND DELIVERING DUCTILE IRON MECHANICAL JOINT 24-INCH DIAMETER AND SMALLER FITTINGS, INCLUDING WEDGE TYPE RETAINER GLANDS	$ 200	.00	$ 2,100	.00

NEW YORK CITY DEPARTMENT OF DESIGN AND CONSTRUCTION
DIVISION OF INFRASTRUCTURE - BUREAU OF DESIGN

Contract PIN 8502018SE0015C
Project ID SEQ200531

COL. 1 ITEM NUMBER (SEQUENCE NO.)	COL. 2 ENGINEER'S ESTIMATE OF QUANTITIES	COL. 3 CLASSIFICATIONS	COL. 4 UNIT PRICES (IN FIGURES) DOLLARS	CTS	COL. 5 EXTENDED AMOUNTS (IN FIGURES) DOLLARS	CTS
60.18BJC20EL (077)	3.0 EACH	FURNISHING, DELIVERING AND INSTALLING BELL JOINT CLAMPS, COMPLETE FOR 20-INCH PIPE AND LESS	$ 25	00	$ 75	00
61.11DMM06 (078)	7.0 EACH	FURNISHING AND DELIVERING 6-INCH MECHANICAL JOINT DUCTILE IRON GATE VALVE COMPLETE WITH WEDGE TYPE RETAINER GLANDS	$ 2,500	00	$ 17,500	00
61.11DMM08 (079)	2.0 EACH	FURNISHING AND DELIVERING 8-INCH MECHANICAL JOINT DUCTILE IRON GATE VALVE COMPLETE WITH WEDGE TYPE RETAINER GLANDS	$ 3,500	00	$ 7,000	00
61.11DMM12 (080)	7.0 EACH	FURNISHING AND DELIVERING 12-INCH MECHANICAL JOINT DUCTILE IRON GATE VALVE COMPLETE WITH WEDGE TYPE RETAINER GLANDS	$ 5,500	00	$ 38,500	00

NEW YORK CITY DEPARTMENT OF DESIGN AND CONSTRUCTION
DIVISION OF INFRASTRUCTURE - BUREAU OF DESIGN

Contract PIN 8502018SE0015C
Project ID SEQ200531

COL. 1 ITEM NUMBER (SEQUENCE NO.)	COL. 2 ENGINEER'S ESTIMATE OF QUANTITIES	COL. 3 CLASSIFICATIONS	COL. 4 UNIT PRICES (IN FIGURES) DOLLARS	CTS	COL. 5 EXTENDED AMOUNTS (IN FIGURES) DOLLARS	CTS
61.11TWC03 (081)	1.0 EACH	FURNISHING AND DELIVERING 3-INCH WET CONNECTION TAPPING VALVE COMPLETE WITH WEDGE TYPE RETAINER GLANDS	$ 100	00	$ 100	00
61.12DMM06 (082)	7.0 EACH	SETTING 6-INCH MECHANICAL JOINT DUCTILE IRON GATE VALVE COMPLETE WITH WEDGE TYPE RETAINER GLANDS	$ 1,000	00	$ 7,000	00
61.12DMM08 (083)	2.0 EACH	SETTING 8-INCH MECHANICAL JOINT DUCTILE IRON GATE VALVE COMPLETE WITH WEDGE TYPE RETAINER GLANDS	$ 1,100	00	$ 2,200	00
61.12DMM12 (084)	7.0 EACH	SETTING 12-INCH MECHANICAL JOINT DUCTILE IRON GATE VALVE COMPLETE WITH WEDGE TYPE RETAINER GLANDS	$ 1,350	00	$ 9,450	00

02/14/2018
11:24AM
BID PAGES

NEW YORK CITY DEPARTMENT OF DESIGN AND CONSTRUCTION
DIVISION OF INFRASTRUCTURE - BUREAU OF DESIGN

Contract PIN 8502018SE0015C
Project ID SEQ200531

COL. 1 ITEM NUMBER (SEQUENCE NO.)	COL. 2 ENGINEER'S ESTIMATE OF QUANTITIES	COL. 3 CLASSIFICATIONS	COL. 4 UNIT PRICES (IN FIGURES) DOLLARS	CTS	COL. 5 EXTENDED AMOUNTS (IN FIGURES) DOLLARS	CTS
61.12TWC03 (085)	1.0 EACH	SETTING 3-INCH WET CONNECTION TAPPING VALVE COMPLETE WITH WEDGE TYPE RETAINER GLANDS	$ 200	.00	$ 200	.00
62.11SD (086)	7.0 EACH	FURNISHING AND DELIVERING HYDRANTS	$ 4,500	.00	$ 31,500	.00
62.12SG (087)	7.0 EACH	SETTING HYDRANTS COMPLETE WITH WEDGE TYPE RETAINER GLANDS	$ 5,500	.00	$ 38,500	.00
62.13RH (088)	5.0 EACH	REMOVING HYDRANTS	$ 750	.00	$ 3,750	.00

NEW YORK CITY DEPARTMENT OF DESIGN AND CONSTRUCTION
DIVISION OF INFRASTRUCTURE - BUREAU OF DESIGN

Contract PIN 8502018SE0015C
Project ID SEQ200531

COL. 1 ITEM NUMBER (SEQUENCE NO.)	COL. 2 ENGINEER'S ESTIMATE OF QUANTITIES	COL. 3 CLASSIFICATIONS	COL. 4 UNIT PRICES (IN FIGURES) DOLLARS	CTS	COL. 5 EXTENDED AMOUNTS (IN FIGURES) DOLLARS	CTS
62.14FS (089)	14.0 EACH	FURNISHING, DELIVERING AND INSTALLING HYDRANT FENDERS	$ 750	.00	$ 10,500	.00
63.11VC (090)	10.0 TONS	FURNISHING AND DELIVERING VARIOUS CASTINGS	$ 500	.00	$ 5,000	.00
64.11EL (091)	1.0 EACH	WITHDRAWING AND REPLACING HOUSE SERVICES USING 1-1/2-INCH OR LARGER SCREW TAPS	$ 100	.00	$ 100	.00
64.11ST (092)	25.0 EACH	WITHDRAWING AND REPLACING HOUSE SERVICES USING SMALLER THAN 1-1/2-INCH SCREW TAPS	$ 250	.00	$ 6,250	.00

NEW YORK CITY DEPARTMENT OF DESIGN AND CONSTRUCTION
DIVISION OF INFRASTRUCTURE - BUREAU OF DESIGN

Contract PIN 8502018SE0015C
Project ID SEQ200531

COL. 1 ITEM NUMBER (SEQUENCE NO.)	COL. 2 ENGINEER'S ESTIMATE OF QUANTITIES	COL. 3 CLASSIFICATIONS	COL. 4 UNIT PRICES (IN FIGURES) DOLLARS	CTS	COL. 5 EXTENDED AMOUNTS (IN FIGURES) DOLLARS	CTS
64.12COLT (093)	10.0 L.F.	CUTTING AND OFFSETTING HOUSE SERVICE WATER CONNECTIONS (LESS THAN 3-INCH DIAMETER)	$ 100	.00	$ 1,000	.00
64.12ESLT (094)	50.0 L.F.	EXTENDING HOUSE SERVICE WATER CONNECTIONS (LESS THAN 3-INCH DIAMETER)	$ 75	.00	$ 3,750	.00
64.13WC12 (095)	1.0 EACH	FURNISHING, DELIVERING AND INSTALLING WET CONNECTION SLEEVE ON 12-INCH WATER MAIN PIPE WITH VARIOUS OUTLETS	$ 250	.00	$ 250	.00
65.11BR (096)	100.0 LBS.	FURNISHING, DELIVERING AND INSTALLING BANDS, RODS, WASHERS, ETC., COMPLETE, FOR RESTRAINING JOINTS	$ 0	.01	$ 1	.00

02/14/2018
11:24AM
BID PAGES

NEW YORK CITY DEPARTMENT OF DESIGN AND CONSTRUCTION
DIVISION OF INFRASTRUCTURE - BUREAU OF DESIGN

Contract PIN 8502018SE0015C
Project ID SEQ200531

COL. 1 ITEM NUMBER (SEQUENCE NO.)	COL. 2 ENGINEER'S ESTIMATE OF QUANTITIES	COL. 3 CLASSIFICATIONS	COL. 4 UNIT PRICES (IN FIGURES) DOLLARS	CTS	COL. 5 EXTENDED AMOUNTS (IN FIGURES) DOLLARS	CTS
65.21PS (097)	980.0 L.F.	FURNISHING AND PLACING POLYETHYLENE SLEEVE **Unit price bid shall not be less than: $ 2.00**	$ 2	.00	$ 1,960	.00
65.31FF (098)	14,850.0 S.F.	FURNISHING, DELIVERING AND PLACING FILTER FABRIC **Unit price bid shall not be less than: $ 0.10**	$ 0	.10	$ 1,485	.00
65.71SG (099)	130.0 C.Y.	FURNISHING, DELIVERING AND PLACING SCREENED GRAVEL OR SCREENED BROKEN STONE BEDDING	$ 35	.00	$ 4,550	.00
7.01 MGF (100)	23.0 S.F.	METAL GRATE AND FRAME	$ 50	.00	$ 1,150	.00

NEW YORK CITY DEPARTMENT OF DESIGN AND CONSTRUCTION
DIVISION OF INFRASTRUCTURE - BUREAU OF DESIGN

Contract PIN 8502018SE0015C
Project ID SEQ200531

COL. 1 ITEM NUMBER (SEQUENCE NO.)	COL. 2 ENGINEER'S ESTIMATE OF QUANTITIES	COL. 3 CLASSIFICATIONS	COL. 4 UNIT PRICES (IN FIGURES) DOLLARS	CTS	COL. 5 EXTENDED AMOUNTS (IN FIGURES) DOLLARS	CTS
7.13 B (101)	21.0 MONTH	MAINTENANCE OF SITE **Unit price bid shall not be less than: $ 8,000.00**	$ 8,000	.00	$ 168,000	.00
7.36 (102)	2,899.0 L.F.	PEDESTRIAN STEEL BARRICADES	$ 6	.00	$ 17,394	.00
7.88 AA (103)	1.0 L.S.	RODENT INFESTATION SURVEY AND MONITORING **Unit price bid shall not be less than: $ 2,800.00**	$ 2,800	.00	$ 2,800	.00
7.88 AB (104)	83.0 EACH	RODENT BAIT STATIONS **Unit price bid shall not be less than: $ 60.00**	$ 60	.00	$ 4,980	.00

02/14/2018
11:24AM
BID PAGES

NEW YORK CITY DEPARTMENT OF DESIGN AND CONSTRUCTION
DIVISION OF INFRASTRUCTURE - BUREAU OF DESIGN

Contract PIN 8502018SE0015C
Project ID SEQ200531

COL. 1 ITEM NUMBER (SEQUENCE NO.)	COL. 2 ENGINEER'S ESTIMATE OF QUANTITIES	COL. 3 CLASSIFICATIONS	COL. 4 UNIT PRICES (IN FIGURES) DOLLARS	CTS	COL. 5 EXTENDED AMOUNTS (IN FIGURES) DOLLARS	CTS
7.88 AC (105)	83.0 EACH	BAITING OF RODENT BAIT STATIONS **Unit price bid shall not be less than: $ 9.50**	$ 9	50	$ 788	50
7.88 AD (106)	8.0 BLOCK	WATERBUG BAIT APPLICATIONS **Unit price bid shall not be less than: $ 65.00**	$ 65	00	$ 520	00
70.21DK (107)	100.0 S.Y.	DECKING	$ 100	00	$ 10,000	00
70.31FN (108)	9,350.0 L.F.	FENCING **Unit price bid shall not be less than: $ 1.00**	$ 1	00	$ 9,350	00

02/14/2018
11:24AM
BID PAGES

NEW YORK CITY DEPARTMENT OF DESIGN AND CONSTRUCTION
DIVISION OF INFRASTRUCTURE - BUREAU OF DESIGN

Contract PIN 8502018SE0015C
Project ID SEQ200531

COL. 1 ITEM NUMBER (SEQUENCE NO.)	COL. 2 ENGINEER'S ESTIMATE OF QUANTITIES	COL. 3 CLASSIFICATIONS	COL. 4 UNIT PRICES (IN FIGURES) DOLLARS	CTS	COL. 5 EXTENDED AMOUNTS (IN FIGURES) DOLLARS	CTS
70.51EO (109)	30.0 C.Y.	EXCAVATION OF BOULDERS IN OPEN CUT **Unit price bid shall not be less than: $ 75.00**	$ 75	.00	$ 2,250	.00
70.61RE (110)	25.0 C.Y.	ROCK EXCAVATION	$ 1	.00	$ 25	.00
70.71SB (111)	5.0 C.Y.	STONE BALLAST **Unit price bid shall not be less than: $ 15.00**	$ 15	.00	$ 75	.00
70.81CB (112)	1,792.0 C.Y.	CLEAN BACKFILL **Unit price bid shall not be less than: $ 15.00**	$ 15	.00	$ 26,880	.00

02/14/2018
11:24AM
BID PAGES

NEW YORK CITY DEPARTMENT OF DESIGN AND CONSTRUCTION
DIVISION OF INFRASTRUCTURE - BUREAU OF DESIGN

Contract PIN 8502018SE0015C
Project ID SEQ200531

COL. 1 ITEM NUMBER (SEQUENCE NO.)	COL. 2 ENGINEER'S ESTIMATE OF QUANTITIES	COL. 3 CLASSIFICATIONS	COL. 4 UNIT PRICES (IN FIGURES) DOLLARS	CTS	COL. 5 EXTENDED AMOUNTS (IN FIGURES) DOLLARS	CTS
70.91SW12 (113)	2,110.0 S.F.	FURNISHING AND PLACING SHEETING AND BRACING IN TRENCH FOR WATER MAIN PIPE 12-INCH IN DIAMETER AND LESS	$ 0	.01	$ 21	.10
73.11AB (114)	37.0 C.Y.	ADDITIONAL BRICK MASONRY Unit price bid shall not be less than: $ 62.50	$ 62	.50	$ 2,312	.50
73.21AC (115)	40.0 C.Y.	ADDITIONAL CONCRETE Unit price bid shall not be less than: $ 62.50	$ 62	.50	$ 2,500	.00
73.31AE0 (116)	200.0 C.Y.	ADDITIONAL EARTH EXCAVATION INCLUDING TEST PITS (ALL DEPTHS) Unit price bid shall not be less than: $ 20.00	$ 20	.00	4,000 ~~$ 2,540~~	.00 ~~.00~~ MM

REVISED BID PAGE

02/14/2018
11:24AM
BID PAGES

NEW YORK CITY DEPARTMENT OF DESIGN AND CONSTRUCTION
DIVISION OF INFRASTRUCTURE - BUREAU OF DESIGN

Contract PIN 8502018SE0015C
Project ID SEQ200531

COL. 1 ITEM NUMBER (SEQUENCE NO.)	COL. 2 ENGINEER'S ESTIMATE OF QUANTITIES	COL. 3 CLASSIFICATIONS	COL. 4 UNIT PRICES (IN FIGURES) DOLLARS	CTS	COL. 5 EXTENDED AMOUNTS (IN FIGURES) DOLLARS	CTS
70.91SW12 (113)	2,110.0 S.F.	FURNISHING AND PLACING SHEETING AND BRACING IN TRENCH FOR WATER MAIN PIPE 12-INCH IN DIAMETER AND LESS	$ 0	.01	$ 21	.10
73.11AB (114)	37.0 C.Y.	ADDITIONAL BRICK MASONRY **Unit price bid shall not be less than: $ 62.50**	$ 62	.50	$ 2,312	.50
73.21AC (115)	40.0 C.Y.	ADDITIONAL CONCRETE **Unit price bid shall not be less than: $ 62.50**	$ 62	.50	$ 2,500	.00
73.31AE0 (116)	200.0 C.Y.	ADDITIONAL EARTH EXCAVATION INCLUDING TEST PITS (ALL DEPTHS) **Unit price bid shall not be less than: $ 20.00**	$ 20	.00	$ 2,540	.00

NEW YORK CITY DEPARTMENT OF DESIGN AND CONSTRUCTION
DIVISION OF INFRASTRUCTURE - BUREAU OF DESIGN

Contract PIN 8502018SE0015C
Project ID SEQ200531

COL. 1 ITEM NUMBER (SEQUENCE NO.)	COL. 2 ENGINEER'S ESTIMATE OF QUANTITIES	COL. 3 CLASSIFICATIONS	COL. 4 UNIT PRICES (IN FIGURES) DOLLARS	CTS	COL. 5 EXTENDED AMOUNTS (IN FIGURES) DOLLARS	CTS
73.41AG (117)	5,420.0 C.Y.	ADDITIONAL SELECT GRANULAR BACKFILL **Unit price bid shall not be less than: $ 15.00**	$ 15	.00	$ 81,300	.00
73.51AS (118)	1,100.0 LBS.	ADDITIONAL STEEL REINFORCING BARS **Unit price bid shall not be less than: $ 1.00**	$ 1	.00	$ 1,100	.00
8.01 C1 (119)	3,500.0 TONS	HANDLING, TRANSPORTING AND DISPOSAL OF NON-HAZARDOUS CONTAMINATED SOIL	$ 10	.00	$ 35,000	.00
8.01 C2 (120)	22.0 SETS	SAMPLING AND TESTING OF CONTAMINATED/POTENTIALLY HAZARDOUS SOIL FOR DISPOSAL PURPOSES	$ 2500	.00	$ 55,000	.00

02/14/2018
11:24AM
BID PAGES

NEW YORK CITY DEPARTMENT OF DESIGN AND CONSTRUCTION
DIVISION OF INFRASTRUCTURE - BUREAU OF DESIGN

Contract PIN 8502018SE0015C
Project ID SEQ200531

COL. 1 ITEM NUMBER (SEQUENCE NO.)	COL. 2 ENGINEER'S ESTIMATE OF QUANTITIES	COL. 3 CLASSIFICATIONS	COL. 4 UNIT PRICES (IN FIGURES) DOLLARS	CTS	COL. 5 EXTENDED AMOUNTS (IN FIGURES) DOLLARS	CTS
8.01 H (121)	150.0 TONS	HANDLING, TRANSPORTING AND DISPOSAL OF HAZARDOUS SOIL	$ 15	.00	$ 2,250	.00
8.01 S (122)	1.0 L.S.	HEALTH AND SAFETY	$ 15,000	.00	$ 15,000	.00
8.01 W1 (123)	3.0 DAY	REMOVAL, TREATMENT, AND DISCHARGE/DISPOSAL OF CONTAMINATED WATER	$ 1	.00	$ 3	.00
8.01 W2 (124)	3.0 SETS	SAMPLING AND TESTING OF CONTAMINATED WATER	$ 1	.00	$ 3	.00

NEW YORK CITY DEPARTMENT OF DESIGN AND CONSTRUCTION
DIVISION OF INFRASTRUCTURE - BUREAU OF DESIGN

Contract PIN 8502018SE0015C
Project ID SEQ200531

COL. 1 ITEM NUMBER (SEQUENCE NO.)	COL. 2 ENGINEER'S ESTIMATE OF QUANTITIES	COL. 3 CLASSIFICATIONS	COL. 4 UNIT PRICES (IN FIGURES) DOLLARS	CTS	COL. 5 EXTENDED AMOUNTS (IN FIGURES) DOLLARS	CTS
8.02 A (125)	404.0 S.F.	SPECIAL CARE EXCAVATION AND RESTORATION FOR SIDEWALK WORK	$ 5	.00	$ 2,020	.00
8.02 B (126)	848.0 L.F.	SPECIAL CARE EXCAVATION AND RESTORATION FOR CURB WORK	$ 7	.00	$ 5,936	.00
8.20 (127)	93.7 S.Y.	JUTE MESH	$ 7	.00	$ 655	.00
9.30 (128)	1.0 L.S.	STORM WATER POLLUTION PREVENTION	$ 20,000	.00	$ 20,000	.00

NEW YORK CITY DEPARTMENT OF DESIGN AND CONSTRUCTION
DIVISION OF INFRASTRUCTURE - BUREAU OF DESIGN

Contract PIN 8502018SE0015C
Project ID SEQ200531

COL. 1 ITEM NUMBER (SEQUENCE NO.)	COL. 2 ENGINEER'S ESTIMATE OF QUANTITIES	COL. 3 CLASSIFICATIONS	COL. 4 UNIT PRICES (IN FIGURES) DOLLARS	CTS	COL. 5 EXTENDED AMOUNTS (IN FIGURES) DOLLARS	CTS
GI-2.06 (129)	153.0 L.F.	L-SHAPED EDGING	$ 10	.00	$ 1,530	.00
GI-2.07D (130)	90.8 C.Y.	3"-4" CLEAN OPEN GRADED STONE	$ 75	.00	$ 6,810	.00
GI-2.08 (131)	922.5 S.F.	HDPE BARRIER	$ 5	.00	$ 4,612	.50
GI-2.08 L (132)	81.3 S.F.	IMPERMEABLE LINER	$ 5	.00	$ 406	.50

NEW YORK CITY DEPARTMENT OF DESIGN AND CONSTRUCTION
DIVISION OF INFRASTRUCTURE - BUREAU OF DESIGN

Contract PIN 8502018SE0015C
Project ID SEQ200531

COL. 1 ITEM NUMBER (SEQUENCE NO.)	COL. 2 ENGINEER'S ESTIMATE OF QUANTITIES	COL. 3 CLASSIFICATIONS	COL. 4 UNIT PRICES (IN FIGURES) DOLLARS	CTS	COL. 5 EXTENDED AMOUNTS (IN FIGURES) DOLLARS	CTS
GI-2.09 DR (133)	4,742.0 S.Y.	GEOTEXTILE FABRIC FOR DRAINAGE	$ 1	.00	$ 4,742	.00
GI-2.10PC-B (134)	32.0 L.F.	STEEL TREE PIT GUARD - POWDER COATED TYPE B	$ 95	.00	$ 3,040	.00
GI-2.13A (135)	61.6 C.Y.	ENGINEERED SOIL AND SAND	$ 125	.00	$ 7,700	.00
GI-2.16 FPA (136)	20.0 L.F.	FULL PERFORATED HDPE PIPE (8" DIA.)	$ 15	.00	$ 300	.00

NEW YORK CITY DEPARTMENT OF DESIGN AND CONSTRUCTION
DIVISION OF INFRASTRUCTURE - BUREAU OF DESIGN

Contract PIN 8502018SE0015C
Project ID SEQ200531

COL. 1 ITEM NUMBER (SEQUENCE NO.)	COL. 2 ENGINEER'S ESTIMATE OF QUANTITIES	COL. 3 CLASSIFICATIONS	COL. 4 UNIT PRICES (IN FIGURES) DOLLARS	CTS	COL. 5 EXTENDED AMOUNTS (IN FIGURES) DOLLARS	CTS
GI-2.16 HPA (137)	20.0 L.F.	HALF PERFORATED HDPE PIPE (8" DIA.)	$ 15	00	$ 300	00
GI-2.16 SA (138)	3.0 L.F.	SOLID HDPE PIPE (8" DIA.)	$ 15	00	$ 45	00
GI-2.16P (139)	1.0 L.F.	PERFORATED HDPE PIPE (6" DIA.)	$ 14	00	$ 14	00
GI-2.16S (140)	1.0 L.F.	SOLID HDPE PIPE (6" DIA.)	$ 14	00	$ 14	00

02/14/2018
11:24AM
BID PAGES

NEW YORK CITY DEPARTMENT OF DESIGN AND CONSTRUCTION
DIVISION OF INFRASTRUCTURE - BUREAU OF DESIGN

Contract PIN 8502018SE0015C
Project ID SEQ200531

COL. 1 ITEM NUMBER (SEQUENCE NO.)	COL. 2 ENGINEER'S ESTIMATE OF QUANTITIES	COL. 3 CLASSIFICATIONS	COL. 4 UNIT PRICES (IN FIGURES) DOLLARS	CTS	COL. 5 EXTENDED AMOUNTS (IN FIGURES) DOLLARS	CTS
GI-2.17 A (141)	90.8 C.Y.	GABION (WITH CLEAN OPEN GRADED STONE)	$ 200	.00	$ 18,160	.00
GI-2.19 (142)	4.0 L.F.	HDPE STORM WATER CHAMBER	$ 50	.00	$ 200	.00
GI-4.02 (143)	843.0 C.Y.	EARTH EXCAVATION	$ 35	.00	$ 29,505	.00
GI-4.03 (144)	3.0 C.Y.	EXCAVATION OF BOULDERS IN OPEN CUT	$ 75	.00	$ 225	.00

NEW YORK CITY DEPARTMENT OF DESIGN AND CONSTRUCTION
DIVISION OF INFRASTRUCTURE - BUREAU OF DESIGN

Contract PIN 8502018SE0015C
Project ID SEQ200531

COL. 1 ITEM NUMBER (SEQUENCE NO.)	COL. 2 ENGINEER'S ESTIMATE OF QUANTITIES	COL. 3 CLASSIFICATIONS	COL. 4 UNIT PRICES (IN FIGURES) DOLLARS	CTS	COL. 5 EXTENDED AMOUNTS (IN FIGURES) DOLLARS	CTS
GI-4.06 A (145)	128.0 S.F.	REINFORCED CONCRETE APRON	$ 15	.00	$ 1,920	.00
GI-4.06 CG (146)	91.7 L.F.	REINFORCED CONCRETE GUTTER	$ 20	.00	$ 1,834	.00
GI-4.06 CO (147)	34.0 L.F.	CONCRETE WALKWAY AND FOOTER FOR HYDRAULICALLY CONNECTED GREEN INFRASTRUCTURE PRACTICES	$ 22	.00	$ 748	.00
GI-4.06 CS (148)	153.0 L.F.	CONCRETE STRIP	$ 20	.00	$ 3,060	.00

NEW YORK CITY DEPARTMENT OF DESIGN AND CONSTRUCTION
DIVISION OF INFRASTRUCTURE - BUREAU OF DESIGN

Contract PIN 8502018SE0015C
Project ID SEQ200531

COL. 1 ITEM NUMBER (SEQUENCE NO.)	COL. 2 ENGINEER'S ESTIMATE OF QUANTITIES	COL. 3 CLASSIFICATIONS	COL. 4 UNIT PRICES (IN FIGURES) DOLLARS	CTS	COL. 5 EXTENDED AMOUNTS (IN FIGURES) DOLLARS	CTS
GI-4.06 CU (149)	34.0 L.F.	REINFORCED CONCRETE CULVERT AND COVER	$ 65	.00	$ 2,210	.00
GI-4.06 SP (150)	27.3 L.F.	CONCRETE SEDIMENT PAD	$ 60	.00	$ 1,638	.00
GI-5.10 (151)	14.0 V.F.	STONE COLUMN	$ 115	.00	$ 1,610	.00
GI-5.21R (152)	289.0 L.F.	SAWCUTTING EXISTING ROADWAY PAVEMENT	$ 1	.00	$ 289	.00

NEW YORK CITY DEPARTMENT OF DESIGN AND CONSTRUCTION
DIVISION OF INFRASTRUCTURE - BUREAU OF DESIGN

Contract PIN 8502018SE0015C
Project ID SEQ200531

COL. 1 ITEM NUMBER (SEQUENCE NO.)	COL. 2 ENGINEER'S ESTIMATE OF QUANTITIES	COL. 3 CLASSIFICATIONS	COL. 4 UNIT PRICES (IN FIGURES) DOLLARS	CTS	COL. 5 EXTENDED AMOUNTS (IN FIGURES) DOLLARS	CTS
GI-5.21S (153)	352.0 L.F.	SAWCUTTING EXISTING SIDEWALK PAVEMENT	$ 1	.00	$ 352	.00
GI-5.35 (154)	15.0 L.F.	SLEEVE FOR UTILITY CROSSINGS	$ 2	.00	$ 30	.00
GM-11 (155)	3.0 C.Y.	HAND AND/OR PNEUMATIC EXCAVATION	$ 250	.00	$ 750	.00
JB 100.1(CE) (156)	7.0 EACH	UTILITIES CROSSING TRENCH FOR CATCH BASIN CHUTE CONNECTION AND/OR TEST PIT (TYPE .1) **Unit price bid shall not be less than: $ 361.00**	$ 361	.00	$ 2,527	.00

NEW YORK CITY DEPARTMENT OF DESIGN AND CONSTRUCTION
DIVISION OF INFRASTRUCTURE - BUREAU OF DESIGN

Contract PIN 8502018SE0015C
Project ID SEQ200531

COL. 1 ITEM NUMBER (SEQUENCE NO.)	COL. 2 ENGINEER'S ESTIMATE OF QUANTITIES	COL. 3 CLASSIFICATIONS	COL. 4 UNIT PRICES (IN FIGURES) DOLLARS	CTS	COL. 5 EXTENDED AMOUNTS (IN FIGURES) DOLLARS	CTS
JB 100.2(CE) (157)	3.0 EACH	UTILITIES CROSSING TRENCH FOR CATCH BASIN CHUTE CONNECTION AND/OR TEST PIT (TYPE .2) **Unit price bid shall not be less than: $ 676.00**	$ 676	.00	$ 2,028	.00
JB 101.1(CE) (158)	5.0 EACH	UTILITIES CROSSING TRENCH FOR SEWERS OVER 12" TO 24" DIAMETER (TYPE .1) **Unit price bid shall not be less than: $ 3,064.00**	$ 3,064	.00	$ 15,320	.00
JB 101.2(CE) (159)	5.0 EACH	UTILITIES CROSSING TRENCH FOR SEWERS OVER 12" TO 24" DIAMETER (TYPE .2) **Unit price bid shall not be less than: $ 3,832.00**	$ 3,832	.00	$ 19,160	.00
JB 104.1(CE) (160)	5.0 EACH	UTILITIES CROSSING TRANCH FOR SEWERS OVER 48" TO 54" DIAMETER (TYPE.1) **Unit price bid shall not be less than: $ 4,000.00**	$ 4,000	.00	$ 20,000	.00

02/14/2018
11:24AM
BID PAGES

NEW YORK CITY DEPARTMENT OF DESIGN AND CONSTRUCTION
DIVISION OF INFRASTRUCTURE - BUREAU OF DESIGN

Contract PIN 8502018SE0015C
Project ID SEQ200531

COL. 1 ITEM NUMBER (SEQUENCE NO.)	COL. 2 ENGINEER'S ESTIMATE OF QUANTITIES	COL. 3 CLASSIFICATIONS	COL. 4 UNIT PRICES (IN FIGURES) DOLLARS	CTS	COL. 5 EXTENDED AMOUNTS (IN FIGURES) DOLLARS	CTS
JB 104.2(CE) (161)	1.0 EACH	UTILITIES CROSSING TRENCH FOR SEWERS OVER 48" TO 54" DIAMETER (TYPE.2) **Unit price bid shall not be less than: $ 4,600.00**	$ 4,600	.00	$ 4,600	.00
JB 104.2(VERZ) (162)	1.0 EACH	UTILITIES CROSSING TRENCH FOR SEWERS OVER 48" TO 54" DIAMETER (TYPE .2) **Unit price bid shall not be less than: $ 4,037.00**	$ 4,037	.00	$ 4,037	.00
JB 105.1(CE) (163)	7.0 EACH	UTILITIES CROSSING TRENCH FOR SEWERS OVER 54" TO 60" DIAMETER (TYPE .1) **Unit price bid shall not be less than: $ 4,276.00**	$ 4,276	.00	$ 29,932	.00
JB 105.2(CE) (164)	1.0 EACH	UTILITIES CROSSING TRENCH FOR SEWERS OVER 54" TO 60" DIAMETER (TYPE .2) **Unit price bid shall not be less than: $ 5,058.00**	$ 5,058	.00	$ 5,058	.00

NEW YORK CITY DEPARTMENT OF DESIGN AND CONSTRUCTION
DIVISION OF INFRASTRUCTURE - BUREAU OF DESIGN

Contract PIN 8502018SE0015C
Project ID SEQ200531

COL. 1 ITEM NUMBER (SEQUENCE NO.)	COL. 2 ENGINEER'S ESTIMATE OF QUANTITIES	COL. 3 CLASSIFICATIONS	COL. 4 UNIT PRICES (IN FIGURES) DOLLARS	CTS	COL. 5 EXTENDED AMOUNTS (IN FIGURES) DOLLARS	CTS
JB 108.1(CE) (165)	19.0 EACH	UTILITIES CROSSING TRENCH FOR WATER MAIN UP TO AND INCLUDING 12" DIAMETER (TYPE .1) **Unit price bid shall not be less than: $ 497.00**	$ 497	.00	$ 9,443	.00
JB 108.2(CE) (166)	7.0 EACH	UTILITIES CROSSING TRENCH FOR WATER MAIN UP TO AND INCLUDING 12" DIAMETER (TYPE .2) **Unit price bid shall not be less than: $ 1,550.00**	$ 1,550	.00	$ 10,850	.00
JB 108.2(VERZ) (167)	1.0 EACH	UTILITIES CROSSING TRENCH FOR WATER MAIN UP TO AND INCLUDING 12" DIAMETER (TYPE .2) **Unit price bid shall not be less than: $ 1,345.00**	$ 1,345	.00	$ 1,345	.00
JB 200(CE) (168)	51.0 L.F.	EXTRA DEPTH EXCAVATION OF CATCH BASIN CHUTE CONNECTION PIPES **Unit price bid shall not be less than: $ 122.00**	$ 122	.00	$ 6,222	.00

NEW YORK CITY DEPARTMENT OF DESIGN AND CONSTRUCTION
DIVISION OF INFRASTRUCTURE - BUREAU OF DESIGN

Contract PIN 8502018SE0015C
Project ID SEQ200531

COL. 1 ITEM NUMBER (SEQUENCE NO.)	COL. 2 ENGINEER'S ESTIMATE OF QUANTITIES	COL. 3 CLASSIFICATIONS	COL. 4 UNIT PRICES (IN FIGURES) DOLLARS	CTS	COL. 5 EXTENDED AMOUNTS (IN FIGURES) DOLLARS	CTS
JB 225(CE) (169)	8.0 EACH	INSTALLATION AND REMOVAL OF CATCH BASINS WITH UTILITY INTERFERENCES **Unit price bid shall not be less than: $ 5,176.00**	$ 5,176	00	$ 41,408	00
JB 225(VERZ) (170)	2.0 EACH	INSTALLATION AND REMOVAL OF CATCH BASINS WITH UTILITY INTERFERENCES **Unit price bid shall not be less than: $ 2,925.00**	$ 2,925	00	$ 5,850	00
JB 227(CE) (171)	1.0 EACH	REMOVAL OF CATCH BASINS WITH UTILITY INTERFERENCES **Unit price bid shall not be less than: $ 1,945.00**	$ 1,945	00	$ 1,945	00
JB 300(CE) (172)	134.0 C.Y.	SPECIAL CARE EXCAVATION AND BACKFILLING **Unit price bid shall not be less than: $ 235.00**	$ 235	00	$ 31,490	00

02/14/2018
11:24AM
BID PAGES

NEW YORK CITY DEPARTMENT OF DESIGN AND CONSTRUCTION
DIVISION OF INFRASTRUCTURE - BUREAU OF DESIGN

Contract PIN 8502018SE0015C
Project ID SEQ200531

COL. 1 ITEM NUMBER (SEQUENCE NO.)	COL. 2 ENGINEER'S ESTIMATE OF QUANTITIES	COL. 3 CLASSIFICATIONS	COL. 4 UNIT PRICES (IN FIGURES) DOLLARS	CTS	COL. 5 EXTENDED AMOUNTS (IN FIGURES) DOLLARS	CTS
JB 300(VERZ) (173)	10.0 C.Y.	SPECIAL CARE EXCAVATION AND BACKFILLING	$ 235	00	$ 2,350	00
JB 303(CE) (174)	83.0 C.Y.	FURNISH, DELIVER AND INSTALL TYPE 3/8 CLEAN SAND BACKFILL **Unit price bid shall not be less than: $ 39.00**	$ 39	00	$ 3,237	00
JB 330E.2(CE) (175)	8.0 L.F.	SUPPORT AND PROTECTION OF ELECTRIC AND GAS FACILITIES DURING EXCAVATION OF CITY TRENCH WHEN FACILITIES LIE WITHIN TRENCH LIMITS (TYPE .2) **Unit price bid shall not be less than: $ 30.00**	$ 30	00	$ 240	00
JB 350 T/TW(VERZ) (176)	1.0 L.S.	OVERHEAD ACCOMMODATION, PROTECTION OF OVERHEAD FACILITIES, POLES AND APPURTENANCES.	25,000 ~~50,000~~	00 ~~00~~	25,000 ~~50,000~~	00 ~~00~~

02/14/2018
11:24AM
BID PAGES

NEW YORK CITY DEPARTMENT OF DESIGN AND CONSTRUCTION
DIVISION OF INFRASTRUCTURE - BUREAU OF DESIGN

Contract PIN 8502018SE0015C
Project ID SEQ200531

COL. 1 ITEM NUMBER (SEQUENCE NO.)	COL. 2 ENGINEER'S ESTIMATE OF QUANTITIES	COL. 3 CLASSIFICATIONS	COL. 4 UNIT PRICES (IN FIGURES) DOLLARS	CTS	COL. 5 EXTENDED AMOUNTS (IN FIGURES) DOLLARS	CTS
JB 350(CE) (177)	1.0 L.S.	OVERHEAD ACCOMMODATION, PROTECTION OF OH FACILITIES & APPURTENANCES **Unit price bid shall not be less than: $ 3,900.00**	50,000 MM ~~75,000~~	00 ~~00~~	50,000 MM ~~75,000~~	00 ~~00~~
JB 350TWC (178)	1.0 L.S.	OVERHEAD ACCOMMODATION, PROTECTION OF OVERHEAD FACILITIES, POLES & APPURTENANCES **Unit price bid shall not be less than: $ 9,308.00**	50,000	00	50,000	00
JB 351(CE) (179)	2.0 EACH	INSTALL AND REMOVE "A" FRAME ON UTILITY POLES **Unit price bid shall not be less than: $ 1,187.00**	1,187	00	2,374	00
JB 400 (180)	50.0 C.Y.	TEST PITS FOR UTILITY FACILITIES **Unit price bid shall not be less than: $ 200.00**	200	00	10,000	00

02/14/2018
11:24AM
BID PAGES

NEW YORK CITY DEPARTMENT OF DESIGN AND CONSTRUCTION
DIVISION OF INFRASTRUCTURE - BUREAU OF DESIGN

Contract PIN 85020188E0015C
Project ID SEQ200531

COL. 1 ITEM NUMBER (SEQUENCE NO.)	COL. 2 ENGINEER'S ESTIMATE OF QUANTITIES	COL. 3 CLASSIFICATIONS	COL. 4 UNIT PRICES (IN FIGURES) DOLLARS	CTS	COL. 5 EXTENDED AMOUNTS (IN FIGURES) DOLLARS	CTS
JB 400 (VERZ) (181)	5.0 C.Y.	TEST PITS FOR UTILITY FACILITIES Unit price bid shall not be less than: $ 218.00	$ 218	00	$ 1,090	00
JB 401 (CE) (182)	22.0 C.Y.	TRENCH EXCAVATION FOR ADJUSTMENT OF UTILITY FACILITIES Unit price bid shall not be less than: $ 242.00	$ 242	00	5,324 ~~$ 5,342~~	00 ~~00~~ MM
JB 401 (VERZ) (183)	22.0 C.Y.	TRENCH EXCAVATION FOR ADJUSTMENT OF UTILITY FACILITIES Unit price bid shall not be less than: $ 228.00	$ 228	00	$ 5,016	00
JB 402.2 (CE) (184)	40.0 L.F.	EXISTING NON-CONCRETE ENCASED CONDUITS PLACED IN FINAL POSITION WITHOUT CONCRETE ENCASEMENT Unit price bid shall not be less than: $ 49.00	$ 49	00	$ 1,960	00

REVISED BID PAGE

NEW YORK CITY DEPARTMENT OF DESIGN AND CONSTRUCTION
DIVISION OF INFRASTRUCTURE - BUREAU OF DESIGN

Contract PIN 8502018SE0015C
Project ID SEQ200531

COL. 1 ITEM NUMBER (SEQUENCE NO.)	COL. 2 ENGINEER'S ESTIMATE OF QUANTITIES	COL. 3 CLASSIFICATIONS	COL. 4 UNIT PRICES (IN FIGURES) DOLLARS	CTS	COL. 5 EXTENDED AMOUNTS (IN FIGURES) DOLLARS	CTS
JB 400 (VERZ) (181)	5.0 C.Y.	TEST PITS FOR UTILITY FACILITIES **Unit price bid shall not be less than: $ 218.00**	$ 218	.00	$ 1,090	.00
JB 401 (CE) (182)	22.0 C.Y.	TRENCH EXCAVATION FOR ADJUSTMENT OF UTILITY FACILITIES **Unit price bid shall not be less than: $ 242.00**	$ 242	.00	$ 5,342	.00
JB 401 (VERZ) (183)	22.0 C.Y.	TRENCH EXCAVATION FOR ADJUSTMENT OF UTILITY FACILITIES **Unit price bid shall not be less than: $ 228.00**	$ 228	.00	$ 5,016	.00
JB 402.2 (CE) (184)	40.0 L.F.	EXISTING NON-CONCRETE ENCASED CONDUITS PLACED IN FINAL POSITION WITHOUT CONCRETE ENCASEMENT **Unit price bid shall not be less than: $ 49.00**	$ 49	.00	$ 1,960	.00

NEW YORK CITY DEPARTMENT OF DESIGN AND CONSTRUCTION
DIVISION OF INFRASTRUCTURE - BUREAU OF DESIGN

Contract PIN 8502018SE0015C
Project ID SEQ200531

COL. 1 ITEM NUMBER (SEQUENCE NO.)	COL. 2 ENGINEER'S ESTIMATE OF QUANTITIES	COL. 3 CLASSIFICATIONS	COL. 4 UNIT PRICES (IN FIGURES) DOLLARS	CTS	COL. 5 EXTENDED AMOUNTS (IN FIGURES) DOLLARS	CTS
JB 402T.2A(VERZ) (185)	34.0 L.F.	EXISTING OCCUPIED NON-CONRETE ENCASED TELECOMMUNICATION CONDUITS PLACED IN FINAL POSITION WITH CONCRETE ENCASEMENT **Unit price bid shall not be less than: $ 44.00**	$ 44	.00	$ 1,496	.00
JB 402T.V2A(VERZ) (186)	170.0 L.F.	EXISTING VACANT NON-CONCRETE ENCASED TELECOMMUNICATION CONDUITS PLACED IN FINAL POSITION WITH CONCRETE ENCASEMENT **Unit price bid shall not be less than: $ 26.00**	$ 26	.00	$ 4,420	.00
JB 450.1(CE) (187)	1.0 CREW/HR	CONSTRUCTION FIELD SUPPORT - SURVEY CREW (TYPE .1) **Unit price bid shall not be less than: $ 325.00**	$ 500	.00	$ 500	.00
JB 450.2(CE) (188)	20.0 CREW/HR	CONSTRUCTION FIELD SUPPORT - SMALL SIZE CREW (TYPE .2) **Unit price bid shall not be less than: $ 350.00**	$ 550	.00	$ 11,000	.00

02/14/2018
11:24AM
BID PAGES

NEW YORK CITY DEPARTMENT OF DESIGN AND CONSTRUCTION
DIVISION OF INFRASTRUCTURE - BUREAU OF DESIGN

Contract PIN 8502018SE0015C
Project ID SEQ200531

COL. 1 ITEM NUMBER (SEQUENCE NO.)	COL. 2 ENGINEER'S ESTIMATE OF QUANTITIES	COL. 3 CLASSIFICATIONS	COL. 4 UNIT PRICES (IN FIGURES) DOLLARS	CTS	COL. 5 EXTENDED AMOUNTS (IN FIGURES) DOLLARS	CTS
JB 450.3(CE) (189)	28.0 CREW/HR	CONSTRUCTION FIELD SUPPORT - MEDIUM SIZE CREW (TYPE .3) **Unit price bid shall not be less than: $ 925.00**	$ 1,200	.00	$ 33,600	.00
JB 500(CE) (190)	2,564.0 L.F.	REMOVAL OF ABANDONED UTILITY CONDUITS (NON-CONCRETE ENCASED) **Unit price bid shall not be less than: $ 3.00**	$ 3	.00	$ 7,692	.00
JB 501(CE) (191)	12.0 C.Y.	REMOVAL OF ABANDONED MASONRY FOR UTILITY FACILITIES **Unit price bid shall not be less than: $ 304.00**	$ 304	.00	$ 3,648	.00
JB 636 EE(VERZ) (192)	1.0 EACH	ADJUSTMENT OF UTILITY HARDWARE (34" TO UNDER 41" WIDTH) **Unit price bid shall not be less than: $ 490.00**	$ 490	.00	$ 490	.00

NEW YORK CITY DEPARTMENT OF DESIGN AND CONSTRUCTION
DIVISION OF INFRASTRUCTURE - BUREAU OF DESIGN

Contract PIN 8502018SE0015C
Project ID SEQ200531

COL. 1 ITEM NUMBER (SEQUENCE NO.)	COL. 2 ENGINEER'S ESTIMATE OF QUANTITIES	COL. 3 CLASSIFICATIONS	COL. 4 UNIT PRICES (IN FIGURES) DOLLARS	CTS	COL. 5 EXTENDED AMOUNTS (IN FIGURES) DOLLARS	CTS
JB 636 MD(CE) (193)	6.0 EACH	MODIFICATION OF WORK METHODS TO ACCOMMODATE UTILITY HARDWARE (30" TO UNDER 34" WIDTH) **Unit price bid shall not be less than: $ 75.00**	$ 75	.00	$ 450	.00
JB 636ED(CE) (194)	3.0 EACH	PRIVATELY OWNED UTILITY STRUCTURE HARDWARE ADJUSTED (30" TO UNDER 34" WIDTH) **Unit price bid shall not be less than: $ 796.00**	$ 796	.00	$ 2,388	.00
JB 700(CE) (195)	127.0 C.Y.	SPECIAL MODIFICATION OF WORK METHODS TO ACCOMMODATE/PROTECT UNDERGROUND FACILITIES WITH LIMITED COVER **Unit price bid shall not be less than: $ 47.00**	$ 47	.00	$ 5,969	.00
JB 710.1(CE) (196)	138.0 L.F.	REMOVAL OF ABANDONED UTILITY STEEL/CAST IRON/ PLASTIC PIPES, UP TO AND INCLUDING 12" DIAMETER PIPE **Unit price bid shall not be less than: $ 13.00**	$ 13	.00	$ 1,794	.00

02/14/2018
11:24AM
BID PAGES

NEW YORK CITY DEPARTMENT OF DESIGN AND CONSTRUCTION
DIVISION OF INFRASTRUCTURE - BUREAU OF DESIGN

Contract PIN 8502018SE0015C
Project ID SEQ200531

COL. 1 ITEM NUMBER (SEQUENCE NO.)	COL. 2 ENGINEER'S ESTIMATE OF QUANTITIES	COL. 3 CLASSIFICATIONS	COL. 4 UNIT PRICES (IN FIGURES) DOLLARS	CTS	COL. 5 EXTENDED AMOUNTS (IN FIGURES) DOLLARS	CTS
JB 802A(CE) (197)	50.0 S.F.	SPECIAL CARE EXCAVATION AND RESOTRATION FOR SIDEWALK WORK **Unit price bid shall not be less than: $ 3.00**	$ ~~150~~ 3	~~00~~ 00	$ 150	00
JB 802B(CE) (198)	10.0 L.F.	SPECIAL CARE EXCAVATION AND RESOTRATION FOR CURB WORK **Unit price bid shall not be less than: $ 10.00**	$ 10	00	$ 100	00
JB 900 (TW) (199)	1.0 F.S.	EXTRA UTILITY WORK COSTS ALLOWANCE PRICE BID SHALL BE FOR THE FIXED SUM OF $ 1,396.00	$ 1,396	00	$ 1,396	00
JB 900(CE) (200)	1.0 F.S.	EXTRA UTILITY WORK COSTS ALLOWANCE PRICE BID SHALL BE FOR THE FIXED SUM OF $ 70,546.00 **Unit price bid shall not be less than: $ 70,546.00**	$ 70,546	00	$ 70,546	00

NEW YORK CITY DEPARTMENT OF DESIGN AND CONSTRUCTION
DIVISION OF INFRASTRUCTURE - BUREAU OF DESIGN

Contract PIN 8502018SE0015C
Project ID SEQ200531

COL. 1 ITEM NUMBER (SEQUENCE NO.)	COL. 2 ENGINEER'S ESTIMATE OF QUANTITIES	COL. 3 CLASSIFICATIONS	COL. 4 UNIT PRICES (IN FIGURES) DOLLARS	CTS	COL. 5 EXTENDED AMOUNTS (IN FIGURES) DOLLARS	CTS
JB 900 (VERZ) (201)	1.0 F.S.	EXTRA UTILITY WORK COSTS ALLOWANCE PRICE BID SHALL BE FOR THE FIXED SUM OF $ 10,000.00 **Unit price bid shall not be less than: $ 10,000.00**	$ 10,000	00	$ 10,000	00
P-1 (202)	14.0 SETS	PHOTO DOCUMENTATION	$ 18	00	$ 252	00
PM-01 (203)	5.0 EACH	PLANT MAJOR TREES (2.5" TO 3" CALIPER)	$ 1,100	00	$ 5,500	00
PM-03 (204)	5.0 EACH	PLANT FLOWERING AND ORNAMENTAL TREES	$ 1,100	00	$ 5,500	00

02/14/2018
11:24AM
BID PAGES

NEW YORK CITY DEPARTMENT OF DESIGN AND CONSTRUCTION
DIVISION OF INFRASTRUCTURE - BUREAU OF DESIGN

Contract PIN 8502018SE0015C
Project ID SEQ200531

COL. 1 ITEM NUMBER (SEQUENCE NO.)	COL. 2 ENGINEER'S ESTIMATE OF QUANTITIES	COL. 3 CLASSIFICATIONS	COL. 4 UNIT PRICES (IN FIGURES) DOLLARS	CTS	COL. 5 EXTENDED AMOUNTS (IN FIGURES) DOLLARS	CTS
PM-09 (205)	84.0 EACH	MEDIUM EVERGREEN SHRUBS - CLASS B	$ 55	.00	$ 4,620	.00
PM-17 (206)	446.0 EACH	PERENNIALS, #2 can	$ 16	.00	$ 7,136	.00
PM-21 (207)	38.0 EACH	GRASSES, #2 can	$ 17	.00	$ 646	.00
PM-24 (208)	266.0 EACH	GROUND COVERS - #1 can	$ 17	.00	$ 4,522	.00

02/14/2018
11:24AM
BID PAGES

NEW YORK CITY DEPARTMENT OF DESIGN AND CONSTRUCTION
DIVISION OF INFRASTRUCTURE - BUREAU OF DESIGN

Contract PIN 8502018SE0015C
Project ID SEQ200531

COL. 1 ITEM NUMBER (SEQUENCE NO.)	COL. 2 ENGINEER'S ESTIMATE OF QUANTITIES	COL. 3 CLASSIFICATIONS	COL. 4 UNIT PRICES (IN FIGURES) DOLLARS	CTS	COL. 5 EXTENDED AMOUNTS (IN FIGURES) DOLLARS	CTS
UTL-6.01.1 (209)	4.0 EACH	GAS MAIN CROSSING SEWER UP TO 24" IN DIAMETER (S6.01) **Unit price bid shall not be less than: $ 1,040.00**	$ 1,040	.00	$ 4,160	.00
UTL-6.01.5 (210)	3.0 EACH	GAS MAIN CROSSING SEWER 60" IN DIAMETER (S6.01) **Unit price bid shall not be less than: $ 2,340.00**	$ 2,340	.00	$ 7,020	.00
UTL-6.01.8 (211)	20.0 EACH	GAS SERVICES CROSSING TRENCHES AND/OR EXCAVATIONS (S6.01) **Unit price bid shall not be less than: $ 465.00**	$ 465	.00	$ 9,300	.00
UTL-6.03 (212)	2,044.0 L.F.	REMOVAL OF ABANDONED GAS FACILITIES. ALL SIZES. (S6.03) **Unit price bid shall not be less than: $ 15.00**	$ 15	.00	$ 30,660	.00

NEW YORK CITY DEPARTMENT OF DESIGN AND CONSTRUCTION
DIVISION OF INFRASTRUCTURE - BUREAU OF DESIGN

Contract PIN 8502018SE0015C
Project ID SEQ200531

COL. 1 ITEM NUMBER (SEQUENCE NO.)	COL. 2 ENGINEER'S ESTIMATE OF QUANTITIES	COL. 3 CLASSIFICATIONS	COL. 4 UNIT PRICES (IN FIGURES) DOLLARS	CTS	COL. 5 EXTENDED AMOUNTS (IN FIGURES) DOLLARS	CTS
UTL-6.03.1A (213)	621.0 L.F.	REMOVAL OF ABANDONED GAS FACILITIES WITH POSSIBLE COAL TAR WRAP. ALL SIZES. (FOR CON EDISON WORK ONLY) (S6.03) **Unit price bid shall not be less than: $ 25.00**	$ 25	00	$ 15,525	00
UTL-6.04 (214)	9.0 EACH	ADJUST HARDWARE TO GRADE USING SPACER RINGS/ADAPTORS. (STREET REPAVING.) (S6.04) **Unit price bid shall not be less than: $ 35.00**	$ 35	00	$ 315	00
UTL-6.05 (215)	3.0 EACH	ADJUST HARDWARE TO GRADE BY RESETTING. (ROAD RECONSTRUCTION.) (S6.05) **Unit price bid shall not be less than: $ 65.00**	$ 65	00	$ 195	00
UTL-6.06 (216)	400.0 C.Y.	SPECIAL CARE EXCAVATION AND BACKFILLING (S6.06) **Unit price bid shall not be less than: $ 180.00**	$ 180	00	$ 72,000	00

02/14/2018
11:24AM
BID PAGES

NEW YORK CITY DEPARTMENT OF DESIGN AND CONSTRUCTION
DIVISION OF INFRASTRUCTURE - BUREAU OF DESIGN

Contract PIN 8502018SE0015C
Project ID SEQ200531

COL. 1 ITEM NUMBER (SEQUENCE NO.)	COL. 2 ENGINEER'S ESTIMATE OF QUANTITIES	COL. 3 CLASSIFICATIONS	COL. 4 UNIT PRICES (IN FIGURES) DOLLARS	CTS	COL. 5 EXTENDED AMOUNTS (IN FIGURES) DOLLARS	CTS
UTL-6.07 (217)	50.0 C.Y.	TEST PITS FOR GAS FACILITIES (S6.07) **Unit price bid shall not be less than: $ 100.00**	$ 100	00	$ 5,000	00
UTL-GCS-2WS (218)	1.0 F.S.	GAS INTERFERENCES AND ACCOMMODATIONS PRICE BID SHALL BE FOR THE FIXED SUM OF $ 50,000.00	$ 50,000	00	$ 50,000	00

02/14/2018
11:24AM
BID PAGES

NEW YORK CITY DEPARTMENT OF DESIGN AND CONSTRUCTION
DIVISION OF INFRASTRUCTURE - BUREAU OF DESIGN

Contract PIN 8502018SE0015C
Project ID SEQ200531

COL. 1 ITEM NUMBER (SEQUENCE NO.)	COL. 2 ENGINEER'S ESTIMATE OF QUANTITIES	COL. 3 CLASSIFICATIONS	COL. 4 UNIT PRICES (IN FIGURES) DOLLARS	CTS	COL. 5 EXTENDED AMOUNTS (IN FIGURES) DOLLARS	CTS
					8,656,475	35
		SUB-TOTAL:			~~$8,655,015.35~~ MM	
6.39 A (219)	1.0 LUMP SUM	MOBILIZATION PRICE BID SHALL NOT EXCEED 4% OF THE ABOVE SUB-TOTAL PRICE.			$340,000	00
					8,996,475	35
		TOTAL BID PRICE:			~~$8,995,015.35~~ MM	

PLEASE BE SURE A LEGIBLE BID IS ENTERED FOR EACH ITEM.

THE BIDDER SHALL INSERT THE TOTAL BID PRICE IN THE BID FORM ON PAGE C-4 OF THIS BID BOOKLET.

Revised Bid Page

NEW YORK CITY DEPARTMENT OF DESIGN AND CONSTRUCTION
DIVISION OF INFRASTRUCTURE - BUREAU OF DESIGN

Contract PIN 8502018SE0015C
Project ID SEQ200531

COL. 1 ITEM NUMBER (SEQUENCE NO.)	COL. 2 ENGINEER'S ESTIMATE OF QUANTITIES	COL. 3 CLASSIFICATIONS	COL. 4 UNIT PRICES (IN FIGURES) DOLLARS	CTS	COL. 5 EXTENDED AMOUNTS (IN FIGURES) DOLLARS	CTS
		SUB-TOTAL:			$8,655,015	35
6.39 A (219)	1.0 LUMP SUM	MOBILIZATION PRICE BID SHALL NOT EXCEED 4% OF THE ABOVE SUB-TOTAL PRICE.			$340,000	00
		TOTAL BID PRICE:			$8,995,015	35

PLEASE BE SURE A LEGIBLE BID IS ENTERED FOR EACH ITEM.

THE BIDDER SHALL INSERT THE TOTAL BID PRICE IN THE BID FORM ON PAGE C-4 OF THIS BID BOOKLET.

BID FORM
THE CITY OF NEW YORK
DEPARTMENT OF DESIGN AND CONSTRUCTION
DIVISION OF INFRASTRUCTURE

BID FOR FURNISHING ALL LABOR AND MATERIAL NECESSARY AND REQUIRED FOR:

PROJECT ID: SEQ200531

STORM SEWER EXTENSIONS INCLUDING WATER MAIN WORK IN 239TH STREET BETWEEN 87TH AVENUE AND 88TH AVENUE ETC.

Together With All Work Incidental Thereto
BOROUGH OF QUEENS
CITY OF NEW YORK

Name of Bidder: Inter LaPeruta JV

Date of Bid Opening: March 5, 2018

Bidder is: (Check one, whichever applies) Individual ( ) Partnership (X) Corporation ( )

Place of Business of Bidder: 35 Colonial Place, Mount Vernon, NY 10550

Bidder's Telephone Number: 914.863.0000 Fax Number: 914.863.0135

Bidder's E-Mail Address: mmutino@intercontractingcorp.com

Residence of Bidder (If Individual): _____

If Bidder is a Partnership, fill in the following blanks:

Names of Partners	Residence of Partners
Inter Contracting Corp.	
LaPeruta Construction Corp.	

If Bidder is a Corporation, fill in the following blanks:
Organized under the laws of the State of _____

Name and Home Address of President: _____

Name and Home Address of Secretary: _____

Name and Home Address of Treasurer: _____

BID FORM

The above-named Bidder affirms and declares:

1. The said bidder is of lawful age and the only one interested in this bid; and no person, firm or corporation other than hereinbefore named has any interest in this bid, or in the Contract proposed to be taken.

2. By submission of this bid, each bidder and each person signing on behalf of any bidder certifies, and in the case of a joint bid each party thereto certifies as to its own organization, under penalty of perjury, that to the best of its knowledge and belief: (1) the prices in this bid have been arrived at independently without collusion, consultation, communication or agreement, for the purpose of restricting competition, as to any matter relating to such prices with any other bidder or with any competitor; (2) unless otherwise required by law, the prices quoted in this bid have not been knowingly disclosed by the bidder and will not knowingly be disclosed by the bidder prior to opening, directly or indirectly, to any other bidder or to any competitor; and (3) No attempt has been made or will be made by the bidder to induce any other person, partnership or corporation to submit or not to submit a bid for the purpose of restricting competition.

3. No councilman or other officer or employee or person whose salary is payable in whole or in part from the City Treasury is directly or indirectly interested in this bid, or in the supplies, materials, equipment, work or labor to which it relates, or in any of the profits thereof.

4. The bidder is not in arrears to the City of New York upon debt or contract or taxes, and is not a defaulter, as surety or otherwise, upon any obligation of the City of New York, and has not been declared not responsible, or disqualified, by any agency of the City of New York or State of New York, nor is there any proceeding pending relating to the responsibility or qualification of the bidder to receive public contracts except as set forth on the Affirmation included as page C-6 of this Bid Booklet.

The bidder hereby affirms that it has paid all applicable City income, excise and other taxes for all years it has conducted business activities in New York City.

5. The bidder, as an individual, or as a member, partner, director or officer of the bidder, if the same be a firm, partnership or corporation, executes this document expressly warranting and representing that should this bid be accepted by the City and the Contract awarded to him, he and his subcontractors engaged in the performance: (1) will comply with the provisions of Section 6-108 of the Administrative Code of the City of New York and the non-discrimination provisions of Section 220a of the New York State Labor Law, as more expressly and in detail set forth in the Agreement; (2) will comply with Section 6-109 of the Administrative Code of the City of New York in relation to minimum wages and other stipulations as more expressly and in detail set forth in the Agreement; (3) have complied with the provisions of the aforesaid laws since their respective effective dates, and (4) will post notices to be furnished by the City, setting forth the requirements of the aforesaid laws in prominent and conspicuous places in each and every plant, factory, building and structure where employees engaged in the performance of the Contract can readily view it, and will continue to keep such notices posted until the supplies, materials and equipment, or work labor and services required to be furnished or rendered by the Contractor have been finally accepted by the City. In the event of any breach or violation of the foregoing, the Contractor may be subject to damages, liquidated or otherwise, cancellation of the Contract and suspension as a bidder for a period of three years. (The words, "the bidder", "he", "his", and "him" where used herein shall mean the individual bidder, firm, partnership or corporation executing this bid).

6. Compliance Report

The bidder, as an individual, or as a member, partner, director, or officer of the bidder, if the same be a firm, partnership, or corporation, (1) represents that his attention has been specifically drawn to Executive Order No. 50, dated, April 25, 1980, on Equal Employment Compliance of the contract, and (2) warrants that he will comply with the provisions of Executive Order No. 50. The Employment Report must be submitted as part of the bid.

The bidder, as an individual, or as a member, partner, director, or officer of the bidder, if the same be a firm, partnership, or corporation, executes this document expressly warranting that he will comply with: (1) the provision of the contract on providing records, Chapter 8.

7. By submission of this bid, the bidder certifies that it now has and will continue to have the financial capability to fully perform the work required for this contract. Any award of this contract will be made in reliance upon such certification. Upon request therefor, the bidder will submit written verification of such financial capability in a form that is acceptable to the department.

8. In accordance with Section 165 of the State Finance Law, the bidder agrees that tropical hardwoods, as defined in Section 165 of the State Finance Law, shall not be utilized in the performance of this Contract, except as the same are permitted by the foregoing provision of law.

9. The bidder has visited and examined the site of the work and has carefully examined the Contract in the form approved by the Corporation Counsel, and will execute the Contract and perform all its items, covenants and conditions, and will provide, furnish and deliver all the work, materials, supplies, tools and appliances for all labor and materials necessary or required for the hereinafter named work, all in strict conformity with the Contract, for the prices set forth in the Bid Schedule:

10. M/WBE UTILIZATION PLAN: By signing its bid, the bidder agrees to the Vendor Certification and Required Affirmations set forth below, unless a full waiver of the Participation Goals is granted. The Vendor Certification and Required Affirmations will be deemed to satisfy the requirement to complete Section V of Part II of Schedule B: M/WBE Utilization Plan.

Section V: Vendor Certification and Required Affirmations:

I hereby:

1) acknowledge my understanding of the M/WBE participation requirements as set forth in this Contract and the pertinent provisions of Section 6-129 of the Administrative Code of the City of New York and the rules promulgated thereunder;
2) affirm that the information supplied in support of the M/WBE Utilization Plan is true and correct;
3) agree, if awarded this Contract, to comply with the M/WBE participation requirements of this Contract, the pertinent provisions of Section 6-129, and the rules promulgated thereunder, all of which shall be deemed to be material terms of this Contract;
4) agree and affirm that it is a material term of this Contract that the Vendor will award the total dollar value of the M/WBE Participation Goals to certified MBEs and/or WBEs, unless a full waiver is obtained or such goals are modified by the Agency; and
5) agree and affirm, if awarded this Contract, to make all reasonable, good faith efforts to meet the M/WBE Participation Goals, or If a partial waiver is obtained or such goals are modified by the Agency, to meet the modified Participation Goals by soliciting and obtaining the participation of certified MBE and/or WBE firms.

BID FORM

PROJECT ID. : SEQ200531

TOTAL BID PRICE: In the space provided below, the Bidder shall indicate its Total Bid Price in figures. Such Total Bid Price is set forth on the final page of the Bid Schedule.

TOTAL BID PRICE:
(a/k/a BID PROPOSAL)

$ ~~8,995,015.35~~ 8,996,475.35 MJ 3/6/18

BIDDER'S SIGNATURE AND AFFIDAVIT

Bidder: Inter LaPenta JV

By: _____
(Signature of Partner or corporate officer)

Attest:
(Corporate Seal)

Secretary of Corporate Bidder

Affidavit on the following page should be subscribed
and sworn to before a Notary Public

REVISED BID PAGE

BID FORM

PROJECT ID. : SEQ200531

TOTAL BID PRICE: In the space provided below, the Bidder shall indicate its Total Bid Price in figures. Such Total Bid Price is set forth on the final page of the Bid Schedule.

TOTAL BID PRICE:
(a/k/a BID PROPOSAL)

$ 8,995,015.35

MJ 3/6/18

BIDDER'S SIGNATURE AND AFFIDAVIT

Bidder: Inter LaPenta JV

By: _____
(Signature of Partner or corporate officer)

_____

Attest:
(Corporate Seal)

Secretary of Corporate Bidder

Affidavit on the following page should be subscribed
and sworn to before a Notary Public

BID FORM (TO BE NOTARIZED)

AFFIDAVIT WHERE BIDDER IS AN INDIVIDUAL

STATE OF NEW YORK, COUNTY OF_____ ss:

_____ being duly sworn says:

I am the person described in and who executed the foregoing bid, and the several matters therein stated are in all respects true.

_____

(Signature of the person who signed the Bid)

Subscribed and sworn to before me this

_____ day of_____, _____

_____

Notary Public

AFFIDAVIT WHERE BIDDER IS A PARTNERSHIP

STATE OF NEW YORK, COUNTY OF Queens ss:

Michael Mutino being duly sworn says:

I am a member of Inter Lafenita JV the firm described in and which executed the foregoing bid. I subscribed the name of the firm thereto on behalf of the firm, and the several matters therein stated are in all respects true.

_____

(Signature of Partner who signed the Bid)

Subscribed and sworn to before me this

7th day of March, 2018

Elizabeth L

Notary Public

Elizabeth Leichnam
Notary Public, State of New York
No. 01LE6004261
Qualified in Queens County
Commission Expires June 7, 2018

AFFIDAVIT WHERE BIDDER IS A CORPORATION

STATE OF NEW YORK, COUNTY OF_____ ss:

_____ being duly sworn says:

I am the _____ of the above named corporation whose name is subscribed to and which executed the foregoing bid. I reside at _____.

I have knowledge of the several matters therein stated, and they are in all respects true.

_____

(Signature of Corporate Officer who signed the Bid)

Subscribed and sworn to before me this

_____ day of_____, _____

_____

Notary Public

AFFIRMATION

PROJECT ID. SEQ200531

The undersigned bidder affirms and declares that said bidder is not in arrears to the City of New York upon debt, contract or taxes and is not a defaulter, as surety or otherwise, upon obligation to the City of New York, and has not been declared not responsible, or disqualified, by any agency of the City of New York, nor is there any proceeding pending relating to the responsibility or qualification of the bidder to receive public contracts except: None

(If none, the bidder shall insert the word "None" in the space provided above.)

Full Name of Bidder: Inter LaPeruta JV
Address: 35 Colonial Place
City Mount Vernon State NY Zip Code 10550

CHECK ONE BOX AND INCLUDE APPROPRIATE NUMBER:

/__/ A - Individual or Sole Proprietorship*
SOCIAL SECURITY NUMBER

/X/ B - Partnership, Joint Venture or other unincorporated organization
EMPLOYER IDENTIFICATION NUMBER
47-1391529

/__/ C- Corporation
EMPLOYER IDENTIFICATION NUMBER

By: _____
Signature

Title: Partner

If a corporation, place seal here

This affirmation must be signed by an officer or duly authorized representative.

*Under the Federal Privacy Act the furnishing of Social Security Numbers by bidders on City contracts is voluntary. Failure to provide a Social Security Number will not result in a bidder's disqualification. Social Security Numbers will be used to identify bidders, proposers or vendors to ensure their compliance with laws, to assist the City in enforcement of laws, as well as to provide the City a means of identifying of businesses which seek City contracts.

(NO TEXT ON THIS PAGE)

BID BOND 1
FORM OF BID BOND

KNOW ALL MEN BY THESE PRESENTS. That we, _____

Inter LaPeruta JV

35 Colonial Place, Mount Vernon, NY 10550

hereinafter referred to as the "Principal", and _____

Western Surety Company

P. O. Box 5077 , Sioux Falls, SD 57117-5077

hereinafter referred to as the "Surety" are held and firmly bound to THE CITY OF NEW YORK, hereinafter referred to as the "CITY", or to its successors and assigns in the penal sum of

Ten Percent of Amount Bid

($ 10%), Dollars lawful money of the United States, for the payment of which said sum of money well and truly to be made, we, and each of us, bind ourselves, our heirs, executors, administrators, successors and assigns, jointly and severally, firmly by these presents.

Whereas, the Principal is about to submit (or has submitted) to the City the accompanying proposal, hereby made a part hereof, to enter into a contract in writing for Project ID: SEQ200531. Storm Sewer Extensions and Water Main Work, Capital Project WM-1, in 239th Street Between 87th Avenue and 88th Avenue in 87th Avenue Between Cross Island Parkway and 239th Street in Cross Island Parkway West Service Road Between 90th Avenue and 87th Avenue, Borough of Queens, City of New York

NOW, THEREFORE, the conditions of this obligation are such that if the Principal shall not withdraw said Proposal without the consent of the City for a period of forty-five (45) days after the opening of bids and in the event of acceptance of the Principal's Proposal by the City, if the Principal shall:

(a) Within ten (10) days after notification by the City, execute in quadruplicate and deliver to the City all the executed counterparts of the Contract in the form set forth in the Contract Documents, in accordance with the proposal as accepted, and

(b) Furnish a performance bond and separate payment bond, as may be required by the City, for the faithful performance and proper fulfullment of such Contract, which bonds shall be satisfactory in all respects to the City and shall be executed by good and sufficient sureties, and

(c) In all respects perform the agreement created by the acceptance of said Proposal as provided in the Information for Bidders, bound herewith and made a part hereof, or if the City shall reject the aforesaid Proposal, then this obligation shall be null and void; otherwise to remain in full force and effect.

BID BOND 2

In the event that the Proposal of the Principal shall be accepted and the Contract be awarded to him the Surety hereunder agrees subject only to the payment by the Principal of the premium therefore, if requested by the City, to write the aforementioned performance and payment bonds in the form set forth in the Contract Documents.

It is expressly understood and agreed that the liability of the Surety for any and all claims hereunder shall in no event exceed the penal amount of this obligation as herein stated.

There shall be no liability under this bond if, in the event of the acceptance of the Principal's Proposal by the City, either a performance bond or payment bond, or both, shall not be required by the City on or before the 30th day after the date on which the City signs the Contract.

The surety, for the value received, hereby stipulates and agrees that the obligations of the Surety and its bond shall in no way be impaired or affected by any postponements of the date upon which the City will receive or open bids, or by any extensions of time within which the City may accept the Principal's Proposal, or by any waiver by the City of any of the requirements of the Information for Bidders, and the Surety hereby waives notice of any such postponements, extensions, or waivers.

IN WITNESS WHEREOF, the Principal and the Surety have hereunto set their hands and seals and such of them as are corporations have caused their corporate seals to be hereto affixed and these presents to be signed by their proper officers the 26th day of February, 2018.

(Seal) Inter LaPeruta JV (L.S.)

Principal

By: _____

(Seal) Western Surety Company

Surety

By: _____

Dana Granice Attorney-in-Fact

WESTERN SURETY COMPANY CORPORATE SEAL SOUTH DAKOTA

BID BOND 3

ACKNOWLEDGEMENT OF PRINCIPAL, IF A CORPORATION

State of _____ County of _____ ss:
On this _____ day of _____, _____, before me personally came _____ to me known, who, being by me duly sworn, did depose and say that he resides at _____
that he is the _____ of _____
the corporation described in and which executed the foregoing instrument; that he knows the seal of said corporation; that one of the seals affixed to said instrument is such seal; that it was so affixed by order of the directors of said corporation, and that he signed his name thereto by like order.

_____
Notary Public

ACKNOWLEDGEMENT OF PRINCIPAL, IF A PARTNERSHIP

State of _____ County of _____ ss:
On this _____ day of _____, _____, before me personally appeared _____ to me known and known to me to be one of the members of the firm of _____ described in and who executed the foregoing instrument, and he acknowledged to me that he executed the same as and for the act and deed of said firm.

_____
Notary Public

ACKNOWLEDGEMENT OF PRINCIPAL, IF AN INDIVIDUAL

State of _____ County of _____ ss:
On this _____ day of _____, _____, before me personally appeared _____ to me known and known to me to be the person described in and who executed the foregoing instrument and acknowledged that he executed the same.

_____
Notary Public

AFFIX ACKNOWLEDGEMENTS AND JUSTIFICATION OF SURETIES

Acknowledgment by Principal

State of New York }
County of Queens }

On this 7th day of March 20 18, personally appeared before me Michael Mutino member of the firm/Joint Venture of Inter LaPeruta JV to me known and known to me to be the individual described in and who executed the foregoing instrument and he acknowledged to me that he executed the same for an on behalf of said firm/Joint Venture.

Sworn before me this 7th day of March 20 18

Elizabeth Leichnam
Notary Public, State of New York
No. 01LE6004261
Qualified in Queens County
Commission Expires June 7, 20 18

Elizabeth L

Notary Public

Western Surety Company

POWER OF ATTORNEY APPOINTING INDIVIDUAL ATTORNEY-IN-FACT

Know All Men By These Presents, That WESTERN SURETY COMPANY, a South Dakota corporation, is a duly organized and existing corporation having its principal office in the City of Sioux Falls, and State of South Dakota, and that it does by virtue of the signature and seal herein affixed hereby make, constitute and appoint

Gerard S Macholz, Camille Maitland, Rita Sagistano, Robert T Pearson, Thomas Bean, Susan Lupski, George O Brewster, Michelle Wannamaker, Desiree Cardlin, Colette R Chisholm, Vincent A Walsh, Dana Granice, Individually

of Uniondale, NY, its true and lawful Attorney(s)-in-Fact with full power and authority hereby conferred to sign, seal and execute for and on its behalf bonds, undertakings and other obligatory instruments of similar nature

- In Unlimited Amounts -

and to bind it thereby as fully and to the same extent as if such instruments were signed by a duly authorized officer of the corporation and all the acts of said Attorney, pursuant to the authority hereby given, are hereby ratified and confirmed.

This Power of Attorney is made and executed pursuant to and by authority of the By-Law printed on the reverse hereof, duly adopted, as indicated, by the shareholders of the corporation.

In Witness Whereof, WESTERN SURETY COMPANY has caused these presents to be signed by its Vice President and its corporate seal to be hereto affixed on this 18th day of January, 2018.

WESTERN SURETY COMPANY

Paul T. Bruflat, Vice President

State of South Dakota
County of Minnehaha } ss

On this 18th day of January, 2018, before me personally came Paul T. Bruflat, to me known, who, being by me duly sworn, did depose and say: that he resides in the City of Sioux Falls, State of South Dakota; that he is the Vice President of WESTERN SURETY COMPANY described in and which executed the above instrument; that he knows the seal of said corporation; that the seal affixed to the said instrument is such corporate seal; that it was so affixed pursuant to authority given by the Board of Directors of said corporation and that he signed his name thereto pursuant to like authority, and acknowledges same to be the act and deed of said corporation.

My commission expires
June 23, 2021

J. MOHR
NOTARY PUBLIC
SOUTH DAKOTA

J. Mohr, Notary Public

CERTIFICATE

I, L. Nelson, Assistant Secretary of WESTERN SURETY COMPANY do hereby certify that the Power of Attorney hereinabove set forth is still in force, and further certify that the By-Law of the corporation printed on the reverse hereof is still in force. In testimony whereof I have hereunto subscribed my name and affixed the seal of the said corporation this _____ day of FEB 2 6 2018, _____.

WESTERN SURETY COMPANY

L. Nelson, Assistant Secretary

Form F4280-7-2012

Go to www.cnasurety.com > Owner / Obligee Services > Validate Bond Coverage. if you want to verify bond authenticity

Authorizing By-Law

ADOPTED BY THE SHAREHOLDERS OF WESTERN SURETY COMPANY

This Power of Attorney is made and executed pursuant to and by authority of the following By-Law duly adopted by the shareholders of the Company.

Section 7. All bonds, policies, undertakings, Powers of Attorney, or other obligations of the corporation shall be executed in the corporate name of the Company by the President, Secretary, and Assistant Secretary, Treasurer, or any Vice President, or by such other officers as the Board of Directors may authorize. The President, any Vice President, Secretary, any Assistant Secretary, or the Treasurer may appoint Attorneys in Fact or agents who shall have authority to issue bonds, policies, or undertakings in the name of the Company. The corporate seal is not necessary for the validity of any bonds, policies, undertakings, Powers of Attorney or other obligations of the corporation. The signature of any such officer and the corporate seal may be printed by facsimile.

ACKNOWLEDGEMENT OF SURETY COMPANY

STATE OF NEW YORK

COUNTY OF NASSAU

On this February 26, 2018 before me personally came Dana Granice to me known, who, being by me duly sworn, did depose and say; that he/she resides in Suffolk County, State of New York, that he/she is the Attorney-In-Fact of the Western Surety Company the corporation described in which executed the above instrument; that he/she knows the seal of said corporation; that the seal affixed to said instrument is such corporate seal; that is was so affixed by the Board of Directors of said corporation; and that he/she signed his/her name thereto by like order; and the affiant did further depose and say that the Superintendent of Insurance of the State of New York, has, pursuant to Section 1111 of the Insurance Law of the State of New York, issued to Western Surety Company (Surety) his/her certificate of qualification evidencing the qualification of said Company and its sufficiency under any law of the State of New York as surety and guarantor, and the propriety of accepting and approving it as such; and that such Certificate has not been revoked.

GRACE ACKERSON
Notary Public-State of New York
No. 01AC6111590
Qualified in Nassau County
Commission Expires 6/14/2020

Notary Public

WESTERN SURETY COMPANY
Sioux Falls, South Dakota
Statement of Net Admitted Assets and Liabilities
December 31, 2016

ASSETS

Bonds	$ 1,852,079,625
Common stocks	22,190,065
Cash, cash equivalents, and short-term investments	40,860,171
Investment income due and accrued	21,267,722
Premiums and considerations	31,990,790
Amounts recoverable from reinsurers	919,390
Current federal and foreign income taxes recoverable from CNA Financial Corporation	3,116,372
Net deferred tax asset	16,401,098
Receivable from parent, subsidiaries, and affiliates	9,896,461
Other assets	62,275
Total Assets	$ 1,998,783,969

LIABILITIES AND SURPLUS

Losses		$ 229,857,438
Loss adjustment expense		68,982,110
Commissions payable, contingent commissions and other similar charges		7,779,628
Other expenses (excluding taxes, license and fees)		1,109,441
Taxes, License and fees (excluding federal and foreign income taxes)		2,678,781
Unearned premiums		213,765,490
Advance premiums		5,316,156
Ceded reinsurance premiums payable		1,730,621
Amounts withheld or retained by company for account of others		10,021,647
Provision for reinsurance		1,671,808
Payable to parent, subsidiaries and affiliates		12,103
Other liabilities		3,447,756
Total Liabilities		$ 546,372,979
Surplus Account:		
Common stock	$ 4,000,000	
Gross paid in and contributed surplus	280,071,837	
Unassigned funds	1,168,339,153	
Surplus as regards policyholders		$ 1,452,410,990
Total Liabilities and Capital		$ 1,998,783,969

I, Troy Wray, Assistant Vice President of Western Surety Company hereby certify that the above is an accurate representation of the financial statement of the Company dated December 31, 2016, as filed with the various Insurance Departments and is a true and correct statement of the condition of Western Surety Company as of that date.

SEAL SOUTH DAKOTA

Western Surety Company

By _____
Assistant Vice President

Subscribed and sworn to me this 10th day of March, 2017.

My commission expires:

YOLANDA JIMENEZ
OFFICIAL SEAL
Notary Public, State of Illinois
My Commission Expires
September 24, 2017

_____
Notary Public

M/WBE PROGRAM

M/WBE UTILIZATION PLAN

M/WBE Program Requirements: The requirements for the M/WBE Program are set forth on the following pages of this Bid Booklet, in the section entitled "Notice to All Prospective Contractors".

Schedule B: M/WBE Utilization Plan: Schedule B: M/WBE Utilization Plan for this Contract is set forth in this Bid Booklet on the pages following the section entitled "Notice to All Prospective Contractors". The M/WBE Utilization Plan (Part I) indicates whether Participation Goals have been established for this Contract. If Participation Goals have been established for this Contract, the bidder must submit an M/WBE Utilization Plan (Part II) with its bid.

Waiver: The bidder may seek a full or partial pre-award waiver of the Participation Goals in accordance with the "Notice to All Prospective Contractors" (See Part A, Section 10). The bidder's request for a waiver must be submitted at least seven (7) calendar days prior to the bid date. Waiver requests submitted after the deadline will not be considered. The form for requesting a waiver of the Participation Goals is set forth in the M/WBE Utilization Plan (Part III).

Rejection of the Bid: The bidder must complete Schedule B: M/WBE Utilization Plan (Part II) set forth in this Bid Booklet on the pages following the section entitled "Notice to All Prospective Contractors". A Schedule B submitted by the bidder which does not include the Vendor Certification and Required Affirmations (See Section V of Part II) will be deemed to be non-responsive, unless a full waiver of the Participation Goals is granted (Schedule B, Part III). In the event that the City determines that the bidder has submitted a Schedule B where the Vendor Certification and Required Affirmations are completed but other aspects of the Schedule B are not complete, or contain a copy or computation error that is at odds with the Vendor Certification and Required Affirmations, the bidder will be notified by the Agency and will be given four (4) calendar days from receipt of notification to cure the specified deficiencies and return a completed Schedule B to the Agency. Failure to do so will result in a determination that the Bid is non-responsive. Receipt of notification is defined as the date notice is emailed or faxed (if the bidder has provided an email address or fax number), or no later than five (5) calendar days from the date of mailing or upon delivery, if delivered.

Impact on LBE Requirements: If Participation Goals have been established for the participation of M/WBEs, the contractor is not required to comply with the Locally Based Enterprise Program ("LBE"). The LBE Program is set forth in Article 67 of the Contract.

NOTICE TO ALL PROSPECTIVE CONTRACTORS

PARTICIPATION BY MINORITY-OWNED AND WOMEN-OWNED BUSINESS ENTERPRISES IN CITY PROCUREMENT

ARTICLE I. M/WBE PROGRAM

Local Law No. 129 of 2005 added and Local Law 1 of 2013 amended Section 6-129 of the Administrative Code of the City of New York (hereinafter "Section 6-129"). Section 6-129 establishes the program for participation in City procurement ("M/WBE Program") by minority- owned business enterprises ("MBEs") and women-owned business enterprises ("WBEs"), certified in accordance with Section 1304 of the New York City Charter. As stated in Section 6-129, the intent of the program is to address the impact of discrimination on the City's procurement process, and to promote the public interest in avoiding fraud and favoritism in the procurement process, increasing competition for City business, and lowering contract costs. The contract provisions contained herein are pursuant to Section 6-129, and the rules of the Department of Small Business Services ("DSBS") promulgated thereunder.

If this Contract is subject to the M/WBE Program established by Section 6-129, the specific requirements of MBE and/or WBE participation for this Contract are set forth in Schedule B of the Contract (entitled the "M/WBE Utilization Plan"), and are detailed below. The Contractor must comply with all applicable MBE and WBE requirements for this Contract.

All provisions of Section 6-129 are hereby incorporated in the Contract by reference and all terms used herein that are not defined herein shall have the meanings given such terms in Section 6-129. Article I, Part A, below, sets forth provisions related to the participation goals for construction, standard and professional services contracts. Article I, Part B, below, sets forth miscellaneous provisions related to the M/WBE Program.

PART A

PARTICIPATION GOALS FOR CONSTRUCTION, STANDARD AND PROFESSIONAL SERVICES CONTRACTS OR TASK ORDERS

1. The **MBE and/or WBE Participation Goals** established for this Contract or Task Orders issued pursuant to this Contract, (**"Participation Goals"**), as applicable, are set forth on Schedule B, Part I to this Contract (see Page 1, line 1 Total Participation Goals) or will be set forth on Schedule B, Part I to Task Orders issued pursuant to this Contract, as applicable.

The **Participation Goals** represent a percentage of the total dollar value of the Contract or Task Order, as applicable, that may be achieved by awarding subcontracts to firms certified with New York City Department of Small Business Services as MBEs and/or WBEs, and/or by crediting the participation of prime contractors and/or qualified joint ventures as provided in Section 3 below, unless the goals have been waived or modified by Agency in accordance with Section 6-129 and Part A, Sections 10 and 11 below, respectively.

2. If **Participation Goals** have been established for this Contract or Task Orders issued pursuant to this Contract, Contractor agrees or shall agree as a material term of the Contract that Contractor shall be subject to the **Participation Goals**, unless the goals are waived or modified by Agency in accordance with Section 6-129 and Part A, Sections 10 and 11 below, respectively.

3. If **Participation Goals** have been established for this Contract or Task Order issued pursuant to this Contract, a Contractor that is an MBE and/or WBE shall be permitted to count its own participation toward fulfillment of the relevant **Participation Goal**, provided that in accordance with Section 6-129 the value of Contractor's participation shall be determined by subtracting from the total value of the Contract or Task Order, as applicable, any amounts that the Contractor pays to direct subcontractors (as defined in Section 6-129(c)(13)), and provided further that a Contractor that is certified as both an MBE and a WBE may count its own participation either toward the goal for MBEs or the goal for WBEs, but not both.

A Contractor that is a qualified joint venture (as defined in Section 6-129(c)(30)) shall be permitted to count a percentage of its own participation toward fulfillment of the relevant **Participation Goal**. In accordance with Section 6-129, the value of Contractor's participation shall be determined by subtracting from the total value of the Contract or Task Order, as applicable, any amounts that Contractor pays to direct subcontractors, and then multiplying the remainder by the percentage to be applied to total profit to determine the amount to which an MBE or WBE is entitled pursuant to the joint venture agreement, provided that where a participant in a joint venture is certified as both an MBE and a WBE, such amount shall be counted either toward the goal for MBEs or the goal for WBEs, but not both.

4. A. If **Participation Goals** have been established for this Contract, a prospective contractor shall be required to submit with its bid or proposal, as applicable, a completed Schedule B, M/WBE Utilization Plan, Part II (see Pages 2-4) indicating: (a) whether the contractor is an MBE or WBE, or qualified joint venture; (b) the percentage of work it intends to award to direct subcontractors; and (c) in cases where the contractor intends to award direct subcontracts, a description of the type and dollar value of work designated for participation by MBEs and/or WBEs, and the time frames in which such work is scheduled to begin and end. In the event that this M/WBE Utilization Plan indicates that the bidder or proposer, as applicable, does not intend to meet the **Participation Goals**, the bid or proposal, as applicable, shall be deemed non-responsive, unless Agency has granted the bidder or proposer, as applicable, a pre- award waiver of the Participation Goals in accordance with Section 6-129 and Part A, Section 10 below.

B. (i) If this Contract is for a master services agreement or other requirements type contract that will result in the issuance of Task Orders that will be individually registered ("Master Services Agreement") and is subject to M/WBE **Participation Goals**, a prospective contractor shall be required to submit with its bid or proposal, as applicable, a completed Schedule B, M/WBE Participation Requirements for Master Services Agreements That Will Require Individually Registered Task Orders, Part II (page 2) indicating the prospective contractor's certification and required affirmations to make all reasonable good faith efforts to meet participation goals established on each individual Task Order issued pursuant to this Contract, or if a partial waiver is obtained or such goals are modified by the Agency, to meet the modified **Participation Goals** by soliciting and obtaining the participation of certified MBE and/or WBE firms. In the event that the Schedule B indicates that the bidder or proposer, as applicable, does not intend to meet the **Participation Goals** that may be established on Task Orders issued pursuant to this Contract, the bid or proposal, as applicable, shall be deemed nonresponsive.

(ii) **Participation Goals** on a Master Services Agreement will be established for individual Task Orders issued after the Master Services Agreement is awarded. If **Participation Goals** have been established on a Task Order, a contractor shall be required to submit a Schedule B – M/WBE Utilization Plan For Independently Registered Task Orders That Are Issued Pursuant to Master Services Agreements, Part II (see Pages 2-4) indicating: (a) whether the contractor is an MBE or WBE, or qualified joint venture; (b) the percentage of work it intends to award to direct subcontractors; and (c) in cases where the contractor intends to award direct subcontracts, a description of the type and dollar value of work designated for participation by MBEs and/or WBEs, and the time frames in which such work is scheduled to begin and end. The contractor must engage in good faith efforts to meet the **Participation Goals** as established for the Task Order unless Agency has granted the contractor a pre-award waiver of the Participation Goals in accordance with Section 6-129 and Part A, Section 10 below.

C. THE BIDDER/PROPOSER MUST COMPLETE THE SCHEDULE B INCLUDED HEREIN (SCHEDULE B, PART II). A SCHEDULE B SUBMITTED BY THE BIDDER/PROPOSER WHICH DOES NOT INCLUDE THE VENDOR CERTIFICATION AND REQUIRED AFFIRMATIONS (SEE SECTION V OF PART II) WILL BE DEEMED TO BE NON-RESPONSIVE, UNLESS A FULL WAIVER OF THE PARTICIPATION GOALS IS GRANTED (SCHEDULE B, PART III). IN THE EVENT THAT THE CITY DETERMINES THAT THE BIDDER/PROPOSER HAS SUBMITTED A SCHEDULE B WHERE THE VENDOR CERTIFICATION AND REQUIRED AFFIRMATIONS ARE COMPLETED BUT OTHER ASPECTS OF THE SCHEDULE B ARE NOT COMPLETE, OR CONTAIN A COPY OR COMPUTATION ERROR THAT IS AT ODDS WITH THE VENDOR CERTIFICATION AND AFFIRMATIONS, THE BIDDER/PROPOSER WILL BE NOTIFIED BY THE AGENCY AND WILL BE GIVEN FOUR (4) CALENDAR DAYS FROM RECEIPT OF NOTIFICATION TO CURE THE SPECIFIED DEFICIENCIES AND RETURN A COMPLETED SCHEDULE B TO THE AGENCY. FAILURE TO DO

SO WILL RESULT IN A DETERMINATION THAT THE BID/PROPOSAL IS NON-RESPONSIVE. RECEIPT OF NOTIFICATION IS DEFINED AS THE DATE NOTICE IS E-MAILED OR FAXED (IF THE BIDDER/PROPOSER HAS PROVIDED AN E-MAIL ADDRESS OR FAX NUMBER), OR NO LATER THAN FIVE (5) CALENDAR DAYS FROM THE DATE OF MAILING OR UPON DELIVERY, IF DELIVERED.

5. Where an **M/WBE** Utilization Plan has been submitted, the Contractor shall, within 30 days of issuance by Agency of a notice to proceed, submit a list of proposed persons or entities to which it intends to award subcontracts within the subsequent 12 months. In the case of multiyear contracts, such list shall also be submitted every year thereafter. The Agency may also require the Contractor to report periodically about the contracts awarded by its direct subcontractors to indirect subcontractors (as defined in Section 6-129(c)(22)). **PLEASE NOTE: If this Contract is a public works project subject to GML §101(5) (i.e., a contract valued at or below $3M for projects in New York City) or if the Contract is subject to a project labor agreement in accordance with Labor Law §222, and the bidder is required to identify at the time of bid submission its intended subcontractors for the Wicks trades (plumbing and gas fitting; steam heating, hot water heating, ventilating and air conditioning (HVAC); and electric wiring), the Contractor must identify all those to which it intends to award construction subcontracts for any portion of the Wicks trade work at the time of bid submission, regardless of what point in the life of the contract such subcontracts will occur. In identifying intended subcontractors in the bid submission, bidders may satisfy any Participation Goals established for this Contract by proposing one or more subcontractors that are MBEs and/or WBEs for any portion of the Wicks trade work.** In the event that the Contractor's selection of a subcontractor is disapproved, the Contractor shall have a reasonable time to propose alternate subcontractors.

6. MBE and WBE firms must be certified by DSBS in order for the Contractor to credit such firms' participation toward the attainment of the **Participation Goals**. Such certification must occur prior to the firms' commencement of work. A list of MBE and WBE firms may be obtained from the DSBS website at www.nyc.gov/buycertified, by emailing DSBS at buyer@sbs.nyc.gov, by calling (212) 513-6356, or by visiting or writing DSBS at 110 William St., New York, New York, 10038, 7th floor. Eligible firms that have not yet been certified may contact DSBS in order to seek certification by visiting www.nyc.gov/getcertified, emailing MWBE@sbs.nyc.gov, or calling the DSBS certification helpline at (212) 513-6311. A firm that is certified as both an MBE and a WBE may be counted either toward the goal for MBEs or the goal for WBEs, but not both. No credit shall be given for participation by a graduate MBE or graduate WBE, as defined in Section 6-129(c)(20).

7. Where an **M/WBE** Utilization Plan has been submitted, the Contractor shall, with each voucher for payment, and/or periodically as Agency may require, submit statements, certified under penalty of perjury, which shall include, but not be limited to,: the total amount the Contractor paid to its direct subcontractors, and, where applicable pursuant to Section 6-129(j), the total amount direct subcontractors paid to indirect subcontractors; the names, addresses and contact numbers of each MBE or WBE hired as a subcontractor by the Contractor, and, where applicable, hired by any of the Contractor's direct subcontractors; and the dates and amounts paid to each MBE or WBE. The Contractor shall also submit, along with its voucher for final payment: the total amount it paid to subcontractors, and, where applicable pursuant to Section 6-129(j), the total amount its direct subcontractors paid directly to their indirect subcontractors; and a final list, certified under penalty of perjury, which shall include the name, address and contact information of each subcontractor that is an MBE or WBE, the work performed by, and the dates and amounts paid to each.

8. If payments made to, or work performed by, MBEs or WBEs are less than the amount specified in the Contractor's **M/WBE** Utilization Plan, Agency shall take appropriate action, in accordance with Section 6-129 and Article II below, unless the Contractor has obtained a modification of its **M/WBE** Utilization Plan in accordance with Section 6-129 and Part A, Section 11 below.

9. Where an **M/WBE** Utilization Plan has been submitted, and the Contractor requests a change order the value of which exceeds the greater of 10 percent of the Contract or Task Order, as applicable, or $500,000, Agency shall review the scope of work for the Contract or Task Order, as applicable, and the scale and types of work involved in the change order, and determine whether the **Participation Goals** should be modified.

10. Pre-award waiver of the **Participation Goals**. (a) A bidder or proposer, or contractor with respect to a Task Order, may seek a pre-award full or partial waiver of the **Participation Goals** in accordance with Section 6-129, which requests that Agency change one or more **Participation Goals** on the grounds that the **Participation Goals** are unreasonable in light of the availability of certified firms to perform the services required, or by demonstrating that it has legitimate business reasons for proposing a lower level of subcontracting in its M/WBE Utilization Plan.

(b) To apply for a full or partial waiver of the **Participation Goals**, a bidder, proposer, or contractor, as applicable, must complete Part III (Page 5) of Schedule B and submit such request no later than seven (7) calendar days prior to the date and time the bids, proposals, or Task Orders are due, in writing to the Agency by email at zhangji@ddc.nyc.gov or via facsimile at (718) 391-1886. Bidders, proposers, or contractors, as applicable, who have submitted requests will receive an Agency response by no later than two (2) calendar days prior to the due date for bids, proposals, or Task Orders; provided, however, that if that date would fall on a weekend or holiday, an Agency response will be provided by close-of-business on the business day before such weekend or holiday date.

(c) If the Agency determines that the **Participation Goals** are unreasonable in light of the availability of certified firms to perform the services required, it shall revise the solicitation and extend the deadline for bids and proposals, or revise the Task Order, as applicable.

(d) Agency may grant a full or partial waiver of the **Participation Goals** to a bidder, proposer or contractor, as applicable, who demonstrates—before submission of the bid, proposal or Task Order, as applicable—that it has legitimate business reasons for proposing the level of subcontracting in its **M/WBE** Utilization Plan. In making its determination, Agency shall consider factors that shall include, but not be limited to, whether the bidder, proposer or contractor, as applicable, has the capacity and the bona fide intention to perform the Contract without any subcontracting, or to perform the Contract without awarding the amount of subcontracts represented by the **Participation Goals**. In making such determination, Agency may consider whether the **M/WBE** Utilization Plan is consistent with past subcontracting practices of the bidder, proposer or contractor, as applicable, whether the bidder, proposer or contractor, as applicable, has made efforts to form a joint venture with a certified firm, and whether the bidder, proposer, or contractor, as applicable, has made good faith efforts to identify other portions of the Contract that it intends to subcontract.

11. Modification of **M/WBE** Utilization Plan. (a) A Contractor may request a modification of its **M/WBE** Utilization Plan after award of this Contract. **PLEASE NOTE: If this Contract is a public works project subject to GML §101(5) (i.e., a contract valued at or below $3M for projects in New York City) or if the Contract is subject to a project labor agreement in accordance with Labor Law §222, and the bidder is required to identify at the time of bid submission its intended subcontractors for the Wicks trades (plumbing and gas fitting; steam heating, hot water heating, ventilating and air conditioning (HVAC); and electric wiring), the Contractor may request a Modification of its M/WBE Utilization Plan as part of its bid submission.** The Agency may grant a request for Modification of a Contractor's **M/WBE** Utilization Plan if it determines that the Contractor has established, with appropriate documentary and other evidence, that it made reasonable, good faith efforts to meet the **Participation Goals.** In making such determination, Agency shall consider evidence of the following efforts, as applicable, along with any other relevant factors:

(i) The Contractor advertised opportunities to participate in the Contract, where appropriate, in general circulation media, trade and professional association publications and small business media, and publications of minority and women's business organizations;
(ii) The Contractor provided notice of specific opportunities to participate in the Contract, in a timely manner, to minority and women's business organizations;
(iii) The Contractor sent written notices, by certified mail or facsimile, in a timely manner, to advise MBEs or WBEs that their interest in the Contract was solicited;
(iv) The Contractor made efforts to identify portions of the work that could be substituted for portions originally designated for participation by MBEs and/or WBEs in the M/WBE Utilization Plan, and for which the Contractor claims an inability to retain MBEs or WBEs;

(v) The Contractor held meetings with MBEs and/or WBEs prior to the date their bids or proposals were due, for the purpose of explaining in detail the scope and requirements of the work for which their bids or proposals were solicited;

(vi) The Contractor made efforts to negotiate with MBEs and/or WBEs as relevant to perform specific subcontracts, or act as suppliers or service providers;

(vii) Timely written requests for assistance made by the Contractor to Agency's M/WBE liaison officer and to DSBS;

(viii) Description of how recommendations made by DSBS and Agency were acted upon and an explanation of why action upon such recommendations did not lead to the desired level of participation of MBEs and/or WBEs.

Agency's M/WBE officer shall provide written notice to the Contractor of the determination.

(b) The Agency may modify the **Participation Goals** when the scope of the work has been changed by the Agency in a manner that affects the scale and types of work that the Contractor indicated in its **M/WBE** Utilization Plan would be awarded to subcontractors.

12. If this Contract is for an indefinite quantity of construction, standard or professional services or is a requirements type contract and the Contractor has submitted an **M/WBE** Utilization Plan and has committed to subcontract work to MBEs and/or WBEs in order to meet the **Participation Goals,** the Contractor will not be deemed in violation of the M/WBE Program requirements for this Contract with regard to any work which was intended to be subcontracted to an MBE and/or WBE to the extent that the Agency has determined that such work is not needed.

13. If **Participation Goals** have been established for this Contract or a Task Order issued pursuant to this Contract, at least once annually during the term of the Contract or Task Order, as applicable, Agency shall review the Contractor's progress toward attainment of its M/WBE Utilization Plan, including but not limited to, by reviewing the percentage of work the Contractor has actually awarded to MBE and/or WBE subcontractors and the payments the Contractor made to such subcontractors.

14. If **Participation Goals** have been established for this Contract or a Task Order issued pursuant to this Contract, Agency shall evaluate and assess the Contractor's performance in meeting those goals, and such evaluation and assessment shall become part of the Contractor's overall contract performance evaluation.

PART B: MISCELLANEOUS

1. The Contractor shall take notice that, if this solicitation requires the establishment of an **M/WBE** Utilization Plan, the resulting contract may be audited by DSBS to determine compliance with Section 6-129. See §6-129(e)(10). Furthermore, such resulting contract may also be examined by the City's Comptroller to assess compliance with the **M/WBE** Utilization Plan.

2. Pursuant to DSBS rules, construction contracts that include a requirement for an **M/WBE** Utilization Plan shall not be subject to the law governing Locally Based Enterprises set forth in Section 6-108.1 of the Administrative Code of the City of New York.

3. DSBS is available to assist contractors and potential contractors in determining the availability of MBEs and/or WBEs to participate as subcontractors, and in identifying opportunities that are appropriate for participation by MBEs and/or WBEs in contracts.

4. Prospective contractors are encouraged to enter into qualified joint venture agreements with MBEs and/or WBEs as defined by Section 6-129(c)(30).

5. By submitting a bid or proposal the Contractor hereby acknowledges its understanding of the M/WBE Program requirements set forth herein and the pertinent provisions of Section 6-129, and any rules promulgated thereunder, and if awarded this Contract, the Contractor hereby agrees to comply with the M/WBE Program requirements of this Contract and pertinent provisions of Section 6-129, and any rules promulgated thereunder, all of which shall be deemed to be material terms of this Contract. The Contractor hereby agrees to make all reasonable, good faith efforts to solicit and obtain the participation of MBEs and/or WBEs to meet the required **Participation Goals.**

ARTICLE II. ENFORCEMENT

1. If Agency determines that a bidder or proposer, as applicable, has, in relation to this procurement, violated Section 6-129 or the DSBS rules promulgated pursuant to Section 6-129, Agency may disqualify such bidder or proposer, as applicable, from competing for this Contract and the Agency may revoke such bidder's or proposer's prequalification status, if applicable.

2. Whenever Agency believes that the Contractor or a subcontractor is not in compliance with Section 6-129 or the DSBS rules promulgated pursuant to Section 6-129, or any provision of this Contract that implements Section 6-129, including, but not limited to any **M/WBE** Utilization Plan, Agency shall send a written notice to the Contractor describing the alleged noncompliance and offering the Contractor an opportunity to be heard. Agency shall then conduct an investigation to determine whether such Contractor or subcontractor is in compliance.

3. In the event that the Contractor has been found to have violated Section 6-129, the DSBS rules promulgated pursuant to Section 6-129, or any provision of this Contract that implements Section 6-129, including, but not limited to, any **M/WBE** Utilization Plan, Agency may determine that one of the following actions should be taken:

(a) entering into an agreement with the Contractor allowing the Contractor to cure the violation;
(b) revoking the Contractor's pre-qualification to bid or make proposals for future contracts;
(c) making a finding that the Contractor is in default of the Contract;
(d) terminating the Contract;
(e) declaring the Contractor to be in breach of Contract;
(f) withholding payment or reimbursement;
(g) determining not to renew the Contract;
(h) assessing actual and consequential damages;
(i) assessing liquidated damages or reducing fees, provided that liquidated damages may be based on amounts representing costs of delays in carrying out the purposes of the M/WBE Program, or in meeting the purposes of the Contract, the costs of meeting utilization goals through additional procurements, the administrative costs of investigation and enforcement, or other factors set forth in the Contract;
(j) exercising rights under the Contract to procure goods, services or construction from another contractor and charge the cost of such contract to the Contractor that has been found to be in noncompliance; or
(k) taking any other appropriate remedy.

4. If an **M/WBE** Utilization Plan has been submitted, and pursuant to this Article II, Section 3, the Contractor has been found to have failed to fulfill its **Participation Goals** contained in its **M/WBE** Utilization Plan or the **Participation Goals** as modified by Agency pursuant to Article I, Part A, Section 11, Agency may assess liquidated damages in the amount of ten percent (10%) of the difference between the dollar amount of work required to be awarded to MBE and/or WBE firms to meet the **Participation Goals** and the dollar amount the Contractor actually awarded and paid, and/or credited, to MBE and/or WBE firms. In view of the difficulty of accurately ascertaining the loss which the City will suffer by reason of Contractor's failure to meet the **Participation Goals**, the foregoing amount is hereby fixed and agreed as the liquidated damages that the City will suffer by reason of such failure, and not as a penalty. Agency may deduct and retain out of any monies which may become due under this Contract the amount of any such liquidated damages; and in case the amount which may become due under this Contract shall be less than the amount of liquidated damages suffered by the City, the Contractor shall be liable to pay the difference.

5. Whenever Agency has reason to believe that an MBE and/or WBE is not qualified for certification, or is participating in a contract in a manner that does not serve a commercially useful function (as defined in Section 6-129(c)(8)), or has violated any provision of Section 6- 129, Agency shall notify the Commissioner of DSBS who shall determine whether the certification of such business enterprise should be revoked.

6. Statements made in any instrument submitted to Agency pursuant to Section 6-129 shall be submitted under penalty of perjury and any false or misleading statement or omission shall be grounds for the application of any applicable criminal and/or civil penalties for perjury. The making of a false or fraudulent statement by an MBE and/or WBE in any instrument submitted pursuant to Section 6-129 shall, in addition, be grounds for revocation of its certification.

7. The Contractor's record in implementing its **M/WBE** Utilization Plan shall be a factor in the evaluation of its performance. Whenever Agency determines that a Contractor's compliance with an **M/WBE** Utilization Plan has been unsatisfactory, Agency shall, after consultation with the City Chief Procurement Officer, file an advice of caution form for inclusion in VENDEX as caution data.

Tax ID #: 47-1391529

APT E-PIN #: 85018B0059

SCHEDULE B – M/WBE Utilization Plan
Part I: M/WBE Participation Goals

Part I to be completed by contracting agency

Contract Overview

APT E- Pin #	85018B0059	**FMS Project ID#:**	SEQ200531
Project Title/ Agency PIN #	STORM SEWER EXTENSIONS INCLUDING WATER MAIN WORK IN 239TH STREET BETWEEN 87TH AVENUE AND 88TH AVENUE ETC., /8502018SE0015C		
Bid/Proposal Response Date	FEBRUARY 15, 2018		
Contracting Agency	Department of Design and Construction		
Agency Address	30-30 Thomson Ave. **City** Long Island City **State** NY **Zip Code** 11101		
Contact Person	Emmanuel K. Charles	**Title**	MWBE Compliance Analyst
Telephone #	(718) 391-1450	**Email**	charlesem@ddc.nyc.gov

Project Description *(attach additional pages if necessary)*

PROJECT ID: SEQ200531

STORM SEWER EXTENSIONS

IN 239TH STREET BETWEEN 87TH AVENUE AND 88TH AVENUE
IN 87TH AVENUE BETWEEN CROSS ISLAND PARKWAY AND 239TH STREET
IN CROSS ISLAND PARKWAY WEST SERVICE ROAD BETWEEN 90TH AVENUE AND 87TH AVENUE

CAPITAL PROJECT WM-1

WATER MAIN WORK

IN 239TH STREET BETWEEN 87TH AVENUE AND 88TH AVENUE
IN 87TH AVENUE BETWEEN CROSS ISLAND PARKWAY AND 239TH STREET
IN CROSS ISLAND PARKWAY WEST SERVICE ROAD BETWEEN 90TH AVENUE AND 87TH AVENUE
Together With All Work Incidental Thereto
BOROUGH OF QUEENS
CITY OF NEW YORK

M/WBE Participation Goals for Services
Enter the percentage amount for each group or for an unspecified goal. Please note that there are no goals for Asian Americans in Professional Services.

Prime Contract Industry: Construction

Group	Percentage
Unspecified*	%
or	
Black American	UNSPECIFIED*
Hispanic American	UNSPECIFIED*
Asian American	UNSPECIFIED*
Women	UNSPECIFIED*
Total Participation Goals	% **Line 1**

**Note:* *For this procurement, individual ethnicity and gender goals are not specified. The Total Participation Goal for construction contracts may be met by using either Black-American, Hispanic-American, Asian American, or Women certified firms or any combination of such firms.*

Tax ID #: 47-1391529

APT E-
PIN #: 8508B0059

SCHEDULE B - Part II: M/WBE Participation Plan

Part II to be completed by the bidder/proposer.
Please note: For Non-M/WBE Prime Contractors who will NOT subcontract any services and will self-perform the entire contract, you must obtain a FULL waiver by completing the Waiver Application on pages 17 and 18 and timely submitting it to the contracting agency pursuant to the Notice to Prospective Contractors. Once a FULL WAIVER is granted, it must be included with your bid or proposal and you do not have to complete or submit this form with your bid or proposal.

Section I: Prime Contractor Contact Information

Tax ID #	47-1391529	**FMS Vendor ID #**	
Business Name	Inter LaPeruta JV	**Contact Person**	Michael Mutino
Address	35 Colonial Place, Mount Vernon, NY 10550		
Telephone #	914.863.0000	**Email**	mmutino@intercontracting corp.com

Section II: M/WBE Utilization Goal Calculation: Check the applicable box and complete subsection.

PRIME CONTRACTOR ADOPTING AGENCY M/WBE PARTICIPATION GOALS

☒ **For Prime Contractors (including Qualified Joint Ventures and M/WBE firms) adopting Agency M/WBE Participation Goals.**	**Total Bid/Proposal Value**		**Agency Total Participation Goals (Line 1, Page 13)**		**Calculated M/WBE Participation Amount**
Calculate the total dollar value of your total bid that you agree will be awarded to M/WBE subcontractors for services and/or credited to an M/WBE prime contractor or Qualified Joint Venture. Please review the Notice to Prospective Contractors for more information on how to obtain credit for M/WBE participation.	$ 8,995,015.35	X	9%	=	$ 809,551.38 Line 2

PRIME CONTRACTOR OBTAINED PARTIAL WAIVER APPROVAL: ADOPTING MODIFIED M/WBE PARTICIPATION GOALS

☐ **For Prime Contractors (including Qualified Joint Ventures and M/WBE firms) adopting Modified M/WBE Participation Goals.**	**Total Bid/Proposal Value**		**Adjusted Participation Goal (From Partial Waiver)**		**Calculated M/WBE Participation Amount**
Calculate the total dollar value of your total bid that you agree will be awarded to M/WBE subcontractors for services and/or credited to an M/WBE prime contractor or Qualified Joint Venture. Please review the Notice to Prospective Contractors for more information on how to obtain credit for M/WBE participation.	$	X		=	$ Line 3

Tax ID #: 47-1391529

APT E-
PIN#: 8508B0059

Section III: M/WBE Utilization Plan: How Proposer/Bidder Will Fulfill M/WBE Participation Goals. Please review the Notice to Prospective Contractors for more information on how to obtain credit for M/WBE participation. Check applicable box. The Proposer or Bidder will fulfill the M/WBE Participation Goals:

☐ As an M/WBE Prime Contractor that will self-perform and/or subcontract to other M/WBE firms a portion of the contract the value of which is at least the amount located on Lines 2 or 3 above, as applicable. The value of any work subcontracted to non-M/WBE firms will not be credited towards fulfillment of M/WBE Participation Goals. Please check all that apply to Prime Contractor:

☐ MBE ☐ WBE

☐ As a Qualified Joint Venture with an M/WBE partner, in which the value of the M/WBE partner's participation and/or the value of any work subcontracted to other M/WBE firms is at least the amount located on Lines 2 or 3 above, as applicable. The value of any work subcontracted to non M/WBE firms will not be credited towards fulfillment of M/WBE Participation Goals.

☑ As a non M/WBE Prime Contractor that will enter into subcontracts with M/WBE firms the value of which is at least the amount located on Lines 2 or 3 above, as applicable.

Section IV: General Contract Information

What is the expected percentage of the total contract dollar value that you expect to award in subcontracts for services, regardless of M/WBE status? % 12.6

✓ Scopes of Subcontract Work

Enter brief description of the type(s) and dollar value of subcontracts for all/any services you plan on subcontracting if awarded this contract. For each item, indicate whether the work is designated for participation by MBEs and/or WBEs and the time frame in which such work is scheduled to begin and end. Use additional sheets if necessary.

1. Trucking + Disp. Excess Material - MWBE - Duration of Proj - $110,000
2. Test Lab - Duration of Job - $33,000
3. Sawcut - Duration of Proj. - MWBE - $30,000
4. Tree Cutting - Duration of Proj. - MWBE - $20,000
5. Paving - End of Proj - $147,000
6.
7.
8.
9.
10.
11.
12.
13.
14.
15.
16.
17.

Tax ID #: 47-1391524

APT E[illegible]
PIN #: 8508B0059

Section V: Vendor Certification and Required Affirmations

I hereby:

1) acknowledge my understanding of the M/WBE participation requirements as set forth herein and the pertinent provisions of Section 6-129 of the Administrative Code of the City of New York ("Section 6-129"), and the rules promulgated thereunder;

2) affirm that the information supplied in support of this M/WBE Utilization Plan is true and correct;

3) agree, if awarded this Contract, to comply with the M/WBE participation requirements of this Contract, the pertinent provisions of Section 6-129, and the rules promulgated thereunder, all of which shall be deemed to be material terms of this Contract;

4) agree and affirm that it is a material term of this Contract that the Vendor will award the total dollar value of the M/WBE Participation Goals to certified MBEs and/or WBEs, unless a full waiver is obtained or such goals are modified by the Agency; and

5) agree and affirm, if awarded this Contract, to make all reasonable, good faith efforts to meet the M/WBE Participation Goals, or If a partial waiver is obtained or such goals are modified by the Agency, to meet the modified Participation Goals by soliciting and obtaining the participation of certified MBE and/or WBE firms.

Signature [signature] **Date** 3/5/18

Print Name Michael Mutino **Title** Partner

SCHEDULE B – PART III – REQUEST FOR WAIVER OF M/WBE PARTICIPATION REQUIREMENT

Contract Overview

Tax ID # _____ **FMS Vendor ID #** _____

Business Name _____

Contact Name _____ **Telephone #** _____ **Email** _____

Type of Procurement ☐ **Competitive Sealed Bids** ☐ **Other** **Bid/Response Due Date** _____

APT E-PIN # (for this procurement): _____ **Contracting Agency:** _____

M/WBE Participation Goals ***as described in bid/solicitation documents***

_____ % **Agency M/WBE Participation Goal**

Proposed M/WBE Participation Goal ***as anticipated by vendor seeking waiver***

_____ % **of the total contract value anticipated <u>in good faith</u> by the bidder/proposer to be subcontracted for services and/or credited to an M/WBE Prime Contractor or Qualified Joint Venture.**

Basis for Waiver Request: *Check appropriate box & explain in detail below (attach additional pages if needed)*

☐ **Vendor does not subcontract services, and has the capacity and good faith intention to perform all such work itself with its own employees.**

☐ **Vendor subcontracts *some* of this type of work but at a *lower* % than bid/solicitation describes, and has the capacity and good faith intention to do so on this contract. (Attach subcontracting plan outlining services that the vendor will self-perform and subcontract to other vendors or consultants.)**

☐ **Vendor has other legitimate business reasons for proposing the M/WBE Participation Goal above. Explain under separate cover.**

References

List 3 most recent contracts performed for NYC agencies (if any). Include information for each subcontract awarded in performance of such contracts. Add more pages if necessary.

CONTRACT NO. _____ **AGENCY** _____ **DATE COMPLETED** _____

Total Contract Amount $ _____ **Total Amount Subcontracted** $ _____

Item of Work Subcontracted and Value of subcontract _____ Item of Work Subcontracted and Value of subcontract _____ Item of Work Subcontracted and Value of subcontract _____

CONTRACT NO. _____ **AGENCY** _____ **DATE COMPLETED** _____

Total Contract Amount $ _____ **Total Amount Subcontracted** $ _____

Item of Work Subcontracted and Value of subcontract _____ Item of Work Subcontracted and Value of subcontract _____ Item of Work Subcontracted and Value of subcontract _____

CONTRACT NO. **AGENCY** **DATE COMPLETED**

Total Contract Amount $ **Total Amount Subcontracted** $

Item of Work Subcontracted and Value of subcontract _____ Item of Work Subcontracted and Value of subcontract _____ Item of Work Subcontracted and Value of subcontract _____

List 3 most recent contracts performed for other entities. Include information for each subcontract awarded in performance of such contracts. Add more pages if necessary.
(Complete ONLY if vendor has performed fewer than 3 New York City contracts.)

TYPE OF Contract _____ **ENTITY** _____ **DATE COMPLETED** _____

Manager at entity that hired vendor (Name/Phone No./Email) _____

Total Contract Amount $ _____ **Total Amount Subcontracted** $ _____ _____

Type of Work Subcontracted _____ _____ _____

_____

TYPE OF Contract _____ **AGENCY/ENTITY** _____ **DATE COMPLETED** _____

Manager at agency/entity that hired vendor (Name/Phone No./Email) _____

Total Contract Amount $ _____ **Total Amount Subcontracted** $ _____ _____

Item of Work Subcontracted and Value of subcontract _____ Item of Work Subcontracted and Value of subcontract _____ Item of Work Subcontracted and Value of subcontract _____

_____

TYPE OF Contract _____ **AGENCY/ENTITY** _____ **DATE COMPLETED** _____

Manager at entity that hired vendor (Name/Phone No./Email) _____

Total Contract Amount $ _____ **Total Amount Subcontracted** $ _____ _____

Item of Work Subcontracted and Value of subcontract _____ Item of Work Subcontracted and Value of subcontract _____ Item of Work Subcontracted and Value of subcontract _____

_____

VENDOR CERTIFICATION: *I hereby affirm that the information supplied in support of this waiver request is true and correct, and that this request is made in good faith.*

Signature: _____ **Date:** _____

Print Name: _____ **Title:** _____

Shaded area below is for agency completion only

APPRENTICESHIP PROGRAM REQUIREMENTS

Bidders are advised that the Apprenticeship Program Requirements set forth below apply to each contract for which a check mark is indicated before the word "Yes". Compliance with these requirements will be determined solely by the City.

___√___ YES _____ NO

(1) Apprenticeship Program Requirements

Notice to Bidders: Please be advised that, pursuant to the authority granted to the City under Labor Law Section 816-b, the Department of Design and Construction hereby requires that the contractor awarded a contract as a result of this Invitation for Bids, and any of its subcontractors with subcontracts worth two million dollars or over, have, prior to entering into such contract or subcontract, apprenticeship agreements appropriate for the type and scope of work to be performed that have been registered with, and approved by, the New York State Commissioner of Labor. In addition, the contractor and its subcontractors will be required to show that such apprenticeship program/s have successfully passed the two year Probation period following the initial registration date of such program/s with the New York State Department of Labor.

The failure to prove, upon request, that these requirements have been met shall result in the contract not being awarded to the contractor or the subcontract not being approved.

Please be further advised that, pursuant to Labor Law Section 220, the allowable ratio of apprentices to journeypersons in any craft classification shall not be greater than the ratio permitted to the contractor as to its workforce on any job under the registered apprenticeship program.

(2) Apprenticeship Program Questionnaire

The bidder must submit a completed and signed Apprenticeship Program Questionnaire. The Questionnaire is set forth on the following page of the Bid Booklet.

APPRENTICESHIP PROGRAM QUESTIONNAIRE ("APQ")

Bidder Name: Inter LaPenola JV
Project ID Number: SEQ200531
The Bidder MUST complete, sign, and submit this Apprenticeship Program Questionnaire with its bid.

1. Does the bidder have any Apprenticeship Program agreement(s) appropriate for the type and scope of work to be performed? (Note: Participation may be by either direct sponsorship or through collective bargaining agreement(s).)

   X YES _____NO

2. Has/have the bidder's Apprenticeship Program agreement(s) been registered with, and approved by the New York State Commissioner of Labor ("NYSDOL Commissioner")?

   _____YES Provided Through CBAs _____NO

3. Has/have the bidder's Apprenticeship Program successfully passed the two-year Probation period following its initial registration with the New York State Department of Labor ("NYSDOL")?

   _____YES Provided Through CBAs _____NO

If the answers to Questions 1, 2, and 3 are "Yes". The bidder shall, in the space below (and/or attached herewith where applicable), provide the contact information for such Apprenticeship Program(s) as well as information demonstrating that such Apprenticeship Program(s) have passed the two-year Probation period following its initial registration with the NYSDOL. (The bidder may attach additional pages if necessary).

- **Where the bidder directly sponsors any such apprenticeship Program(s),** the bidder shall provide the following:
  - The trade classification(s) covered by such program(s), and the date(s) such program(s) was/were approved by the NYSDOL Commissioner; and/or
  - A copy of a letter(s) from the NYSDOL, on NYSDOL's letterhead, executed by an official thereof, which verifies/verify the trade classification(s) covered by such program(s), and the date(s) such program(s) was/were approved by the NYSDOL Commissioner and the Active status of such program(s).

- **Where the bidder participates in any such Apprenticeship Program(s) through its membership in an employer organization(s) that directly sponsors such program(s) or where the employer association(s) participates in such program(s) through collective bargaining,** the bidder shall provide the following:
  - The contact information for the employer organization(s), and the apprenticeable trade(s) covered pursuant to the bidder's affiliation therewith, and the date such program(s) was/were approved by the NYSDOL Commissioner; or
  - A letter(s) from such employer organization(s), on letterhead of such organization(s), executed by an officer, delegate or official thereof, which verifies/verify the trade classification(s) covered by such program(s) was/were approved by the NYSDOL Commissioner, and that the bidder is both a member in good standing of the identified employer organization and is subject to the provisions of the Apprenticeship Program agreement(s) sponsored thereby.

APPRENTICESHIP PROGRAM QUESTIONNAIRE ("APQ")

Project ID Number: SEQ 200531

- **Where the bidder participates in any such Apprenticeship Programs through collective bargaining agreements,** the bidder shall provide the following:
  - The contact information for such collective bargaining entity(ies) and the apprenticeable trade(s) covered pursuant to the bidder's affiliation therewith;
  - A letter(s) from such collective bargaining entity(ies), on letterhead of such entity(ies), executed by an officer, delegate or official thereof, which verifies/verify the bidder's status as a signatory/participant in good standing to such collective bargaining entity(ies) Apprenticeship Program Agreements.

Bidder: Inter Caperuta JV

By: _____ Title: Partner
(Signature of Partner or Corporate Officer)

Date: 3/14/18

BUILDING, CONCRETE
EXCAVATING &
COMMON LABORERS' UNION
LOCAL No. 731
of
GREATER NEW YORK
LONG ISLAND AND VICINITY
of the
LABORERS' INTERNATIONAL
UNION OF NORTH AMERICA

INDEPENDENT AGREEMENT

JULY 1, 2016 to APRIL 30, 2022

This Agreement and all of its terms and provisions are based on an effort and a spirit of bringing about more equitable conditions in the Construction Industry, and the language herein shall not be misconstrued to evade the principles or intent of this Agreement.

This Agreement may not be altered, modified or changed in any way unless any such proposed alteration, modification or change is in writing, is approved by the Union and is initialed or signed by an officer of the Union at the location in the Agreement of such proposed alteration, modification or change.

IN WITNESS WHEREOF, the parties have executed this Agreement as of the day and year stated in Article XIII hereof.

EMPLOYER:

BY: Inter La Perva JV
(Full and Exact Name of Employer)

BY: Partner
(Title of signing Representative)

BY:
(Title of Signing Representative)

Dated: 8/17/16

BUILDING, CONCRETE, EXCAVATING
& COMMON LABORERS' UNION
LOCAL NO. 731 OF GREATER
NEW YORK, LONG ISLAND & VICINITY

BY:
Frank Biancaniello
President

BY:
Joseph D'Amato
Business Manager

BY:
Dominic J. Valdner
Secretary-Treasurer

AGREEMENT

BETWEEN

THE HIGHWAY ROAD AND STREET

CONSTRUCTION LABORERS

LOCAL UNION 1010

OF

THE DISTRICT COUNCIL OF PAVERS

AND ROAD BUILDERS OF THE

LABORERS' INTERNATIONAL UNON

OF NORTH AMERICA AFL-CIO

AND

THE EMPLOYER

JULY 1, 2015 - JUNE 30, 2018

INDEPENDENT AGREEMENT
HIGHWAY, ROAD, AND STREET
CONSTRUCTION LABORERS LOCAL 1010
JULY 1, 2015 – JUNE 30, 2018

PAVERS AND ROAD BUILDERS
DISTRICT COUNCIL
By: _____ Date: 6/22/15
Keith Loscalzo, Business Manager

LOCAL 1010
By: _____ Date: 6/22/15
Keith Loscalzo, Business Manager

Print Name of Company _____
By: _____ Date: 6/8/15
Signature

INTER CONTRACTING CORP.
Print Name and Title Michael Mutino
President
Address: 274 White Plains Rd.
Suite 6 Castchester NY 10709
Telephone #: 914 337 1350
Fax #: 914 337 1450
Email Address: MMutino@intercontractingcorp.com
Original Jobsite: _____
(RENEWAL)

Agreement effective this 22 day of January, 20 15 by and between Local Union 14-14B and Local Union 15, 15A, 15C and 15D, International Union of Operating Engineers, AFL-CIO (the "Union") and Inter LuPerula JV (the "Employer").

WHEREAS, the parties hereto acknowledge that there are presently Collective Bargaining Agreements between the Union and the Cement League, the General Contractors Association of New York, the Contractors Association of Greater New York, the Building Contractors Association, Allied Building Metal Industries, Inc., Association of Concrete Contractors of New York, Inc., the Construction Industry Council of Westchester and Hudson Valley, the Associated Brick Mason Contractors of Greater New York, the Association of New York City Concrete Producers, Inc. and the Asbestos Abatement Contractors Association; and **WHEREAS**, the Employer recognizes there are or will be certain amendments, extensions and renewals to the various Association Agreements (hereinafter referred to as the "Association Collective Bargaining Agreements") to be negotiated on behalf of the Employer by the various Employer Associations; and **WHEREAS**, the Employer acknowledges receipt of a copy of each of the Association Collective Bargaining Agreements; and **WHEREAS**, the Employer performs work from time to time which is covered by all or some of the above-mentioned Agreements and recognizes the Union as a source for the procurement of skilled workers for the work described in the applicable Association Collective Bargaining Agreements.

NOW, THEREFORE, the parties agree as follows:

1. The Employer is bound to all the terms and conditions as are applicable from time to time by the nature of the work performed for each of the Association Collective Bargaining Agreements which are incorporated herein by reference as if fully set forth in this Agreement, except as specifically set forth hereafter in paragraphs 2 and 3.

2. The grievance and arbitration procedure described in each Association Collective Bargaining Agreement shall not apply to this Agreement and the procedures shall instead be as follows: Any complaint, dispute or difference arising out of this Agreement shall be referred to the Union Business Agent and a representative of the Employer for a job site meeting within three (3) days notice to them of the occurrence giving rise to such complaint, dispute or difference. If the matter is not resolved within seven (7) days of such meeting, then the aggrieved party may submit the matter for arbitration to one of the two (2) arbitrators named hereafter. These arbitrators shall be John Crotty and Eugene T. Coughlin.

3. The Employer agrees that the operation of Scissor-Lift Trucks is the jurisdiction of the Operating Engineers. Scissor-Lift Trucks used solely as scaffolds or welding platforms will not be manned by an Operating Engineer. Scissor-Lift Trucks used for hoisting any material will be manned by an Operating Engineer. Occasional use of a Scissor-Lift Truck is the jurisdiction of the Operating Engineers, and the computation of the time used as a hoisting machine will be agreed upon by both the Employer and the Union.

4. The parties further agree to be bound to all the agreements and declarations of trusts, amendments and regulations, thereto, establishing the fringe benefit trust funds referenced in the applicable Association Collective Bargaining Agreements and to remit all contributions as set forth under the applicable Association Collective Bargaining Agreements and all amendments, renewals and/or extensions thereto, as adopted by the aforesaid Associations and the aforesaid Local Unions or their designated trustees.

5. The Employer agrees to be responsible for the payment of fringe benefit contributions through the purchase of stamps which are reported for each of the three (3) reporting periods which occur every year in March, July and November. **Owner/Operators Only**: The Employer agrees that for any and all individuals employed as Operating Engineers for any length of time during any given period who are also employed by the Employer during such period in some other capacity and/or hold a different title with the Employer, including but not limited to, owner, shareholder, officer, director, etc. (an "owner/operator"), the Employer shall be responsible for the payment of fringe benefit contributions for a minimum of forty (40) hours per week for every week in such period.

ANY FUTURE ORDER OF FRINGE BENEFIT STAMPS MUST BE MADE BY CERTIFIED CHECK

6. The Employer agrees that the applicable Association shall, on behalf of the Employer, negotiate successor Collective Bargaining Agreements, amendments, renewals and extensions of the applicable Collective Bargaining Agreements and the Employer agrees to be bound by any and all amendments, renewals and/or extensions of the above referenced Association Collective Bargaining Agreements unless and until this Agreement is properly terminated by either the Employer or the Union by providing the other party written notice of intent to terminate at least sixty (60) days but not more than ninety (90) days prior to the expiration date of the applicable Association Collective Bargaining Agreement.

IN WITNESS WHEREOF, the parties have caused this Agreement to be executed by their duly authorized representatives.

Edwin L. Christian
Business Manager
International Union of Operating Engineers, Local 14-14B

John R. Powers
Recording-Corresponding Secretary
International Union of Operating Engineers, Local 14-14B

Thomas A. Callahan
President and Business Manager
International Union of Operating Engineers, Local 15, 15A, 15C and 15D

Christopher R. Thomas
Recording-Corresponding Secretary
International Union of Operating Engineers, Local 15, 15A, 15C and 15D

Inter LaPeruta JV
Company Name

274 White Plains Rd. Suite 6
Address

Eastchester, NY 10709
City, State, Zip Code

914.337.1350
Telephone Number

914.337.1450
Fax Number

MMutino@interconteractingcorp.com
Email Address

Signature of Officer(s)

Michael Mutino, Partner
Name and Title of Officer(s)
(PLEASE PRINT)

In accordance with N.Y.S. Apprenticeship Regulation 601.8 Part (d)(1)(2) & (3), the Employer provides its Federal Employment Identification No. or its N.Y.S. Unemployment No.: 47-1391529

ANY FUTURE ORDER OF FRINGE BENEFIT STAMPS MUST BE MADE BY CERTIFIED CHECK

Project ID. SEQ200531

SAFETY QUESTIONNAIRE

The bidder must include, with its bid, all information requested on this Safety Questionnaire. Failure to provide a completed and signed Safety Questionnaire at the time of bid opening may result in disqualification of the bid as non-responsive.

1. Bidder Information:

Company Name: Inter Culperta JV

DDC Project Number: SEQ200531

Company Size: _____ Ten (10) employees or less

X Greater than ten (10) employees

Company has previously worked for DDC X YES _____ NO

2. Type(s) of Construction Work

TYPE OF WORK	LAST 3 YEARS	THIS PROJECT
General Building Construction		
Residential Building Construction		
Nonresidential Building Construction		
Heavy Construction, except building	X	X
Highway and Street Construction	X	X
Heavy Construction, except highways	X	X
Plumbing, Heating, HVAC		
Painting and Paper Hanging		
Electrical Work		
Masonry, Stonework and Plastering		
Carpentry and Floor Work		
Roofing, Siding, and Sheet Metal		
Concrete Work		
Specialty Trade Contracting		
Asbestos Abatement		
Other (specify)		

3. Experience Modification Rate:

The Experience Modification Rate (EMR) is a rating generated by the National Council of Compensation Insurance (NCCI). This rating is used to determine the contractor's premium for worker's compensation insurance. The contractor may obtain its EMR by contacting its insurance broker or the NCCI. If the contractor cannot obtain its EMR, it must submit a written explanation as to why.

Project ID. SEQ 200531

The Contractor must indicate its Intrastate and Interstate EMR for the past three years. [Note: For contractors with less than three years of experience, the EMR will be considered to be 1.00].

YEAR	INTRASTATE RATE	INTERSTATE RATE
2017	1.07	n/a
2016	1	n/a
2015	1	n/a

If the Intrastate and/or Interstate EMR for any of the past three years is greater than 1.00, the contractor must attach, to this questionnaire, a written explanation for the rating and identify what corrective action was taken to correct the situation resulting in that rating.

4. OSHA Information:

____ YES X NO Contractor has received a willful violation issued by OSHA or New York City Department of Buildings (NYCDOB) within the last three years.

____ YES X NO Contractor has had an incident requiring OSHA notification within 8 hours (i.e., fatality, or hospitalization of three or more employees).

The Occupational Safety and Health Act (OSHA) of 1970 requires employers with ten or more employees, on a yearly basis to complete and maintain on file the form entitled "Log of Work-related Injuries and Illnesses". This form is commonly referred to as the OSHA 300 Log (OSHA 200 Log for 2001 and earlier).

The OSHA 300 Log must be submitted for the last three years for contractors with more than ten employees.

The Contractor must indicate the total number of hours worked by its employees, as reflected in payroll records for the past three years.

The contractor must submit the Incident Rate for Lost Time Injuries (the Incident Rate) for the past three years. The Incident Rate is calculated in accordance with the formula set forth below. For each given year, the total number of incidents is the total number of non-fatal injuries and illnesses reported on the OSHA 300 Log. The 200,000 hours represents the equivalent of 100 employees working forty hours a week, fifty weeks per year.

$$\text{Incident Rate} = \frac{\text{Total Number of Incidents X 200,000}}{\text{Total Number of Hours Worked by Employees}}$$

YEAR	TOTAL NUMBERS OF HOURS WORKED BY EMPLOYEES	INCIDENT RATE
2017	61,359	3.26
2016	29,770	0
2015	30,577	6.54

Project ID. SEQ200531

If the contractor's Incident Rate for any of the past three years is one point higher than the Incident Rate for the type of construction it performs (listed below), the contractor must attach, to this questionnaire, a written explanation for the relatively high rate.

General Building Construction	8.5
Residential Building Construction	7.0
Nonresidential Building Construction	10.2
Heavy Construction, except building	8.7
Highway and Street Construction	9.7
Heavy Construction, except highways	8.3
Plumbing, Heating, HVAC	11.3
Painting and Paper Hanging	6.9
Electrical Work	9.5
Masonry, Stonework and Plastering	10.5
Carpentry and Floor Work	12.2
Roofing, Siding, and Sheet Metal	10.3
Concrete Work	8.6
Specialty Trade Contracting	8.6

5. Safety Performance on Previous DDC Project(s)

X YES ___ NO Contractor previously audited by the DDC Office of Site Safety.

DDC Project Number(s): SE812, SE854, SEK200272

X YES ___ NO Accident on previous DDC Project(s).

DDC Project Number(s): SE854, ___, ___

X YES ___ NO Fatality or Life-altering Injury on DDC Project(s) within the last three years. [Examples of a life-altering injury include loss of limb, loss of a sense (e.g., sight, hearing), or loss of neurological function].

* Heart Attack not work related

DDC Project Number(s): SE854*, ___, ___

Date: 3/14/18

By: _____
(Signature of Owner, Partner, Corporate Officer)

Title: Partner

Pre-Award Process

The bidder is advised that as part of the pre-award review of its bid, it may be required to submit the information described in Sections (A) through (D) below. If required, such information must be submitted by the bidder within five (5) business days following receipt of notification from DDC that it is among the low bidders. Such notification from DDC will be by facsimile or in writing and will specify the types of information must be submitted. The types of information the bidder may be required to submit are described below. In the event the bidder fails to submit the required information within the specified time frame, its bid may be rejected as nonresponsive.

****

(A) **Project Reference Form**: If required, the bidder must complete and submit the Project Reference Form set forth on pages 27 through 29 of this Bid Booklet. The Project Reference Form consists of 3 parts: (1) Contracts Completed by the Bidder, (2) Contracts Currently Under Construction by the Bidder, and (3) Pending Contracts Not Yet Started by the Bidder.

(B) **Copy of License**: If required, the bidder must submit a copy of the license under which the bidder will be performing the work. Such license must clearly show the following: (1) Name of the Licensee, (2) License Number, and (3) Expiration date of the License. A copy of the license will be required from bidders for the following contracts: Plumbing Work, Electrical Work and Asbestos Abatement.

(C) **Financial Information**: If required, the bidder must submit the financial information described below:

(1) Audited Financial Statements: Financial statements (Balance Sheet and Income Statement) of the entity submitting the bid, as audited by an independent auditor licensed to practice as a certified public accountant (CPA). Audited financial statements for the three most recent fiscal years must be submitted. Each such financial statement must include the auditor's standard report.

If the bidder does not have audited financial statements, it must submit an affidavit attesting to the fact that the bidder does not have such statements. In addition, the bidder must submit the following documentation covering the three most recent fiscal years: signed federal tax returns, unaudited financial statements, and a "certified review letter" from a certified public accountant (CPA) verifying the unaudited financial statements.

Unless the most recent audited or unaudited financial statement was issued within ninety (90) days, the bidder must submit interim financial information that includes data on financial position and results of operation (income data) for the current fiscal year. Such information may be summarized on a monthly or quarterly basis or at other intervals.

(2) Schedule of Aged Accounts Receivable, including portion due within ninety (90) days.

(D) **Project Specific Information:** If required, the bidder must submit the project specific information described below:

(1) Statement indicating the number of years of experience the bidder has had and in what type of construction.
(2) Resumes of all key personnel to be involved in the project, including the proposed project superintendent.
(3) List of significant pieces of equipment expected to be used for the contract, and whether such equipment is owned or leased.
(4) Description of work expected to be subcontracted, and to what firms, if known.
(5) List of key material suppliers.
(6) Preliminary bar chart time schedule
(7) Contractor's expected means of financing the project. This should be based on the assumption that the contractor is required to finance 2X average monthly billings throughout the contract period.
(8) Any other issues the contractor sees as impacting his ability to complete the project according to the contract.

In addition to the information described in Sections (A) through (D) above, the bidder shall submit such additional information as the Commissioner may require, including without limitation, an explanation or justification for specific unit price items.

The bidder is further advised that it may be required to attend a pre-award meeting with DDC representatives. If such a meeting is convened, the bidder will be advised as to any additional material to be provided.

A. PROJECT REFERENCES – SIMILAR CONTRACTS COMPLETED BY THE BIDDER

List all contracts substantially completed within the last 4 years similar to the contract being awarded, up to a maximum of 10, in descending order of date of substantial completion.

Project & Location	Contract Type	Contract Amount ($000)	Date Completed	Owner Reference & Tel. No.	Architect/Engineer Reference & Tel. No. if different from owner
SER200272 Dixon Ave, SI	Sewer + WM	$8.3 MM	6/17	DDC	
SER200220 Barrett Ave, SI	Sewer + WM	$8.3 MM	5/16	DDC	

B. PROJECT REFERENCES – CONTRACTS CURRENTLY UNDER CONSTRUCTION BY THE BIDDER

List all contracts currently under construction even if they are not similar to the contract being awarded.

Project & Location	Contract Type	Contract Amount ($000)	Subcontracted to Others ($000)	Uncompleted Portion ($000)	Date Scheduled to Complete	Owner Reference & Tel. No.	Architect/Engineer Reference & Tel. No. if different from owner
SE854 Lucas St., Queens	Sewer + WM	$20mm	$3mm	$500k	5/18	DDC	
SE812 Page Ave, SI	Sewer + WM	$47mm	$6mm	$44mm	6/20	DDC	

C. PROJECT REFERENCES – PENDING CONTRACTS NOT YET STARTED BY THE BIDDER

List all contracts awarded to or won by the bidder but not yet started.

Project & Location	Contract Type	Contract Amount ($000)	Date Scheduled to Start	Owner Reference & Tel. No.	Architect/Engineer Reference & Tel. No. if different from owner
None					

OFFICE OF THE MAYOR
BUREAU OF LABOR SERVICES
CONTRACT CERTIFICATE

To be completed if the contract is less than $1,000,000

Contractor: _____

Address: _____

_____

Telephone Number: _____

Name and Title of Signatory: _____

_____

Contracting Agency or Owner: _____

Project Number: _____

Proposed Contract Amount: _____

Description and Address of Proposed Contract: _____

Names of Subcontractors in the amount of 750,000 or more on this contract (if not known at this time, so state indicating that trades will be subcontracted):

_____

_____

_____

I, (fill in name of person signing) _____, hereby affirm that I am authorized by the above-named contractor to certify that said contractor's proposed contract with the above-named owner or city agency is less than $1,000,000. This affirmation is made in accordance with Executive Order No. 50 (1980) as amended and its implementing regulations.

_____ _____
Date Signature

WILLFUL OR FRAUDULENT FALSIFICATION OF ANY DATA OR INFORMATION SUBMITTED HEREWITH MAY RESULT IN THE TERMINATION OF ANY CONTRACT BETWEEN THE CITY AND THE BIDDER OR CONTRACTOR AND BAR THE BIDDER OR CONTRACTOR FROM PARTICIPATION IN ANY CITY CONTRACT FOR A PERIOD OF UP TO THREE YEARS. FURTHER, SUCH FALSIFICATION MAY RESULT IN CRIMINAL PROSECUTION.

VENDEX COMPLIANCE

(A) **Vendex Fees:** Pursuant to Procurement Policy Board Rule 2-08(f)(2), the contractor will be charged a fee for the administration of the VENDEX system, including the Vendor Name Check process, if a Vendor Name Check review is required to be conducted by the Department of Investigation. The contractor shall also be required to pay the applicable required fees for any of its subcontractors for which Vendor Name Check reviews are required. The fee(s) will be deducted from payments made to the contractor under the contract. For contracts with an estimated value of less than or equal to $1,000,000, the fee will be $175 per Vendor Name Check review. For contracts with an estimated value of greater than $1,000,000, the fee will be $350 per Vendor Name Check review.

(B) **Confirmation of Vendex Compliance:** The Bidder shall submit this Confirmation of Vendex Compliance to the Department of Design and Construction, Contracts Section, 30-30 Thomson Avenue – First Floor, Long Island City, NY 11101.

Bid Information: The Bidder shall complete the bid information set forth below.

Name of Bidder: _____
Bidder's Address: _____
Bidder's Telephone Number: _____
Bidder's Fax Number: _____
Date of Bid Opening: _____
PROJECT ID: _____

Vendex Compliance: To demonstrate compliance with Vendex requirements, the Bidder shall complete either Section (1) or Section (2) below, whichever applies.

(1) **Submission of Vendex Questionnaires to MOCS:** By signing in the space provided below, the Bidder certifies that as of the date specified below, the Bidder has submitted Vendex Questionnaires to the Mayor's Office of Contract Services, Attn: VENDEX, 253 Broadway, 9th Floor, New York, New York 10007.

Date of Submission: _____

By: _____
(Signature of Partner or corporate officer)

Print Name: _____

(2) **Submission of Certification of No Change to DDC:** By signing in the space provided below, the Bidder certifies that it has read the instructions in a "Vendor's Guide to Vendex" and that such instructions do not require the Bidder to submit Vendex Questionnaires. The Bidder has completed **TWO ORIGINALS** of the Certification of No Change set forth on the next page of this Bid Booklet.

By: _____
(Signature of Partner or corporate officer)

Print Name: _____

Certificate of No Change Form

Mayor's Office of Contract Services

- Please submit two completed forms. Copies will not be accepted.
- Please send both copies to the agency that requested it, unless you are advised to send it directly to the Mayor's Office of Contract Services (MOCS).
- A materially false statement willfully or fraudulently made in connection with this certification, and/or the failure to conduct appropriate due diligence in verifying the information that is the subject of this certification, may result in rendering the submitting entity non-responsible for the purpose of contract award.
- A materially false statement willfully or fraudulently made in connection with this certification may subject the person making the false statement to criminal charges

I, _____, being duly sworn, state that I have read
Enter Your Name

and understand all the items contained in the vendor questionnaire and any submission of change as identified on page one of this form and certify that as of this date, these items have not changed. I further certify that, to the best of my knowledge, information and belief, those answers are full, complete, and accurate; and that, to the best of my knowledge, information, and belief, those answers continue to be full, complete, and accurate.

In addition, I further certify on behalf of the submitting vendor that the information contained in the principal questionnaire(s) and any submission of change identified on page two of this form have not changed and have been verified and continue, to the best of my knowledge, to be full, complete and accurate.

I understand that the City of New York will rely on the information supplied in this certification as additional inducement to enter into a contract with the submitting entity.

Vendor Questionnaire *This section is required.*

This refers to the vendor questionnaire(s) submitted for the vendor doing business with the City.

Name of Submitting Entity: _____

Vendor's Address: _____

Vendor's EIN or TIN: _____ Requesting Agency: _____

Are you submitting this Certification as a parent? (Please circle one) Yes No

Signature date on the last full vendor questionnaire signed for the submitting vendor: _____

Signature date on change submission for the submitting vendor: _____

Principal Questionnaire

This section refers to the most recent principal questionnaire submissions.

Mayor's Office of Contract Services

	Principal Name	Date of signature on last full Principal Questionnaire	Date(s) of signature on submission of change
1			
2			
3			
4			
5			
6			

☐ Check if additional changes were submitted and attach a document with the date of additional submissions.

Certification *This section is required.*

This form must be signed and notarized. Please complete this twice. Copies will not be accepted.

Certified By:

_____
Name (Print)

_____
Title

_____
Name of Submitting Entity

_____ _____
Signature *Date*

Notarized By:

_____ _____ _____
Notary Public *County License Issued* *License Number*

Sworn to before me on: _____
Date

Certificate of No Change Form

- Please submit two completed forms. Copies will not be accepted.
- Please send both copies to the agency that requested it, unless you are advised to send it directly to the Mayor's Office of Contract Services (MOCS).
- A materially false statement willfully or fraudulently made in connection with this certification, and/or the failure to conduct appropriate due diligence in verifying the information that is the subject of this certification, may result in rendering the submitting entity non-responsible for the purpose of contract award.
- A materially false statement willfully or fraudulently made in connection with this certification may subject the person making the false statement to criminal charges

I, _____, being duly sworn, state that I have read
Enter Your Name

and understand all the items contained in the vendor questionnaire and any submission of change as identified on page one of this form and certify that as of this date, these items have not changed. I further certify that, to the best of my knowledge, information and belief, those answers are full, complete, and accurate; and that, to the best of my knowledge, information, and belief, those answers continue to be full, complete, and accurate.

In addition, I further certify on behalf of the submitting vendor that the information contained in the principal questionnaire(s) and any submission of change identified on page two of this form have not changed and have been verified and continue, to the best of my knowledge, to be full, complete and accurate.

I understand that the City of New York will rely on the information supplied in this certification as additional inducement to enter into a contract with the submitting entity.

Vendor Questionnaire *This section is required.*

This refers to the vendor questionnaire(s) submitted for the vendor doing business with the City.

Name of Submitting Entity: _____

Vendor's Address: _____

Vendor's EIN or TIN: _____ Requesting Agency: _____

Are you submitting this Certification as a parent? (Please circle one) Yes No

Signature date on the last full vendor questionnaire signed for the submitting vendor: _____

Signature date on change submission for the submitting vendor: _____

Principal Questionnaire

This section refers to the most recent principal questionnaire submissions.

	Principal Name	Date of signature on last full Principal Questionnaire	Date(s) of signature on submission of change
1			
2			
3			
4			
5			
6			

☐ Check if additional changes were submitted and attach a document with the date of additional submissions.

Certification *This section is required.*

This form must be signed and notarized. Please complete this twice. Copies will not be accepted.

Certified By:

_____
Name (Print)

_____
Title

_____
Name of Submitting Entity

_____ _____
Signature *Date*

Notarized By:

_____ _____ _____
Notary Public *County License Issued* *License Number*

Sworn to before me on: _____
Date

IRAN DIVESTMENT ACT COMPLIANCE RIDER

FOR NEW YORK CITY CONTRACTORS

The Iran Divestment Act of 2012, effective as of April 12, 2012, is codified at State Finance Law ("SFL") §165-a and General Municipal Law ("GML") §103-g. The Iran Divestment Act, with certain exceptions, prohibits municipalities, including the City, from entering into contracts with persons engaged in investment activities in the energy sector of Iran. Pursuant to the terms set forth in SFL §165-a and GML §103-g, a person engages in investment activities in the energy sector of Iran if:

(a) The person provides goods or services of twenty million dollars or more in the energy sector of Iran, including a person that provides oil or liquefied natural gas tankers, or products used to construct or maintain pipelines used to transport oil or liquefied natural gas, for the energy sector of Iran; or

(b) The person is a financial institution that extends twenty million dollars or more in credit to another person, for forty-five days or more, if that person will use the credit to provide goods or services in the energy sector in Iran and is identified on a list created pursuant to paragraph (b) of subdivision three of Section 165-a of the State Finance Law and maintained by the Commissioner of the Office of General Services.

A bid or proposal shall not be considered for award nor shall any award be made where the bidder or proposer fails to submit a signed and verified bidder's certification.

Each bidder or proposer must certify that it is not on the list of entities engaged in investment activities in Iran created pursuant to paragraph (b) of subdivision 3 of Section 165-a of the State Finance Law. In any case where the bidder or proposer cannot certify that they are not on such list, the bidder or proposer shall so state and shall furnish with the bid or proposal a signed statement which sets forth in detail the reasons why such statement cannot be made. The City of New York may award a bid to a bidder who cannot make the certification on a case by case basis if:

(1) The investment activities in Iran were made before the effective date of this section (i.e., April 12, 2012), the investment activities in Iran have not been expanded or renewed after the effective date of this section and the person has adopted, publicized and is implementing a formal plan to cease the investment activities in Iran and to refrain from engaging in any new investments in Iran: or

(2) The City makes a determination that the goods or services are necessary for the City to perform its functions and that, absent such an exemption, the City would be unable to obtain the goods or services for which the contract is offered. Such determination shall be made in writing and shall be a public document.

BIDDER'S CERTIFICATION OF COMPLIANCE WITH IRAN DIVESTMENT ACT

Pursuant to General Municipal Law §103-g, which generally prohibits the City from entering into contracts with persons engaged in investment activities in the energy sector of Iran, the bidder/proposer submits the following certification:

[*Please Check One*]

BIDDER'S CERTIFICATION

☒ By submission of this bid or proposal, each bidder/proposer and each person signing on behalf of any bidder/proposer certifies, and in the case of a joint bid each party thereto certifies as to its own organization, under penalty of perjury, that to the best of its knowledge and belief, that each bidder/proposer is not on the list created pursuant to paragraph (b) of subdivision 3 of Section 165-a of the State Finance Law.

☐ I am unable to certify that my name and the name of the bidder/proposer does not appear on the list created pursuant to paragraph (b) of subdivision 3 of Section 165-a of the State Finance Law. I have attached a signed statement setting forth in detail why I cannot so certify.

SIGNATURE

Michael Motisi

PRINTED NAME

Partner

TITLE

Sworn to before me this
14th day of March, 20 18

Elizabeth L

Notary Public

Dated:

Elizabeth Leichnam
Notary Public, State of New York
No. 01LE6004261
Qualified in Queens County
Commission Expires June 7, 2018

THE CITY OF NEW YORK
DEPARTMENT OF SMALL BUSINESS SERVICES
DIVISION OF LABOR SERVICES
CONTRACT COMPLIANCE UNIT
110 WILLIAMS STREET
NEW YORK, NEW YORK 10038
PHONE: (212) 513-6323
FAX: (212) 618-8879

CONSTRUCTION

EMPLOYMENT

REPORT

(NO TEXT ON THIS PAGE)

The City of New York
Department of Small Business Services
Division of Labor Services
Contract Compliance Unit
110 William Street
New York, New York 10038
Phone: (212) 513 – 6323
Fax: (212) 618-8879

CONSTRUCTION EMPLOYMENT REPORT INSTRUCTIONS

WHO MUST FILE A CONSTRUCTION EMPLOYMENT REPORT

A Construction Employment Report (ER) must be filed if you meet the following conditions:

CONTRACT FUNDING SOURCE	CONTRACTOR	CONTRACT VALUE	SUBMISSION REQUIREMENTS
Federal/Federally assisted	Prime and subcontractors	$10,000 or greater	Construction Employment Report
City and state funded	Prime contractor	$1,000,000 or greater	
	Subcontractor	$750,000 or greater	
		Less than $750,000	Less than $750,000 Certificate (City/State Only)

Prime Contractor:

- A general contractor or construction manager selected to perform work on a construction project funded (in whole or in part) by the federal government with a proposed contract value of $10,000 or more.
- A general contractor or construction manager selected to perform work on a construction project funded or assisted by the City of New York with a proposed contract value of $1,000,000 or more.

Subcontractor:

- A subcontractor selected to perform work on a construction project funded (in whole or in part) by the federal government with a proposed contract value of $10,000 or more.
- A subcontractor selected to perform work on a construction project funded or assisted by the City of New York with a proposed contract value of $750,000 or more.
- A subcontractor selected to perform work on a construction project funded or assisted by the City of New York with a proposed contract value of less than $750,000 must submit a "Less than $750,000" certificate.

WHERE TO FILE

Employment Reports must be filed with the City agency awarding the contract. If you are a contractor or subcontractor who will be working for a private developer in receipt of funding or assistance from the City, the ER must be filed with the City agency with jurisdiction over the developer's project.

DLS REVIEW PROCESS

In accordance with Executive Order 50 (EO 50), upon receipt by DLS of a completed ER, DLS conducts a review of the contractor's current employment policies, practices and procedures, as well as perform a statistical analysis of the contractor's workforce, if necessary. The process is as follows:

1. Within five (5) business days, DLS will review the ER for completeness and accuracy. If any information is omitted or incorrect, or if necessary documents are not submitted, the submission shall be deemed incomplete and DLS will inform the contractor. The substantive compliance review does not commence until the submission is complete. **An incomplete submission will delay the review process and may preclude or interrupt the contract approval.**

2. If the ER submission is complete, the compliance review will proceed, resulting in one of the following:

   Certificate of Approval
   The contractor is found to be in compliance with all applicable laws and regulations. The approval is valid for 36 months.

   Continued Approval Certificate
   The contractor has been issued a Certificate of Approval in the previous 36 months which is good for the applicable contract.

   Conditional Certificate of Compliance
   The contractor is required to take corrective actions in order to be in compliance with EO 50. The contractor must meet the conditions within one month of the issue of the Conditional Certificate.

   Determination of Nonperformance
   The contractor has failed to take the required corrective actions stipulated in the Conditional Certificate. A determination of nonperformance may prevent a contractor from receiving an award of a contract.

HOW TO COMPLETE THE EMPLOYMENT REPORT

Contents

General Information
Part I: Contractor/Subcontractor Information
Part II: Employment Policies and Practices
Part III: Contract Bid Information and Projected and Current Workforce Forms
Signature Page

PART I: CONTRACTOR/SUBCONTRACTOR INFORMATION

Questions 7 – 11: Please provide the required contact information for your company. All contracts must have a designated Equal Employment Officer.

Question 12: If you are a subcontractor, you must state the name of the contractor for whom you are providing the construction services.

Question 13: Please provide the number of permanent employees in your company.

Question 14a-g: The Project Identification Number (PIN) and the Contract Registration ID Number (CT#) can be obtained from the City agency. Provide a description of the trade work you will perform on this project and the address where the work will be performed. Subcontractors can obtain this information from the contract they have with the prime contractor.

Questions 15 – 18: If your company has received a valid Certificate of Approval within the past 36 months, been audited by the United States Department of Labor, Office of Federal Contract Compliance Programs (OFCCP), or if your company has submitted an ER for a different contract for which you have not yet received a compliance certificate, then you only need to complete and submit the following:

- General Information section
- Part I - Contractor/Subcontractor Information
- Form B - Projected Workforce
- Signature Page

If your company is currently waiting for an approval on another contract previously submitted, be certain to identify the date on which you submitted the completed Employment Report, the name of the City contracting agency with which the contract was made, and the name and telephone number of the person to whom the Employment Report was submitted.

If your company was issued a Conditional Certificate of Approval, all required corrective actions must have been taken or DLS will not issue a Continued Certificate.

Question 18: If the company was audited by the OFCCP, also provide the following:

- Identify the reviewing OFCCP office by its name and address
- If an unconditional certificate of compliance was issued by the OFCCP, attach a copy of the certificate in lieu of completing Parts II and III;
- Include copies of all corrective actions and documentation of OFCCP's performance; and
- Provide a copy of all stated OFCCP findings.

Question 19: Please provide a copy of any Collective Bargaining Agreement(s) which is negotiated through an employer trade association on behalf of your organization or any of its affiliates.

PART II: EMPLOYMENT POLICIES AND PRACTICES

Remember to label all documents with the question number for which they are submitted.

Questions 20a – j: You must respond to the questions as to whether or not your firm has documents reflecting written policies, benefits and procedures. If so, then you must identify by name each document in which the policy(ies), procedure(s) and benefit(s) is located and submit copies of all of the document(s). If your firm follows unwritten practices or procedures, include an explanation of how they operate. Please submit the most current document(s), including all applicable amendments. Label each document and/or unwritten practice according to the question to which it corresponds (e.g. 20a, 20b, etc.)

Questions 21a – h: Inquires about the manner/methods by which you comply with the requirements of the Immigration Reform and Control Act of 1986 (IRCA).

Question 22: Inquires into where and how I-9 forms are maintained and stored.

Questions 23a – e: Inquires into whether or not there is a requirement that an applicant or employee be subjected to a medical examination at any given time. Copes of the medical information questionnaire and instructions must be submitted with the Employment Report.

Question 24: Indicate the existence and location of all statements of your firm's Equal Employment Opportunity policy and attach a copy of each statement.

Question 25: Submit any current Affirmative Action Plan(s) created pursuant to Executive Order 11246.

Question 26: If your firm or collective bargaining agreement has an internal grievance procedure, indicate this and submit a copy of the policy and procedure. If unwritten, explain its nature and operation. Explain how your firm's procedure addresses EEO complaints.

Question 27: If your employees have used the procedure in the last three (3) years, please submit an explanation in the format indicated below:

1. Number of complaint(s)	2. Nature of the complaint(s)	3. Position(s) of the complainant(s)	4. Was an investigation conducted? Y/N	5. Current status of the disposition

Question 28: Indicate whether in the past three (3) years complaints have been filed with a court of law or administrative agency, naming your company as a defendant (or respondent) in a complaint alleging violation of any anti-discrimination or affirmative action laws. If yes, develop and submit a log to show, for each administrative/and or judicial action filed, the following information:

1. Name(s) of complainant(s)	2. Administrative agency or court in which action was filed	3. Nature of the complaint(s)	4. Current status	5. If not pending, the complaint's disposition

Question 29: Identify each job for which a physical qualification exists. Identify and explain the physical qualification(s) for each stated job. Submit job descriptions for each job and the reasons for the qualifications.

Question 30: Identify each job for which there exists any qualification related to age, race, color, national origin, sex, creed, disability, marital status, sexual orientation or citizenship status. Identify and explain the specific related qualification for each job stated. Submit job descriptions for each job and the reasons for the qualifications.

PART III: CONTRACT BID INFORMATION AND PROJECTED AND CURRENT WORKFORCE FORMS

FORM A: CONTRACT BID INFORMATION – USE OF SUBCONTRACTORS/TRADES

Your projections for the utilization of subcontractors on the proposed contract are to be provided in this section. A chart has been provided for the identification of subcontractors. Information is to be provided to the extent known at the time the ER is filed for review by DLS. If the subcontractor's name is unknown, then write "unknown". Under "ownership", enter the appropriate race/ethnic and gender code. If the contract is federally funded or assisted and the subcontractor is being utilized in accordance with applicable federal requirements with respect to Minority Business Enterprise or Woman Business Enterprise requirements, enter the appropriate code. This will also apply to state funded contracts with similar requirements for minority and female owned businesses.

FORM B: PROJECTED WORKFORCE FOR WORK TO BE PERFORMED ON THIS PROJECT

For each trade to be engaged by your company for this project, enter the projected workforce for Males and Females by trade classification in the charts provided.

FORM C: CURRENT WORKFORCE FOR WORK TO BE PERFORMED ON THIS PROJECT

For each trade *currently* engaged by your company for all work performed in NYC, enter the current workforce for Males and Females by trade classification in the charts provided.

SIGNATURE PAGE

The signatory of this Employment Report and all other documents submitted to DLS must be an official authorized to enter into a binding legal agreement. The signature page must be completed in its entirety and notarized. Only original signatures will be accepted.

The City of New York Department of Small Business Services
Division of Labor Services Contract Compliance Unit
110 William Street, New York, New York 10038
Phone: (212) 513 - 6323
Fax: (212) 618-8879

CONSTRUCTION EMPLOYMENT REPORT

GENERAL INFORMATION

1. Your contractual relationship in this contract is: Prime contractor X Subcontractor x

1a. Are M/WBE goals attached to this project? Yes X No ____

2. Please check one of the following if your firm would like information on how to certify with the City of New York as a:

___Minority Owned Business Enterprise
___Women Owned Business Enterprise
___Disadvantaged Business Enterprise
___Locally Based Business Enterprise
___Emerging Business Enterprise

2a. If you are certified as an **MBE**, **WBE**, **LBE**, **EBE** or **DBE**, what city/state agency are you certified with? _____ Are you DBE certified? Yes ____ No ____

3. Please indicate if you would like assistance from SBS in identifying certified M/WBEs for contracting opportunities: Yes X No___

4. Is this project subject to a project labor agreement? Yes ____ No X

5. Are you a Union contractor? Yes X No ____ If yes, please list which local(s) you affiliated with 731, 1010, 1556, 14, 15

6. Are you a Veteran owned company? Yes ____ No X

PART I: CONTRACTOR/SUBCONTRACTOR INFORMATION

7. 47-1391529 — mmutino@intercontractingcorp.com
Employer Identification Number or Federal Tax I.D. — Email Address

8. Inter LaPenta JV
Company Name

9. 35 Colonial Pl., Mount Vernon, NY 10550
Company Address and Zip Code

10. Michael Mutino — 914.863.0000
Chief Operating Officer — Telephone Number

11. Same
Designated Equal Opportunity Compliance Officer — Telephone Number
(If same as Item #10, write "same")

12. Same
Name of Prime Contractor and Contact Person
(If same as Item #8, write "same")

13. Number of employees in your company: 30

14. Contract information:

(a) DDC
Contracting Agency (City Agency)

(b) 8,995,015.35
Contract Amount

(c) 85020185E0015C
Procurement Identification Number (PIN)

(d) _____
Contract Registration Number (CT#)

(e) 9/18
Projected Commencement Date

(f) 9/19
Projected Completion Date

(g) Description and location of proposed contract:

Construction of Sewers in 239th Street, Queens

15. Has your firm been reviewed by the Division of Labor Services (DLS) within the past 36 months and issued a Certificate of Approval? Yes X No___

If yes, attach a copy of certificate.

16. Has DLS within the past month reviewed an Employment Report submission for your company and issued a Conditional Certificate of Approval? Yes___ No X

If yes, attach a copy of certificate.

NOTE: DLS WILL NOT ISSUE A CONTINUED CERTIFICATE OF APPROVAL IN CONNECTION WITH THIS CONTRACT UNLESS THE REQUIRED CORRECTIVE ACTIONS IN PRIOR CONDITIONAL CERTIFICATES OF APPROVAL HAVE BEEN TAKEN.

17. Has an Employment Report already been submitted for a different contract (not covered by this Employment Report) for which you have not yet received compliance certificate?
Yes___ No X If yes,

Date submitted: _____
Agency to which submitted: _____
Name of Agency Person: _____
Contract No: _____
Telephone: _____

18. Has your company in the past 36 months been audited by the United States Department of Labor, Office of Federal Contract Compliance Programs (OFCCP)? Yes___ No X

If yes,

(a) Name and address of OFCCP office.

_____

_____

(b) Was a Certificate of Equal Employment Compliance issued within the past 36 months? Yes___ No X

If yes, attach a copy of such certificate.

(c) Were any corrective actions required or agreed to? Yes___ No___

If yes, attach a copy of such requirements or agreements.

(d) Were any deficiencies found? Yes___ No___

If yes, attach a copy of such findings.

19. Is your company or its affiliates a member or members of an employers' trade association which is responsible for negotiating collective bargaining agreements (CBA) which affect construction site hiring? Yes___ No X

If yes, attach a list of such associations and all applicable CBA's.

PART II: DOCUMENTS REQUIRED

20. For the following policies or practices, attach the relevant documents (e.g., printed booklets, brochures, manuals, memoranda, etc.). If the policy(ies) are unwritten, attach a full explanation of the practices. See instructions.

___ (a) Health benefit coverage/description(s) for all management, nonunion and union employees (whether company or union administered)

___ (b) Disability, life, other insurance coverage/description

___ (c) Employee Policy/Handbook

___ (d) Personnel Policy/Manual

___ (e) Supervisor's Policy/Manual

___ (f) Pension plan or 401k coverage/description for all management, nonunion and union employees, whether company or union administered

___ (g) Collective bargaining agreement(s).

___ (h) Employment Application(s)

___ (i) Employee evaluation policy/form(s).

___ (j) Does your firm have medical and/or non-medical (i.e. education, military, personal, pregnancy, child care) leave policy?

21. To comply with the Immigration Reform and Control Act of 1986 when and of whom does your firm require the completion of an I-9 Form?

(a) Prior to job offer	Yes___	No___
(b) After a conditional job offer	Yes___	No___
(c) After a job offer	Yes X	No___
(d) Within the first three days on the job	Yes X	No___
(e) To some applicants	Yes___	No___
(f) To all applicants	Yes___	No___
(g) To some employees	Yes___	No___
(h) To all employees	Yes X	No___

22. Explain where and how completed I-9 Forms, with their supportive documentation, are maintained and made accessible.

Kept in home office and accessible upon request.

23. Does your firm or any of its collective bargaining agreements require job applicants to take a medical examination? Yes___ No___

If yes, is the medical examination given:

(a) Prior to a job offer	Yes___	No___
(b) After a conditional job offer	Yes___	No___
(c) After a job offer	Yes___	No___
(d) To all applicants	Yes___	No___
(e) Only to some applicants	Yes___	No___

If yes, list for which applicants below and attach copies of all medical examination or questionnaire forms and instructions utilized for these examinations.

24. Do you have a written equal employment opportunity (EEO) policy? Yes___ No___

If yes, list the document(s) and page number(s) where these written policies are located.

25. Does the company have a current affirmative action plan(s) (AAP)

_____Minorities and Women
_____Individuals with handicaps
_____Other. Please specify _____

26. Does your firm or collective bargaining agreement(s) have an internal grievance procedure with respect to EEO complaints? Yes X No___

If yes, please attach a copy of this policy.

If no, attach a report detailing your firm's unwritten procedure for handling EEO complaints.

27. Has any employee, within the past three years, filed a complaint pursuant to an internal grievance procedure or with any official of your firm with respect to equal employment opportunity? Yes___ No X

If yes, attach an internal complaint log. See instructions.

28. Has your firm, within the past three years, been named as a defendant (or respondent) in any administrative or judicial action where the complainant (plaintiff) alleged violation of any anti-discrimination or affirmative action laws? Yes___ No X

If yes, attach a log. See instructions.

29. Are there any jobs for which there are physical qualifications? Yes X No___

If yes, list the job(s), submit a job description and state the reason(s) for the qualification(s).
Laborers must be adequately strong to lift heavy objects.

30. Are there any jobs for which there are age, race, color, national origin, sex, creed, disability, marital status, sexual orientation, or citizenship qualifications? Yes___ No X

If yes, list the job(s), submit a job description and state the reason(s) for the qualification(s).

SIGNATURE PAGE

I, (print name of authorized official signing) Michael Molina hereby certify that the information submitted herewith is true and complete to the best of my knowledge and belief and submitted with the understanding that compliance with New York City's equal employment requirements, as contained in Chapter 56 of the City Charter, Executive Order No. 50 (1980), as amended, and the implementing Rules and Regulations, is a contractual obligation. I also agree on behalf of the company to submit a certified copy of payroll records to the Division of Labor Services on a monthly basis.

Inter La Perla JV

Contractor's Name

Michael Molina — Partner

Name of person who prepared this Employment Report — Title

Same

Name of official authorized to sign on behalf of the contractor — Title

914.863.0000

Telephone Number

Signature of authorized official — 3/14/18 Date

If contractors are found to be underutilizing minorities and females in any given trade based on Chapter 56 Section 3H, the Division of Labor Services reserves the right to request the contractor's workforce data and to implement an employment program.

Contractors who fail to comply with the above mentioned requirements or are found to be in noncompliance may be subject to the withholding of final payment.

Willful or fraudulent falsifications of any data or information submitted herewith may result in the termination of the contract between the City and the bidder or contractor and in disapproval of future contracts for a period of up to five years. Further, such falsification may result in civil and/and or criminal prosecution.

To the extent permitted by law and consistent with the proper discharge of DLS' responsibilities under Charter Chapter 56 of the City Charter and Executive Order No. 50 (1980) and the implementing Rules and Regulations, all information provided by a contractor to DLS shall be confidential.

Only original signatures accepted.

Sworn to before me this 14th day of March 20 18

Elizabeth L — March 14, 2018

Notary Public — Authorized Signature — Date

Elizabeth Leichnam
Notary Public, State of New York
No. 01LE6004261
Qualified in Queens County
Commission Expires June 7, 2018

FORM A. CONTRACT BID INFORMATION: USE OF SUBCONTRACTORS/TRADES

1. Do you plan to subcontractor work on this contract? Yes ✓ No___

2. If yes, complete the chart below.

NOTE: All proposed subcontractors with a subcontract in excess of $750,000 must complete an Employment Report for review and approval before the contract may be awarded and work commences.

SUBCONTRACTOR'S NAME*	OWNERSHIP (ENTER APPROPRIATE CODE LETTERS BELOW)	WORK TO BE PERFORMED BY SUBCONTRACTOR	TRADE PROJECTED FOR USE BY SUBCONTRACTOR	PROJECTED DOLLAR VALUE OF SUBCONTRACT
		Paving	Laborers, Operators	$200,000
		Sawcutting	Laborers	$50,000
		Tree Work	Laborers	$34,000

***If subcontractor is presently unknown, please enter the trade (craft name).**

OWNERSHIP CODES
- W: White
- B: Black
- H: Hispanic
- A: Asian
- N: Native American
- F: Female

FOR OFFICIAL USE ONLY: File No._____

FORM B: PROJECTED WORKFORCE

TRADE CLASSIFICATION CODES

(J) Journeylevel Workers
(H) Helper
(TOT) Total by Column
(A) Apprentice
(TRN) Trainee

For each trade to be engaged by your company for this project, enter the projected workforce for Males and Females by trade classification on the charts below.

Trade: Laborers

Union Affiliation, if applicable: 731, 1010, 1556

Total (Col. #1-10): 11

Total Minority, Male & Female (Col. #2,3,4,5,7,8,9, & 10): 10

Total Female (Col. #6 – 10): 0

	MALES					FEMALES				
	(1) White Non Hisp.	(2) Black Non Hisp.	(3) Hisp.	(4) Asian	(5) Native Amer.	(6) White Non Hisp.	(7) Black Non Hisp.	(8) Hisp.	(9) Asian	(10) Native Amer.
J	1		9	1						
H										
A										
TRN										
TOT	1		9	1						

What are the recruitment sources for you projected hires (i.e., unions, government employment office, job tap center, community outreach)?

Unions

FOR OFFICIAL USE ONLY: File No.

FORM B: PROJECTED WORKFORCE

Trade: Operators

Union Affiliation, if applicable: 14, 15

Total (Col. #1-10): 2

Total Minority, Male & Female (Col. #2,3,4,5,7,8,9, & 10): 1

Total Female (Col. #6 – 10): 0

	MALES					FEMALES				
	(1) White Non Hisp.	(2) Black Non Hisp.	(3) Hisp.	(4) Asian	(5) Native Amer.	(6) White Non Hisp.	(7) Black Non Hisp.	(8) Hisp.	(9) Asian	(10) Native Amer.
J	1		1							
H										
A										
TRN										
TOT	1		1							

What are the recruitment sources for you projected hires (i.e., unions, government employment office, job tap center, community outreach)?

Unions

FOR OFFICIAL USE ONLY: File No._____

Inter LaPeruta JV
274 White Plains Road, Suite 6
Eastchester, NY 10709
914.337.1350
Fax 914.337.1450

EEO POLICY

It is the policy of Inter LaPeruta JV not to discriminate against any employee or applicant for employment because of race, creed, color, national origin, sex, age, disability, marital status, sexual orientation or citizenship status. We will take specific action to ensure that applicants are employed and that employees are treated during employment, without regard to their race, creed, color, national origin, sex, age, disability, marital status, sexual orientation or citizenship status. Such action shall include, but not be limited to the following: recruitment, hiring, compensation, training and apprenticeship, promotion, upgrading, demotion, downgrading, transfer, lay-off and termination, and all other Terms and Conditions of Employment except as provided by the law.

careers
businesses
neighborhoods

Small Business Services

Gregg Bishop
Commissioner

218CY137

April 4, 2018

Mr. Michael Mutino
Inter Laperuta JV
35 Colonial Place
Mount Vernon, NY 10550

RE: **NYC Department of Design and Construction Contract (DDC)**; Project No. SEQ200531; Pin No. 8502018SE0015C; Storm sewer extensions in 239th Street between 87th Avenue and 88th Avenue, etc.; Borough of Queens; Contract Value: $8,995,015.35; **Certificate of Approval.**

Dear Mr. Mutino:

The Department of Small Business Services/Division of Labor Services (DLS) has concluded that Inter Laperuta JV meets the equal employment opportunity requirements of the City of New York, as stated in Executive Order No. 50 (1980) as amended (E.O. 50), its implementing Rules (Rules), and Chapter 56 of the City Charter (Chapter 56). Consequently, DLS has notified (**DDC**) of this determination.

Contingent upon Inter Laperuta JV's ongoing compliance with E.O. 50 and Chapter 56, this approval shall be effective or the three (**3**) year period commencing on **April 4, 2018** and terminating on **April 3, 2021. This determination for a three-year approval only exempts contractors from completing the policy and procedure section of the Employment Report on future contracts within this three-year period.** However, a Construction Employment Report must be submitted for each new project. In addition, Inter Laperuta JV must regularly submit the **Monthly Workforce Utilization Table and Monthly Payroll Records as explained during the Pre-Award Conference on April 3, 2018.**

It is important that Inter Laperuta JV as a New York City contractor provide equal employment opportunity for all employees and applicants for employment.

Please direct all correspondence to Ms. Rosalyn Dawson, Project Manager. Should you have any questions regarding this letter, you may call Ms. Dawson at (212) 618-8843 or e-mail her at **rdawson@sbs.nyc.gov**.

Very truly yours,

Helen Wilson
Assistant Commissioner
Division of Labor Services

cc: Chinwee Summors (DDC
Lorraine Holley (DDC)
Michael Shipman (DDC)
Rosalyn Dawson
File

The City of New York Department of Small Business Services
Division of Labor Services Contract Compliance Unit
110 William Street, New York, New York 10038
Phone: (212) 513 - 6323
Fax: (212) 618-8879

CONSTRUCTION EMPLOYMENT REPORT

GENERAL INFORMATION

1. Your contractual relationship in this contract is: Prime contractor___ Subcontractor_x_

1a. Are M/WBE goals attached to this project? Yes ____ No ____

2. Please check one of the following if your firm would like information on how to certify with the City of New York as a:

___Minority Owned Business Enterprise
___Women Owned Business Enterprise
___Disadvantaged Business Enterprise
___Locally Based Business Enterprise
___Emerging Business Enterprise

2a. If you are certified as an **MBE, WBE, LBE, EBE** or **DBE**, what city/state agency are you certified with? _____ Are you DBE certified? Yes ____ No ____

3. Please indicate if you would like assistance from SBS in identifying certified M/WBEs for contracting opportunities: Yes___ No___

4. Is this project subject to a project labor agreement? Yes ____ No ____

5. Are you a Union contractor? Yes ____ No ____ If yes, please list which local(s) you affiliated with _____

6. Are you a Veteran owned company? Yes ____ No ____

PART I: CONTRACTOR/SUBCONTRACTOR INFORMATION

7. _____
Employer Identification Number or Federal Tax I.D. Email Address

8. _____
Company Name

9. _____
Company Address and Zip Code

10. _____
Chief Operating Officer Telephone Number

11. _____
Designated Equal Opportunity Compliance Officer Telephone Number
(If same as Item #10, write "same")

12. _____
Name of Prime Contractor and Contact Person
(If same as Item #8, write "same")

13. Number of employees in your company: _____

14. Contract information:

(a) _____
Contracting Agency (City Agency)

(b) _____
Contract Amount

(c) _____
Procurement Identification Number (PIN)

(d) _____
Contract Registration Number (CT#)

(e) _____
Projected Commencement Date

(f) _____
Projected Completion Date

(g) Description and location of proposed contract:

_____

_____

15. Has your firm been reviewed by the Division of Labor Services (DLS) within the past 36 months and issued a Certificate of Approval? Yes___ No___

If yes, attach a copy of certificate.

16. Has DLS within the past month reviewed an Employment Report submission for your company and issued a Conditional Certificate of Approval? Yes___ No___

If yes, attach a copy of certificate.

NOTE: DLS WILL NOT ISSUE A CONTINUED CERTIFICATE OF APPROVAL IN CONNECTION WITH THIS CONTRACT UNLESS THE REQUIRED CORRECTIVE ACTIONS IN PRIOR CONDITIONAL CERTIFICATES OF APPROVAL HAVE BEEN TAKEN.

17. Has an Employment Report already been submitted for a different contract (not covered by this Employment Report) for which you have not yet received compliance certificate?
Yes___ No___ If yes,

Date submitted: _____
Agency to which submitted: _____
Name of Agency Person: _____
Contract No: _____
Telephone: _____

18. Has your company in the past 36 months been audited by the United States Department of Labor, Office of Federal Contract Compliance Programs (OFCCP)? Yes___ No___

If yes,

FOR OFFICIAL USE ONLY: File No._____

(a) Name and address of OFCCP office.

_____

_____

(b) Was a Certificate of Equal Employment Compliance issued within the past 36 months? Yes___ No___

If yes, attach a copy of such certificate.

(c) Were any corrective actions required or agreed to? Yes___ No___

If yes, attach a copy of such requirements or agreements.

(d) Were any deficiencies found? Yes___ No___

If yes, attach a copy of such findings.

19. Is your company or its affiliates a member or members of an employers' trade association which is responsible for negotiating collective bargaining agreements (CBA) which affect construction site hiring? Yes___ No___

If yes, attach a list of such associations and all applicable CBA's.

PART II: DOCUMENTS REQUIRED

20. For the following policies or practices, attach the relevant documents (e.g., printed booklets, brochures, manuals, memoranda, etc.). If the policy(ies) are unwritten, attach a full explanation of the practices. See instructions.

___ (a) Health benefit coverage/description(s) for all management, nonunion and union employees (whether company or union administered)

___ (b) Disability, life, other insurance coverage/description

___ (c) Employee Policy/Handbook

___ (d) Personnel Policy/Manual

___ (e) Supervisor's Policy/Manual

___ (f) Pension plan or 401k coverage/description for all management, nonunion and union employees, whether company or union administered

___ (g) Collective bargaining agreement(s).

___ (h) Employment Application(s)

___ (i) Employee evaluation policy/form(s).

___ (j) Does your firm have medical and/or non-medical (i.e. education, military, personal, pregnancy, child care) leave policy?

21. To comply with the Immigration Reform and Control Act of 1986 when and of whom does your firm require the completion of an I-9 Form?

(a) Prior to job offer Yes___ No___
(b) After a conditional job offer Yes___ No___
(c) After a job offer Yes___ No___
(d) Within the first three days on the job Yes___ No___
(e) To some applicants Yes___ No___
(f) To all applicants Yes___ No___
(g) To some employees Yes___ No___
(h) To all employees Yes___ No___

22. Explain where and how completed I-9 Forms, with their supportive documentation, are maintained and made accessible.

_____

_____

23. Does your firm or any of its collective bargaining agreements require job applicants to take a medical examination? Yes___ No___

If yes, is the medical examination given:

(a) Prior to a job offer Yes___ No___
(b) After a conditional job offer Yes___ No___
(c) After a job offer Yes___ No___
(d) To all applicants Yes___ No___
(e) Only to some applicants Yes___ No___

If yes, list for which applicants below and attach copies of all medical examination or questionnaire forms and instructions utilized for these examinations.

_____

_____

24. Do you have a written equal employment opportunity (EEO) policy? Yes___ No___

If yes, list the document(s) and page number(s) where these written policies are located.

_____

_____

25. Does the company have a current affirmative action plan(s) (AAP)
_____Minorities and Women
_____Individuals with handicaps
_____Other. Please specify _____

26. Does your firm or collective bargaining agreement(s) have an internal grievance procedure with respect to EEO complaints? Yes___ No___

If yes, please attach a copy of this policy.

If no, attach a report detailing your firm's unwritten procedure for handling EEO complaints.

27. Has any employee, within the past three years, filed a complaint pursuant to an internal grievance procedure or with any official of your firm with respect to equal employment opportunity? Yes___ No___

If yes, attach an internal complaint log. See instructions.

28. Has your firm, within the past three years, been named as a defendant (or respondent) in any administrative or judicial action where the complainant (plaintiff) alleged violation of any anti-discrimination or affirmative action laws? Yes___ No___

If yes, attach a log. See instructions.

29. Are there any jobs for which there are physical qualifications? Yes___ No___

If yes, list the job(s), submit a job description and state the reason(s) for the qualification(s).

_____

_____

30. Are there any jobs for which there are age, race, color, national origin, sex, creed, disability, marital status, sexual orientation, or citizenship qualifications? Yes___ No___

If yes, list the job(s), submit a job description and state the reason(s) for the qualification(s).

_____

_____

FOR OFFICIAL USE ONLY: File No._____

SIGNATURE PAGE

I, (print name of authorized official signing)_____ hereby certify that the information submitted herewith is true and complete to the best of my knowledge and belief and submitted with the understanding that compliance with New York City's equal employment requirements, as contained in Chapter 56 of the City Charter, Executive Order No. 50 (1980), as amended, and the implementing Rules and Regulations, is a contractual obligation. I also agree on behalf of the company to submit a certified copy of payroll records to the Division of Labor Services on a monthly basis.

_____

Contractor's Name

_____

Name of person who prepared this Employment Report Title

_____

Name of official authorized to sign on behalf of the contractor Title

_____

Telephone Number

_____

Signature of authorized official Date

If contractors are found to be underutilizing minorities and females in any given trade based on Chapter 56 Section 3H, the Division of Labor Services reserves the right to request the contractor's workforce data and to implement an employment program.

Contractors who fail to comply with the above mentioned requirements or are found to be in noncompliance may be subject to the withholding of final payment.

Willful or fraudulent falsifications of any data or information submitted herewith may result in the termination of the contract between the City and the bidder or contractor and in disapproval of future contracts for a period of up to five years. Further, such falsification may result in civil and/and or criminal prosecution.

To the extent permitted by law and consistent with the proper discharge of DLS' responsibilities under Charter Chapter 56 of the City Charter and Executive Order No. 50 (1980) and the implementing Rules and Regulations, all information provided by a contractor to DLS shall be confidential.

Only original signatures accepted.

Sworn to before me this _____ day of _____ 20 _____

_____

Notary Public Authorized Signature Date

FOR OFFICIAL USE ONLY: File No._____

FORM A

CONTRACT BID INFORMATION: USE OF SUBCONTRACTORS/TRADES

1. Do you plan to subcontractor work on this contract? Yes___ No___

2. If yes, complete the chart below.

NOTE: All proposed subcontractors with a subcontract in excess of $750,000 must complete an Employment Report for review and approval before the contract may be awarded and work commences.

SUBCONTRACTOR'S NAME*	OWNERSHIP (ENTER APPROPRIATE CODE LETTERS BELOW)	WORK TO BE PERFORMED BY SUBCONTRACTOR	TRADE PROJECTED FOR USE BY SUBCONTRACTOR	PROJECTED DOLLAR VALUE OF SUBCONTRACT

***If subcontractor is presently unknown, please enter the trade (craft name).**

OWNERSHIP CODES
- W: White
- B: Black
- H: Hispanic
- A: Asian
- N: Native American
- F: Female

FOR OFFICIAL USE ONLY: File No._____

FORM B: PROJECTED WORKFORCE

TRADE CLASSIFICATION CODES

(J) Journeylevel Workers
(H) Helper
(TOT) Total by Column
(A) Apprentice
(TRN) Trainee

For each trade to be engaged by your company for this project, enter the projected workforce for Males and Females by trade classification on the charts below.

Trade: _____

Union Affiliation, if applicable _____

Total (Col. #1-10): _____

Total Minority, Male & Female (Col. #2,3,4,5,7,8,9, & 10): _____

Total Female (Col. #6 – 10): _____

	MALES					FEMALES				
	(1) White Non Hisp.	(2) Black Non Hisp.	(3) Hisp.	(4) Asian	(5) Native Amer.	(6) White Non Hisp.	(7) Black Non Hisp.	(8) Hisp.	(9) Asian	(10) Native Amer.
J										
H										
A										
TRN										
TOT										

What are the recruitment sources for you projected hires (i.e., unions, government employment office, job tap center, community outreach)?

_____

_____

FOR OFFICIAL USE ONLY: File No._____

FORM B: PROJECTED WORKFORCE

Trade: _____

Union Affiliation, if applicable _____

Total (Col. #1-10): _____

Total Minority, Male & Female (Col. #2,3,4,5,7,8,9, & 10): _____

Total Female (Col. #6 – 10): _____

	MALES					FEMALES				
	(1) White Non Hisp.	(2) Black Non Hisp.	(3) Hisp.	(4) Asian	(5) Native Amer.	(6) White Non Hisp.	(7) Black Non Hisp.	(8) Hisp.	(9) Asian	(10) Native Amer.
J										
H										
A										
TRN										
TOT										

What are the recruitment sources for you projected hires (i.e., unions, government employment office, job tap center, community outreach)?

_____

_____

FOR OFFICIAL USE ONLY: File No._____

FORM C: CURRENT WORKFORCE

TRADE CLASSIFICATION CODES

(J) Journeylevel Workers
(H) Helper
(TOT) Total by Column
(A) Apprentice
(TRN) Trainee

For each trade currently engaged by your company for all work performed in New York City, enter the current workforce for Males and Females by trade classification on the charts below.

Trade: _____

Union Affiliation, if applicable _____

Total (Col. #1-10): _____

Total Minority, Male & Female (Col. #2,3,4,5,7,8,9, & 10): _____

Total Female (Col. #6 – 10): _____

	MALES					FEMALES				
	(1) White Non Hisp.	(2) Black Non Hisp.	(3) Hisp.	(4) Asian	(5) Native Amer.	(6) White Non Hisp.	(7) Black Non Hisp.	(8) Hisp.	(9) Asian	(10) Native Amer.
J										
H										
A										
TRN										
TOT										

What are the recruitment sources for you projected hires (i.e., unions, government employment office, job tap center, community outreach)?

_____

_____

FOR OFFICIAL USE ONLY: File No._____

FORM C: CURRENT WORKFORCE

Trade: _____

Union Affiliation, if applicable _____

Total (Col. #1-10): _____

Total Minority, Male & Female (Col. #2,3,4,5,7,8,9, & 10): _____

Total Female (Col. #6 – 10): _____

	MALES					FEMALES				
	(1) White Non Hisp.	(2) Black Non Hisp.	(3) Hisp.	(4) Asian	(5) Native Amer.	(6) White Non Hisp.	(7) Black Non Hisp.	(8) Hisp.	(9) Asian	(10) Native Amer.
J										
H										
A										
TRN										
TOT										

What are the recruitment sources for you projected hires (i.e., unions, government employment office, job tap center, community outreach)?

_____

_____

FOR OFFICIAL USE ONLY: File No._____

(NO TEXT ON THIS PAGE)

The City of New York Department of Small Business Services
Division of Labor Services Contract Compliance Unit
110 William Street, New York, New York 10038
Phone: (212) 513 – 6323 Fax: (212) 618-8879

Date _____ File Number _____

LESS THAN $750,000 SUBCONTRACT CERTIFICATE
(CITY, STATE AND ICIP ONLY)

Are you currently certified as one of the following? Please check yes or no:

MBE Yes ___ No ___ WBE Yes ___ No ___ LBE Yes ___ No ___

DBE Yes ___ No ___ EBE Yes ___ No ___

If you are certified as an MBE, WBE, LBE, EBE or DBE, what city/state agency are you certified with?

_____

Please check one of the following if your firm would like information on how to certify with the City of New York as a:

___Minority Owned Business Enterprise ___Locally based Business Enterprise

___Women Owned Business Enterprise ___Emerging Business Enterprise

___Disadvantaged Business Enterprise

_____
Company Name Employer Identification Number or Federal Tax I.D

_____
Company Address and Zip Code

_____
Contact Person (First Name, Last Name) Telephone Number

_____
Fax Number E-mail Address

Description and location of proposed subcontract: _____

_____

_____

Are you a Union contractor? Yes ____ No ____ If yes, please list which local(s) you affiliated with

_____

Are you a Veteran owned company? Yes ____ No ____

_____ _____
Procurement Identification Number (PIN) Contract Registration Number (CT#)
(City contracts only) (City contracts only)

Revised 8/13
FOR OFFICIAL USE ONLY: File No. _____

Block and Lot Number
(ICIP projects only)

Contract Amount

I, (print name of authorized official signing)_____ hereby certify that I am authorized by the above-named subcontractor to certify that said subcontractor's proposed contract with the above named owner or City agency is less than $750,000. This affirmation is made in accordance with NYC Charter Chapter 56, Executive Order No. 50 (1980) and the implementing Rules.

Willful or fraudulent falsifications of any data or information submitted herewith may result in the termination of the contract between the City and the bidder or contractor and in disapproval of future contracts for a period of up to five years. Further, such falsification may result in civil and/and or criminal prosecution.

Signature of authorized official

Date

[redacted]

FOR OFFICIAL USE ONLY: File No._____

ATTACH TO CONTRACT DOCUMENTS
THE CITY OF NEW YORK
DEPARTMENT OF DESIGN AND CONSTRUCTION
INFRASTRUCTURE DIVISION
BUREAU OF DESIGN
PROJECT ID: SEQ200531

STORM SEWER EXTENSIONS
IN 239TH STREET BETWEEN 87TH AVENUE AND 88TH AVENUE
IN 87TH AVENUE BETWEEN CROSS ISLAND PARKWAY AND 239TH STREET
IN CROSS ISLAND PARKWAY WEST SERVICE ROAD BETWEEN 90TH AVENUE AND 87TH AVENUE

INCLUDING WATER MAIN WORK

Together With All Work Incidental Thereto
BOROUGH OF QUEENS
CITY OF NEW YORK
ADDENDUM NO. 1

DATED: FEBRUARY 1, 2018

THIS ADDENDUM IS HEREBY MADE A PART OF THE CONTRACT DOCUMENTS

(1) For additional information, see the attached ONE (1) page of "Questions Submitted by Bidders and DDC's Responses".

END OF ADDENDUM NO. 1

By signing in the space provided below, the bidder acknowledges receipt of this Addendum consisting of one (1) page and attachment consisting of one (1) page

THIS ADDENDUM MUST BE SIGNED BY ALL BIDDERS AND ATTACHED TO THEIR BID

G. Saini

GURDIP SAINI, P.E.
Associate Commissioner/Design I

Inter LaPenta JV
Name of Bidder

By:

Questions Submitted by Bidders and DDC's Responses

QUESTION #1:

We are having trouble to obtain some information for Project SEQ200531, Specifically we are looking for the standard drawings describing the type of work referred to as Green Infrastructure Bioswales: Type 2GS, Type 2H, Type 1H and Type 2.

DDC'S RESPONSE:

- Type 1, 2, and 3 refer to the variations in length of each R.O.W. bioswale.
- The "H" refers to a Hydrologically connected R.O.W. bioswale.
- Type 2 is a standard type of R.O.W. biowale.

All of these designs types can all be reference here:
http://www.nyc.gov/html/dep/pdf/green_infrastructure/bioswales-standard-designs.pdf

ATTACH TO CONTRACT DOCUMENTS
THE CITY OF NEW YORK
DEPARTMENT OF DESIGN AND CONSTRUCTION
INFRASTRUCTURE DIVISION
BUREAU OF DESIGN
PROJECT ID: SEQ200531

STORM SEWER EXTENSIONS
IN 239TH STREET BETWEEN 87TH AVENUE AND 88TH AVENUE
IN 87TH AVENUE BETWEEN CROSS ISLAND PARKWAY AND 239TH STREET
IN CROSS ISLAND PARKWAY WEST SERVICE ROAD BETWEEN 90TH AVENUE AND 87TH AVENUE

INCLUDING WATER MAIN WORK

Together With All Work Incidental Thereto
BOROUGH OF QUEENS
CITY OF NEW YORK
ADDENDUM NO. 2

DATED: FEBRUARY 5, 2018

THIS ADDENDUM IS HEREBY MADE A PART OF THE CONTRACT DOCUMENTS

(1) **Refer** to the Bid and Contract Documents, VOLUME 1 OF 3, M/WBE PROGRAM, page 13;
Delete the page in its entirety;
Substitute attached revised page 13R.

END OF ADDENDUM NO. 2

By signing in the space provided below, the bidder acknowledges receipt of this Addendum consisting of one (1) page and attachment consisting of one (1) page

THIS ADDENDUM MUST BE SIGNED BY ALL BIDDERS AND ATTACHED TO THEIR BID

G. Saini
GURDIP SAINI, P.E.
Associate Commissioner/Design I

Inter Valerio JV
Name of Bidder

By:

Tax ID #: _____ APT E-PIN #: 8508B0059

SCHEDULE B – M/WBE Utilization Plan
Part I: M/WBE Participation Goals

Part I to be completed by contracting agency

Contract Overview

APT E- Pin #	8508B0059	**FMS Project ID#:**	SEQ200531
Project Title/ Agency PIN #	STORM SEWER EXTENSIONS INCLUDING WATER MAIN WORK IN 239TH STREET BETWEEN 87TH AVENUE AND 88TH AVENUE ETC., /8502018SE0015C		
Bid/Proposal Response Date	FEBRUARY 15, 2018		
Contracting Agency	Department of Design and Construction		
Agency Address	30-30 Thomson Ave. **City** Long Island City **State** NY **Zip Code** 11101		
Contact Person	Emmanuel K. Charles	**Title**	MWBE Compliance Analyst
Telephone #	(718) 391-1450	**Email**	charlesem@ddc.nyc.gov

Project Description *(attach additional pages if necessary)*

PROJECT ID: SEQ200531

STORM SEWER EXTENSIONS

IN 239TH STREET BETWEEN 87TH AVENUE AND 88TH AVENUE
IN 87TH AVENUE BETWEEN CROSS ISLAND PARKWAY AND 239TH STREET
IN CROSS ISLAND PARKWAY WEST SERVICE ROAD BETWEEN 90TH AVENUE AND 87TH AVENUE

CAPITAL PROJECT WM-1

WATER MAIN WORK

IN 239TH STREET BETWEEN 87TH AVENUE AND 88TH AVENUE
IN 87TH AVENUE BETWEEN CROSS ISLAND PARKWAY AND 239TH STREET
IN CROSS ISLAND PARKWAY WEST SERVICE ROAD BETWEEN 90TH AVENUE AND 87TH AVENUE
Together With All Work Incidental Thereto
BOROUGH OF QUEENS
CITY OF NEW YORK

M/WBE Participation Goals for Services
Enter the percentage amount for each group or for an unspecified goal. Please note that there are no goals for Asian Americans in Professional Services.

Prime Contract Industry: Construction

Group	Percentage	
Unspecified*	**9 %**	
or		
Black American	**UNSPECIFIED***	
Hispanic American	**UNSPECIFIED***	
Asian American	**UNSPECIFIED***	
Women	**UNSPECIFIED***	
Total Participation Goals	**9 %**	**Line 1**

**Note: For this procurement, individual ethnicity and gender goals are not specified. The Total Participation Goal for construction contracts may be met by using either Black-American, Hispanic-American, Asian American, or Women certified firms or any combination of such firms.*

ATTACH TO CONTRACT DOCUMENTS
THE CITY OF NEW YORK
DEPARTMENT OF DESIGN AND CONSTRUCTION
INFRASTRUCTURE DIVISION
BUREAU OF DESIGN
PROJECT ID: SEQ200531

STORM SEWER EXTENSIONS
IN 239TH STREET BETWEEN 87TH AVENUE AND 88TH AVENUE
IN 87TH AVENUE BETWEEN CROSS ISLAND PARKWAY AND 239TH STREET
IN CROSS ISLAND PARKWAY WEST SERVICE ROAD BETWEEN 90TH AVENUE AND 87TH AVENUE
INCLUDING WATER MAIN WORK

Together With All Work Incidental Thereto
BOROUGH OF QUEENS
CITY OF NEW YORK
ADDENDUM NO. 3

DATED: FEBRUARY 9, 2018

THIS ADDENDUM IS HEREBY MADE A PART OF THE CONTRACT DOCUMENTS

(1) **Refer** to the Bid and Contract Documents, VOLUME 1 OF 3, Page A-1, Attachment 1 - Bid Information;
Change the dates shown for Submission of Bids To: and for Bid Opening: from "February 15, 2018" to read "February 21, 2018."

(2) **Refer** to the Bid and Contract Documents, VOLUME 1 OF 3, Page 13, Schedule B - MWBE;
Change the dates shown for Bid/Proposal Response Date: from February 15, 2018" to read "February 21, 2018."

END OF ADDENDUM NO. 3

By signing in the space provided below, the bidder acknowledges receipt of One (1) page of this Addendum.

THIS ADDENDUM MUST BE SIGNED BY ALL BIDDERS AND ATTACHED TO THEIR BID

G. Saini

GURDIP SAINI, P.E.
Associate Commissioner/Design I

Inter LaPenta JV
Name of Bidder

By:

ATTACH TO CONTRACT DOCUMENTS
THE CITY OF NEW YORK
DEPARTMENT OF DESIGN AND CONSTRUCTION
INFRASTRUCTURE DIVISION
BUREAU OF DESIGN
PROJECT ID: SEQ200531

STORM SEWER EXTENSIONS
IN 239TH STREET BETWEEN 87TH AVENUE AND 88TH AVENUE
IN 87TH AVENUE BETWEEN CROSS ISLAND PARKWAY AND 239TH STREET
IN CROSS ISLAND PARKWAY WEST SERVICE ROAD BETWEEN 90TH AVENUE AND 87TH AVENUE
INCLUDING WATER MAIN WORK

Together With All Work Incidental Thereto
BOROUGH OF QUEENS
CITY OF NEW YORK

ADDENDUM NO. 4

DATED: FEBRUARY 14, 2018

THIS ADDENDUM IS HEREBY MADE A PART OF THE CONTRACT DOCUMENTS

1) **Refer** to the Bid and Contract Documents, VOLUME 1 OF 3, Page A-1, Attachment 1 – Bid Information;
Change the dates shown for Submission of Bids To: and for Bid Opening: from "February 21, 2018" to read "March 6, 2018."

2) **Refer** to the Bid and Contract Documents, VOLUME 1 OF 3, Page 13, Schedule B - MWBE;
Change the dates shown for Bid/Proposal Response Date: from February 21, 2018" to read "March 6, 2018."

3) **Refer** to the Bid and Contract Documents, VOLUME 1 OF 3, BID SCHEDULE, pages B-3 to B-59
Delete all pages in their entirety;
Substitute with attached revised pages B-3 (REVISION #1) to B- 5 (REVISION #1).

4) **Refer** to the Bid and Contract Documents, VOLUME 3 OF 3, TABLE OF CONTENTS,
Delete page in its entirety;
Substitute with attached revised TABLE OF CONTENTS Page.

5) **Refer** to the Bid and Contract Documents, VOLUME 3 OF 3, JOINT BID PAGES,
Delete all pages in their entirety;
Substitute with attached revised JOINT BID pages.

6) **Refer** to the Bid and Contract Documents, VOLUME 3 OF 3,
Add attached I PAGES.

7) **Refer** to the Bid and Contract Documents, VOLUME 3 OF 3,

Add attached S PAGES.

8) **Refer** to the Bid and Contract Documents, CONTRACT DRAWINGS,
Delete Sheet No. 4 of 38 and Sheet No. 5 of 38 in their entirety;
Substitute with attached revised drawings, Sheet No. 4R of 38 and Sheet No. 5R of 38.

9) For additional information, see the attached ONE (1) page of "Questions Submitted by Bidders and DDC's Responses".

END OF ADDENDUM NO. 4

By signing in the space provided below, the bidder acknowledges receipt of this Addendum consisting of two (2) pages and attachments consisting of two hundreds eighty two(282) pages plus two (2) sheets of drawings.

THIS ADDENDUM MUST BE SIGNED BY ALL BIDDERS AND ATTACHED TO THEIR BID

G. Saini

GURDIP SAINI, P.E.
Associate Commissioner/Design I

Inter LaPeruca JV

Name of Bidder

By:

CL
2/16/18

Questions Submitted by Bidders and DDC's Responses

QUESTION #1:

Can the chambers, items 51.11C000, 51.11C001, 51.11C002, 51.11C003, 51.11C004, be precast or any portion of the chambers be pre-cast in lieu of cast in place.

DDC'S RESPONSE:

No, those chambers have to be cast in place; they cannot be substituted with precast.

QUESTION #2:

There is no item for the installation of fire hydrants.

DDC'S RESPONSE:

Please refer to Article No. 3 of this addendum.

QUESTION #3:

The pay items include item 7.01 MGF – Metal Grate and Frame, However, no specifications are found for this item, and no details or locations were shown in the plans. Please advise.

DDC'S RESPONSE:

Please refer to Article No. 6 of this addendum.

QUESTION #4:

There is no pay item for new Standard 8' Precast Manholes, despite several being found in the bid plans. Please advise.

DDC'S RESPONSE:

Please refer to Article No. 3 of this addendum.

QUESTION #5:

Please provide specifications for the PM items, as none were provided in the bid documents.

DDC'S RESPONSE:

Please refer to Article No. 6 of this addendum.

QUESTION #6:

On Sheet 5 of 38, the profile shows two manholes as Std. 5' Precast Manholes, but on Sheet 8 of 38, Profiles C and D show these same manholes as Std. Drop Pipe MHs (Type II). Please clarify which of these profiles are correct. If they are indeed Std. 5' Precast Manholes, please include this item in the bid item list.

DDC'S RESPONSE:

Please refer to Article No. 8 of this addendum.

QUESTION #7:

Please provide specifications and details for items GI-2.06- L-Shaped Edging and GI-2.10B- Steel Tree Pit Guards-Type B, as they are needed to obtain pricing.

DDC'S RESPONSE:

Please refer to Article No. 6 of this addendum.

QUESTION #8:

Are the JB utility items included as "Work" as defined in Article 1 of the N.Y.C. Standard Contract?

DDC'S RESPONSE:

Yes, the JB utility items included as "Work" as defined in Article 1 of the N.Y.C. Standard Contract

QUESTION #9:

Are the JB utility items subject to Methods of Payment for Overruns and Extra Work pursuant to Article 26 of the N.Y.C. Standard Contract?

DDC'S RESPONSE:

Yes, the JB utility items subject to Methods of Payment for Overruns and Extra Work pursuant to Article 26 of the N.Y.C. Standard Contract.

QUESTION #10:

Are the JB utility items subject to the N.Y.S.Labor Law Section 220?

DDC'S RESPONSE:

Yes, the JB utility items subject to the N.Y.S.Labor Law Section 220.

QUESTION #11:

On page JB-3 of the contract documents, the first paragraph states that "The City has combined its Public Work, Interference Work and Utility Work into one bid contract package." Please define Utility Work.

DDC'S RESPONSE:

Please refer to Article No. 5 of this Addendum.

QUESTION #12:

Are the JB utility items of work subject to the MWBE goals specified in the contract documents since said utility items of work are intertwined with self-performed City work and are not typically subcontracted for?

DDC'S RESPONSE:

Yes, M/WBE goals also apply to all work in the contract including JB items.

QUESTION #13:

How are JB Item nos. 450.1(CE), 450.2(CE) and 450.3(CE) included as Interference Work since said items are Construction Field Support for Con Edison's forces?

DDC'S RESPONSE:

The listed items are bid items.

QUESTION #14:

On page JB-3 of the contract documents, the first paragraph states that "The City has combined its Public Work, Interference Work and Utility Work into one bid contract package." The last paragraph states bidders shall be required to bid Specific Public Work items and Specific Utility Work items. Furthermore, the last paragraph finally states that for the purposes of identifying the lowest responsive and responsible bidder, a bidder's unit prices shall be calculated on the City's Specific Public Work Items and estimates and the Utilities' Specific Utility Work Items and estimates. Can any one of the listed utility companies opt out of the bid after the sealed bids have been opened?

DDC'S RESPONSE:

No, utility company cannot opt-out once Contract is awarded. However, the actual quantities of work may vary in the field, per the contract requirements.

QUESTION #15:

Why is item no. JB350 included as Interference Work since said item is an accommodation item?

DDC'S RESPONSE:

JB350 item is City bid items per this contract.

QUESTION #16:

We have been unable to locate details and/or specs for some of the Green Infrastructure items in the NYCDEP Standard Designs & Guidelines for Green Infrastructure Practices. Please provide any details and/or specs you have on these following items:

Item #GI-4.06 CO (144) – Concrete Walkway and Footer for Hydraulically Connected ROWBS
Item #GI-4.06 CO (145) – Concrete Strip
Item #GI-4.06 CU (146) – Reinforced Concrete Culvert
Item #GI-4.06 SP (147) – Concrete Sediment Pad

DDC'S RESPONSE:

Please refer to Article No. 6 of this addendum.

QUESTION #17:

The following items are shown on the drawings but are not listed as items in the contract bid sheets. Please clarify.

- *Standard 8' Precast MH*
- *Standard 5' Precast MH*

DDC'S RESPONSE:

Please refer to Article No. 3 of this Addendum.

QUESTION #18:

Sheet P1 calls out the chamber as item 51.11C000 in plan view, but then refers to it as 51.11C001 in profile view. Please clarify.

DDC'S RESPONSE:

Please refer to Article No. 8 of this Addendum.

QUESTION #19:

Please clarify that items covered by the Joint Bid Specification titled JB-402T do not include the cost of supporting facility operators during their operations and that the cost for said support work is covered under JB 450.

DDC'S RESPONSE:

The Joint Bid Specification is clearly to define the scope of work.

NEW YORK CITY DEPARTMENT OF DESIGN AND CONSTRUCTION
DIVISION OF INFRASTRUCTURE - BUREAU OF DESIGN

Contract PIN 8502018SE0015C
Project ID SEQ200531

BID SCHEDULE

NOTE: (1) The Agency may reject a bid if it contains unbalanced bid prices. An unbalanced bid is considered to be one containing lump sum or unit items which do not reflect reasonable actual costs plus a reasonable proportionate share of the Bidder's anticipated profit, overhead costs, and other indirect costs, anticipated for the performance of the items in question.

(2) The following bid prices on Unit Price Contracts are to be paid for the actual quantities of the several classes of work in the completed work or structure, and they cover the cost of all work, labor, material, tools, plant and appliances of every description necessary to complete the entire work, as specified, and the removal of all debris, temporary work and appliances.

(3) PLEASE BE SURE A LEGIBLE BID IS ENTERED, IN INK, FOR EACH ITEM. Alterations must be initialed in ink by the bidder.

(4) The Extended Amount entered in Column 5 shall be the product of the Estimated Quantity in Column 2 times the Unit Price Bid in Column 4.

(5) Prospective bidders must examine the Bid Schedule carefully and, before bidding, must advise the Commissioner, in writing, if any pages are missing, and must request that such missing pages be furnished them. The pages of this Bid Schedule are numbered consecutively, as follows: B - 3 through B - 59

NEW YORK CITY DEPARTMENT OF DESIGN AND CONSTRUCTION
DIVISION OF INFRASTRUCTURE - BUREAU OF DESIGN

Contract PIN 8502018SE0015C
Project ID SEQ200531

COL. 1 ITEM NUMBER (SEQUENCE NO.)	COL. 2 ENGINEER'S ESTIMATE OF QUANTITIES	COL. 3 CLASSIFICATIONS	COL. 4 UNIT PRICES (IN FIGURES) DOLLARS CTS	COL. 5 EXTENDED AMOUNTS (IN FIGURES) DOLLARS CTS
4.02 AB-R (001)	35.0 S.Y.	ASPHALTIC CONCRETE WEARING COURSE, 1-1/2" THICK	$.	$.
4.02 AF-R (002)	8,646.0 S.Y.	ASPHALTIC CONCRETE WEARING COURSE, 2" THICK	$.	$.
4.02 CA (003)	1,495.5 TONS	BINDER MIXTURE	$.	$.
4.04 H (004)	706.0 C.Y.	CONCRETE BASE FOR PAVEMENT, VARIABLE THICKNESS FOR TRENCH RESTORATION, (HIGH-EARLY STRENGTH)	$.	$.

NEW YORK CITY DEPARTMENT OF DESIGN AND CONSTRUCTION
DIVISION OF INFRASTRUCTURE - BUREAU OF DESIGN

Contract PIN 8502018SE0015C
Project ID SEQ200531

COL. 1 ITEM NUMBER (SEQUENCE NO.)	COL. 2 ENGINEER'S ESTIMATE OF QUANTITIES	COL. 3 CLASSIFICATIONS	COL. 4 UNIT PRICES (IN FIGURES) DOLLARS	CTS	COL. 5 EXTENDED AMOUNTS (IN FIGURES) DOLLARS	CTS
4.08 AA (005)	740.0 L.F.	CONCRETE CURB (18" DEEP)	$	.	$	.
4.08 BA (006)	80.0 L.F.	CONCRETE CURB (21" DEEP)	$	.	$	.
4.09 AD (007)	40.0 L.F.	STRAIGHT STEEL FACED CONCRETE CURB (18" DEEP)	$	.	$	.
4.09 AE (008)	630.0 L.F.	STRAIGHT STEEL FACED CONCRETE CURB (21" DEEP)	$	.	$	.

NEW YORK CITY DEPARTMENT OF DESIGN AND CONSTRUCTION
DIVISION OF INFRASTRUCTURE - BUREAU OF DESIGN

Contract PIN 8502018SE0015C
Project ID SEQ200531

COL. 1 ITEM NUMBER (SEQUENCE NO.)	COL. 2 ENGINEER'S ESTIMATE OF QUANTITIES	COL. 3 CLASSIFICATIONS	COL. 4 UNIT PRICES (IN FIGURES) DOLLARS	CTS	COL. 5 EXTENDED AMOUNTS (IN FIGURES) DOLLARS	CTS
4.09 BE (009)	20.0 L.F.	DEPRESSED STEEL FACED CONCRETE CURB (21" DEEP)	$	.	$	.
4.09 CE (010)	50.0 L.F.	CORNER STEEL FACED CONCRETE CURB (21" DEEP)	$	.	$	.
4.13 AAS (011)	1,450.0 S.F.	4" CONCRETE SIDEWALK (UNPIGMENTED)	$	.	$	.
4.13 BAS (012)	250.0 S.F.	7" CONCRETE SIDEWALK (UNPIGMENTED)	$	.	$	.

NEW YORK CITY DEPARTMENT OF DESIGN AND CONSTRUCTION
DIVISION OF INFRASTRUCTURE - BUREAU OF DESIGN

Contract PIN 8502018SE0015C
Project ID SEQ200531

COL. 1 ITEM NUMBER (SEQUENCE NO.)	COL. 2 ENGINEER'S ESTIMATE OF QUANTITIES	COL. 3 CLASSIFICATIONS	COL. 4 UNIT PRICES (IN FIGURES) DOLLARS	CTS	COL. 5 EXTENDED AMOUNTS (IN FIGURES) DOLLARS	CTS
4.13 DE (013)	20.0 S.F.	EMBEDDED PREFORMED DETECTABLE WARNING UNITS	$	.	$	.
4.13 GI-AA (014)	2,950.0 S.F.	4" CONCRETE SIDEWALK (UNPIGMENTED)	$	.	$	.
4.15 (015)	5.0 C.Y.	TOPSOIL	$	.	$	.
4.18 A (016)	24.0 EACH	MAINTENANCE TREE PRUNING (UNDER 12" CAL.)	$	.	$	.

NEW YORK CITY DEPARTMENT OF DESIGN AND CONSTRUCTION
DIVISION OF INFRASTRUCTURE - BUREAU OF DESIGN

Contract PIN 8502018SE0015C
Project ID SEQ200531

COL. 1 ITEM NUMBER (SEQUENCE NO.)	COL. 2 ENGINEER'S ESTIMATE OF QUANTITIES	COL. 3 CLASSIFICATIONS	COL. 4 UNIT PRICES (IN FIGURES) DOLLARS CTS	COL. 5 EXTENDED AMOUNTS (IN FIGURES) DOLLARS CTS
4.18 B (017)	17.0 EACH	MAINTENANCE TREE PRUNING (12" TO UNDER 18" CAL.)	$.	$.
4.18 C (018)	10.0 EACH	MAINTENANCE TREE PRUNING (18" TO UNDER 24" CAL.)	$.	$.
4.18 D (019)	14.0 EACH	MAINTENANCE TREE PRUNING (24" CAL. AND OVER)	$.	$.
4.20 (020)	5.0 S.Y.	SEEDING	$.	$.

NEW YORK CITY DEPARTMENT OF DESIGN AND CONSTRUCTION
DIVISION OF INFRASTRUCTURE - BUREAU OF DESIGN

Contract PIN B502018SE0015C
Project ID SEQ200531

COL. 1 ITEM NUMBER (SEQUENCE NO.)	COL. 2 ENGINEER'S ESTIMATE OF QUANTITIES	COL. 3 CLASSIFICATIONS	COL. 4 UNIT PRICES (IN FIGURES) DOLLARS	CTS	COL. 5 EXTENDED AMOUNTS (IN FIGURES) DOLLARS	CTS
4.21 (021)	220.0 P/HR	TREE CONSULTANT	$	.	$	.
50.11MS040020 (022)	50.0 L.F.	4'-0"W X 2'-0"H SINGLE BARREL FLAT TOP REINFORCED CONCRETE STORM SEWER	$	.	$	.
50.11MS050026 (023)	1,050.0 L.F.	5'-0"W X 2'-6"H SINGLE BARREL FLAT TOP REINFORCED CONCRETE STORM SEWER	$	.	$	.
50.21M3C024D (024)	50.0 L.F.	24" R.C.P. CLASS III STORM SEWER, ON CONCRETE CRADLE	$	.	$	.

NEW YORK CITY DEPARTMENT OF DESIGN AND CONSTRUCTION
DIVISION OF INFRASTRUCTURE - BUREAU OF DESIGN

Contract PIN 8502018SE0015C
Project ID SEQ200531

COL. 1 ITEM NUMBER (SEQUENCE NO.)	COL. 2 ENGINEER'S ESTIMATE OF QUANTITIES	COL. 3 CLASSIFICATIONS	COL. 4 UNIT PRICES (IN FIGURES) DOLLARS CTS	COL. 5 EXTENDED AMOUNTS (IN FIGURES) DOLLARS CTS
50.21M3C048D (025)	500.0 L.F.	48" R.C.P. CLASS III STORM SEWER, ON CONCRETE CRADLE	$.	$.
50.21M3C054D (026)	600.0 L.F.	54" R.C.P. CLASS III STORM SEWER, ON CONCRETE CRADLE	$.	$.
50.21M3E030D (027)	45.0 L.F.	30" R.C.P. CLASS III STORM SEWER, ENCASED IN CONCRETE	$.	$.
50.31MC18 (028)	300.0 L.F.	18" E.S.V.P. STORM SEWER, ON CONCRETE CRADLE	$.	$.

NEW YORK CITY DEPARTMENT OF DESIGN AND CONSTRUCTION
DIVISION OF INFRASTRUCTURE - BUREAU OF DESIGN

Contract PIN 8502018SE0015C
Project ID SEQ200531

COL. 1 ITEM NUMBER (SEQUENCE NO.)	COL. 2 ENGINEER'S ESTIMATE OF QUANTITIES	COL. 3 CLASSIFICATIONS	COL. 4 UNIT PRICES (IN FIGURES) DOLLARS	CTS	COL. 5 EXTENDED AMOUNTS (IN FIGURES) DOLLARS	CTS
50.41S6E10 (029)	50.0 L.F.	10" D.I.P. CLASS 56 SANITARY SEWER, ENCASED IN CONCRETE	$	.	$	.
51.11C000 (030)	1.0 EACH	CHAMBER	$	.	$	.
51.11C001 (031)	1.0 EACH	CHAMBER NO. 1	$	.	$	.
51.11C002 (032)	1.0 EACH	CHAMBER NO. 2	$	.	$	.

NEW YORK CITY DEPARTMENT OF DESIGN AND CONSTRUCTION
DIVISION OF INFRASTRUCTURE - BUREAU OF DESIGN

Contract PIN 8502018SE0015C
Project ID SEQ200531

COL. 1 ITEM NUMBER (SEQUENCE NO.)	COL. 2 ENGINEER'S ESTIMATE OF QUANTITIES	COL. 3 CLASSIFICATIONS	COL. 4 UNIT PRICES (IN FIGURES) DOLLARS CTS	COL. 5 EXTENDED AMOUNTS (IN FIGURES) DOLLARS CTS
51.11C003 (033)	1.0 EACH	CHAMBER NO. 3	$.	$.
51.11C004 (034)	1.0 EACH	CHAMBER NO. 4	$.	$.
51.11P008 (035)	4.0 EACH	STANDARD 8'-0" DIAMETER PRECAST MANHOLE	$.	$.
51.21A000000C (036)	5.0 EACH	ACCESS MANHOLE	$.	$.

NEW YORK CITY DEPARTMENT OF DESIGN AND CONSTRUCTION
DIVISION OF INFRASTRUCTURE - BUREAU OF DESIGN

Contract PIN 8502018SE0015C
Project ID SEQ200531

COL. 1 ITEM NUMBER (SEQUENCE NO.)	COL. 2 ENGINEER'S ESTIMATE OF QUANTITIES	COL. 3 CLASSIFICATIONS	COL. 4 UNIT PRICES (IN FIGURES) DOLLARS CTS	COL. 5 EXTENDED AMOUNTS (IN FIGURES) DOLLARS CTS
51.21S0A1000V (037)	9.0 EACH	STANDARD MANHOLE TYPE A-1	$.	$.
51.21S0C1048R (038)	2.0 EACH	STANDARD MANHOLE TYPE C-1 ON 48" R.C.P. SEWER	$.	$.
51.21S0C1054R (039)	2.0 EACH	STANDARD MANHOLE TYPE C-1 ON 54" R.C.P. SEWER	$.	$.
51.23RF (040)	2.0 EACH	REPLACEMENT OF EXISTING MANHOLE FRAME AND COVER	$.	$.

NEW YORK CITY DEPARTMENT OF DESIGN AND CONSTRUCTION
DIVISION OF INFRASTRUCTURE - BUREAU OF DESIGN

Contract PIN 8502018SE0015C
Project ID SEQ200531

COL. 1 ITEM NUMBER (SEQUENCE NO.)	COL. 2 ENGINEER'S ESTIMATE OF QUANTITIES	COL. 3 CLASSIFICATIONS	COL. 4 UNIT PRICES (IN FIGURES) DOLLARS CTS	COL. 5 EXTENDED AMOUNTS (IN FIGURES) DOLLARS CTS
51.31S00254R (041)	1.0 EACH	STANDARD DROP-PIPE MANHOLE TYPE II ON 54" R.C.P. SEWER	$.	$.
51.41S001 (042)	28.0 EACH	STANDARD CATCH BASIN, TYPE 1	$.	$.
51.42S1SO (043)	2.0 EACH	INCREMENTAL COST OF STANDARD CATCH BASIN TYPE 3 WITH CURB PIECE IN LIEU OF STANDARD CATCH BASIN TYPE 1	$.	$.
52.11D12 (044)	425.0 L.F.	12" DUCTILE IRON PIPE BASIN CONNECTION	$.	$.

NEW YORK CITY DEPARTMENT OF DESIGN AND CONSTRUCTION
DIVISION OF INFRASTRUCTURE - BUREAU OF DESIGN

Contract PIN 8502018SE0015C
Project ID SEQ200531

COL. 1 ITEM NUMBER (SEQUENCE NO.)	COL. 2 ENGINEER'S ESTIMATE OF QUANTITIES	COL. 3 CLASSIFICATIONS	COL. 4 UNIT PRICES (IN FIGURES) DOLLARS CTS	COL. 5 EXTENDED AMOUNTS (IN FIGURES) DOLLARS CTS
53.11DR (045)	1,500.0 L.F.	TELEVISION INSPECTION AND DIGITAL AUDIO-VISUAL RECORDING OF SEWERS	$.	$.
6.02 AAN (046)	1,040.0 C.Y.	UNCLASSIFIED EXCAVATION	$.	$.
6.03 AA (047)	7.0 S.Y.	STRIPPING PAVEMENT SURFACE (ASPHALTIC CONCRETE)	$.	$.
6.09 GI-T1 (048)	320.0 L.F.	CONCRETE HEADER, TRAPEZOID-SHAPE (6" WIDE AT TOP X 15" DEEP X 9" WIDE AT BASE)	$.	$.

NEW YORK CITY DEPARTMENT OF DESIGN AND CONSTRUCTION
DIVISION OF INFRASTRUCTURE - BUREAU OF DESIGN

Contract PIN 8502018SE0015C
Project ID SEQ200531

COL. 1 ITEM NUMBER (SEQUENCE NO.)	COL. 2 ENGINEER'S ESTIMATE OF QUANTITIES	COL. 3 CLASSIFICATIONS	COL. 4 UNIT PRICES (IN FIGURES) DOLLARS CTS	COL. 5 EXTENDED AMOUNTS (IN FIGURES) DOLLARS CTS
6.25 RS (049)	822.0 S.F.	TEMPORARY SIGNS	$.	$.
6.26 (050)	280.0 L.F.	TIMBER CURB	$.	$.
6.28 AA (051)	104.0 L.F.	LIGHTED TIMBER BARRICADES	$.	$.
6.29 TTM (052)	10.0 EACH	TEMPORARY TUBULAR MARKERS	$.	$.

NEW YORK CITY DEPARTMENT OF DESIGN AND CONSTRUCTION
DIVISION OF INFRASTRUCTURE - BUREAU OF DESIGN

Contract PIN 8502018SE0015C
Project ID SEQ200531

COL. 1 ITEM NUMBER (SEQUENCE NO.)	COL. 2 ENGINEER'S ESTIMATE OF QUANTITIES	COL. 3 CLASSIFICATIONS	COL. 4 UNIT PRICES (IN FIGURES) DOLLARS	CTS	COL. 5 EXTENDED AMOUNTS (IN FIGURES) DOLLARS	CTS
6.34 RXS (053)	25.0 L.F.	REMOVE, STORE, AND REINSTALL EXISTING CHAIN LINK FENCE	$	.	$	.
6.40 CU (054)	27.0 MONTH	ENGINEER'S FIELD OFFICE (JOINT USE) (TYPE CU)	$	.	$	.
6.44 (055)	7,022.4 L.F.	THERMOPLASTIC REFLECTORIZED PAVEMENT MARKINGS (4" WIDE)	$	.	$	.
6.49 (056)	1,150.0 L.F.	TEMPORARY PAVEMENT MARKINGS (4" WIDE)	$	.	$	.

NEW YORK CITY DEPARTMENT OF DESIGN AND CONSTRUCTION
DIVISION OF INFRASTRUCTURE - BUREAU OF DESIGN

Contract PIN 8502018SE0015C
Project ID SEQ200531

COL. 1 ITEM NUMBER (SEQUENCE NO.)	COL. 2 ENGINEER'S ESTIMATE OF QUANTITIES	COL. 3 CLASSIFICATIONS	COL. 4 UNIT PRICES (IN FIGURES) DOLLARS	CTS	COL. 5 EXTENDED AMOUNTS (IN FIGURES) DOLLARS	CTS
6.50 (057)	2.0 EACH	CLEANING OF DRAINAGE STRUCTURES	$	.	$	.
6.51 GI-BD (058)	3.0 C.Y.	PAVEMENT KEY ALONG CURB LINE (3' TO 6' WIDE)	$	.	$	.
6.52 CG (059)	520.0 P/HR	CROSSING GUARD	$	.	$	.
6.53 (060)	945.0 L.F.	REMOVE EXISTING LANE MARKINGS (4" WIDE)	$	.	$	.

NEW YORK CITY DEPARTMENT OF DESIGN AND CONSTRUCTION
DIVISION OF INFRASTRUCTURE - BUREAU OF DESIGN

Contract PIN 8502018SE0015C
Project ID SEQ200531

COL. 1 ITEM NUMBER (SEQUENCE NO.)	COL. 2 ENGINEER'S ESTIMATE OF QUANTITIES	COL. 3 CLASSIFICATIONS	COL. 4 UNIT PRICES (IN FIGURES) DOLLARS	CTS	COL. 5 EXTENDED AMOUNTS (IN FIGURES) DOLLARS	CTS
6.73 A (061)	4.0 EACH	REMOVING EXISTING PARKING METER POSTS	$	.	$	.
6.73 B (062)	4.0 EACH	FURNISHING AND INSTALLING PARKING METER POSTS	$	.	$	.
6.82 A (063)	4.0 S.F.	REMOVING EXISTING TRAFFIC AND STREET NAME SIGNS	$	.	$	.
6.82 B (064)	12.0 L.F.	REMOVING EXISTING TRAFFIC AND STREET NAME SIGN POSTS	$	.	$	.

NEW YORK CITY DEPARTMENT OF DESIGN AND CONSTRUCTION
DIVISION OF INFRASTRUCTURE - BUREAU OF DESIGN

Contract PIN 8502018SE0015C
Project ID SEQ200531

COL. 1 ITEM NUMBER (SEQUENCE NO.)	COL. 2 ENGINEER'S ESTIMATE OF QUANTITIES	COL. 3 CLASSIFICATIONS	COL. 4 UNIT PRICES (IN FIGURES) DOLLARS CTS	COL. 5 EXTENDED AMOUNTS (IN FIGURES) DOLLARS CTS
6.83 AA (065)	4.0 S.F.	FURNISHING NEW NON-REFLECTORIZED TRAFFIC SIGNS	$.	$.
6.83 AB (066)	12.0 L.F.	FURNISHING NEW TRAFFIC SIGN POSTS	$.	$.
6.83 AR (067)	4.0 S.F.	FURNISHING NEW REFLECTORIZED TRAFFIC SIGNS	$.	$.
6.87 (068)	534.0 EACH	PLASTIC BARRELS	$.	$.

NEW YORK CITY DEPARTMENT OF DESIGN AND CONSTRUCTION
DIVISION OF INFRASTRUCTURE - BUREAU OF DESIGN

Contract PIN 8502018SE0015C
Project ID SEQ200531

COL. 1 ITEM NUMBER (SEQUENCE NO.)	COL. 2 ENGINEER'S ESTIMATE OF QUANTITIES	COL. 3 CLASSIFICATIONS	COL. 4 UNIT PRICES (IN FIGURES) DOLLARS CTS	COL. 5 EXTENDED AMOUNTS (IN FIGURES) DOLLARS CTS
6.91 (069)	9,170.0 L.F.	REFLECTIVE CRACKING MEMBRANE (18" WIDE)	$.	$.
60.11R606 (070)	75.0 L.F.	FURNISHING AND DELIVERING 6-INCH DUCTILE IRON RESTRAINED JOINT PIPE (CLASS 56)	$.	$.
60.11R608 (071)	725.0 L.F.	FURNISHING AND DELIVERING 8-INCH DUCTILE IRON RESTRAINED JOINT PIPE (CLASS 56)	$.	$.
60.11R612 (072)	1,230.0 L.F.	FURNISHING AND DELIVERING 12-INCH DUCTILE IRON RESTRAINED JOINT PIPE (CLASS 56)	$.	$.

NEW YORK CITY DEPARTMENT OF DESIGN AND CONSTRUCTION
DIVISION OF INFRASTRUCTURE - BUREAU OF DESIGN

Contract PIN 8502018SE0015C
Project ID SEQ200531

COL. 1 ITEM NUMBER (SEQUENCE NO.)	COL. 2 ENGINEER'S ESTIMATE OF QUANTITIES	COL. 3 CLASSIFICATIONS	COL. 4 UNIT PRICES (IN FIGURES) DOLLARS	CTS	COL. 5 EXTENDED AMOUNTS (IN FIGURES) DOLLARS	CTS
60.12D06 (073)	85.0 L.F.	LAYING 6-INCH DUCTILE IRON PIPE AND FITTINGS	$	.	$	.
60.12D08 (074)	775.0 L.F.	LAYING 8-INCH DUCTILE IRON PIPE AND FITTINGS	$	.	$	.
60.12D12 (075)	1,307.0 L.F.	LAYING 12-INCH DUCTILE IRON PIPE AND FITTINGS	$	.	$	.
60.13M0A24 (076)	10.5 TONS	FURNISHING AND DELIVERING DUCTILE IRON MECHANICAL JOINT 24-INCH DIAMETER AND SMALLER FITTINGS, INCLUDING WEDGE TYPE RETAINER GLANDS	$	.	$	.

NEW YORK CITY DEPARTMENT OF DESIGN AND CONSTRUCTION
DIVISION OF INFRASTRUCTURE - BUREAU OF DESIGN

Contract PIN 8502018SE0015C
Project ID SEQ200531

COL. 1 ITEM NUMBER (SEQUENCE NO.)	COL. 2 ENGINEER'S ESTIMATE OF QUANTITIES	COL. 3 CLASSIFICATIONS	COL. 4 UNIT PRICES (IN FIGURES) DOLLARS CTS	COL. 5 EXTENDED AMOUNTS (IN FIGURES) DOLLARS CTS
60.18BJC20EL (077)	3.0 EACH	FURNISHING, DELIVERING AND INSTALLING BELL JOINT CLAMPS, COMPLETE FOR 20-INCH PIPE AND LESS	$.	$.
61.11DMM06 (078)	7.0 EACH	FURNISHING AND DELIVERING 6-INCH MECHANICAL JOINT DUCTILE IRON GATE VALVE COMPLETE WITH WEDGE TYPE RETAINER GLANDS	$.	$.
61.11DMM08 (079)	2.0 EACH	FURNISHING AND DELIVERING 8-INCH MECHANICAL JOINT DUCTILE IRON GATE VALVE COMPLETE WITH WEDGE TYPE RETAINER GLANDS	$.	$.
61.11DMM12 (080)	7.0 EACH	FURNISHING AND DELIVERING 12-INCH MECHANICAL JOINT DUCTILE IRON GATE VALVE COMPLETE WITH WEDGE TYPE RETAINER GLANDS	$.	$.

NEW YORK CITY DEPARTMENT OF DESIGN AND CONSTRUCTION
DIVISION OF INFRASTRUCTURE - BUREAU OF DESIGN

Contract PIN 8502018SE0015C
Project ID SEQ200531

COL. 1 ITEM NUMBER (SEQUENCE NO.)	COL. 2 ENGINEER'S ESTIMATE OF QUANTITIES	COL. 3 CLASSIFICATIONS	COL. 4 UNIT PRICES (IN FIGURES) DOLLARS CTS	COL. 5 EXTENDED AMOUNTS (IN FIGURES) DOLLARS CTS
61.11TWC03 (081)	1.0 EACH	FURNISHING AND DELIVERING 3-INCH WET CONNECTION TAPPING VALVE COMPLETE WITH WEDGE TYPE RETAINER GLANDS	$.	$.
61.12DMM06 (082)	7.0 EACH	SETTING 6-INCH MECHANICAL JOINT DUCTILE IRON GATE VALVE COMPLETE WITH WEDGE TYPE RETAINER GLANDS	$.	$.
61.12DMM08 (083)	2.0 EACH	SETTING 8-INCH MECHANICAL JOINT DUCTILE IRON GATE VALVE COMPLETE WITH WEDGE TYPE RETAINER GLANDS	$.	$.
61.12DMM12 (084)	7.0 EACH	SETTING 12-INCH MECHANICAL JOINT DUCTILE IRON GATE VALVE COMPLETE WITH WEDGE TYPE RETAINER GLANDS	$.	$.

NEW YORK CITY DEPARTMENT OF DESIGN AND CONSTRUCTION
DIVISION OF INFRASTRUCTURE - BUREAU OF DESIGN

Contract PIN 8502018SE0015C
Project ID SEQ200531

COL. 1 ITEM NUMBER (SEQUENCE NO.)	COL. 2 ENGINEER'S ESTIMATE OF QUANTITIES	COL. 3 CLASSIFICATIONS	COL. 4 UNIT PRICES (IN FIGURES) DOLLARS	CTS	COL. 5 EXTENDED AMOUNTS (IN FIGURES) DOLLARS	CTS
61.12TWC03 (085)	1.0 EACH	SETTING 3-INCH WET CONNECTION TAPPING VALVE COMPLETE WITH WEDGE TYPE RETAINER GLANDS	$	.	$	.
62.11SD (086)	7.0 EACH	FURNISHING AND DELIVERING HYDRANTS	$	.	$	.
62.12SG (087)	7.0 EACH	SETTING HYDRANTS COMPLETE WITH WEDGE TYPE RETAINER GLANDS	$	.	$	.
62.13RH (088)	5.0 EACH	REMOVING HYDRANTS	$	.	$	.

NEW YORK CITY DEPARTMENT OF DESIGN AND CONSTRUCTION
DIVISION OF INFRASTRUCTURE - BUREAU OF DESIGN

Contract PIN 8502018SE0015C
Project ID SEQ200531

COL. 1 ITEM NUMBER (SEQUENCE NO.)	COL. 2 ENGINEER'S ESTIMATE OF QUANTITIES	COL. 3 CLASSIFICATIONS	COL. 4 UNIT PRICES (IN FIGURES) DOLLARS	CTS	COL. 5 EXTENDED AMOUNTS (IN FIGURES) DOLLARS	CTS
62.14FS (089)	14.0 EACH	FURNISHING, DELIVERING AND INSTALLING HYDRANT FENDERS	$	.	$	.
63.11VC (090)	10.0 TONS	FURNISHING AND DELIVERING VARIOUS CASTINGS	$	.	$	.
64.11EL (091)	1.0 EACH	WITHDRAWING AND REPLACING HOUSE SERVICES USING 1-1/2-INCH OR LARGER SCREW TAPS	$	.	$	.
64.11ST (092)	25.0 EACH	WITHDRAWING AND REPLACING HOUSE SERVICES USING SMALLER THAN 1-1/2-INCH SCREW TAPS	$	.	$	.

NEW YORK CITY DEPARTMENT OF DESIGN AND CONSTRUCTION
DIVISION OF INFRASTRUCTURE - BUREAU OF DESIGN

Contract PIN 8502018SE0015C
Project ID SEQ200531

COL. 1 ITEM NUMBER (SEQUENCE NO.)	COL. 2 ENGINEER'S ESTIMATE OF QUANTITIES	COL. 3 CLASSIFICATIONS	COL. 4 UNIT PRICES (IN FIGURES) DOLLARS CTS	COL. 5 EXTENDED AMOUNTS (IN FIGURES) DOLLARS CTS
64.12COLT (093)	10.0 L.F.	CUTTING AND OFFSETTING HOUSE SERVICE WATER CONNECTIONS (LESS THAN 3-INCH DIAMETER)	$.	$.
64.12ESLT (094)	50.0 L.F.	EXTENDING HOUSE SERVICE WATER CONNECTIONS (LESS THAN 3-INCH DIAMETER)	$.	$.
64.13WC12 (095)	1.0 EACH	FURNISHING, DELIVERING AND INSTALLING WET CONNECTION SLEEVE ON 12-INCH WATER MAIN PIPE WITH VARIOUS OUTLETS	$.	$.
65.11BR (096)	100.0 LBS.	FURNISHING, DELIVERING AND INSTALLING BANDS, RODS, WASHERS, ETC., COMPLETE, FOR RESTRAINING JOINTS	$.	$.

NEW YORK CITY DEPARTMENT OF DESIGN AND CONSTRUCTION
DIVISION OF INFRASTRUCTURE - BUREAU OF DESIGN

Contract PIN 8502018SE0015C
Project ID SEQ200531

COL. 1 ITEM NUMBER (SEQUENCE NO.)	COL. 2 ENGINEER'S ESTIMATE OF QUANTITIES	COL. 3 CLASSIFICATIONS	COL. 4 UNIT PRICES (IN FIGURES) DOLLARS CTS	COL. 5 EXTENDED AMOUNTS (IN FIGURES) DOLLARS CTS
65.21PS (097)	980.0 L.F.	FURNISHING AND PLACING POLYETHYLENE SLEEVE **Unit price bid shall not be less than: $ 2.00**	$.	$.
65.31FF (098)	14,850.0 S.F.	FURNISHING, DELIVERING AND PLACING FILTER FABRIC **Unit price bid shall not be less than: $ 0.10**	$.	$.
65.71SG (099)	130.0 C.Y.	FURNISHING, DELIVERING AND PLACING SCREENED GRAVEL OR SCREENED BROKEN STONE BEDDING	$.	$.
7.01 MGF (100)	23.0 S.F.	METAL GRATE AND FRAME	$.	$.

NEW YORK CITY DEPARTMENT OF DESIGN AND CONSTRUCTION
DIVISION OF INFRASTRUCTURE - BUREAU OF DESIGN

Contract PIN 8502018SE0015C
Project ID SEQ200531

COL. 1 ITEM NUMBER (SEQUENCE NO.)	COL. 2 ENGINEER'S ESTIMATE OF QUANTITIES	COL. 3 CLASSIFICATIONS	COL. 4 UNIT PRICES (IN FIGURES) DOLLARS	CTS	COL. 5 EXTENDED AMOUNTS (IN FIGURES) DOLLARS	CTS
7.13 B (101)	21.0 MONTH	MAINTENANCE OF SITE **Unit price bid shall not be less than: $ 8,000.00**	$	.	$	.
7.36 (102)	2,899.0 L.F.	PEDESTRIAN STEEL BARRICADES	$	.	$	.
7.88 AA (103)	1.0 L.S.	RODENT INFESTATION SURVEY AND MONITORING **Unit price bid shall not be less than: $ 2,800.00**	$	.	$	.
7.88 AB (104)	83.0 EACH	RODENT BAIT STATIONS **Unit price bid shall not be less than: $ 60.00**	$	.	$	.

NEW YORK CITY DEPARTMENT OF DESIGN AND CONSTRUCTION
DIVISION OF INFRASTRUCTURE - BUREAU OF DESIGN

Contract PIN 8502018SE0015C
Project ID SEQ200531

COL. 1 ITEM NUMBER (SEQUENCE NO.)	COL. 2 ENGINEER'S ESTIMATE OF QUANTITIES	COL. 3 CLASSIFICATIONS	COL. 4 UNIT PRICES (IN FIGURES) DOLLARS CTS	COL. 5 EXTENDED AMOUNTS (IN FIGURES) DOLLARS CTS
7.88 AC (105)	83.0 EACH	BAITING OF RODENT BAIT STATIONS **Unit price bid shall not be less than: $ 9.50**	$.	$.
7.88 AD (106)	8.0 BLOCK	WATERBUG BAIT APPLICATIONS **Unit price bid shall not be less than: $ 65.00**	$.	$.
70.21DK (107)	100.0 S.Y.	DECKING	$.	$.
70.31FN (108)	9,350.0 L.F.	FENCING **Unit price bid shall not be less than: $ 1.00**	$.	$.

NEW YORK CITY DEPARTMENT OF DESIGN AND CONSTRUCTION
DIVISION OF INFRASTRUCTURE - BUREAU OF DESIGN

Contract PIN 8502018SE0015C
Project ID SEQ200531

COL. 1 ITEM NUMBER (SEQUENCE NO.)	COL. 2 ENGINEER'S ESTIMATE OF QUANTITIES	COL. 3 CLASSIFICATIONS	COL. 4 UNIT PRICES (IN FIGURES) DOLLARS CTS	COL. 5 EXTENDED AMOUNTS (IN FIGURES) DOLLARS CTS
70.51EO (109)	30.0 C.Y.	EXCAVATION OF BOULDERS IN OPEN CUT **Unit price bid shall not be less than: $ 75.00**	$.	$.
70.61RE (110)	25.0 C.Y.	ROCK EXCAVATION	$.	$.
70.71SB (111)	5.0 C.Y.	STONE BALLAST **Unit price bid shall not be less than: $ 15.00**	$.	$.
70.81CB (112)	1,792.0 C.Y.	CLEAN BACKFILL **Unit price bid shall not be less than: $ 15.00**	$.	$.

NEW YORK CITY DEPARTMENT OF DESIGN AND CONSTRUCTION
DIVISION OF INFRASTRUCTURE - BUREAU OF DESIGN

Contract PIN 8502018SE0015C
Project ID SEQ200531

COL. 1 ITEM NUMBER (SEQUENCE NO.)	COL. 2 ENGINEER'S ESTIMATE OF QUANTITIES	COL. 3 CLASSIFICATIONS	COL. 4 UNIT PRICES (IN FIGURES) DOLLARS CTS	COL. 5 EXTENDED AMOUNTS (IN FIGURES) DOLLARS CTS
70.91SW12 (113)	2,110.0 S.F.	FURNISHING AND PLACING SHEETING AND BRACING IN TRENCH FOR WATER MAIN PIPE 12-INCH IN DIAMETER AND LESS	$.	$.
73.11AB (114)	37.0 C.Y.	ADDITIONAL BRICK MASONRY **Unit price bid shall not be less than: $ 62.50**	$.	$.
73.21AC (115)	40.0 C.Y.	ADDITIONAL CONCRETE **Unit price bid shall not be less than: $ 62.50**	$.	$.
73.31AE0 (116)	200.0 C.Y.	ADDITIONAL EARTH EXCAVATION INCLUDING TEST PITS (ALL DEPTHS) **Unit price bid shall not be less than: $ 20.00**	$.	$.

NEW YORK CITY DEPARTMENT OF DESIGN AND CONSTRUCTION
DIVISION OF INFRASTRUCTURE - BUREAU OF DESIGN

Contract PIN 8502018SE0015C
Project ID SEQ200531

COL. 1 ITEM NUMBER (SEQUENCE NO.)	COL. 2 ENGINEER'S ESTIMATE OF QUANTITIES	COL. 3 CLASSIFICATIONS	COL. 4 UNIT PRICES (IN FIGURES) DOLLARS	CTS	COL. 5 EXTENDED AMOUNTS (IN FIGURES) DOLLARS	CTS
73.41AG (117)	5,420.0 C.Y.	ADDITIONAL SELECT GRANULAR BACKFILL **Unit price bid shall not be less than: $ 15.00**	$	.	$	.
73.51AS (118)	1,100.0 LBS.	ADDITIONAL STEEL REINFORCING BARS **Unit price bid shall not be less than: $ 1.00**	$	.	$	.
8.01 C1 (119)	3,500.0 TONS	HANDLING, TRANSPORTING AND DISPOSAL OF NON-HAZARDOUS CONTAMINATED SOIL	$	.	$	.
8.01 C2 (120)	22.0 SETS	SAMPLING AND TESTING OF CONTAMINATED/POTENTIALLY HAZARDOUS SOIL FOR DISPOSAL PURPOSES	$	.	$	.

NEW YORK CITY DEPARTMENT OF DESIGN AND CONSTRUCTION
DIVISION OF INFRASTRUCTURE - BUREAU OF DESIGN

Contract PIN 8502018SE0015C
Project ID SEQ200531

COL. 1 ITEM NUMBER (SEQUENCE NO.)	COL. 2 ENGINEER'S ESTIMATE OF QUANTITIES	COL. 3 CLASSIFICATIONS	COL. 4 UNIT PRICES (IN FIGURES) DOLLARS	CTS	COL. 5 EXTENDED AMOUNTS (IN FIGURES) DOLLARS	CTS
8.01 H (121)	150.0 TONS	HANDLING, TRANSPORTING AND DISPOSAL OF HAZARDOUS SOIL	$	.	$	.
8.01 S (122)	1.0 L.S.	HEALTH AND SAFETY	$	.	$	.
8.01 W1 (123)	3.0 DAY	REMOVAL, TREATMENT, AND DISCHARGE/DISPOSAL OF CONTAMINATED WATER	$	.	$	.
8.01 W2 (124)	3.0 SETS	SAMPLING AND TESTING OF CONTAMINATED WATER	$	.	$	.

NEW YORK CITY DEPARTMENT OF DESIGN AND CONSTRUCTION
DIVISION OF INFRASTRUCTURE - BUREAU OF DESIGN

Contract PIN 8502018SE0015C
Project ID SEQ200531

COL. 1 ITEM NUMBER (SEQUENCE NO.)	COL. 2 ENGINEER'S ESTIMATE OF QUANTITIES	COL. 3 CLASSIFICATIONS	COL. 4 UNIT PRICES (IN FIGURES) DOLLARS	CTS	COL. 5 EXTENDED AMOUNTS (IN FIGURES) DOLLARS	CTS
8.02 A (125)	404.0 S.F.	SPECIAL CARE EXCAVATION AND RESTORATION FOR SIDEWALK WORK	$	.	$	.
8.02 B (126)	848.0 L.F.	SPECIAL CARE EXCAVATION AND RESTORATION FOR CURB WORK	$	.	$	.
8.20 (127)	93.7 S.Y.	JUTE MESH	$	.	$	.
9.30 (128)	1.0 L.S.	STORM WATER POLLUTION PREVENTION	$	.	$	.

NEW YORK CITY DEPARTMENT OF DESIGN AND CONSTRUCTION
DIVISION OF INFRASTRUCTURE - BUREAU OF DESIGN

Contract PIN 8502018SE0015C
Project ID SEQ200531

COL. 1 ITEM NUMBER (SEQUENCE NO.)	COL. 2 ENGINEER'S ESTIMATE OF QUANTITIES	COL. 3 CLASSIFICATIONS	COL. 4 UNIT PRICES (IN FIGURES) DOLLARS	CTS	COL. 5 EXTENDED AMOUNTS (IN FIGURES) DOLLARS	CTS
GI-2.06 (129)	153.0 L.F.	L-SHAPED EDGING	$	.	$	.
GI-2.07D (130)	90.8 C.Y.	3"-4" CLEAN OPEN GRADED STONE	$	.	$	.
GI-2.08 (131)	922.5 S.F.	HDPE BARRIER	$	.	$	.
GI-2.08 L (132)	81.3 S.F.	IMPERMEABLE LINER	$	.	$	.

NEW YORK CITY DEPARTMENT OF DESIGN AND CONSTRUCTION
DIVISION OF INFRASTRUCTURE - BUREAU OF DESIGN

Contract PIN 8502018SE0015C
Project ID SEQ200531

COL. 1 ITEM NUMBER (SEQUENCE NO.)	COL. 2 ENGINEER'S ESTIMATE OF QUANTITIES	COL. 3 CLASSIFICATIONS	COL. 4 UNIT PRICES (IN FIGURES) DOLLARS CTS	COL. 5 EXTENDED AMOUNTS (IN FIGURES) DOLLARS CTS
GI-2.09 DR (133)	4,742.0 S.Y.	GEOTEXTILE FABRIC FOR DRAINAGE	$.	$.
GI-2.10PC-B (134)	32.0 L.F.	STEEL TREE PIT GUARD - POWDER COATED TYPE B	$.	$.
GI-2.13A (135)	61.6 C.Y.	ENGINEERED SOIL AND SAND	$.	$.
GI-2.16 FPA (136)	20.0 L.F.	FULL PERFORATED HDPE PIPE (8" DIA.)	$.	$.

NEW YORK CITY DEPARTMENT OF DESIGN AND CONSTRUCTION
DIVISION OF INFRASTRUCTURE - BUREAU OF DESIGN

Contract PIN 8502018SE0015C
Project ID SEQ200531

COL. 1 ITEM NUMBER (SEQUENCE NO.)	COL. 2 ENGINEER'S ESTIMATE OF QUANTITIES	COL. 3 CLASSIFICATIONS	COL. 4 UNIT PRICES (IN FIGURES) DOLLARS	CTS	COL. 5 EXTENDED AMOUNTS (IN FIGURES) DOLLARS	CTS
GI-2.16 HPA (137)	20.0 L.F.	HALF PERFORATED HDPE PIPE (8" DIA.)	$	.	$	.
GI-2.16 SA (138)	3.0 L.F.	SOLID HDPE PIPE (8" DIA.)	$	.	$	.
GI-2.16P (139)	1.0 L.F.	PERFORATED HDPE PIPE (6" DIA.)	$	.	$	.
GI-2.16S (140)	1.0 L.F.	SOLID HDPE PIPE (6" DIA.)	$	.	$	.

NEW YORK CITY DEPARTMENT OF DESIGN AND CONSTRUCTION
DIVISION OF INFRASTRUCTURE - BUREAU OF DESIGN

Contract PIN 8502018SE0015C
Project ID SEQ200531

COL. 1 ITEM NUMBER (SEQUENCE NO.)	COL. 2 ENGINEER'S ESTIMATE OF QUANTITIES	COL. 3 CLASSIFICATIONS	COL. 4 UNIT PRICES (IN FIGURES) DOLLARS	CTS	COL. 5 EXTENDED AMOUNTS (IN FIGURES) DOLLARS	CTS
GI-2.17 A (141)	90.8 C.Y.	GABION (WITH CLEAN OPEN GRADED STONE)	$	.	$	.
GI-2.19 (142)	4.0 L.F.	HDPE STORM WATER CHAMBER	$	.	$	.
GI-4.02 (143)	843.0 C.Y.	EARTH EXCAVATION	$	.	$	.
GI-4.03 (144)	3.0 C.Y.	EXCAVATION OF BOULDERS IN OPEN CUT	$	.	$	.

NEW YORK CITY DEPARTMENT OF DESIGN AND CONSTRUCTION
DIVISION OF INFRASTRUCTURE - BUREAU OF DESIGN

Contract PIN 8502018SE0015C
Project ID SEQ200531

COL. 1 ITEM NUMBER (SEQUENCE NO.)	COL. 2 ENGINEER'S ESTIMATE OF QUANTITIES	COL. 3 CLASSIFICATIONS	COL. 4 UNIT PRICES (IN FIGURES) DOLLARS	CTS	COL. 5 EXTENDED AMOUNTS (IN FIGURES) DOLLARS	CTS
GI-4.06 A (145)	128.0 S.F.	REINFORCED CONCRETE APRON	$	.	$	.
GI-4.06 CG (146)	91.7 L.F.	REINFORCED CONCRETE GUTTER	$	.	$	.
GI-4.06 CO (147)	34.0 L.F.	CONCRETE WALKWAY AND FOOTER FOR HYDRAULICALLY CONNECTED GREEN INFRASTRUCTURE PRACTICES	$	.	$	.
GI-4.06 CS (148)	153.0 L.F.	CONCRETE STRIP	$	.	$	.

NEW YORK CITY DEPARTMENT OF DESIGN AND CONSTRUCTION
DIVISION OF INFRASTRUCTURE - BUREAU OF DESIGN

Contract PIN 8502018SE0015C
Project ID SEQ200531

COL. 1 ITEM NUMBER (SEQUENCE NO.)	COL. 2 ENGINEER'S ESTIMATE OF QUANTITIES	COL. 3 CLASSIFICATIONS	COL. 4 UNIT PRICES (IN FIGURES) DOLLARS	CTS	COL. 5 EXTENDED AMOUNTS (IN FIGURES) DOLLARS	CTS
GI-4.06 CU (149)	34.0 L.F.	REINFORCED CONCRETE CULVERT AND COVER	$	.	$	.
GI-4.06 SP (150)	27.3 L.F.	CONCRETE SEDIMENT PAD	$	.	$	.
GI-5.10 (151)	14.0 V.F.	STONE COLUMN	$	.	$	.
GI-5.21R (152)	289.0 L.F.	SAWCUTTING EXISTING ROADWAY PAVEMENT	$	.	$	.

NEW YORK CITY DEPARTMENT OF DESIGN AND CONSTRUCTION
DIVISION OF INFRASTRUCTURE - BUREAU OF DESIGN

Contract PIN 8502018SE0015C
Project ID SEQ200531

COL. 1 ITEM NUMBER (SEQUENCE NO.)	COL. 2 ENGINEER'S ESTIMATE OF QUANTITIES	COL. 3 CLASSIFICATIONS	COL. 4 UNIT PRICES (IN FIGURES) DOLLARS CTS	COL. 5 EXTENDED AMOUNTS (IN FIGURES) DOLLARS CTS
GI-5.21S (153)	352.0 L.F.	SAWCUTTING EXISTING SIDEWALK PAVEMENT	$.	$.
GI-5.35 (154)	15.0 L.F.	SLEEVE FOR UTILITY CROSSINGS	$.	$.
GM-11 (155)	3.0 C.Y.	HAND AND/OR PNEUMATIC EXCAVATION	$.	$.
JB 100.1(CE) (156)	7.0 EACH	UTILITIES CROSSING TRENCH FOR CATCH BASIN CHUTE CONNECTION AND/OR TEST PIT (TYPE .1) **Unit price bid shall not be less than: $ 361.00**	$.	$.

NEW YORK CITY DEPARTMENT OF DESIGN AND CONSTRUCTION
DIVISION OF INFRASTRUCTURE - BUREAU OF DESIGN

Contract PIN 8502018SE0015C
Project ID SEQ200531

COL. 1 ITEM NUMBER (SEQUENCE NO.)	COL. 2 ENGINEER'S ESTIMATE OF QUANTITIES	COL. 3 CLASSIFICATIONS	COL. 4 UNIT PRICES (IN FIGURES) DOLLARS CTS	COL. 5 EXTENDED AMOUNTS (IN FIGURES) DOLLARS CTS
JB 100.2(CE) (157)	3.0 EACH	UTILITIES CROSSING TRENCH FOR CATCH BASIN CHUTE CONNECTION AND/OR TEST PIT (TYPE .2) **Unit price bid shall not be less than: $ 676.00**	$.	$.
JB 101.1(CE) (158)	5.0 EACH	UTILITIES CROSSING TRENCH FOR SEWERS OVER 12" TO 24" DIAMETER (TYPE .1) **Unit price bid shall not be less than: $ 3,064.00**	$.	$.
JB 101.2(CE) (159)	5.0 EACH	UTILITIES CROSSING TRENCH FOR SEWERS OVER 12" TO 24" DIAMETER (TYPE .2) **Unit price bid shall not be less than: $ 3,832.00**	$.	$.
JB 104.1(CE) (160)	5.0 EACH	UTILITIES CROSSING TRANCH FOR SEWERS OVER 48" TO 54" DIAMETER (TYPE.1) **Unit price bid shall not be less than: $ 4,000.00**	$.	$.

NEW YORK CITY DEPARTMENT OF DESIGN AND CONSTRUCTION
DIVISION OF INFRASTRUCTURE - BUREAU OF DESIGN

Contract PIN 8502018SE0015C
Project ID SEQ200531

COL. 1 ITEM NUMBER (SEQUENCE NO.)	COL. 2 ENGINEER'S ESTIMATE OF QUANTITIES	COL. 3 CLASSIFICATIONS	COL. 4 UNIT PRICES (IN FIGURES) DOLLARS CTS	COL. 5 EXTENDED AMOUNTS (IN FIGURES) DOLLARS CTS
JB 104.2(CE) (161)	1.0 EACH	UTILITIES CROSSING TRENCH FOR SEWERS OVER 48" TO 54" DIAMETER (TYPE.2) **Unit price bid shall not be less than: $ 4,600.00**	$.	$.
JB 104.2(VERZ) (162)	1.0 EACH	UTILITIES CROSSING TRENCH FOR SEWERS OVER 48" TO 54" DIAMETER (TYPE .2) **Unit price bid shall not be less than: $ 4,037.00**	$.	$.
JB 105.1(CE) (163)	7.0 EACH	UTILITIES CROSSING TRENCH FOR SEWERS OVER 54" TO 60" DIAMETER (TYPE .1) **Unit price bid shall not be less than: $ 4,276.00**	$.	$.
JB 105.2(CE) (164)	1.0 EACH	UTILITIES CROSSING TRENCH FOR SEWERS OVER 54" TO 60" DIAMETER (TYPE .2) **Unit price bid shall not be less than: $ 5,058.00**	$.	$.

NEW YORK CITY DEPARTMENT OF DESIGN AND CONSTRUCTION
DIVISION OF INFRASTRUCTURE - BUREAU OF DESIGN

Contract PIN 8502018SE0015C
Project ID SEQ200531

COL. 1 ITEM NUMBER (SEQUENCE NO.)	COL. 2 ENGINEER'S ESTIMATE OF QUANTITIES	COL. 3 CLASSIFICATIONS	COL. 4 UNIT PRICES (IN FIGURES) DOLLARS	CTS	COL. 5 EXTENDED AMOUNTS (IN FIGURES) DOLLARS	CTS
JB 108.1(CE) (165)	19.0 EACH	UTILITIES CROSSING TRENCH FOR WATER MAIN UP TO AND INCLUDING 12" DIAMETER (TYPE .1) **Unit price bid shall not be less than: $ 497.00**	$	.	$	.
JB 108.2(CE) (166)	7.0 EACH	UTILITIES CROSSING TRENCH FOR WATER MAIN UP TO AND INCLUDING 12" DIAMETER (TYPE .2) **Unit price bid shall not be less than: $ 1,550.00**	$	.	$	.
JB 108.2(VERZ) (167)	1.0 EACH	UTILITIES CROSSING TRENCH FOR WATER MAIN UP TO AND INCLUDING 12" DIAMETER (TYPE .2) **Unit price bid shall not be less than: $ 1,345.00**	$	.	$	.
JB 200(CE) (168)	51.0 L.F.	EXTRA DEPTH EXCAVATION OF CATCH BASIN CHUTE CONNECTION PIPES **Unit price bid shall not be less than: $ 122.00**	$	.	$	.

NEW YORK CITY DEPARTMENT OF DESIGN AND CONSTRUCTION
DIVISION OF INFRASTRUCTURE - BUREAU OF DESIGN

Contract PIN 8502018SE0015C
Project ID SEQ200531

COL. 1 ITEM NUMBER (SEQUENCE NO.)	COL. 2 ENGINEER'S ESTIMATE OF QUANTITIES	COL. 3 CLASSIFICATIONS	COL. 4 UNIT PRICES (IN FIGURES) DOLLARS	CTS	COL. 5 EXTENDED AMOUNTS (IN FIGURES) DOLLARS	CTS
JB 225 (CE) (169)	8.0 EACH	INSTALLATION AND REMOVAL OF CATCH BASINS WITH UTILITY INTERFERENCES **Unit price bid shall not be less than: $ 5,176.00**	$	.	$	.
JB 225 (VERZ) (170)	2.0 EACH	INSTALLATION AND REMOVAL OF CATCH BASINS WITH UTILITY INTERFERENCES **Unit price bid shall not be less than: $ 2,925.00**	$	.	$	.
JB 227 (CE) (171)	1.0 EACH	REMOVAL OF CATCH BASINS WITH UTILITY INTERFERENCES **Unit price bid shall not be less than: $ 1,945.00**	$	.	$	.
JB 300 (CE) (172)	134.0 C.Y.	SPECIAL CARE EXCAVATION AND BACKFILLING **Unit price bid shall not be less than: $ 235.00**	$	.	$	.

NEW YORK CITY DEPARTMENT OF DESIGN AND CONSTRUCTION
DIVISION OF INFRASTRUCTURE - BUREAU OF DESIGN

Contract PIN 8502018SE0015C
Project ID SEQ200531

COL. 1 ITEM NUMBER (SEQUENCE NO.)	COL. 2 ENGINEER'S ESTIMATE OF QUANTITIES	COL. 3 CLASSIFICATIONS	COL. 4 UNIT PRICES (IN FIGURES) DOLLARS	CTS	COL. 5 EXTENDED AMOUNTS (IN FIGURES) DOLLARS	CTS
JB 300(VERZ) (173)	10.0 C.Y.	SPECIAL CARE EXCAVATION AND BACKFILLING	$	.	$	.
JB 303(CE) (174)	83.0 C.Y.	FURNISH, DELIVER AND INSTALL TYPE 3/8 CLEAN SAND BACKFILL **Unit price bid shall not be less than: $ 39.00**	$	.	$	.
JB 330E.2(CE) (175)	8.0 L.F.	SUPPORT AND PROTECTION OF ELECTRIC AND GAS FACILITIES DURING EXCAVATION OF CITY TRENCH WHEN FACILITIES LIE WITHIN TRENCH LIMITS (TYPE .2) **Unit price bid shall not be less than: $ 30.00**	$	.	$	.
JB 350 T/TW(VERZ) (176)	1.0 L.S.	OVERHEAD ACCOMMODATION, PROTECTION OF OVERHEAD FACILITIES, POLES AND APPURTENANCES.	$	.	$	.

NEW YORK CITY DEPARTMENT OF DESIGN AND CONSTRUCTION
DIVISION OF INFRASTRUCTURE - BUREAU OF DESIGN

Contract PIN 8502018SE0015C
Project ID SEQ200531

COL. 1 ITEM NUMBER (SEQUENCE NO.)	COL. 2 ENGINEER'S ESTIMATE OF QUANTITIES	COL. 3 CLASSIFICATIONS	COL. 4 UNIT PRICES (IN FIGURES) DOLLARS CTS	COL. 5 EXTENDED AMOUNTS (IN FIGURES) DOLLARS CTS
JB 350(CE) (177)	1.0 L.S.	OVERHEAD ACCOMMODATION, PROTECTION OF OH FACILITIES & APPURTENANCES **Unit price bid shall not be less than: $ 3,900.00**	$.	$.
JB 350TWC (178)	1.0 L.S.	OVERHEAD ACCOMMODATION, PROTECTION OF OVERHEAD FACILITIES, POLES & APPURTENANCES **Unit price bid shall not be less than: $ 9,308.00**	$.	$.
JB 351(CE) (179)	2.0 EACH	INSTALL AND REMOVE "A" FRAME ON UTILITY POLES **Unit price bid shall not be less than: $ 1,187.00**	$.	$.
JB 400 (180)	50.0 C.Y.	TEST PITS FOR UTILITY FACILITIES **Unit price bid shall not be less than: $ 200.00**	$.	$.

NEW YORK CITY DEPARTMENT OF DESIGN AND CONSTRUCTION
DIVISION OF INFRASTRUCTURE - BUREAU OF DESIGN

Contract PIN 8502018SE0015C
Project ID SEQ200531

COL. 1 ITEM NUMBER (SEQUENCE NO.)	COL. 2 ENGINEER'S ESTIMATE OF QUANTITIES	COL. 3 CLASSIFICATIONS	COL. 4 UNIT PRICES (IN FIGURES) DOLLARS	CTS	COL. 5 EXTENDED AMOUNTS (IN FIGURES) DOLLARS	CTS
JB 400 (VERZ) (181)	5.0 C.Y.	TEST PITS FOR UTILITY FACILITIES **Unit price bid shall not be less than: $ 218.00**	$	.	$	.
JB 401 (CE) (182)	22.0 C.Y.	TRENCH EXCAVATION FOR ADJUSTMENT OF UTILITY FACILITIES **Unit price bid shall not be less than: $ 242.00**	$	.	$	.
JB 401 (VERZ) (183)	22.0 C.Y.	TRENCH EXCAVATION FOR ADJUSTMENT OF UTILITY FACILITIES **Unit price bid shall not be less than: $ 228.00**	$	.	$	.
JB 402.2 (CE) (184)	40.0 L.F.	EXISTING NON-CONCRETE ENCASED CONDUITS PLACED IN FINAL POSITION WITHOUT CONCRETE ENCASEMENT **Unit price bid shall not be less than: $ 49.00**	$	.	$	.

NEW YORK CITY DEPARTMENT OF DESIGN AND CONSTRUCTION
DIVISION OF INFRASTRUCTURE - BUREAU OF DESIGN

Contract PIN 8502018SE0015C
Project ID SEQ200531

COL. 1 ITEM NUMBER (SEQUENCE NO.)	COL. 2 ENGINEER'S ESTIMATE OF QUANTITIES	COL. 3 CLASSIFICATIONS	COL. 4 UNIT PRICES (IN FIGURES) DOLLARS	CTS	COL. 5 EXTENDED AMOUNTS (IN FIGURES) DOLLARS	CTS
JB 402T.2A(VERZ) (185)	34.0 L.F.	EXISTING OCCUPIED NON-CONRETE ENCASED TELECOMMUNICATION CONDUITS PLACED IN FINAL POSITION WITH CONCRETE ENCASEMENT **Unit price bid shall not be less than: $ 44.00**	$	.	$	.
JB 402T.V2A(VERZ) (186)	170.0 L.F.	EXISTING VACANT NON-CONCRETE ENCASED TELECOMMUNICATION CONDUITS PLACED IN FINAL POSITION WITH CONCRETE ENCASEMENT **Unit price bid shall not be less than: $ 26.00**	$	.	$	.
JB 450.1(CE) (187)	1.0 CREW/HR	CONSTRUCTION FIELD SUPPORT - SURVEY CREW (TYPE .1) **Unit price bid shall not be less than: $ 325.00**	$	.	$	.
JB 450.2(CE) (188)	20.0 CREW/HR	CONSTRUCTION FIELD SUPPORT - SMALL SIZE CREW (TYPE .2) **Unit price bid shall not be less than: $ 350.00**	$	.	$	.

NEW YORK CITY DEPARTMENT OF DESIGN AND CONSTRUCTION
DIVISION OF INFRASTRUCTURE - BUREAU OF DESIGN

Contract PIN 8502018SE0015C
Project ID SEQ200531

COL. 1 ITEM NUMBER (SEQUENCE NO.)	COL. 2 ENGINEER'S ESTIMATE OF QUANTITIES	COL. 3 CLASSIFICATIONS	COL. 4 UNIT PRICES (IN FIGURES) DOLLARS	CTS	COL. 5 EXTENDED AMOUNTS (IN FIGURES) DOLLARS	CTS
JB 450.3(CE) (189)	28.0 CREW/HR	CONSTRUCTION FIELD SUPPORT - MEDIUM SIZE CREW (TYPE .3) **Unit price bid shall not be less than: $ 925.00**	$	.	$	.
JB 500(CE) (190)	2,564.0 L.F.	REMOVAL OF ABANDONED UTILITY CONDUITS (NON-CONCRETE ENCASED) **Unit price bid shall not be less than: $ 3.00**	$	.	$	.
JB 501(CE) (191)	12.0 C.Y.	REMOVAL OF ABANDONED MASONRY FOR UTILITY FACILITIES **Unit price bid shall not be less than: $ 304.00**	$	.	$	.
JB 636 EE(VERZ) (192)	1.0 EACH	ADJUSTMENT OF UTILITY HARDWARE (34" TO UNDER 41" WIDTH) **Unit price bid shall not be less than: $ 490.00**	$	.	$	.

NEW YORK CITY DEPARTMENT OF DESIGN AND CONSTRUCTION
DIVISION OF INFRASTRUCTURE - BUREAU OF DESIGN

Contract PIN 8502018SE0015C
Project ID SEQ200531

COL. 1 ITEM NUMBER (SEQUENCE NO.)	COL. 2 ENGINEER'S ESTIMATE OF QUANTITIES	COL. 3 CLASSIFICATIONS	COL. 4 UNIT PRICES (IN FIGURES) DOLLARS	CTS	COL. 5 EXTENDED AMOUNTS (IN FIGURES) DOLLARS	CTS
JB 636 MD(CE) (193)	6.0 EACH	MODIFICATION OF WORK METHODS TO ACCOMMODATE UTILITY HARDWARE (30" TO UNDER 34" WIDTH) **Unit price bid shall not be less than: $ 75.00**	$	.	$	.
JB 636ED(CE) (194)	3.0 EACH	PRIVATELY OWNED UTILITY STRUCTURE HARDWARE ADJUSTED (30" TO UNDER 34" WIDTH) **Unit price bid shall not be less than: $ 796.00**	$	.	$	.
JB 700(CE) (195)	127.0 C.Y.	SPECIAL MODIFICATION OF WORK METHODS TO ACCOMMODATE/PROTECT UNDERGROUND FACILITIES WITH LIMITED COVER **Unit price bid shall not be less than: $ 47.00**	$	.	$	.
JB 710.1(CE) (196)	138.0 L.F.	REMOVAL OF ABANDONED UTILITY STEEL/CAST IRON/ PLASTIC PIPES, UP TO AND INCLUDING 12" DIAMETER PIPE **Unit price bid shall not be less than: $ 13.00**	$	.	$	.

NEW YORK CITY DEPARTMENT OF DESIGN AND CONSTRUCTION
DIVISION OF INFRASTRUCTURE - BUREAU OF DESIGN

Contract PIN 8502018SE0015C
Project ID SEQ200531

COL. 1 ITEM NUMBER (SEQUENCE NO.)	COL. 2 ENGINEER'S ESTIMATE OF QUANTITIES	COL. 3 CLASSIFICATIONS	COL. 4 UNIT PRICES (IN FIGURES) DOLLARS	CTS	COL. 5 EXTENDED AMOUNTS (IN FIGURES) DOLLARS	CTS
JB 802A(CE) (197)	50.0 S.F.	SPECIAL CARE EXCAVATION AND RESOTRATION FOR SIDEWALK WORK **Unit price bid shall not be less than: $ 3.00**	$	.	$	.
JB 802B(CE) (198)	10.0 L.F.	SPECIAL CARE EXCAVATION AND RESOTRATION FOR CURB WORK **Unit price bid shall not be less than: $ 10.00**	$	.	$	.
JB 900 (TW) (199)	1.0 F.S.	EXTRA UTILITY WORK COSTS ALLOWANCE PRICE BID SHALL BE FOR THE FIXED SUM OF $ 1,396.00	$ 1,396	.00	$ 1,396	.00
JB 900(CE) (200)	1.0 F.S.	EXTRA UTILITY WORK COSTS ALLOWANCE PRICE BID SHALL BE FOR THE FIXED SUM OF $ 70,546.00 **Unit price bid shall not be less than: $ 70,546.00**	$ 70,546	.00	$ 70,546	.00

NEW YORK CITY DEPARTMENT OF DESIGN AND CONSTRUCTION
DIVISION OF INFRASTRUCTURE - BUREAU OF DESIGN

Contract PIN 8502018SE0015C
Project ID SEQ200531

COL. 1 ITEM NUMBER (SEQUENCE NO.)	COL. 2 ENGINEER'S ESTIMATE OF QUANTITIES	COL. 3 CLASSIFICATIONS	COL. 4 UNIT PRICES (IN FIGURES) DOLLARS CTS	COL. 5 EXTENDED AMOUNTS (IN FIGURES) DOLLARS CTS
JB 900 (VERZ) (201)	1.0 F.S.	EXTRA UTILITY WORK COSTS ALLOWANCE PRICE BID SHALL BE FOR THE FIXED SUM OF $ 10,000.00 **Unit price bid shall not be less than: $ 10,000.00**	$ 10,000.00	$ 10,000.00
P-1 (202)	14.0 SETS	PHOTO DOCUMENTATION	$	$
PM-01 (203)	5.0 EACH	PLANT MAJOR TREES (2.5" TO 3" CALIPER)	$	$
PM-03 (204)	5.0 EACH	PLANT FLOWERING AND ORNAMENTAL TREES	$	$

NEW YORK CITY DEPARTMENT OF DESIGN AND CONSTRUCTION
DIVISION OF INFRASTRUCTURE - BUREAU OF DESIGN

Contract PIN 8502018SE0015C
Project ID SEQ200531

COL. 1 ITEM NUMBER (SEQUENCE NO.)	COL. 2 ENGINEER'S ESTIMATE OF QUANTITIES	COL. 3 CLASSIFICATIONS	COL. 4 UNIT PRICES (IN FIGURES) DOLLARS	CTS	COL. 5 EXTENDED AMOUNTS (IN FIGURES) DOLLARS	CTS
PM-09 (205)	84.0 EACH	MEDIUM EVERGREEN SHRUBS - CLASS B	$	.	$	.
PM-17 (206)	446.0 EACH	PERENNIALS, #2 can	$	.	$	.
PM-21 (207)	38.0 EACH	GRASSES, #2 can	$	.	$	.
PM-24 (208)	266.0 EACH	GROUND COVERS - #1 can	$	.	$	.

NEW YORK CITY DEPARTMENT OF DESIGN AND CONSTRUCTION
DIVISION OF INFRASTRUCTURE - BUREAU OF DESIGN

Contract PIN 8502018SE0015C
Project ID SEQ200531

COL. 1 ITEM NUMBER (SEQUENCE NO.)	COL. 2 ENGINEER'S ESTIMATE OF QUANTITIES	COL. 3 CLASSIFICATIONS	COL. 4 UNIT PRICES (IN FIGURES) DOLLARS CTS	COL. 5 EXTENDED AMOUNTS (IN FIGURES) DOLLARS CTS
UTL-6.01.1 (209)	4.0 EACH	GAS MAIN CROSSING SEWER UP TO 24" IN DIAMETER (S6.01) **Unit price bid shall not be less than: $ 1,040.00**	$.	$.
UTL-6.01.5 (210)	3.0 EACH	GAS MAIN CROSSING SEWER 60" IN DIAMETER (S6.01) **Unit price bid shall not be less than: $ 2,340.00**	$.	$.
UTL-6.01.8 (211)	20.0 EACH	GAS SERVICES CROSSING TRENCHES AND/OR EXCAVATIONS (S6.01) **Unit price bid shall not be less than: $ 465.00**	$.	$.
UTL-6.03 (212)	2,044.0 L.F.	REMOVAL OF ABANDONED GAS FACILITIES. ALL SIZES. (S6.03) **Unit price bid shall not be less than: $ 15.00**	$.	$.

NEW YORK CITY DEPARTMENT OF DESIGN AND CONSTRUCTION
DIVISION OF INFRASTRUCTURE - BUREAU OF DESIGN

Contract PIN 8502018SE0015C
Project ID SEQ200531

COL. 1 ITEM NUMBER (SEQUENCE NO.)	COL. 2 ENGINEER'S ESTIMATE OF QUANTITIES	COL. 3 CLASSIFICATIONS	COL. 4 UNIT PRICES (IN FIGURES) DOLLARS	CTS	COL. 5 EXTENDED AMOUNTS (IN FIGURES) DOLLARS	CTS
UTL-6.03.1A (213)	621.0 L.F.	REMOVAL OF ABANDONED GAS FACILITIES WITH POSSIBLE COAL TAR WRAP. ALL SIZES. (FOR CON EDISON WORK ONLY) (S6.03) **Unit price bid shall not be less than: $ 25.00**	$	.	$	.
UTL-6.04 (214)	9.0 EACH	ADJUST HARDWARE TO GRADE USING SPACER RINGS/ADAPTORS. (STREET REPAVING.) (S6.04) **Unit price bid shall not be less than: $ 35.00**	$	.	$	.
UTL-6.05 (215)	3.0 EACH	ADJUST HARDWARE TO GRADE BY RESETTING. (ROAD RECONSTRUCTION.) (S6.05) **Unit price bid shall not be less than: $ 65.00**	$	.	$	.
UTL-6.06 (216)	400.0 C.Y.	SPECIAL CARE EXCAVATION AND BACKFILLING (S6.06) **Unit price bid shall not be less than: $ 180.00**	$	.	$	.

NEW YORK CITY DEPARTMENT OF DESIGN AND CONSTRUCTION
DIVISION OF INFRASTRUCTURE - BUREAU OF DESIGN

Contract PIN 8502018SE0015C
Project ID SEQ200531

COL. 1 ITEM NUMBER (SEQUENCE NO.)	COL. 2 ENGINEER'S ESTIMATE OF QUANTITIES	COL. 3 CLASSIFICATIONS	COL. 4 UNIT PRICES (IN FIGURES) DOLLARS CTS	COL. 5 EXTENDED AMOUNTS (IN FIGURES) DOLLARS CTS
UTL-6.07 (217)	50.0 C.Y.	TEST PITS FOR GAS FACILITIES (S6.07) **Unit price bid shall not be less than: $ 100.00**	$.	$.
UTL-GCS-2WS (218)	1.0 F.S.	GAS INTERFERENCES AND ACCOMMODATIONS PRICE BID SHALL BE FOR THE FIXED SUM OF $ 50,000.00	$ 50,000.00	$ 50,000.00

NEW YORK CITY DEPARTMENT OF DESIGN AND CONSTRUCTION
DIVISION OF INFRASTRUCTURE - BUREAU OF DESIGN

Contract PIN 8502018SE0015C
Project ID SEQ200531

COL. 1 ITEM NUMBER (SEQUENCE NO.)	COL. 2 ENGINEER'S ESTIMATE OF QUANTITIES	COL. 3 CLASSIFICATIONS	COL. 4 UNIT PRICES (IN FIGURES) DOLLARS	CTS	COL. 5 EXTENDED AMOUNTS (IN FIGURES) DOLLARS	CTS
			SUB-TOTAL:		$	.
6.39 A (219)	1.0 LUMP SUM	MOBILIZATION PRICE BID SHALL NOT EXCEED 4% OF THE ABOVE SUB-TOTAL PRICE.			$	.
			TOTAL BID PRICE:		$	.

PLEASE BE SURE A LEGIBLE BID IS ENTERED FOR EACH ITEM.

THE BIDDER SHALL INSERT THE TOTAL BID PRICE IN THE BID FORM ON PAGE C-4 OF THIS BID BOOKLET.

Project ID: SEQ200531

VOLUME 3 OF 3

TABLE OF CONTENTS

SECTION	DESCRIPTION	PAGES
SPECIFICATIONS	AND STANDARDS OF NEW YORK CITY	1 OF 2 AND 2 OF 2
SCHEDULE A	GENERAL CONDITIONS TO CONSTRUCTION CONTRACT	SA-1 to SA-12
R - PAGES	REVISIONS TO STANDARD SPECIFICATIONS	R-1 to R-2
I – PAGES	NEW SECTIONS	I-1 to I-125
S – PAGES	SPECIAL PROVISIONS	S-1 to S-42
SW - PAGES	SEWER AND WATER MAIN SPECIFICATIONS	SW-1 to SW-13
EP7 – PAGES	GAS COST SHARING (EP-7) STANDARD SPECIFICATIONS	EP7-1 to EP7-28B
HAZ – PAGES	SPECIFICATIONS FOR HANDLING TRANSPORTATION AND DISPOSAL OF NONHAZARDOUS AND POTENTIALLY HAZARDOUS CONTAMINATED MATERIALS	HAZ-1 TO HAZ-361
JB – PAGES	JOINT BID SECTION	JB-1 to JB-44

I - PAGES

NEW SECTIONS

NOTICE

THE PAGES CONTAINED HEREIN ARE NEW SECTION OF WORK THAT SHALL APPLY TO AND BECOME A PART OF THE CONTRACT.

UNLESS OTHERWISE SPECIFIED, ALL SECTIONS, SUBSECTIONS, ARTICLES, AND SUBARTICLES AS REFERRED TO HEREIN (I-PAGES) ARE TO THE NEW YORK CITY DEPARTMENT OF TRANSPORTATION'S (NYCDOT'S) STANDARD HIGHWAY SPECIFICATIONS, DATED AUGUST 1, 2015, AS CURRENTLY AMENDED BY THE R-PAGES.

TABLE OF CONTENTS

SECTION	DESCRIPTION	PAGE NO.
4.13 GI-A	4" CONCRETE SIDEWALK	I-1
6.09 GI	CONCRETE HEADER	I-2
6.51 GI-BD	PAVEMENT KEY ALONG CURB (3' TO 6' WIDE)	I-4
6.70 GI	MAINTENANCE AND PROTECTION OF TRAFFIC	I-6
7.01 MGF	METAL GRATE AND FRAME	I-8
7.13 GI	MAINTENANCE OF SITE	I-10
GI-2.06	L-SHAPED EDGING	I-12
GI-2.07	CLEAN OPEN GRADED STONE	I-13
GI-2.08	HDPE BARRIER	I-18
GI-2.08 L	IMPERMEABLE LINER	I-20
GI-2.09 DR	GEOTEXTILE FABRIC FOR DRAINAGE	I-22
GI-2.10 PC	STEEL TREE GUARDS (POWDER COATED)	I-26
GI-2.13A	ENGINEERED SOIL AND SAND	I-29
GI-2.16	HIGH DENSITY POLYETHYLENE (HDPE)	I-35
GI-2.16A	PVC PIPE (NOT A PAY ITEM)	I-38
GI-2.17A	GABION (WITH CLEAN OPEN GRADED STONE)	I-41
GI-2.19	HDPE STORMWATER CHAMBER	I-43
GI-4.02	EARTH EXCAVATION	I-45
GI-4.03	EXCAVATION OF BOULDERS IN OPEN CUT	I-48
GI-4.06	GI CONCRETE ELEMENTS	I-49
GI-5.02	DEWATERING (NOT A PAY ITEM)	I-53

SECTION	DESCRIPTION	PAGE NO.
GI-5.05	PLANTING TREES IN RIGHT OF WAY BIOSWALES, RIGHT OF WAY GARDENS AND STORMWATER GREENSTREETS (NOT A PAY ITEM)	I-54
GI-5.06	TREES (PROTECTION, PRUNING, REMOVAL, STUMP REMOVAL, TRANSPLANTING, AND PLANTING) (NOT A PAY ITEM)	I-59
GI-5.09	WATERING AND WEEDING DURING MAINTENANCE PERIOD (NOT A PAY ITEM)	I-67
GI-5.10	STONE COLUMN	I-69
GI-5.21	SAWCUTTING PAVEMENT	I-71
GI-5.35	SLEEVE FOR UTILITY CROSSINGS	I-73
GI-8.20	JUTE MESH	I-75
GI-9.30	TEMPORARY CLOSURE AND PROTECTION OF ROW GI PRACTICE (NOT A PAY ITEM)	I-77
GM-11	HAND AND/OR PNEUMATIC EXCAVATION	I-79
P-1	PHOTO DOCUMENTATION	I-81
PM- 01 thru PM-24	TREES, SHRUBS, WOODY, AND HERBACEOUS PLANT MATERIAL	I-85
R-1	FINAL RECORD DOCUMENTS (NOT A PAY ITEM)	I-102

SECTION 4.13 GI-A
4" CONCRETE SIDEWALK

4.13GI-A.1 INTENT

This section describes construction of 4" Concrete Sidewalk (Pigmented and Unpigmented).

4.13GI-A.2 DESCRIPTION

Concrete Sidewalk shall be of the width specified and shall be laid on a foundation six (6") inches thick.

Sidewalk shall consist of a single course of concrete four (4") inches thick, except in driveways and corner quadrants where it shall be seven (7") inches thick to be paid for under Item No. 4.13 GI-BA and 4.13 GI-BB, as appropriate.

4.13GI-A.3 MATERIALS AND METHODS

All materials and methods for Item Nos. 4.13 GI-AA and 4.13 GI-AB shall comply with the requirements of Section 4.13 of the NYC Department of Transportation Standard Highway Specifications.

4.13GI-A.4 MEASUREMENT

The area of 4" concrete sidewalk in square feet and the amount to be paid for under each item shall be determined by cores as provided in Section 5.04 of the Standard Highway Specifications.

In determining the area of Concrete Sidewalk to be paid for under each type, the areas occupied by the tree wells, bases of columns, manhole heads, gate boxes and similar structures will be deducted from the measured area of concrete sidewalk when they measure more than one (1) square foot and will not be deducted when they measure one (1) square foot or less.

The Contractor is not to proceed with any sidewalk construction unless ordered to do so by the Commissioner or his authorized representative.

4.13GI-A.5 PRICE TO COVER

The contract price per square foot for each type of 4" Concrete Sidewalk shall cover the cost of all labor, materials, equipment, insurance, and incidentals required to construct concrete sidewalk of the thickness specified, complete, in place with foundation material in accordance with Subsection 4.13.4.(B) of the NYC Department of Transportation Standard Highway Specifications. The unit prices bid shall also include, but not be limited to, pigment when specified, curing, special scoring as may be required to match that of the adjacent existing sidewalk, and excavation (other than rock excavation) and backfilling, in full compliance with the requirements of the specifications, to construct test standards, to furnish such samples for testing and to provide such testing equipment, laboratory space and facilities as may be required and the cost of maintaining the sidewalk in good condition as specified in Section 5.05 of the NYC Department of Transportation Standard Highway Specifications.

Payment will be made under:

Item No.	Item	Pay Unit
4.13 GI-AA	4" CONCRETE SIDEWALK (UNPIGMENTED)	S.F.
4.13 GI-AB	4" CONCRETE SIDEWALK (PIGMENTED)	S.F.

SECTION 6.09 GI
CONCRETE HEADER

6.09GI.1 INTENT

This section describes construction of Concrete Headers.

6.09GI.2 DESCRIPTION

(A) L-SHAPED - L-shaped Concrete Headers shall be six (6") inches wide at the top, fifteen (15") or nineteen (19") inches deep, and nine (9") wide at the base and shall be laid on a foundation three (3") inches thick, and shall be constructed to the lines and grades as shown on the NYC Department of Environmental Protection Standard Design and Guidelines for Green Infrastructure.

(B) T (Trapezoid) - shaped Concrete Headers shall be six (6") inches wide at the top, fifteen (15") or nineteen (19") inches deep, and nine (9") wide at the base and shall be laid on a foundation three (3") inches thick, and shall be constructed to the lines and grades as shown on the NYC Department of Environmental Protection Standard Design and Guidelines for Green Infrastructure.

6.09GI.3 MATERIALS AND METHODS

All materials and methods shall comply with the requirements of Sections 6.09.3. and 6.09.4., as appropriate, in the NYC Department of Transportation Standard Highway Specifications.

6.09GI.4 MEASUREMENT

The quantity to be measured for payment shall be the number of linear feet of concrete header constructed, complete, in place, measured along the center line of the header.

6.09GI.5 PRICE TO COVER

The contract price per linear foot of concrete header shall cover the cost of furnishing all labor, materials, plant, equipment, insurance, and incidentals required to construct concrete header, complete, in place, and shall include, but not be limited to, curing, furnishing samples for testing as may be required and maintaining the concrete header in good condition as required in Section 5.05 of the NYC Department of Transportation Standard Highway Specifications, all in full compliance with the Contract Drawings, the specifications and directions of the Engineer.

The cost of excavation and backfilling will be paid for under other contract items.

Payment will be made under:

Item No.	Item	Pay Unit
6.09-GI-L1	CONCRETE HEADER, L-SHAPE (6" WIDE AT TOP X 15" DEEP X 9" WIDE AT BASE)	L.F.
6.09 GI-L2	CONCRETE HEADER, L-SHAPE (6" WIDE AT TOP X 19" DEEP X 9" WIDE AT BASE)	L.F.

6.09 GI-T1	CONCRETE HEADER, TRAPEZOID-SHAPE (6" WIDE AT TOP X 15" DEEP X 9" WIDE AT BASE)	L.F.
6.09 GI-T2	CONCRETE HEADER, TRAPEZOID-SHAPE (6" WIDE AT TOP X 19" DEEP X 9" WIDE AT BASE)	L.F.

SECTION 6.51 GI-BD
PAVEMENT KEY ALONG CURB (3' TO 6' WIDE)

6.51GI-BD.1 INTENT

This section describes the work of installing pavement keys to grind (mill) and remove a portion of the existing asphaltic wearing course and granular base to remove depressed or damaged roadway, to facilitate storm water run off (without ponding), to facilitate installation of new pavement and shall dispose of all asphaltic millings and other material; all in accordance with the specifications, the Contract Drawings, and the directions of the Engineer.

6.51GI-BD.2 DESCRIPTION

The construction of pavement keys shall consist of saw cutting, grinding (milling), and removing a portion of the existing wearing course and granular base to the required depth and width, generally next to curb or areas of poor pavement; all in accordance with the Contract Drawings, the specifications and the directions of the Engineer.

6.51GI-BD.3 METHODS

All methods shall comply with the requirements of Section 6.75 of the NYC Department of Transportation Standard Highway Specifications.

No debris will be allowed to accumulate at the site.

All grinding (milling) shall be done in conjunction with the installation of new or reset curb, precast porous concrete gutter, and aprons.

6.51GI-BD.4 USES

Pavement Key along the curb line (various widths) shall be used in the following locations:

(A) At all locations requiring gutter adjustments (3' to 6' wide) both inside and outside the green infrastructure practice's curb limits as directed. To lower roadway or reshape roadway to eliminate ponding.

(B) To remove asphaltic bumps or depression or badly crazed areas in the roadway to provide positive surface flow into the green infrastructure practice's inlet area.

(C) Grinding (milling) shall be to the required depth to facilitate an average of 2" resurfacing after the work is completed.

(D) At locations to be excavated under other contract items.

6.51GI-BD.5 MEASUREMENT

The quantity to be measured for payment, under Item 6.51 GI-BD, shall be the number of cubic yards of grinding existing asphaltic concrete wearing course actually cut out to provide a pavement key along the curb as directed by the Engineer.

Measurement shall be a vehicle measurement based on the number of cubic yards of millings removed from the site to the satisfaction of the Engineer, measured in trucks at the place of loading. Only water level loads that have been raked by the Contractor to a flat exposed surface will be accepted and no allowance will be made for any crown or peak of the load.

6.51GI-BD.6 PRICE TO COVER

The contract price per cubic yard of Item 6.51 GI-BD, shall cover the cost of furnishing all labor, plant, equipment, insurance, and necessary incidentals required and completing the work, including saw cutting at beginning and end of grinding limits, cutout of existing asphaltic material at street hardware and at saw cut joints, loading all grindings and excavated material into dump trucks, and removing and disposing of said material away from the site, all in accordance with the Contract Drawings, the specifications and the directions of the Engineer.

Payment will be made under:

Item No.	Item	Pay Unit
6.51 GI-BD	PAVEMENT KEY ALONG CURB LINE (3' TO 6' WIDE)	C.Y.

SECTION 6.70-GI
MAINTENANCE AND PROTECTION OF TRAFFIC

6.70GI.1 DESCRIPTION

Under this section the Contractor shall be required to complete the work of maintaining and protecting all pedestrian and vehicular traffic within the limits of each Green Infrastructure Practice, as defined and shown on these I-pages, and noted in the Special Provisions (S – Pages) of this Project, to be constructed under the contract. This shall include, but not be limited to, furnishing, placing, relocating and removing, when directed, all necessary temporary warning and regulatory signs and temporary traffic control devices to re-route and protect traffic - all in accordance with an approved Maintenance and Protection of Traffic (MPT) Plan, the Contract Drawings, the specifications and directions of the Engineer.

Prior to performing any work in the Contract, if there are no MPT plans provided in the contract documents or the Contractor is proposing a change to the contract MPT plan, the Contractor shall prepare and submit an MPT Plan for the work required under the contract. The MPT Plan shall be prepared by a New York State Licensed Professional Engineer who is a qualified and experienced in Traffic Engineering and Work Site Safety. The MPT Plan shall include all necessary and required legal precautions for the protection of traffic and for the safety of the public, and shall be subject to approval by the New York City Department of Transportation Office of Construction Mitigation and Coordination (OCMC) and the Engineer.

The provisions of this section are supplementary to and do not abrogate the General Conditions (Section 1.06) of the NYC Department of Transportation Standard Highway Specifications, the General Notes on the Contract Drawings relating to maintenance and protection of traffic following this Section or the OCMC Traffic Stipulations. Furthermore, any conditions pertaining to the maintenance and protection of traffic during the life of the contract which are addressed in the General Conditions and in the General Notes on the Contract Drawings, whether or not addressed under this Section, shall be deemed as having been addressed under this Section.

6.70GI.2 MATERIALS AND METHODS

All materials and methods shall comply Section 6.70 of the NYC Department of Transportation Standard Highway Specifications.

6.70GI.3 NONCONFORMANCE

If the Contractor fails to maintain and protect traffic adequately and safely for a period of three (3) hours at a Green Infrastructure practice under construction, the Engineer may correct the adverse conditions by any means he deems appropriate, and shall deduct the cost of the corrective work from any monies due the Contractor.

However, where major nonconformance with the requirements of this specification is noted by the Engineer, and prompt Contractor compliance is deemed not to be obtainable, all contract work may be stopped by direct order of the Engineer, regardless of whether corrections are made by the Engineer as stated in the paragraph above.

Furthermore, in addition to the remedies specified above, in the event the Contractor fails to comply, within three (3) consecutive hours after written notice from the Engineer, with the requirements of the contract and the specifications in the matter of providing facilities and services for the maintenance and protection of traffic, the Contractor shall pay to the City of New York, until such notice has been

complied with or rescinded, the sum specified in Schedule A per calendar day, for each instance of such failure, as liquidated damages and not as a penalty, for such default.

Any money due the City of New York under this provision shall be deducted from the amounts due or to become due to the Contractor for work performed under the contract.

6.70GI.4 MEASUREMENT

The quantity to be measured for payment shall be the number of Green Infrastructure practices constructed under this contract for which the Contractor has provided adequate Maintenance and Protection of Traffic. Measurement shall be made on a one-time basis for each Green Infrastructure practice and no additional measurement or payment will be made for any removals, reinstallations or resetting of materials and equipment as may be required at the same Green Infrastructure practice's location. Where there are two (2) or more Green Infrastructure practices in the same block, each shall be counted as a separate Green Infrastructure practice facility.

6.70GI.5 PRICE TO COVER

The price bid for Maintenance and Protection of Traffic shall be a unit price for EACH Green Infrastructure practice which shall cover the cost of all labor, materials, plant, equipment, insurance, and incidentals required to maintain and protect pedestrian and vehicular traffic, including, but not limited to, furnishing, installing, relocating and maintaining lighted barricades, plastic barrels with flashers, temporary timber curbs, construction signs, flashing arrow boards, variable message signs, safety orange construction fencing, chain link fence, temporary pedestrian steel barricades, warning devices, cones, flags, lights, temporary ribbon, temporary pavement markings, etc., unless otherwise provided for under other scheduled contract bid items; providing and maintaining roadway plates; constructing and maintaining temporary ramps; and all incidentals necessary for completing the work at each Green Infrastructure practice; all in accordance with the Contract Drawings, approved MPT Plans, the specifications, and the directions of the Engineer. However, no additional payment will be made no matter how many time an MPT set up is removed, reinstalled or changed after the initial MPT set up at each Green Infrastructure practice.

Payment for Maintenance and Protection of Traffic at each Green Infrastructure practice will be made as follows:

> Fifty (50%) percent of the unit price bid for each Green Infrastructure practice will be paid when the initial MPT set up is satisfactorily installed at the Green Infrastructure practice's location and the remaining fifty (50%) percent of the unit price bid will be paid for that location upon either completion of installed of the Steel Tree Pit Guard or after the final temporary fencing is removed after planting, as applicable.

Providing and placing of Asphaltic Concrete Mixture and/or Binder Mixture for temporary ramps and for temporary pavement and trench restorations will be paid for under the appropriate scheduled contract items.

Payment will be made under:

Item No.	Item	Pay Unit
6.70-GI	MAINTENANCE AND PROTECTION OF TRAFFIC	EACH

SECTION 7.01 MGF
METAL GRATE AND FRAME

7.01.1 INTENT

This section describes the installation of metal gratings, frames, and accessories where directed.

7.01.2 DESCRIPTION

Under this section, the Contractor shall install metal frames and gratings all in accordance with the Contract Drawings, the specifications, and the directions of the Engineer.

7.01.3 MATERIALS

Standard Frames and Gratings shall be of a Stainless-Steel Swage Lock Rectangular Bar Grating type 7-SGSS-4, as manufactured by Ohio Gratings, Inc., 5299 Southway St. SW, Canton, Ohio 44706, or an approved equivalent, and shall comply with the following requirements:

(A) Material to be Hot-Dip Galvanized Carbon Steel ASTM Grade A36.

(B) Bearing bars shall be 3/4" x 3/16" edge of plate flush and true, spaced 7/16" on center as to provide 1/4" space between bars.

(C) Cross bars to be tubular cross section, spaced 4" on center.

(D) Bearing bars and cross bars shall comply with ASTM A-123 Hot-Dip Galvanized Steel Products.

(E) Fabricate by assembling tubular cross bars through round shaped holes in rectangular bearing bars will be permanently locked in place by swaging.

(F) Top surface of grate shall be a slip resistant surface in accordance to US Dept. of Justice Americans with Disabilities Act – 2010 Design Standards Section 302.

(G) Grating frame supports shall be of 2" x 2" x 1/4" angles with galvanized steel grating fasteners as per ASTM A-153 Hot-Dip Galvanized Steel Hardware.

(H) Overall dimensions, details, directions of bearing bars, and number of panels shall be in accordance with the Contract Drawings.

7.01.4 CONSTRUCTION METHODS

General

All work shall be done in accordance with the directions of the Engineer.

The Contractor shall take field measurements prior to preparation of final shop drawings and fabrication where required to ensure proper fitting of the work.

Furnishing and Installing Metal Grate and Frame

Prior to grating installation, the Contractor shall inspect supports for correct alignment and conditions

for proper attachment and support of the gratings. Any inconsistencies between contract drawings and supporting structure deemed detrimental to grating placement shall be reported in writing to the Engineer or owner's agent prior to placement.

The Contractor shall install grating in accordance with shop drawings and standard installation clearances as recommended by ANSI/NAAMM MBG-531-09 Metal Bar Grating Manual. The Contractor shall use approved attachment system and fasteners to secure grating to supporting members as shown on plans.

7.01.5 SUBMITTALS

The Contractor shall submit the manufacturer's catalog pages including load tables, anchor details and standard installation details. The Contractor shall submit for approval shop drawings for fabrication and erection of all gratings, based on construction drawings of current issue. Include plans, elevations, and details of sections and connections as required. Show type and location of all fasteners. The Contractor shall submit samples of Grating and Anchorage system for approval.

7.01.6 MEASUREMENT

The quantities to be measured for payment under each item shall be the number of square feet of metal grating satisfactorily installed measured within the frame perimeter.

7.01.7 PRICE TO COVER

The contract price bid shall be a unit price per square foot and shall cover the cost of all labor, material, equipment, insurance, and incidentals necessary to install frames and grates, all in accordance with the Contract Drawings, the specifications, and the directions of the Engineer.

Payment will be made under:

Item No.	Item	Pay Unit
7.01 MGF	METAL GRATE AND FRAME	S.F.

SECTION 7.13-GI
MAINTENANCE OF SITE

7.13GI.1 DESCRIPTION

This section describes the maintenance, protection and cleanup of the construction site at each Green Infrastructure practice facility. The Contractor is placed on notice that he shall be required to provide a safe and clean site throughout all phases of the work and during all of his operations at each Green Infrastructure practice facility, and further that the monitoring by the City of the Contractor's site maintenance, site protection and site clean up is considered for the purposes of the contract to be a project objective necessary to eliminate and/or mitigate public disruption and inconvenience, and to insure public health and safety. The Contractor shall therefore, at all times, conduct this operation in a manner which promotes a clean site and insures the convenience, safety and health of general users consisting of, but not limited to, the motorist, the pedestrian and the abutting property owners/tenants, as well as those of his own employees.

The provisions of this section are supplementary to and do not abrogate the General Conditions (Section 1.06) of the NYC Department of Transportation Standard Highway Specifications or the General Notes on the Contract Drawings relating to the protection and cleanup of the site, and the delivery and storage of materials at the site of each Green Infrastructure practice facility. Furthermore, any conditions pertaining to the maintenance, protection and cleanup of the construction site during the life of the contract which are addressed in the General Conditions and in the General Notes on the Contract Drawings, whether or not addressed under this Section, shall be deemed as having been addressed under this Section.

7.13GI.2 METHODS

All methods shall comply with the requirements of Subsection 7.13.2 of the NYC Department of Transportation Standard Highway Specifications.

7.13GI.3 STORAGE OF MATERIALS AND EQUIPMENT

All storage of materials and equipment shall comply with the requirements of Subsection 7.13.3 of the NYC Department of Transportation Standard Highway Specifications.

7.13GI.4 NONCONFORMANCE

If the Contractor fails to maintain and protect the site of a Green Infrastructure practice under construction adequately and safely for a period of three (3) or more consecutive hours, the Engineer may correct the adverse conditions by any means he deems appropriate, including, but not limited to, "outside services," and shall deduct the cost of the corrective work from any monies due the Contractor.

However, where major nonconformance with the requirements of this specification is noted by the Engineer, and prompt Contractor compliance is deemed not to be obtainable, all contract work may be stopped by direct order of the Engineer, regardless of whether corrections are made by the Engineer as stated in the paragraph above.

Furthermore, in addition to the remedies specified above, in the event the Contractor fails to comply, within three (3) consecutive hours after written notice from the Engineer, with the requirements of the contract and the specifications in the matter of providing facilities and services for the maintenance, protection and cleanup of the construction site, the Contractor shall pay to the City of New York, until

such notice has been complied with or rescinded, the sum shown per calendar day in Schedule A, for each instance of such failure, as liquidated damages and not as a penalty, for such default.

Any money due the City of New York under this provision shall be deducted from the amounts due or to become due to the Contractor for work performed under the contract.

7.13GI.5 MEASUREMENT

The quantity to be measured for payment shall be the number of Green Infrastructure practices constructed under this contract for which the Contractor has provided adequate Maintenance of Site. Measurement shall be made on a one time basis for each Green Infrastructure practice and no additional measurement or payment will be made for maintaining the site at the same Green Infrastructure practice's location. Where there are two (2) or more Green Infrastructure facilities in the same block each be counted as a separate Green Infrastructure practice facility.

7.13GI.6 PRICE TO COVER

The price bid for Maintenance of Site shall be a unit price for EACH Green Infrastructure practice which shall cover the cost of furnishing all labor, materials, plant, equipment, insurance, and incidentals required to maintain, protect and clean up the site at each Green Infrastructure practice, all in accordance with the Contract Drawings, these specifications, and the directions of the Engineer.

Payment under each location will be made in proportion to the percentage of the Green Infrastructure practice actually completed.

Payment will be made under:

Item No.	Item	Pay Unit
7.13-GI	MAINTENANCE OF SITE	EACH

SECTION GI-2.06
L-SHAPED EDGING

GI-2.06.1 INTENT

Under this section, the Contractor shall furnish and install new landscape edging adjacent to the concrete strip in bioswales as specified herein in accordance with the NYC Department of Environmental Protection Standard Design and Guidelines for Green Infrastructure Practices drawings and as directed by the Engineer.

GI-2.06.2 MATERIALS

Edging shall consist of L-shaped PVC or aluminum edge restraint product, a minimum of six (6) inches high by five (5) inches wide, in up to ten (10) foot lengths. The thickness of the material shall be a minimum of 0.15 inches. Drainage holes flush with the horizontal leg shall be present on both the sides of the L-shaped edging. Nine (9) inch minimum length stakes shall be installed a minimum of every two (2) feet on center. The color of the edging shall be black.

Edging shall be Teco-Edg Specialty Edge Restraint manufactured by Oly Ola Edgings, Inc. in Villa Park, IL; GeoEdge Aluminum Green Building Edging manufactured by Permaloc Corporation in Holland, MI; or approved equivalent. Submit product cut sheets as shop drawings for Engineer's approval prior to ordering the product.

GI-2.06.3 DESCRIPTION

The edging shall be installed adjacent to the concrete strip in bioswales where required, as shown on Contract Drawings and in accordance with the specifications and the directions of the Engineer.

GI-2.06.4 METHODS

The edging shall be installed true to line and grade in accordance with the drawings and as directed by the Engineer. The "L" of the edging shall face towards the curb, and the top of the "L" shall be at or below the concrete curb elevation. Crushed stone shall be placed on top of the edging as per the drawings and as directed by the Engineer.

GI-2.06.5 MEASUREMENT AND PAYMENT

The quantity of Landscape Edging to be measured for payment shall be the number of linear feet of edging incorporated in the finished work, to the satisfaction of the Engineer.

The contract price bid per linear foot of Landscape Edging shall cover the cost of all labor, materials, equipment, insurance, and incidentals necessary to furnish and place approved "L" shaped Edging at the site to complete the work including, but not limited to, furnishing and installing 9" stakes, "H" clips and caps for joining lengths of edging; all in accordance with the Contract Drawings, the specifications and the directions of the Engineer.

Payment will be made under:

Item No.	Item	Pay Unit
GI-2.06	L-SHAPED EDGING	L.F.

SECTION GI-2.07
CLEAN OPEN GRADED STONE

GI-2.07.1 INTENT

This section describes the types of clean open graded stone also described as stone cover or open-graded stone base in the NYC Department of Environmental Protection Standard Design and Guidelines for Green Infrastructure Practices drawings.

All materials for this work shall comply with the latest New York State Department of Transportation, Standard Specifications, Coarse Aggregate, Section 703-02. The stone shall be washed and 3/4", 3/8", 1 1/2" and 3" to 4" in sizes.

The thicknesses and locations of the "clean open-graded stone" shall be as shown on the Contract Drawing Details or as determined by field conditions and ordered by the Engineer.

GI-2.07.2 MATERIALS

Use of screened rounded gravel is prohibited.

All Clean open graded stone material acceptable under this section shall be sound, hard, durable, unweathered stone freshly broken. All broken stone shall be double-washed and clean and free of all fines and debris, not contaminated with clay, and free from any organic or other deleterious material.

Table 1 – Sizes of Stone

Size	Nominal Size	US Standard Sieve Sizes (Percent Passing)												
		4 in	3½ in	3 in	2½ in	2 in	1½ in	1 in	¾ in	½ in	3/8 in	No. 4	No. 8	No. 16
A	3/8 in. to No. 8	-	-	-	-	-	-	-	-	100	85 to 100	10 to 30	0 to 10	0 to 5
B1	¾ in.	-	-	-	-	-	-	100	0 to 15	-	-	-	-	-
B2	¾ in. to 3/8 in.	-	-	-	-	-	-	100	90 to 100	20 to 55	0 to 15	0 to 5	-	-
C	1½ in.	-	-	-	-	100	0 to 15	-	-	-	-	-	-	-
D	3 in. to 4 in.	100	90 to 100	0 to 15	-	-	-	-	-	-	-	-	-	-

Clean Open Graded stone reservoir (Pre-cast Porous Concrete Panel subbase) for gutter systems shall be Size B1 per Table 1. Thickness and width of compacted reservoir course shall be as shown on the Contract Drawings or as otherwise directed by the Engineer.

Clean Open Graded stone reservoir (Permeable Paver subbase) for gutter systems shall be Size C per Table 1. Thickness of compacted reservoir course shall be as shown on the Contract Drawings or as otherwise directed by the Engineer.

Clean Open Graded stone for open graded stone base shall be Size D per Table 1. Thickness and width of un-compacted stone shall be as shown on the Contract Drawings or as otherwise directed by the Engineer.

Un-compacted/screed broken stone for Pre-Cast Porous Concrete Panel leveling course shall be Size A per Table 1. Thickness of un-compacted/ screed leveling course shall be as shown on the Contract Drawings, and as specified below herein, or as otherwise directed by the Engineer.

Un-compacted/screed broken stone for Permeable Paver leveling course shall be Size B2 per Table 1. Thickness of un-compacted/ screed leveling course shall be as shown on the Contract Drawings, and as specified below herein or as otherwise directed by the Engineer.

GI-2.07.3 SUBMITTALS

(A) The Contractor, prior to the start of work, shall submit to the Engineer for approval samples of the clean open graded stone in accordance with the requirements of ASTM D 75. The minimum size of sample shall be in accordance with the requirements of ASTM D 75 – TABLE 1 Minimum size of Field Samples.

(B) Certified material test reports showing that the clean open graded stones meet the specified requirements shall be submitted for each shipment and identified with specific lots prior to installing materials. Clean open graded stones used in the work shall conform to the approved samples.

(C) The manufacturer shall submit certified test date to cover each shipment of the material.

(D) Results of the coarse aggregate gradation analyses, with full reporting of all information in AASHTO sieve sizes, in accordance with the ASTM C 136.

(E) Results of the void-ratio analyses, with full reporting of all information, in accordance with the ASTM C 29.

GI-2.07.4 CONSTRUCTION METHODS

(A) Weather Consideration

(1) Do not place and/or compact broken stone subbase in rain or snow, or on saturated or frozen subgrade.

(2) Do not place and/or screed broken stone base in rain or snow, or on saturated or frozen subbase.

(B) Stockpiling and Sampling of Broken Stone Reservoir and Leveling Course Aggregate

(1) All material shall be stockpiled, unless otherwise directed. Stockpile construction requirements, sampling, testing and acceptance/rejection procedures shall be as stipulated in the New York State Department of Transportation Section 703-02 – Coarse Aggregates.

(2) No material shall be added to a stockpile after the stockpile has been sampled for approval. Only material from approved stockpiles shall be placed on the subgrade for this section. The presence of any oversize particles in the stockpile will be cause for rejection of the entire stockpile. No material shall be removed for use from any stockpile until the stockpile has been sampled, tested, and approved in writing, by the Engineer, for placement on the subgrade. It shall be the duty of the Contractor to furnish suitable and approved excavating equipment for such sampling. Approval of a stockpile for placement on the subgrade shall not relieve, in any degree, the full responsibility of the Contractor to furnish, in its compacted position, a subbase course of select granular materials, the final condition of which conforms to all the requirements of the specifications for this section. In the event the Contractor shall have a plant or procedure resulting in subbase course material of uniform quality, at a rate satisfactory to the Engineer, and such that satisfactory samples for tests can be obtained, the requirement for stockpiling may be waived. Prior approval of the Engineer must be obtained and the work must be done in accordance with such conditions as may be imposed in the approval. Such waiver shall remain in force only so long as a satisfactory material is produced.

(C) Subgrade Preparation

(1) The Subgrade Under The Clean Open Graded Reservoir Course (Sub Base) shall not be compacted or permanently covered with geotextile, unless otherwise shown on the Contract Drawings or directed by the Engineer.

(2) Prepared subgrades shall not be subject to construction equipment traffic.

(3) Where erosion has caused accumulation of sediment or ponding on the subgrade, remove sediment with light equipment and/or manually. Scarify the underlying soils to a minimum depth of 6 inches with a York type rake, or equivalent equipment.

(4) Restore any subgrade areas damaged by erosion, ponding, or traffic compaction to design line and grades prior to installation of storage reservoir course (layer).

(D) Installation of Reservoir Course (Sub base)

(1) The Reservoir Course Subbase will be installed per specification to the thicknesses and width shown on the contract drawings and as directed by Engineer.

(2) Place 1-1/2" (nominal) size open graded stone, over the prepared subgrade and spread and level evenly by raking to the dimensions shown on the contract drawing details. Do not disturb prepared subgrade or shift, wrinkle or fold the geotextile fabric and/or impermeable liner when and where place as shown on the Contract Drawings.

(3) The open graded stone reservoir course material shall be spread in equal thickness layers. The spreading of any layer of this material shall be done with spreader equipment approved by the Engineer, and to such thickness that the maximum depth of the layer, after compaction, will be 6 inches. Spreading from piles dumped on the roadway will not be permitted. No

segregation of large or fine particles will be allowed, but the material, as spread, shall be well graded, with no pockets of fine material. Water shall be added in such amounts as the Engineer may consider necessary to obtain satisfactory compaction.

(4) Compact layers with an approved vibrating plate compactors or impact rammers until there is no visible movement, weaving or deflection in the surface of the broken stone reservoir course. All the equipment shall be approved by Engineer with regards to adjacent structures.

(5) The surface tolerance of the compacted broken stone reservoir course shall be + 3/4 in. under a 10-ft straightedge.

(6) The Contractor shall assume full responsibility for any contamination and/or degradation of any part of this base during construction and shall, at his own expense, remove any and all portions of this base which do not conform to the requirements of these specifications and replace these portions with specified material.

(E) Installation of Open Graded Stone Base

(1) The Open Graded Stone Base will be installed per specification to the thicknesses and width shown on the contract drawings and as directed by Engineer.

(2) The Open Graded Stone Base shall be placed in equal thickness layers. Prior to backfilling with Open Graded Stone Base the subgrade of the Green Infrastructure asset must be scarified to ensure no compaction. The placing of any layer of this material shall be done so by gravity with no additional compaction to ensure the required void-ratio is maintained. No segregation of large or fine particles will be allowed, but the material, as placed, shall be well graded, with no pockets of fine material.

(3) The Contractor shall assume full responsibility for any contamination and/or degradation of any part of this base during construction and shall, at his own expense, remove any and all portions of this base which do not conform to the requirements of these specifications and replace these portions with specified material.

(F) Installation of Leveling Course (Screed Base Course)

(1) Pre-cast Porous Panels leveling course base. All the materials shall be as described above in this specification. The leveling course will be installed to the thicknesses and widths shown on the contract drawings with a minimum thickness of three (3") inches. The cost of this leveling course deemed be included.

(2) Pre-cast Permeable Pavers leveling course base. All the materials shall be as described above in this specification. The leveling course will be installed to the thicknesses and widths shown on the contract drawings with a minimum thickness of six (6") inches. The cost of this leveling course deemed to be included.

(3) Verify that the open graded stone base, as shown on the Contract Drawings, has been properly placed within the trench and compacted as approved and accepted by the Engineer before leveling course is placed.

GI-2.07.5 MEASUREMENTS

The quantity of CLEAN OPEN GRADED STONE to be measured for payment shall be the number of CUBIC YARDS (CY) of open graded stone incorporated in the finished work, measured in place in cubic yards. The thickness of the leveling course shall NOT be included in this measurement.

GI-2.07.6 PRICE TO COVER

The contract price bid per cubic yard of CLEAN OPEN GRADED STONE shall cover the cost of all labor, materials, equipment, insurance, and necessary incidentals required to complete the work, including, but not limited to, furnishing, and laying open graded stone, subgrade preparation, compaction and furnishing and applying water; all in accordance with the Contract Drawings, the specifications, and the directions of the Engineer.

Payment for furnishing and installing GEOTEXTILE FABRIC will be made under Item No. Gl-2.09DR. Payment for furnishing and installing RESERVOIR COURSES will be made under Item No. Gl-2.07B and GI-2.07C. Payment for furnishing and installing of LEVELING COURSE shall be included..

Payment will be made under:

Item No.	Item	Pay Unit
GI-2.07A	3/8" CLEAN OPEN GRADED STONE	C.Y.
GI-2.07B	3/4" CLEAN OPEN GRADED STONE	C.Y.
GI-2.07C	1-1/2" CLEAN OPEN GRADED STONE	C.Y.
GI-2.07D	3"-4" CLEAN OPEN GRADED STONE	C.Y.

SECTION GI-2.08
HDPE BARRIER

GI-2.08.1 INTENT

This section describes the HDPE BARRIER. The purpose of the High Density Polyethylene (HDPE) Barrier is to provide an impermeable layer which does not allow water to pass through it. The HDPE barrier shall be furnished and installed as specified herein in accordance with the NYC Department of Environmental Protection Standard Design and Guidelines for Green Infrastructure Practices drawings and as directed by the Engineer.

GI-2.08.2 MATERIALS

The HDPE barrier shall consist of High Density Polyethylene (HDPE) Geomembrane sheets not less than 80 mil thickness, meeting or exceeding Geosynthetic Research Institute (GRI) Test Method GM13.

GI-2.08.3 SUBMITTALS

(A) The Contractor, prior to the start of work, shall submit to the Engineer for approval samples of the geomembrane in accordance with the requirements of Section 1.06.31 of the NYC Department of Transportation Standard Highway Specifications, and methods of splicing permitted at utility crossings when directed by the Engineer.

(B) Certified material test reports showing that the geomembrane meet the specified requirements shall be submitted for each shipment and identified with specific lots prior to installing materials. Material test reports shall meet the requirements of ASTM and GRI test method GRI GM 13.

(C) The manufacturer shall submit certified test date to cover each shipment of the material.

GI-2.08.4 CHEMICAL AND PHYSICAL REQUIREMENTS

(A) HDPE geomembrane sheets supplied for the project shall meet or exceed all required physical characteristics as defined below:

(1) HDPE Geomembrane - High quality, high density polyethylene (HDPE) geomembrane specially formulated with virgin formulated polyethylene.

(2) Thickness - Thickness shall not be less than (minimum average) 80 mil, measured in accordance with ASTM D5199.

(3) Density - The Density shall not be less than 59 lb./ft3, measured in accordance with ASTM D1505.

(4) Tear resistance - Tear resistance shall not be less than 40 lb., measured in accordance with ASTM D1004.

(5) Puncture Resistance - Puncture Resistance shall not be less than 100 lb., measured in accordance with ASTM D4833.

(6) The HDPE Barrier shall be strong enough to resist both rot and insects.

GI-2.08.5 METHODS

(A) Delivery - Deliver materials to site in manufacturer's original, unopened packaging, with labels clearly identifying product name and manufacturer.

(B) Storage - Store materials in clean, dry area in accordance with manufacturer's instructions.

(C) Handling - Protect materials during handling and installation to prevent damage.

(D) Prior to the installation of the HDPE Barrier, the Contractor shall excavate the Bioswale area to the satisfaction of the Engineer.

(E) Install HDPE Barrier as indicated on the Standard Design and Guidelines for Green Infrastructure Practices drawings.

(F) The HDPE Barrier shall be placed in one piece directly on the vertical face of the excavation. No splicing will be permitted, except at utility crossings.

(G) No equipment, materials or machinery shall be placed on or be transported over exposed HDPE Barrier.

(H) HDPE Barrier shall be placed as shown on the plans and as directed by the Engineer. Care shall be taken in the placement of backfill under other items so as to prevent dislocation of the HDPE Barrier. If the HDPE Barrier is ruptured during installation, the rupture shall be covered with a patch of new HDPE Barrier that will overlap the undamaged area by at least six (6") inches in all directions. No additional payment will be made for the repair.

GI-2.08.6 MEASUREMENT

The quantity of HDPE Barrier to be measured for payment shall be the number of square feet of geomembrane installed at the site to the satisfaction of the Engineer. Measurement shall be made to the nearest square foot installed at each green infrastructure practice facility.

GI-2.08.7 PRICE TO COVER

The contract price for HDPE Barrier shall be a unit price bid per square foot and shall cover the cost of all labor, material, equipment, insurance, and incidentals necessary to furnish, handle, store, and install HDPE Barrier sheets, including, but not limited to, sheeting and bracing, cutting holes in the sheets for utilities, furnishing and installing stainless steel anchor bars and fastenings at the top of the sheet and caulking bead along the top seam of the HDPE membrane and the concrete curb or header; all in accordance with the Contract Drawings, the specifications and the directions of the Engineer.

Payment will be made under:

Item No.	Item	Pay Unit
GI-2.08	HDPE BARRIER	S.F.

SECTION GI-2.08 L
IMPERMEABLE LINER

GI-2.08L.1 INTENT

This section describes the IMPERMEABLE LINER also described as IMPERMEABLE MEMBRANE in the NYC Department of Environmental Protection Standard Design and Guidelines for Green Infrastructure Practices drawings. The purpose of the Impermeable Liner is to be utilized as a barrier in between the leveling course and the open-graded stone base layer for Hydraulically Connected Right-of-Way Greenstrips and Right-of-Way Infiltration Basin green infrastructure practices. The Impermeable Liner shall be furnished and installed as specified herein in accordance with the NYC Department of Environmental Protection Standard Design and Guidelines for Green Infrastructure Practices drawings and as directed by the Engineer.

GI-2.08L.2 MATERIALS

(A) The Impermeable Liner shall be made of Polyvinyl Chloride (PVC) geomembrane of 10 mil thickness, meeting or exceeding the requirements of ASTM D7176 Standard Specification for PVC geomembranes used in buried applications.

(B) Each geomembrane liner roll shall be wrapped with a material that will protect the liner, including the ends of the roll, from damage due to shipment, water, sunlight, and contaminants. The protective wrapping shall be maintained during periods of shipment and storage in accordance to ASTM D4873 and ASTM D7865.

(C) During storage, geomembrane liner rolls shall be elevated off th

(D) e ground and adequately covered to protect them from the following: site construction damage, precipitation, extended ultraviolet radiation including sunlight, chemicals that are strong acids or strong bases, and any environmental condition that may damage the physical property values of the liner.

(E) If the geomembrane is damaged, the GEOSYNTHETICS CONTRACTOR shall make all repairs and replacements in a timely manner, so as to prevent delays in the progress of the work

(F) The finished liner shall be free of pinholes, blisters, and contaminants.

GI-2.08L.3 SUBMITTALS

(A) The Contractor, prior to the start of work, shall submit to the Engineer for approval samples of the impermeable liner in accordance with the requirements of Section 1.06.31 of the NYC Department of Transportation Standard Highway Specifications, and methods of splicing permitted at utility crossings.

(B) Certified material test reports showing that the geomembrane meet the specified requirements shall be submitted for each shipment and identified with specific lots prior to installing materials. Material test reports shall meet the requirements of ASTM and GRI test method GRI GM 13.

(C) The data submitted shall include, where applicable, manufacturer's descriptive literature and installation instructions.

GI-2.08L.4 METHODS

(A) Delivery - Deliver materials to site in manufacturer's original, unopened packaging, with labels clearly identifying product name and manufacturer.

(B) Storage - Store materials in clean, dry area in accordance with manufacturer's instructions.

(C) Handling - Protect materials during handling and installation to prevent damage.

(D) Contractor shall verify that there are no sharp objects that may rupture the impermeable liner prior to installation. The impermeable liner shall be installed in between the leveling course and open-graded stone base.

(E) The impermeable liner will be sized, cut and installed in accordance with the approved shop drawings and specifications. The impermeable liner will cover the entire footprint of which concrete is intended to be poured.

(F) The impermeable liner will cover the inner walls of the concrete header as well as the back side of the curb. The contractor is to ensure that cast-in-place concrete does not penetrate or bypass the impermeable liner.

(G) Excess liner trim will be cut flushed to the cast-in-place concrete surface.

GI-2.08L.5 MEASUREMENT

The quantity of Impermeable Liner to be measured for payment shall be the number of square feet of liner installed at the site to the satisfaction of the Engineer. Measurement shall be made to the nearest square foot installed at each green infrastructure practice facility.

GI-2.08L.6 PRICE TO COVER

The contract price for IMPERMEABLE LINER shall be a unit price bid per SQUARE FOOT and shall cover the cost of all labor, material, equipment, insurance, and incidentals necessary to furnish, handle, store, and install Impermeable Liner sheets, including, but not limited to, sheeting and bracing, cutting holes in the sheets for utilities, furnishing and installing stainless steel anchor bars and fastenings at the top of the sheet and caulking bead along the top seam of the impermeable liner and the concrete element; all in accordance with the Contract Drawings, the specifications and the directions of the Engineer.

Payment will be made under:

Item No.	Item	Pay Unit
GI-2.08L	IMPERMEABLE LINER	S.F.

SECTION GI-2.09 DR
GEOTEXTILE FABRIC FOR DRAINAGE

GI-2.09DR.1 INTENT

This section describes geotextile fabric. The Contractor shall furnish and install woven geotextile - drainage fabric as specified herein in accordance with the NYC Department of Environmental Protection Standard Design and Guidelines for Green Infrastructure Practices drawings and as directed by the Engineer.

GI-2.09DR.2 SUBMITTALS

(A) All submittals shall be submitted prior to purchase and shall be made in accordance with the requirements of the NYC Department of Transportation Standard Highway Specifications, General Conditions, Subsection 1.06.31.

(B) Samples: The Contractor shall furnish two (2) labeled samples of the geotextiles intended for use in the work for approval and the Engineer's use. The label shall include the manufacturer's product name, the type of fabric, and the weight of grade of the material. Geotextiles used in the work shall conform to the approved samples.

GI-2.09DR.3 MATERIALS

(A) Chemical and Physical Requirements

(1) Drainage application is defined as a soil to geotextile system that allows for long-term, adequate liquid flow normal to the geotextile with limited soil loss across the plane of the geotextile.

(2) Minimum Average Roll Value (MARV): Property value calculated as typical minus two standard deviations. Statistically, it yields a 97.7 percent degree of confidence that any sample taken during quality assurance testing will exceed value reported. Typical Roll Value is represented by (TRV).

(3) Fibers used in the manufacture of drainage geotextiles, and super high-tenacity polypropylene yarns with a weave pattern to maximize strength, water flow, soil interaction and soil retention. The yarns used shall consist of long-chain, synthetic polymers, composed of at least 95 percent by weight polyolefins, polyesters, or polyamides. They shall be formed into a stable network such that the filaments or yarns retain their dimensional stability relative to each other, including selvages. The geotextile shall have no tears or defects which adversely alter its physical properties. Geotextiles used in drainage applications shall conform to the following properties for Woven Geotextile Drainage:

Property	ASTM Test	Requirements
Structure Flow Rate (Min. @ MARV)	ASTM D4491	Woven 2852 1/min/sm (70 gal/min/sf)
Tensile Strength @ 2% (Min.)	ASTM D4595	8.8 kN/m (600 LBS/ft)
Tensile @ 5% Strength (Min.)	ASTM D4595	23.6 kN/m (1620 LBS/ft)
Interaction Coefficient (Min.)	ASTM D4833	0.89
Permittivity (Min.)	ASTM D6706	0.9 /sec
Apparent Opening Size (Max.)	ASTM D4751	0.425 mm (0.0167 inch) Std. No. 40

(B) Brand

Geotextiles shall be as manufactured by Terrafix, Inc., Toronto, ON; by Carthage Mills, Cincinnati, OH; by Mirafi, Inc., Charlotte, NC; or approved equivalent.

(C) Submittals

(1) All submittals shall be submitted for review and approval prior to purchase.

(2) Samples: The Contractor shall furnish two (2) labeled samples of the geotextiles intended for use in the work for approval and the Engineer's use. The label shall include the manufacturer's product name, the type of fabric, and the weight of grade of the material chemical composition. Geotextiles used in the work shall conform to the approved samples.

(3) Certified laboratory test results meeting or exceeding the below criteria shall be supplied with the submittal information.

GI-2.09DR.4 CONSTRUCTION METHODS

(A) Each geotextile roll shall be wrapped with an overlaying material that will protect the geotextile, including the ends of the roll, from damage due to shipment, water, sunlight, and contaminants. The protective wrapping shall be maintained during periods of shipment and storage. During storage, geotextile rolls shall be elevated off the ground and adequately covered to protect them from the following: site construction damage, precipitation, extended ultraviolet radiation including sunlight, chemicals that are strong acids or strong bases, and any environmental condition that may damage the physical property values of the geotextile.

(B) The Contractor shall be required to do a full depth saw cut of the roadway pavement as required to install PRECAST CONCRETE PERMEABLE PAVER or PRECAST POROUS CONCRETE PANELS within the gutter, as shown on the Contract Drawings. Excavation shall be made to dimensions sufficient to accommodate placement of the geo-textile, broken stone reservoir course material, geo-grid and pavement (leveling course with porous panels or permeable pavers). The overcut underlying soil shall be removed from the excavation and the bottom shall be compacted as required. The extra depth will be filled with broken stone materials as required after installation of geo-textile. No additional payment will be made for extra broken stone used to compensate for overcut subbase. If applicable, Temporary Support should be provided for trench walls to prevent it collapse. The contractor shall protect the pavement section at the saw cut line along the road side.

(C) PRECAST CONCRETE PERMEABLE PAVER or PRECAST POROUS CONCRETE PANELS: Prior to installation of geotextile, the ground shall be prepared by removing stumps and other organic material, along with any large boulders and sharp objects which may tear or damage the fabric. Install geotextile at elevations and alignments as indicated on the drawings or as directed by the Engineer. The drainage geotextile shall be placed loosely with no wrinkles or folds. Overlap geotextile edges a minimum of 12 inches in the direction of drainage flow. Care will be taken to place the geotextile in intimate contact with the soil so that no void spaces occur between the geotextile and trench or ground. If the geotextile is damaged during installation, the rupture shall be removed and the damaged area shall be covered with a patch of new fabric which will overlap the undamaged fabric with twelve (12") inches in all directions. The Contractor shall make such repair work as directed by Engineer at no extra cost to the City.

(D) GABION [WITH CLEAN OPEN GRADED STONE]: The geotextile fabric shall be placed on the side where the gabion abuts both the existing soil under the roadway and the engineered soil and sand and open graded stone base; and on the top side of the gabion; the bottom of the gabion shall have no geotextile drainage fabric. Prior to placement of the geotextile fabric, the area shall be free of stumps and other organic material, along with any large boulders or sharp objects which may tear or damage the fabric. The drainage geotextile shall be placed loosely with no wrinkles or folds. Overlap geotextile edges a minimum of 12 inches in the direction of drainage flow. If the geotextile is damaged during installation, the rupture shall be removed and the damaged area shall be covered with a patch of new fabric which will overlap the undamaged fabric with twelve (12") inches in all directions. The Contractor shall make such repair work as directed by Engineer at no extra cost to the City.

(E) OPEN GRADED STONE BASE: The geotextile fabric shall be placed on the sides of the open graded stone base, where it abuts either existing soil under the roadway or sidewalk and at the top of the open graded stone base where it abuts the engineered soil and sand. Prior to placement of the geotextile fabric, the area shall be free of stumps and other organic material, along with any large boulders or sharp objects which may tear or damage the fabric. The drainage geotextile shall be placed loosely with no wrinkles or folds. Overlap geotextile edges a minimum of 12 inches in the direction of drainage flow. Care will be taken to place the geotextile in intimate contact with the soil so that no void spaces occur between the geotextile and trench or ground. If the geotextile is damaged during installation, the rupture shall be removed and the damaged area shall be covered with a patch of new fabric which will overlap the undamaged fabric with twelve (12") inches in all directions. The Contractor shall make such repair work as directed by Engineer at no extra cost to the City.

Overlaying material shall be placed within the same work shift whether the fabric is subject to damage from sunlight or not.

GI-2.09DR.5 MEASUREMENT

The quantity of GEOTEXTILE FABRIC to be measured for payment shall be the number of SQUARE YARDS actually installed at the site, in its final position, to the satisfaction of the Engineer. No quantity will be included for material used for repair of tears or for material used to provide the overlaps.

GI-2.09DR.6 PRICE TO COVER

The unit price bid per SQUARE YARD for GEOTEXTILE FABRIC shall cover the cost of furnishing all labor, material, equipment, insurance, submittals, and incidental expenses required to complete the work; all in accordance with the Contract Drawings, the specifications and directions of the Engineer.

Payment for the following will be made under other contract items: excavation (6.02 AAN – UNCLASSIFIED EXCAVATION), full depth saw cut (GI-5.21R and GI-5.21S), Open Graded Stone Base (GI-2.07A to GI-2.07C), Gabion with Open Graded Stone (GI 2.17A) and backfill (4.11 CA – FILL, PLACE MEASUREMENT).

Payment will be made under:

Item No.	Item	Pay Unit
GI-2.09 DR	GEOTEXTILE FABRIC FOR DRAINAGE	S.Y.

SECTION GI-2.10PC
STEEL TREE GUARDS (POWDER COATED)

GI-2.10PC.1. INTENT

This section describes steel tree guards (powder coated). The Contractor shall furnish and install Steel Tree Guards (Powder Coated) in accordance with the NYC Department of Environmental Protection Standard Design and Guidelines for Green Infrastructure Practices drawings and as directed by the Engineer.

GI-2.10PC.2. MATERIALS

Steel tree guards (powder coated) shall conform to Specifications C1015 of the American Iron and Steel Institute (AISI) and shall be of solid steel and not hollow in section.

Concrete shall Type B-32 comply with the requirements of Sections 3.05 and 4.06 in the NYC Department of Transportation Standard Highway Specifications.

GI-2.10PC.3. SUBMITTALS

(A) The Contractor shall submit for the approval of the Engineer finished samples of parts of the steel tree guards (powder coated). The workmanship and finish of the final product shall be equal to the approved samples. Also, the Contractor shall submit detailed shop drawings of steel tree guards (powder coated) for the approval of the Engineer.

(B) All surfaces of the steel tree pit guard bars, posts, and rails shall be powder coated with an electrostatically sprayed, lead-free, TGIC (triglycidyl isocynanurate) polyester powder coating applied to a minimum of 3 to 4 mils by electrostatic spray process and bake finished per the manufacturer's directions. Powder coating shall be applied to the thermal zinc or iron phosphate coated metal in such a manner that the coating will not peel off. The manufacturer shall perform all processes required to achieve a smooth material bond. Insure surfaces to be coated are clean and dry and free of grease, dust, rust, etc. All surfaces shall first receive phosphating and chromatizing treatments to improve the adhesion of the surface coating.

Colors shall be "black" unless otherwise shown on the drawings. Material surfaces shall be protected during shipment so as to arrive mar and scratch free in the field.

GI-2.10PC.4. CHEMICAL AND PHYSICAL REQUIREMENTS

Steel Tree Guards (Powder Coated) shall be constructed of bars, posts, and rails of the sizes shown on the plans. All material shall conform to Specifications C1015 of the AISI

The TGIC polyester powder coating shall be similar to Secural by Spraylat, Tiger Dry lac Series 49 as manufactured by Tiger Drylac U.S.A., Reading, PA, or approved equal and shall comply with ASTM standards as follows:

PHYSICAL PROPERTIES	TEST METHODS	ACCEPTANCE CRITERIA
Adhesion cross hatching	D-3359B	5B (0% area removed)
Flexibility conical mandrel	D-522	Pass 3/8" mandrel
Pencil hardness	D-3363	Pencil hardness 2H minimum
Impact resistance	D-2794	140 inch pounds minimum
Overbake resistance- Adhesion	D-2454	5B
Overbake resistance- Hardness	D-2454	Pencil hardness 2H minimum
Overbake resistance-Direct Impact	D-2454	140 inch pounds minimum
Humidity resistance-250 hours	D-4585	No visible change to surface
Weatherability	D-822	No visible change to surface

GI-2.10PC.5. MATERIALS

(A) All material for the steel tree guards (powder coated) shall conform to Specifications C1015 of the AISI.

GI-2.10PC.6. CONSTRUCTION METHODS

(A) Steel Tree Guards (Powder Coated) shall be fabricated in strict accordance with the plans and approved shop drawings. Posts, pickets, bars, and rails shall be formed into panels of the shapes shown on the Contract Drawings. Joints shall be completely welded with welds of proper size and shape. All welds shall be ground smooth to a neat finish. Connections shall be provided as indicated on the plans. Welding shall conform to current industry requirements for this type of application.

(B) Steel spike shall be concrete encased as shown on the plans or as per Standard Design and Guidelines for Green Infrastructure Practices

(C) Posts and pickets shall, in all cases, be truly vertical as shown on the plans. Rails and bars shall be parallel to grade as shown on the Contract Drawings. Panels shall be curved as required by the work. Dimensions of individual steel tree guards (powder coated) may vary as required by existing site conditions, in accordance with the directions of the Engineer.

(D) The powder coating shall be applied without voids, tears or cuts that reveal the substrate and shall thoroughly adhere to the metal without peeling when scratched with a pick device or knife blade point. All visible nuts, washers, and ends of all bolts shall be painted with touch-up paint as described below.

Touch-up and Repair: For minor damage caused by installation or transportation, touch-up finish in conformance with manufacturer's recommendations. Provide touch-up such that repair is not visible from a distance of six (6') feet.

Laboratory Test for TGIC-Polyester Powder coat: At the discretion of the Engineer, a sample TGICPolyester powder coated metal bar may be laboratory tested for bonding of the powder coating to the metal. Test shall be the Cross Hatch test per ASTM D3359, method B. Failure to satisfactorily pass this test shall be a basis for rejection

(E) The steel tree guards (powder coated) shall be erected in soil only, inside the tree pits. The posts shall be set in place and properly supported to hold them to line and grade. The lowest portion of the steel band at the bottom of all side rails set 1" above the finished grade of the sidewalk. Any guards not set plumb and true to line and grade shall be removed and replaced at the Contractor's expense.

GI-2.10PC.7. MEASUREMENT

The quantity of each type of STEEL TREE GUARD (POWDER COATED) to be measured for payment shall be the number of LINEAR FEET of tree pit guards erected, complete, in place to the satisfaction of the Engineer, measured along the top rail.

GI-2.10PC.8. PRICES TO COVER

The unit price bid per LINEAR FOOT of each type of STEEL TREE GUARD (POWDER COATED) shall cover the cost of all labor, material, equipment, insurance, and incidentals required to fabricate, furnish and erect tree pit guards including, but not limited to, welding and painting, furnishing, placing and trimming the 6" diameter tube forms, and furnishing and placing concrete for encasement of the steel tree pit guard spikes; all in accordance with the Contract Drawings, the specifications and as directed by the Engineer.

Payment will be made under:

Item No.	Item	Pay Unit
GI-2.10PC - A	STEEL TREE PIT GUARD - POWDER COATED – TYPE 'A'	L.F.
GI-2.10PC - B	STEEL TREE PIT GUARD - POWDER COATED – TYPE 'B'	L.F.
GI-2.10PC - C	STEEL TREE PIT GUARD - POWDER COATED – TYPE 'C'	L.F.
GI-2.10PC - D	STEEL TREE PIT GUARD - POWDER COATED – TYPE 'D'	L.F.

SECTION GI-2.13A
ENGINEERED SOIL AND SAND

GI-2.13A.1 INTENT

This section describes Engineered Soil and Sand. The Contractor shall furnish, amend (if required), place and prepare the Engineered Soil and Sand for seeding and/or plant material as specified herein in accordance with the NYC Department of Environmental Protection Standard Design and Guidelines for Green Infrastructure Practices drawings and as directed by the Engineer.

GI-2.13A.2 MATERIALS

Engineered Soil and Sand shall conform to the following standards:

(A) Recommended Soil Testing Procedures for The Northeastern United States, 3rd Edition, Northeast Regional Publication, Agricultural Experiment Station, University of Delaware. Bulletin #493, Revised July 2011 or latest.

(B) USDA Soil Survey Laboratory Methods Manual, Soil Survey Investigations Report No. 42 Version 5.0, Issued 2014.

GI-2.13A.3 SUBMITTALS

(A) Prior to the procurement of Engineered Soil and Sand, the following information and samples are required for review and approval for each source:

(1) Proposed material source and vendor.

(2) A sample of the proposed material, taken with a representative of the Department, indicating the method of sampling and location of the sample.

(3) The Contractor shall submit to the Engineer the name and location of the borrow (source) or stockpile site(s) and the estimated quantity of material available. The Contractor shall provide a notarized letter from the owner(s) of the proposed borrow site and/or stockpile site(s) indicating ownership of the proposed site(s) and a commitment to supply a specified minimum quantity of material for this project. Additionally, the supplier shall provide a certificate of clean fill and/or source materials for topsoil, signed by a NYS licensed PE/RLA or RA. To avoid delays in planting and seeding, the Contractor shall immediately begin to secure and test Engineered Soil and Sand at least one month in advance of the material actually being needed on site. This will allow sufficient time to blend the specified soil mix and make all the necessary adjustments in the mixing process.

(4) Results of the organic content analyses conducted in accordance with the above referenced standard, *Recommended Soil Testing Procedures for The Northeastern United States, 3rd Edition, Northeast Regional Publication, Agricultural Experiment Station, University of Delaware. Bulletin #493, Revised July 2011* or latest.

(5) Results of the USCS soil texture gradation (gravel, sand, silt and clay) analyses and sand sieve analyses, with full reporting of all information in AASHTO sieve sizes, in accordance with the *AASHTO T 27 Sieve Analysis of Fine and Coarse Aggregates and ASTM D2487 Standard Practice for Classification of Soils for Engineering Purposes (Unified Soil Classification System)*

(6) Results of the pH tests conducted in accordance with the above referenced standard, *USDA Soil Survey Laboratory Methods Manual, Soil Survey Investigations Report No. 42 Version 5.0 Issued 2014.*

(7) Results of the soluble salts test conducted in accordance with the above referenced standard, *Recommended Soil Testing Procedures for The Northeastern United States, 3rd Edition, Northeast Regional Publication, Agricultural Experiment Station, University of Delaware. Bulletin #493, Revised July 2011* or latest.

(8) Results of the Nutrient analyses test conducted in accordance with the above referenced standard, *Recommended Soil Testing Procedures for The Northeastern United States, 3rd Edition, Northeast Regional Publication, Agricultural Experiment Station, University of Delaware. Bulletin #493, Revised July 2011* or latest.

(9) Results of the Inorganic nitrogen and total Kjeldahl nitrogen tests conducted in accordance with the above referenced standard, *USDA Soil Survey Laboratory Methods Manual, Soil Survey Investigations Report No. 42 Version 5.0, Issued 2014.*

(10) Results of the acid-producing (iron sulfide) test conducted in accordance with the methodologies utilized by the *USDA Soil Survey Laboratory Methods Manual, Soil Survey Investigations Report No. 42 Version 5.0, Issued 2014.*

NOTE: Due to the agricultural nature of some of the Quality Control testing the Contractor is notified that both Rutgers University and Cornell University can perform nearly all agricultural testing required, one exception may be the acid-producing test. Turn around times for results may vary from standard soils testing. However, all agricultural testing procedures must be performed in accordance with the above referenced standards and the *USDA Soil Survey Laboratory Methods Manual (No. 42, 2014) AASHTO T 27 Sieve Analysis of Fine and Coarse Aggregates and the Recommended Soil Testing Procedures for The Northeastern United States, 3rd Edition, Northeast Regio*

nal Publication, Agricultural Experiment Station, University of Delaware. Bulletin #493, Revised July 2011 or latest. If another lab is proposed, the Contractor can submit written certification from the proposed lab certifying that the lab will utilize the same methodologies for soil testing as outlined in these specifications. Approval of the laboratory for Contractor's Quality Control testing will be by the Engineer.

(B) As delivery of Engineered Soil and Sand to the site progresses, the following additional testing shall be conducted by the Contractor on the Engineered Soil and Sand brought to the site. Frequency of testing is one for every 50 CY delivered. Results of tests shall be submitted to Engineer for review and approval.

(1) Organic Content Testing in accordance with the *Recommended Soil Testing Procedures for The Northeastern United States, 3rd Edition, Northeast Regional Publication, Agricultural Experiment Station, University of Delaware. Bulletin #493, Revised July 2011* or latest.

(2) pH testing in accordance with the *USDA Soil Survey Laboratory Methods Manual, Soil Survey Investigations Report No. 42 Version 5.0, Issued 2014.*

(3) Soluble Salts testing in accordance with the *Recommended Soil Testing Procedures for The Northeastern United States, 3rd Edition, Northeast Regional Publication, Agricultural Experiment Station, University of Delaware, Bulletin #493, Revised July 2011* or latest.

(4) Results of the Nutrient analyses test conducted in accordance with the *Recommended Soil Testing Procedures for The Northeastern United States, 3rd Edition, Northeast Regional Publication, Agricultural Experiment Station, University of Delaware, Bulletin #493, Revised July 2011* or latest.

(5) Results of the Inorganic nitrogen and total Kjeldahl nitrogen tests conducted in accordance with the *USDA Soil Survey Laboratory Methods Manual, Soil Survey Investigations Report No. 42 Version 5.0, Issued 2014.*

(6) Results of the USCS soil texture gradation (gravel, sand, silt and clay) analyses and sand sieve analyses, with full reporting of all information in AASHTO sieve sizes, in accordance with the *AASHTO T 27 Sieve Analysis of Fine and Coarse Aggregates and ASTM D2487 Standard Practice for Classification of Soils for Engineering Purposes (Unified Soil Classification System).*

(7) Results of the acid-producing (iron sulfide) test conducted in accordance with the methodologies utilized by the *USDA Soil Survey Laboratory Methods Manual, Soil Survey Investigations Report No. 42 Version 5.0, Issued 2014.*

(C) The Contractor shall submit to Engineer the materials and procedures for amending soil, if appropriate. Amendment of soil is only permitted to meet the nutrient and organic requirements of the specifications. Nutrient modifications are only permitted through the use of the approved contract specified organic fertilizer and the organic amendment permitted is leaf compost, no other organic amendment is permitted.

(D) The Contractor shall submit quantity records on a weekly basis to Engineer.

(E) Material failing the frequency testing shall not be incorporated into the work and shall be removed from the site at the Contractor expense.

GI-2.13A.4 CHEMICAL AND PHYSICAL REQUIREMENTS

(A) Engineered Soil and Sand is an integral part of the Green Infrastructure System; as such, certification of its material properties is subject to the testing protocols of the Contractor's Quality Control (QC) plan and quality assurance testing by New York City Department of Design and Construction's Quality Assurance and Construction Safety (QACS) Bureau. The QC requirements relative to Engineered Soil and Sand are detailed below. **The Contractor shall strictly comply with all requirements of its QC plan.** Sufficient lead time is required to develop an appropriate plan for mixing methodologies and ratios that will provide reliable results to meet the parameters listed below.

(B) Engineered Soil and Sand shall be predominately sand (80-85% sand) as classified by the Unified Soil Classification System (USCS). Based on test results, a determination will be made to ensure that the sand fraction analysis results are capable of supporting proposed vegetation. Engineered Soil and Sand shall be free of refuse, hard clods, woody vegetation, stiff clay, construction debris (of any kind), boulders, stones larger than 1-1/2 inches, chemicals, or other deleterious material toxic to any vegetation used on this project.

(C) Engineered Soil and Sand shall have a minimum organic content of 3.0 percent and a maximum of 6.0 percent. If the source soil requires amendment to meet the Engineered Soil and Sand

organic content requirement, leaf compost will be the only approved admixture. No soil mixing shall be permitted during or after Engineered Soil and Sand placement. Engineered Soil and Sand shall be tested for compliance with Contract specifications and submitted for approval prior to delivery to the site.

(D) The organic content of soils shall be determined by a laboratory using the loss on ignition method as described in the *Recommended Soil Testing Procedures for The Northeastern United States, 3rd Edition, Northeast Regional Publication, Agricultural Experiment Station, University of Delaware. Bulletin #493, Revised July 2011* or latest.

(E) The gradation of Engineered Soil and Sand shall be determined by a laboratory using the methods of the *ASTM D2487 Standard Practice for Classification of Soils for Engineering Purposes (Unified Soil Classification System).* The gradation of the Engineered Soil and Sand as determined by USCS classifications shall be within the following ranges:

	Ranges:	0-08% gravel
80-85% sand *of which:*		0-05% coarse sand
		55-75% medium sand
		20-40% fine sand
		5-10% silt
		3-8% clay

Classification/sieve size:	75mm to 4.75 mm gravel
	4.75 mm to 0.075 mm sand
	0.075 mm to 0.002 mmsilt
	0.002 mm to 0.001 mmclay

In addition to the above gradation the Contractor shall provide the percentage of particle sizes corresponding to U.S.D.A. classifications:

Coarse gravel	(75 mm to 19 mm)
Fine gravel	(19 mm to 4.75 mm)
Coarse sand	(4.75 mm to 2.00 mm)
Medium sand	(2.00 mm to 0.425 mm)
Fine sand	(0.425 mm to 0.075 mm)

(F) The pH value of Engineered Soil and Sand shall be 5-7.0 as determined by an approved laboratory using soil pH (Water (1:1. V:V)) procedures as described in the *USDA Soil Survey Laboratory Methods Manual, Soil Survey Investigations Report No. 42 Version 5.0, Issued 2014.* Amendment of soil to lower pH to meet Contract requirements is not permitted.

(G) The soluble salt value of the Engineered Soil and Sand shall be (0-.4mmhos cm-1) as determined by an approved laboratory using the soluble salt (1:2(V:V)) procedures as described in the *Recommended Soil Testing Procedures for The Northeastern United States, 3rd Edition, Northeast Regional Publication, Agricultural Experiment Station, University of Delaware, Bulletin #493, Revised July 2011* or latest.

(H) The value for Kjeldahl Nitrogen shall be as outlined below as determined by an approved laboratory using the *USDA Soil Survey Laboratory Methods Manual, Soil Survey Investigations Report No. 42 Version 5.0, Issued 2014.*

Kjeldahl N Acceptable range is 0.06% to 0.25% (with nitrate (NO-3) form of nitrogen not to exceed 20 ppm).

(I) The value for Macro (P, K) Nutrients shall be determined by an approved laboratory using the procedures as described in the *Recommended Soil Testing Procedures for The Northeastern United States, 3rd Edition, Northeast Regional Publication, Agricultural Experiment Station, University of Delaware, Bulletin #493, Revised July 2011* or latest. Ideal values for macro nutrients shall fall within the ranges indicated below:

P	80 lbs/acre to 100 lbs/acre
K	100 lbs/acre to 300 lbs/acre

The value for Micro Nutrients (Mg, Ca, Mn, Zn, Cu and B) shall be determined by an approved laboratory using the procedures as described in the *Recommended Soil Testing Procedures for The Northeastern United States, 3rd Edition, Northeast Regional Publication, Agricultural Experiment Station, University of Delaware, Bulletin #493, Revised July 2011* or latest. Micro Nutrient values and the determination of their compliance with accepted industry standards shall fall on the discretion of the Engineer. Test reports for Micro Nutrients shall be approved in writing by the Engineer prior to delivery of any soil to the work site.

(J) An acid-producing soil test is required to determine the potential for decreases in soil pH after oxidation. The pH value of the solution shall be greater than 4.5 as determined by the *USDA Soil Survey Laboratory Methods Manual, Soil Survey Investigations Report No. 42 Version 5.0, Issued 2014.*

(K) The Engineered Soil and Sand mix shall not contain any traces of hydrocarbons, petroleum products, chemically prohibited substances or any other elements considered to be toxic to any vegetation used on this Project. It shall not smell of petroleum or give off other unnatural or toxic odors The Engineer shall check for discoloration and evidence of unacceptable contents. Regardless of prior acceptance of sample material should the Engineered Soil and Sand delivered to the site seem suspicious in any way; the Engineer shall reject the material.

If the Engineer suspects that the installed Engineered Soil and Sand possesses hazardous or contaminated characteristics, it will be rejected.

The NYSDEC Guidance Values are known as "Recommended Soil Cleanup Objectives" or "Appendix A" (Revised 1/24/94), and consist of Table 1 for V.O.C.'s, Table 2 for Semi-V.O.C.s, Table 3 for Organic Pesticides/Herbicides and P.C.B.'s, and Table 4 for Heavy Metal. Final values shall be determined by either a health-based level, or a concentration necessary to protect groundwater quality, whichever is lower. If the Engineered Soil and Sand has already been placed in-situ, the Contractor shall be responsible for:

(1) Removal and legal disposal of unacceptable fill;

(2) Replacement with acceptable fill; and,

(3) All other expenses, as well as potential fines that may be incurred.

(L) SAND shall consist of sand, free of organic material, loam, debris, frozen soil or other deleterious material which may be compressible. The sand shall be of uniform quality, friable, free from hard clods, stiff clay, hard pan, partially disintegrated stone, stones, lime, cement, ashes, slag, concrete, tar residues, tarred paper, gasoline, motor oil, or other petroleum hydrocarbons, boards, brush, weeds, stalks, roots, sods, chips, sticks or any other undesirable material. Invasive, nonnative seed shall not be allowed in the clean sand material.

Clean sand should conform to the following gradation requirements:
U.S. Standard Sieve Size No. 8, with Percent Passing by Weight: 100%

GI-2.13A.5 MEASUREMENT

The quantity of Engineered Soil and Sand to be measured for payment under this item shall be the number of cubic yards of Engineered Soil and Sand actually incorporated in the finished work, measured in trucks used for delivery at the proposed site(s), in accordance with the plans and specifications, and to the satisfaction of the Engineer.

GI-2.13A.6 PRICE TO COVER

Payment per cubic yard of Engineered Soil and Sand shall cover the cost of all labor, materials, plant, equipment, insurance, and incidentals required to furnish and incorporate the Engineered Soil and Sand in full compliance with the requirements of the specifications and shall include, but not limited to, testing of materials and furnishing such samples for testing as may be required, all in accordance with the plans, the specifications, and directions of the Engineer.

Payment will be made under:

Item No.	Item	Pay Unit
GI-2.13A	ENGINEERED SAND AND SOIL	C.Y.

SECTION GI-2.16
HIGH DENSITY POLYETHYLENE (HDPE)

GI-2.16.1 INTENT

This section describes High Density Polyethylene (HDPE) pipe, fittings, flanges, unions, couplings, as specified in the NYC Department of Environmental Protection Standard Design and Guidelines for Green Infrastructure Practices drawings, or as required for a complete installation. Furnish and install all HDPE pipe and fittings in accordance with the specifications, the manufacturers' recommendations, and approved shop drawings.

GI-2.16.2 REFERENCES

(A) HDPE pipe shall conform to the latest standards of the American National Standards Institute (ANSI), the American Society for Testing and Materials (ASTM), the American Water Works Association (AWWA) and the National Sanitation Foundation (NSF).

(B) HDPE pipe and fittings shall conform to the following ASTM and AASHTO standards:

(1) ASTM D3212 - Standard Specification for Joints for Drain and Sewer Plastic Pipes Using Flexible Elastomeric Seals

(2) ASTM D3350 - Standard Specification for Polyethylene Plastics Pipe and Fittings Materials

(3) AASHTO M 252 - Standard Specification for Corrugated Polyethylene Drainage Pipe

(4) ASTM D1248 - Standard Specification for Polyethylene Plastics Extrusion Materials for Wire and Cable

(5) ASTM D7001 - Standard Specification for Geocomposites for Pavement Edge Drains and other High-Flow Applications

(6) ASTM D2321 - Standard Practice for Underground Installation of Thermoplastic Pipe for Sewers and Other Gravity-Flow Applications

GI-2.16.3 SUBMITTALS

Submit catalog data for pipe, couplings, and other appurtenances.

GI-2.16.4 CHEMICAL AND PHYSICAL REQUIREMENTS

(A) The pipe shall be as uniform as commercially practicable in color, capacity, density, and other physical properties.

(B) The pipe shall be manufactured from high density polyethylene resin in accordance with ASTM D3350 and PPI TR4. The pipe shall conform to cell classification PE 424420C for PE42 under ASTM D 3350. The pipe material shall conform to the following cell classification requirements:

Property	Value	ASTM Test Procedure Designation
Density	0.955 gm/cm^3	D 1505
Melt Flow Index	1.0	D 1238
Flexural Modulus	80,000 psi	D 790
Property	**Value**	**ASTM Test Procedure Designation**
Tensile Strength @ Yield	3,200 psi	D 638
ESCR	Max Failure = 50%	D1693
Hydraulic Design Basis	Not Pressure Rated	D 2837
UV Stabilizer	C, Black with 2-3% carbon black	D 3350

(C) The pipe shall contain no recycled materials or compounds.

(D) HDPE pipe shall be marked either continuously or on intervals not to exceed five (5) feet by indirect printing with the following information:

(1) Name and/or trademark of the manufacturer.

(2) Nominal pipe size.

(3) Dimension Ratio (DR).

(4) The letters PE followed by the polyethylene grade per ASTM D 1248, followed by the Hydrostatic Design Basis.

(5) Manufacturing Standard Reference.

(6) Production Code from which time and date of manufacture can be determined.

(E) Visible defects, such as cracks, creases, crazing, non-uniformly pigmented areas or undispersed raw materials shall not be acceptable and will result in rejection of the pipe by the Engineer.

(F) HDPE fittings shall be manufactured to the requirements of ASTM D 3212 and this Specification. Fabricated fittings shall be pressure rated to match the system piping.

GI-2.16.5 MANUFACTURERS

(A) Advanced Drainage Systems, Inc. (ADS)
4640 Trueman Blvd. Hilliard, OH 43026
1-800-821-6710
http://www.ads-pipe.com

(B) Hancor, Inc.
12370 Jacksontown Rd. #172
Findlay, OH 45840
1-888-367-7473
http://www.hancor.com

(C) LANE Enterprises, Inc.
3905 Hartzdale Drive, Suite 514
Camp Hill, PA 17011
717-761-8175
www.lane-enterprises.com

(D) Other manufacturers of equivalent products may be submitted for approval.

GI-2.16.6 CONSTRUCTION METHODS

(A) Utilize care when lowering unit into the trench. Handle using nylon slings and two pick points.

(B) When the unit consists of two sections, place the downstream section first. Properly lube the bell and spigot to connect and home the remaining section.

(C) All connections to stormwater manholes, stormwater inlets, junctions, and/or inlets should be grouted and water/soil tight.

(D) Only use couplings to join standard lengths of pipe and as required to complete a straight run of pipe. Do not use couplings to join random lengths of pipe and cuttings from standard lengths.

(E) Use reducing fittings for all changes in pipe size. Do not use bushings.

(F) During construction, keep the lines free from foreign matter. The piping shall be left thoroughly clean to the satisfaction of the Engineer.

GI-2.16.7 MEASUREMENT

The quantities to be measured for payment under these Items shall be the number of linear feet (installed length) of each type HDPE PIPE actually placed in their final position, to the satisfaction of the Engineer, measured horizontally or vertically along the centerline of pipe and fittings as installed.

GI-2.16.8 PRICES TO COVER

The price bid for each type of HDPE PIPE shall be a unit price per linear foot and shall cover the cost of all labor, materials, equipment, insurance, and incidentals necessary to complete the work of furnishing and installing HDPE Pipe, including, but not limited to, furnishing and installing fittings, flanges, unions, couplings, end caps, sand, and cleanouts, and connecting and joining pipe to other pipes or drainage structures; and furnishing and wrapping geotextile around perforated slotted HDPE pipe; all in accordance with the Contract Drawings, the specifications and directions of the Engineer.

Payment will be made under:

Item No.	Item	Pay Unit
GI-2.16S	SOLID HDPE PIPE (6" DIA.)	L.F.
GI-2.16P	PERFORATED HDPE PIPE (6" DIA.)	L.F.
GI-2.16 E	PERFORATED COVER (4" DIA.)	L.F.
GI-2.16 FPA	FULL PERFORATED HDPE PIPE (8" DIA.)	L.F.
GI-2.16 HPA	HALF-PERFORATED HDPE PIPE (8" DIA.)	L.F.
GI-2.16 SA	SOLID HDPE PIPE (8" DIA.)	L.F.

SECTION GI-2.16A
(NOT A PAY ITEM)
PVC PIPE

GI-2.16A.1 INTENT

This section describes Polyvinyl Chloride (PVC) pipe, fittings, flanges, unions, couplings, as specified in these NYC Department of Environmental Protection Standard Design and Guidelines for Green Infrastructure Practices drawings, or as required for a complete installation. Furnish and install all PVC pipe and fittings in accordance with the specifications, the manufacturers' recommendations, and approved shop drawings.

GI-2.16A.2 REFERENCES

(A) PVC pipe shall conform to the latest standards of the American National Standards Institute (ANSI), the American Society for Testing and Materials (ASTM), the American Water Works Association (AWWA) and the National Sanitation Foundation (NSF).

(B) PVC pipe, gasket, and fittings shall conform to the following ASTM and AASHTO standards:

(1) ASTM D3034 - Standard Specification for Type PSM Poly(Vinyl Chloride) (PVC) Sewer Pipe and Fittings

(2) ASTM D1784 - Standard Specification for Rigid PVC Compounds and CPVC Compounds

(3) ASTM D2412 - Standard Test Method for Determination of External Loading Characteristics of Plastic Pipe by Parallel – Plate Loading

(4) ASTM D3212 - Standard Specification for Joints for Drain and Sewer Plastic Pipes Using Flexible Elastomeric Seals

(5) ASTM D2321 - Standard Practice for Underground Installation of Thermoplastic Pipe for Sewers and Other Gravity-Flow Applications

(6) ASTM D2152 - Standard Test Method for Adequacy of Fusion of Extruded PVC Pipe and Molded Fittings by Acetone Immersion

GI-2.16A.3 SUBMITTALS

Submit catalog data for pipe, couplings, and other appurtenances.

GI-2.16A.4 CHEMICAL AND PHYSICAL REQUIREMENTS

(A) The pipe shall be as uniform as commercially practicable in color, capacity, density and other physical properties.

(B) The pipe shall be manufactured from high density polyvinyl chloride in accordance with ASTM D1784. The pipe shall conform to cell classification 12354 under ASTM D1784. Pipes that conform to a different cell classification because one or more properties are superior to those of the specified classification are also acceptable. The pipe material shall conform to the following cell classification requirements:

Property	Value	ASTM Test Procedure Designation
Base Resin	PVC homopolymer	D 4216
Notched Izod	0.65 ft-lb/in	D 256
Tensile Strength	5,000 psi	D 638
Tensile Modulus	400,000 psi	D 638
DTUL @ 264 psi	154° F	D 648

(C) The pipe shall contain no recycled materials or compounds.

(D) PVC pipe shall be marked either continuously or on intervals not to exceed five (5) feet by indirect printing as specificied in ASTM D1785

(1) Name and/or trademark of the manufacturer.

(2) Nominal pipe size.

(3) Material designation code

(4) Dimension Ratio (DR).

(5) Manufacturing Standard Reference.

(6) Production Code from which time and date of manufacture can be determined.

(E) Visible defects, such as cracks, creases, crazing, non-uniformly pigmented areas or undispersed raw materials shall not be acceptable and will result in rejection of the pipe by the Engineer.

(F) PVC fittings shall be manufactured to the requirements of ASTM D 3212 and this Specification. Fabricated fittings shall be pressure rated to match the system piping.

GI-2.16A.5 MANUFACTURERS

(A) Advanced Drainage Systems, Inc. (ADS)
4640 Trueman Blvd. Hilliard, OH 43026
http://www.ads-pipe.com

(B) Hancor, Inc.
12370 Jacksontown Rd. #172
Findlay, OH 45840
http://www.hancor.com

(C) Royal Municipal Solutions
131 Regalcrest Court
Woodbridge, ONL4L 8P3
http://www.royalbuildingproducts.com/

(D) National Pipe & Plastics, Inc.
3421 Old Vestal Road
Vestal, NY 13850
http://www.nationalpipe.com/

(E) Other manufacturers of equivalent products may be submitted for approval.

GI-2.16A.6 METHODS

(A) Utilize care when lowering unit into the trench. Handle using nylon slings and two pick points.

(B) When the unit consists of two sections, place the downstream section first. Properly lube the bell and spigot to connect and home the remaining section.

(C) Use only couplings to join standard lengths of pipe and as required to complete a straight run of pipe. Do not use couplings to join random lengths of pipe and cuttings from standard lengths.

(D) During construction, keep the lines free from foreign matter. The piping shall be left thoroughly clean to the satisfaction of the Engineer.

GI-2.16A.7 MEASUREMENT AND PAYMENT

No separate payment will be made for this work, the cost of which shall be deemed to be included under all scheduled items.

SECTION GI-2.17A
GABION (WITH CLEAN OPEN GRADED STONE)

GI-2.17A.1 INTENT

This section describes gabions (with clean open graded stone) also described as stone gabions in the NYC Department of Environmental Protection Standard Design and Guidelines for Green Infrastructure Practices drawings. Gabions (with clean open graded stone) shall be installed where required, as specified herein in accordance with the Standard Design and Guidelines for Green Infrastructure Practices drawings and as directed by the Engineer.

GI-2.17A.2 MATERIALS

(F) A gabion is a wire mesh container filled with stone at the project site to form a stable stone basket. The gabion shall have the shape and dimensions as shown on the Contract Drawings and as directed by the Engineer. Wire mesh shall conform to ASTM A975 standards for PVC coated gabions and openings shall be of the necessary size to contain the clean open graded stone.

(G) The wire mesh shall be non-raveling mesh made of twisting continuous pairs of wires to form hexagonal shaped openings which are interconnected to adjacent wires. The wire mesh shall be of sufficient strength to hold the open graded stone in place, and rigid enough to hold the shape as shown on the contract drawings. The wire shall be coated with PVC and shall be free from any cracks or breaks after the fabrication of the mesh. Fasteners used to assemble and interconnect the individual units shall be made of stainless steel.

(H) The clean open graded stones for the gabion shall meet the specifications of GI-2.07 – Clean Open Graded Stone and size range shall be 3" – 4".

GI-2.17A.3 CONSTRUCTION METHODS

(A) Gabions shall be filled with clean open graded stone on site and installed as per the NYC Department of Environmental Protection Standard Design and Guidelines for Green Infrastructure Practices drawings, Contract Drawings, and as directed by the Engineer. The gabions are to be installed at all bioswales except those with Stone Columns or with Stormwater Inlet.

(B) Gabions shall be supplied, as specified, in various lengths and heights. All gabions furnished by a manufacturer shall be uniform width. Dimensions for height, lengths and widths are subject to a tolerance limit of +- 5% of manufacturer's stated sizes.

(C) Gabions shall be fabricated in such a manner that the front, back, sides, ends, lid and diaphragms can be assembled at the construction site into a rectangular basket of the specified sizes. Gabions shall be of single-unit construction. The base, lid, ends, front and back shall be either woven into a single unit or one edge of these members connected to the base section of the gabion in such a manner that strength and flexibility at the point of connection is at least equal to that of the mesh.

(D) The gabion shall be furnished with the necessary diaphragms secured in proper position on the base in such a manner that no additional tying at this juncture will be necessary. All perimeter

edges of the mesh forming the gabion shall be securely selvedge so that the joints formed by tying the selvedges have at least the same strength as the body of the mesh.

GI-2.17A.5 MEASUREMENT

The quantity to be measured for payment shall be the cubic yards of Gabions actually installed at the site filled with clean open graded stone, to the satisfaction of the Engineer.

GI-2.17A.6 PRICE TO COVER

The contract price bid shall be a unit price per CUBIC YARD of GABION (WITH CLEAN OPEN GRADED STONE) and shall cover the cost of all labor, materials, equipment, insurance, and incidentals necessary to complete the work including, but not limited to, furnishing and placing stones within the gabion cage, and tying the gabion lid in place; all in accordance with the Contract Drawings, the specifications and the directions of the Engineer.

Payment for furnishing and wrapping GEOTEXTILE FABRIC FOR DRAINAGE around gabions will be made under Item No. GI-2.09 DR, unless otherwise specified.

Payment will be made under:

Item No.	Item	Pay Unit
GI-2.17A	GABION (WITH CLEAN OPEN GRADED STONE)	C.Y.

SECTION GI-2.19
HDPE STORMWATER CHAMBER

GI-2.19.1. INTENT

This section describes the HDPE STORMWATER CHAMBER. The purpose of the HDPE STORMWATER CHAMBER is to provide increased storm runoff detention capacity in a Right of Way Bioswale.

The Contractor shall furnish and install the HDPE stormwater chamber in accordance with the NYC Department of Environmental Protection Standard Design and Guidelines for Green Infrastructure Practices drawings, specifications, and directions of the Engineer.

GI-2.19.2. MATERIAL

The stormwater chamber shall be manufactured of high molecular weight high density polyethylene in an ISO-9001certified manufacturing facility and meet ASTM D 3350 Cell Class 324420C. Chambers will be manufactured with an open bottom and side walls. If approved by the manufacturer, the units may be trimmed to custom length. The stormwater chamber should conform to the dimensions as shown in the Contract Drawings and the NYC Department of Environmental Protection Standard Design and Guidelines for Green Infrastructure Practices drawings with placement on bedding and backfill as shown. The minimum acceptable storage volume shall be 2 cubic feet per linear foot.

GI-2.19.3. SUBMITTALS

(A) The Contractor, prior to the start of work, shall submit to the Engineer for approval catalog samples and cut sheets of the proposed material including certification that materials meet specified requirements and proposed dimensions of the Contract Drawings Drawings and NYC Department of Environmental Protection Standard Design and Guidelines for Green Infrastructure Practices drawings.

GI-2.19.4. CONSTRUCTION METHODS

(A) Delivery - Deliver materials to site in manufacturer's original, unopened packaging, with labels clearly identifying product name and manufacturer.

(B) Storage - Store materials in clean, dry area in accordance with manufacturer's instructions.

(C) Handling - Protect materials during handling and installation to prevent damage.

(D) Prior to the installation of the stormwater chamber, the Contractor shall excavate the Bioswale area to the satisfaction of the Engineer.

(E) Install stone base, stormwater chamber, and backfill as indicated on the NYC Department of Environmental Protection Standard Design and Guidelines for Green Infrastructure Practices drawings.

GI-2.19.5. MANUFACTURERS

(A) CULTEC Inc.
P.O. Box 280
878 Federal Rd.
Brookfield, CT 06804
203-775-4416
www.cultech.com

(B) Stormtech
StormTech LLC
20 Beaver Road, Suite 104
Wethersfield, CT 06109
PH: 860-529-8188
www.stormtech.com

(C) Or approved equivalent

GI-2.19.6. MEASUREMENT.

The quantity to be measured for payment shall be the number of linear feet of HDPE STORMWATER CHAMBER installed to the satisfaction of the Engineer, measured along the centerline of the chamber from end to end; however, no measurement for payment will be made under this Item No. GI-2.19 for work being done in conjunction with Item Nos. ROWB-01, ROWB-02, ROWB-03, ROWB-04, ROWB-05, ROWB-06, ROWB-07, ROWB-08, ROWB-09, ROWB-10, ROWRG-01, ROWRG-02, and ROWRG-03.

GI-2.19.7. PRICE TO COVER.

The contract price bid for HDPE STORMWATER CHAMBER shall be a unit price per linear foot and shall cover the cost of all labor, material, equipment, insurance, and incidentals necessary to furnish, handle, store, and install a stormwater chamber within a bioswale, including, but not limited to, end caps, cutting holes in the sheets for utilities; all in accordance with the Contract Drawings, the specifications, manufacturers installation instructions, and the directions of the Engineer.

Earth excavation (GI-4.02), open graded stone base (GI-2.07D), and backfilling (4.11 CA), where called for on the Contract Drawings, will be paid under their respective items, unless otherwise specified.

Payment will be made under:

Item No.	Item	Pay Unit
GI-2.19	HDPE STORMWATER CHAMBER	L.F.

SECTION GI-4.02
EARTH EXCAVATION

GI-4.02.1 DEFINITION, EARTH EXCAVATION

(A) Earth Excavation shall include the excavation, removal and disposal of all materials of whatever nature encountered in the prosecution of the work, unless otherwise specified. All materials of whatever nature encountered shall be defined as including, but not limited to, the following:

(1) soil;

(2) stones;

(3) soft weathered rock that can be excavated by mechanical means other than air hammer or drilling and blasting;

(4) miscellaneous fill and refuse, trees under four (4") inches caliper, stumps up to 6" diameter, anything thrown away or rejected as worthless or useless (both organic and inorganic material) that can be excavated by mechanical means other than air hammer or burning and cutting;

(5) sidewalk pavements (all types) within limits of trenches and excavations and cutbacks;

(B) Earth Excavation <u>shall not</u> include the following:

(1) boulders in open cut as defined in Subsection 4.03.1 of the NYC Department of Transportation Standard Highway Specifications;

(2) contaminated or hazardous materials that materially affect the cost of removal and disposal to the Contractor; and,

(3) existing man-made objects or structures that are not shown on the contract drawings or indicated in the specifications, that could not reasonably have been anticipated by the Contractor, were not anticipated by the City, and which materially affect the cost of removal and disposal to the Contractor, as determined by the Commissioner.

(C) If the City anticipates that any of the items in paragraph (B) above need to be excavated and disposed of, a separate contract item will be included in this contract.

If a separate contract item is not included in the contract and the City determines: (1) that the Contractor could not have reasonably anticipated that such materials would need to be excavated and disposed of; and, (2) that such excavation and disposal would materially affect the Contractor's costs; then such excavation and disposal shall be paid for as Extra Work under Article 26 of the Standard Construction Contract.

GI-4.02.2 RELATED SPECIFICATIONS

SECTION 6.02 – Unclassified Excavation of NYC Department of Transportation Standard Highway Specifications

GI-4.02.3 EXECUTION

(A) The Contractor shall excavate all materials to the established lines and grades for the construction of all facilities included in this Contract, or as shown and specified, in accordance with the requirements of Section 6.02 of the NYC Department of Transportation Standard Highway Specifications, except as otherwise specified herein. Excavation shall include removing boulders of size less than one-half cubic yard. The limits of excavation shown on the drawings indicate the extent of work to be performed by the Contractor. The Contractor shall furnish and install any temporary side slope supports, bracing, and sheet piling required to perform the excavation to the depths and limits indicated.

(B) Water in Excavations - Prior to starting the work, the Contractor shall submit to the Engineer for approval, a detailed description of the method he proposes to use to prevent the collection of water in excavation during construction, including a coordinated sequence of operation for the entire project. Such prevention shall include, but not be limited to, providing drainage and diversion of runoffs by means of sandbagging and/or removal by pumping. Approval by the Engineer will not relieve the Contractor of his responsibility for the safety of the work, existing structures and adjacent property.

(C) Protection of Underground Utilities - Determine location of underground utilities and perform work in a way that shall avoid possible damage. Hand excavate as required. The Contractor assumes responsibility for damage to underground utilities when excavating and is required to call "One Call" @ 800-272-4480 a service that marks underground facilities on the surface, prior to excavation. Maintain grade stakes set by others until removal is approved by Engineer. However, the Contractor is advised that the provisions of 16 NYCRR Part 753 ("One Call") do not apply to City owned utilities. It shall be the Contractor's responsibility to determine the location of the City owned underground distribution systems. The Contractor shall make his own field observations and research the City's records to determine the location of such facilities before the commencement of excavation.

(D) Trees, Shrubs, and Grassed Areas: Trees, shrubs and grassed areas which are to remain shall be protected by fences, barricades, wrapping or other methods as shown, specified or approved by the Engineer and shall be replaced at no added cost to the City in the event they are destroyed or damaged as a result of excavation and or dewatering by the Contractor. Trees shall not be removed without approval of the Engineer unless shown on the Contract Drawings or specified herein. Dewatering shall be done as per Section GI-5.02, contained herein.

(E) Vehicles used to transport excavated materials to disposal sites shall, when traveling, be watertight and of such a construction as to prevent spillage. All method of transportation and disposal shall be subject to the approval of the Engineer.

(F) The Contractor shall provide a final Survey Data Report for each site which shall include, but not be limited to, the excavation area after all excavation work under this Section has been completed. This report shall include measurements of all final dimensions of the excavation area. The Contractor shall employ a tripod-supported auto-fire or auto-scan laser with built-in angle and distance measurements and software capabilities. No separate payment will be made for this work, the cost of which shall be deemed included under this Item GI-4.02.

GI-4.02.4 MEASUREMENT

The quantity of Earth Excavation to be measured for payment shall be the number of cubic yards of material of whatever nature encountered (except for ledge rock, unanticipated structures which cannot be removed using conventional excavating equipment, and hazardous materials) actually excavated from within the Green Infrastructure practice area and shall include, but not be limited to, sidewalk pavements.

The dismantling and removal of the existing street lights, traffic signals and fire alarms, etc., will be done by the various departments having jurisdiction, except as otherwise provided. The existing foundations for these facilities shall be removed by the Contractor to a plane two (2') feet below subgrade and such removal will be measured for payment under this item.

GI-4.02.5 PRICE TO COVER

The contract price bid for Earth Excavation shall cover the cost of all labor, materials, plant, equipment, insurance, and incidentals required for excavating and disposing of all materials of whatever nature encountered (except for ledge rock, unanticipated structures which cannot be removed using conventional excavating equipment, and hazardous materials) including, but not limited to, sidewalk pavements, foundations, curbs and sidewalks in areas to be widened; dewatering; protection of underground utilities; salvaging items designated for re use in the work; grading; backfilling; compaction and preparation of subgrades; additional excavation, when ordered by the Engineer; all, together with necessary incidentals, in accordance with the Contract Drawings, the specifications and the directions of the Engineer.

The quantity of excavation to be measured for payment under Earth Excavation shall not include excavation required under other Sections whose contract prices include the cost of excavation.

Payment will be made under:

Item No.	Item	Pay Unit
GI-4.02	EARTH EXCAVATION	C.Y.

SECTION GI-4.03
EXCAVATION OF BOULDERS IN OPEN CUT

GI-4.03.1 DEFINITION

Excavation of boulders in open cut shall include the excavation, removal and disposal of boulders or parts thereof from within the excavation limits, more than one-half (1/2) cubic yard in volume. The term boulders as used herein shall include riprap, rock fill, thrust blocks and loose masonry. It shall not include pavement and pavement foundation, or existing sewer or water main structures.

GI-4.03.2 REMOVAL

The Contractor may elect to remove an entire boulder when partly extending into the trench. Boulders shall be removed from the site of the work immediately after being excavated and measurements taken by the Engineer. Excavated boulders shall become the Contractor's property and shall be properly disposed from the site of the work at the Contractor's expense.

GI-4.03.3 NO SEPARATE PAYMENT

No separate or additional payment will be made for excavating, removal and disposal of boulders one-half (1/2) cubic yard or less in volume, the cost thereof shall be deemed included in the prices bid for all items of this contract.

No separate or additional payment will be made whenever the Contractor elects to remove an entire boulder that extends partly into the excavation limits. Payment will only be made for that volume of the boulder that is within the excavation limits. No separate or additional payment will be made for the removal of boulders or for the filling of voids left by the removal of boulders beyond the limits of excavation.

GI-4.03.4 MEASUREMENT

The quantity to be measured for payment under this item shall be the volume in cubic yard of boulders greater than one-half (1/2) curb yard removed from within the Green Infrastructure practice's limits of the excavation.

GI-4.03.5 PRICE TO COVER

The contract price bid per cubic yard for excavation of boulders in open cut shall cover the cost of all labor, materials, equipment, insurance, and incidental required to complete the work of excavating boulders within the Green Infrastructure practice's limits of excavation, in full compliance with the requirements of the specifications without regard to the subsequent use of the excavated material.

Payment will be made under:

Item No.	Item	Pay Unit
GI-4.03	EXCAVATION OF BOULDERS IN OPEN CUT	C.Y.

SECTION GI-4.06
GI CONCRETE ELEMENTS

GI-4.06.1 INTENT

This section describes the concrete elements associated with Green Infrastructure practice. The Contractor shall install concrete as shown on the NYC Department of Environmental Protection Standard Design and Guidelines for Green Infrastructure Practices drawings.

GI-4.06.2 KIND

(A) Concrete elements shall comply with the requirements of NYC Department of Transportation Standard Highway Specifications, Subsections 4.05.3, 4.05.4. and 4.05.5, and Section 4.14.

(B) Unless otherwise specified grout shall be Cement Grout composed of neat cement and water and shall comply with the requirements of Section 3.06 of the NYC Department of Transportation Standard Highway Specifications.

GI-4.06.3 PHYSICAL REQUIREMENTS

(A) The minimum acceptable average compressive strength of five- samples is 5000 psi, with no individual less than 4500 psi. The maximum acceptable average freeze/thaw loss of five- block samples, subjected to 42 freeze/thaw cycles in a 3% NaCl solution, shall not exceed 1.0%, with no individual sample exceeding 1.5%.

(B) Batching, mixing and placing of concrete shall conform to ASTM C94 "Specification for Ready-Mix Concrete" and ACI 304 "Guide for Measuring, Mixing, Transporting and Placing Concrete". All materials shall be pre-weighed prior to mixing. Concrete shall obtain a minimum compressive strength of 5,000 psi at 28 days of age. Concrete shall contain 6% entrained air by volume (plus or minus 1%).

(C) Fabrication and placement shall conform to ACI-318 "Building Code Requirements for Structural Concrete and Commentary".

GI-4.06.4 METHODS

(A) All concrete elements shall be furnished and installed as per the NYC Department of Environmental Protection Standard Design and Guidelines for Green Infrastructure Practices drawings. It shall be designed and constructed to fit as shown in the plans, so that no gaps or hazards exist once the concrete is installed.

(B) All equipment and methods of construction shall comply with the requirements of the NYC Department of Standard Highway Specifications, Subsections 4.05.4. and 4.05.5, and Section 4.14 with the following modifications and additions:

(1) For installations in existing pavement, the Contractor shall be required to first full-depth saw cut and remove the pavement to the dimensions of the concrete elements shown on the Contract Drawings and directed by the Engineer. The Contractor shall then backfill the excavated area to insure that the concrete element will be placed to its proper elevation with foundation material which shall comply with the requirements of Subsection 4.05.2.(A) of the NYC Department of Transportation Standard Highway Specifications.

The earth subgrade, immediately before foundation material is placed on it, shall be compacted to a minimum of 95 percent of Standard Proctor Maximum Density, smooth, parallel to and at

the required depth below the finished concrete element surface and be dampened with water sufficient only to be absorbed by the subgrade. The subgrade shall not be in a muddy or frozen condition and unsuitable material shall be removed and replaced with acceptable material thoroughly compacted.

The foundation material shall be placed on the prepared subgrade, in a manner to minimize segregation, using equipment and procedures approved by the Engineer. Uncontrolled spreading from piles dumped on the grade resulting in segregation will not be permitted. Foundation material shall then be wetted to the optimum moisture content, based on a laboratory 5 point Proctor density test, and thoroughly compacted using an approved plate compactor. Compaction of foundation material shall range between 90% and 95% of the Standard Proctor Maximum Density, as directed by the Engineer, depending upon material used. Unsatisfactory subgrade material shall be removed and replaced with acceptable material thoroughly compacted to a minimum of 95% of Standard Proctor Maximum Density. The top surface of the foundation material shall be parallel to the finished grade and at a distance below the grade equal to the specified thickness of concrete.

(2) Following the placing and spreading of concrete, it shall be struck-off and finished to conform to the cross-sections shown on the Contract Drawings. The final finish shall be made by brooming after the water sheen has disappeared as per the requirements for Bus Stop Pavements, Section 4.05.5.(K)(2) of the NYC Department of Transportation's Standard Highway Specifications.

(3) Contractor shall furnish and install a welded wire fabric as per the NYC Department of Environmental Protection's Standard Design and Guidelines for Green Infrastructure Practices. The welded steel wire fabric shall be laid in sheets which are straight and true to form and shall be securely held in position by approved methods so that they will be in their prescribed position after the concrete has been placed.

(4) Where the Contractor chooses to precast the concrete element, it shall be constructed in accordance with the following requirements:

Fabrication

a. Precast concrete elements shall be fabricated to conform to the shapes and sizes shown on the Contract Drawings.

b. The Contractor shall provide the Engineer with shop drawings and detailed construction procedures for the concrete element. Shop drawings shall show the form dimensions and location and type of reinforcement in the precast concrete elements. The drawings shall be delivered to the Engineer for approval ten (10) working days before fabrication is to begin. No work shall begin until the drawings are approved.

c. The tolerance on placement of welded steel wire fabric in the concrete element shall be $\pm$ 1 inch. The chairs, spacers or other devices used to maintain the welded steel wire fabric in position shall have rust resistant tips. The cost of any welded steel wire fabric required to transport the precast concrete elements shall be deemed included in the cost of these items.

d. Concrete shall be consolidated in the forms by internal vibrators. Exposed surfaces shall be free from objectionable imperfections, such as honeycomb and air voids as determined by the Engineer. If air voids collect at the interface of the concrete and forms, the forms shall be tapped on the outside with rubber mallets or similar devices to displace the entrapped air.

Curing

a. The precast concrete elements may be cured as per the requirements for cast in place concrete.

b. If the concrete elements are steam cured, the elements shall be cured in an enclosure free from outside drafts, and cured in a moist atmosphere. The temperature shall be maintained at a temperature between 125 degrees and 160 degrees F. by the injection of steam for a period of not less than 12 hours. Steam curing shall not begin in less than 2 hours from the time that the last concrete was placed. Care shall be taken by the Contractor to prevent localized "hot spots" caused by the steam lines. A continuous temperature time recorder is required for each enclosure. The temperature of the curing atmosphere for any method shall not be increased or decreased at a greater rate than 40 degrees F. per hour.

Repair

a. Where approved by the Engineer, occasional imperfections in manufacture or those caused by mishandling may be repaired. The repairs shall be properly finished and cured. The color of the repaired area shall match as closely as possible with the rest of the element color. Repairs may be made with a mixture of sand and cement, and shall be made to the satisfaction of the Engineer.

(C) Dimensions shall be as required in the contract documents. Dimensions shall not vary by more than 1/4 inch from those specified. Concrete elements shall be sound and free from cracks or other defects that would interfere with their proper placement or performance.

(D) Basis of Acceptance - The precast concrete element shall be accepted at the job site based on all of the following:

(1) The manufacturer's name must appear on the N.Y.S. Department of Transportation's Approved List of "Precast Concrete Manufacturers Approved for QC/QA Production" for either Product Group 1, 2, or 4.

(2) A manufacturer's certification.

(3) An acceptable product evaluation made by the Engineer.

(E) Prior to installation, the subgrade must be compacted and carefully graded such that the concrete element will be seated flush on the subgrade, at the proper elevation and slope as shown on the Contract Drawings.

GI-4.06.5 SUBMITTALS

A. Manufacturer must have experience in design and fabrication of similar products and with facilities for fabricating the precast concrete culvert cover with the quality specified herein and without delay to the specified schedule.

B. The Contractor shall furnish: Shop drawings, in accordance with the requirements of Subsection 1.06.13. of the NYC Department of Transportation Standard Highway Specifications. Engineering layout drawings will be provided for approval and to assist field installation. The drawings will include dimensions, identification and location of each trench part in the trench layout along with a bill of material.

GI-4.06.6 MEASUREMENT

The quantity to be measured for payment shall be the number of cubic feet of concrete used in concrete elements constructed at the site to the satisfaction of the Engineer, measured in place to the nearest tenth of a cubic foot.

GI-4.06.7 PRICE TO COVER

The contract price bid per cubic foot of concrete elements shall cover the cost of all labor, materials, equipment, insurance, and incidentals necessary to complete the work including, but not limited to, excavation of existing pavement, concrete, welded steel wire fabric, grout, backfilling, and restoration of any disturbed adjacent pavement, as may be required, to satisfactorily complete the work; preparation and submission of shop drawings and concrete mix design criteria; supports, forms, joint filler, and joint sealer; leveling course material; foundation materials in accordance with Subsection 4.13.4 (B) of the NYC Department of Transportation Standard Highway Specifications; curing; damping of the subgrade; to furnish samples for testing; and to maintain the reinforced concrete elements in good condition as specified in Section 5.05 of the NYC Department of Transportation Standard Highway Specifications; all in accordance with the Contract Drawings, the specifications and the directions of the Engineer.

Payment will be made under:

Item No.	Item	Pay Unit
GI-4.06 A	REINFORCED CONCRETE APRON	S.F.
GI-4.06 SP	CONCRETE SEDIMENT PAD	L.F.
GI-4.06 CC-A	CONCRETE CHAMBER (TRENCH) AT INLET	EACH
GI-4.06 CC-B	CONCRETE CHAMBER (TRENCH) AT OUTLET	EACH
GI-4.06 CO	CONCRETE CULVERT WALKWAY AND FOOTER FOR HYDRAULICALLY CONNECTED ROWBS	L.F.
GI-4.06 CU	REINFORCED CONCRETE CULVERT AND COVER	L.F.
GI-4.06 CG	REINFORCED CONCRETE GUTTER	L.F.
GI-4.06 CS	CONCRETE STRIP	L.F.

SECTION GI-5.02
(NOT A PAY ITEM)
DEWATERING

GI-5.02.1. DESCRIPTION

Construction dewatering shall consist of controlling surface water such that excavation required on the Contract Drawings can be performed to required depths in substantially dry and stable conditions.

GI-5.02.2 MATERIALS

(A) All pumps used in the dewatering operation shall be electric and shall be powered directly from a Con Edison drop, unless otherwise unavailable.

GI-5.02.3. CONSTRUCTION METHODS

(A) The Contractor shall at all times during the progress of the work keep the excavations free from water. The water from the excavations shall be disposed of in such a manner as will not cause injury to the public health, nor to public or private property, nor to the work completed or in progress, nor to the surface of the streets, nor cause any interference with the use of the same by the public. All sewers used for disposal of water from the excavation during construction shall be acceptably cleaned.

(B) Surface water on and around the site shall be collected into local sumps by means of trenches, pipes, or other means. The Contractor shall discharge the water into the City wastewater collection system. Direct surface water to minimize surface erosion, ponding and softening of slopes and berms, including haul roads and equipment working stations. Slope protection by means of polyethylene sheets, held in place by tires or otherwise, shall be provided locally as required. At the perimeter of the excavation, surface water is to be directed into the storm sewer system and not permitted to enter the excavation. Curbs shall be maintained and, where necessary, extended across intersections, curb cuts and defective curb sections.

(C) The Contractor shall, with the Contractor's own equipment, provide dewatering where required at no additional cost to the City. The cost for all labor, equipment, materials, etc. required to dispose of water from the excavation shall be deemed included in the prices bid for all items of the contract.

(D) All dewatering and discharge pipes and hoses which cross traveled roadways shall be placed in such a manner so as to eliminate any disruption of traffic flow.

GI-5.02.4. MEASUREMENT AND PAYMENT

No separate payment will be made for this work, the cost of which shall be deemed to be included under all scheduled items.

SECTION GI-5.05
(NOT A PAY ITEM)
PLANTING TREES IN RIGHT OF WAY BIOSWALES, RIGHT OF WAY RAIN GARDENS AND STORMWATER GREENSTREETS

GI-5.05.1 DESCRIPTION

The Contractor shall provide all labor, materials, equipment, insurance, and incidentals required to furnish and plant the scheduled trees in the bioswale, as shown on the Standards for Green Infrastructure Practices and in accordance with the specifications and the directions of the Engineer.

GI-5.05.2 SUBMITTALS

(A) Before digging the pits, the Contractor shall submit, for approval, his method of soil preparation and planting to perform the work shown on the plans. Soil amendments shall be thoroughly mixed by approved methods. The soil around each plant shall be thoroughly saturated with water upon planting. Subsequent watering and weeding shall be provided under the requirements of Section GI-5.09, contained herein, at no additional cost.

(B) List of Materials/Suppliers: Submit a complete materials list (e.g., trees, mulch, cedar stakes, shrubs, etc.) of items to be provided under this section, for review by the Engineer or representative before the purchase or use of any such material.

(C) Method of Work: Submit a list of proposed methods of execution of work under this section for review by the Engineer when proposed methods are different from, or supplementary to, those specified herein.

(D) The Contractor must submit the following information to the Engineer immediately following the Notice to Proceed:

(1) Subcontractor(s): The name of a Landscaping Contractor, acceptable to the Engineer, who will be performing all landscaping work (seeding and woody plant material). The proposed subcontractor will be evaluated on the following criteria:

a. Prior satisfactory experience in the installation of Green Infrastructure Systems.

b. Demonstrated capacity to accomplish the work in the time allotted. Qualifications of the Contractor's Tree Consultant, certified by the International Society of Arboriculture (ISA), and approved by the New York City Department of Parks and Recreation - who shall be required to be present on site while landscaping work is in progress.

c. Landscaping experience with other agencies, such as the Department of Environmental Protection (DEP) and the New York City Department of Parks and Recreation. Provide references and a specific contact person.

d. Membership with appropriate ecological restoration organizations.

e. Other references or experience deemed appropriate to obtaining approval.

f. The following is required prior to the start of landscaping work:

1) List of all materials and certificates specified within this item.

2) Schedule/Methods of Operation/Maintenance Plan (which is up to the end of maintenance period specified in the Schedule A of this project).

3) List of all equipment to be used.

GI-5.05.3 QUALITY CONTROL

Sources

(A) Primary Source. All trees obtained from nurseries must have been produced by plants with a provenance from within a 250-mile radius of the planting site. The Contractor shall submit written verification from the nurseries on their letterhead (submittals on contractor letterhead will be rejected), certifying the collection location of plant species seed sources and cuttings (when applicable) for all plant material used on this project. However, a reasonable effort shall be made to obtain sources of plants as close to the planting site as possible. All plants grown and/or originating from outside the 250-mile radius will be rejected. In addition, all plants must have been grown within the 6a to 7a, inclusive, USDA Plant Hardiness Zones as that of the planting site. No substitutions of specified plants will be accepted without the written permission of Engineer.

Ship landscape materials with certificates of inspection when required by governmental authorities. Comply with governing regulations applicable to landscape materials.

(1) Nurseries that collect plants from the wild will be rejected.

(2) If specified landscape material is not obtainable, submit proof of non-availability, with written proposal for use of equivalent material to Engineer.

(3) The Contractor shall provide trees of quantity, size, genus, species shown and scheduled for landscape work and complying with recommendations and requirements of ANSI Z60.1 "American Standard for Nursery Stock" as referenced above (e.g., container size, plant height, number of stems, etc.). The Contractor shall provide healthy, vigorous stock, grown by a professional nursery in accordance with good horticultural practices and free of diseases, insects, eggs, larvae and defects including, but not limited to, knots, sun-scald, injuries, abrasions, or disfigurement.

(4) All plants furnished under this Item shall be true to name. Plant names shall agree with the nomenclature of "Manual of Vascular Plants of the Northeast United States and Canada," Gleason and Cronquist, 1991. Size and grading shall conform to those of the American Association of Nurserymen.

Inspection of Plant Material at Nursery

(A) The Engineer or his representative shall inspect all plant material used on this project at the place of growth before planting, for compliance with requirements for genus, species, variety, size and quality. The Contractor shall be responsible for all inspection costs beyond a 50-mile radius from the planting Site.

(B) The Engineer or his representative retains the right to further inspect all plant material for size and condition of root system, insects, injuries and latent defects, and to reject unsatisfactory or

defective material anytime during the progress of work. The Contractor shall remove rejected plant material from the project site immediately upon notification without compensation.

(C) Only tagged samples of plant material shall be delivered to the site and planted in locations approved by the Engineer or representative.

(D) The Contractor shall be responsible for all certificates of inspection of plant materials that may be required by Federal, State or other authorities to accompany each shipment of plants and on arrival, the certificates shall be filed with the Engineer.

GI-5.05.4. CONSTRUCTION METHODS

(A) Plants shall be delivered only when preparations for planting have been completed and plants can immediately be installed. If planting is delayed for more than six hours after delivery, set plant material in shade, protect from mechanical damage and keep roots moist by covering with mulch, burlap or other acceptable means of retaining moisture, watering as necessary.

(B) All plants shall be subject to inspection and approval by the Engineer. Plants required for the work will be inspected and tagged at the place of growth before being dug. The Contractor shall be responsible for all costs related to inspection of plant material by the Engineer beyond a radius of 50 miles from New York City. Selection and/or tagging of material shall cover the type and quality of the plant only, but shall not constitute final acceptance nor preclude the right of rejecting plants not fully meeting the requirements of the specifications. No plant material shall be accepted without prior nomenclature labeling at the nursery of origin. The nursery label must display the full botanical name of the plant.

(C) Cultivars or varieties are not acceptable and written verification from the nurseries certifying this requirement will be required on all plant material. The Contractor should only consider straight species when ordering plant material.

(D) Each shipment of plants must be declared and certified free of diseases of any kind with such necessary inspection certificates accompanying each shipment.

(E) All nursery stock furnished by the Contractor shall be subject to inspection within 48-hours after delivery of said stock. The plants shall also be subject to such inspection during the life of the Contract, and infestations occurring on the stock as a result of conditions existing prior to the receipt of the plants on the project shall be cause for rejection.

(F) The time of planting is subject to the type and size of the material, method of planting and approved planting schedule. The Contractor shall furnish a certification from the nursery regarding the date of digging for all applicable plant material.

(G) Unless otherwise directed by the Engineer in consultation with the NYC Department of Parks and Recreation Green Infrastructure Liaison, plant material may be transplanted from March 1st to May 1st and from October 15th to December 15th or as weather permits; deciduous material shall be planted from March 1st to May 1st and October 15th to December 15th or as weather permits. Evergreen material shall be planted from April 1st to May 15th and from September 1st to October 15th or as weather permits. No plant material shall be planted when the ground is frozen or in

excessively moist condition. Notify the Engineer and NYC Department of Parks and Recreation Green Infrastructure Liaison at least three days (excluding weekends) in advance before proceeding with any planting operations. In case the planting season is missed for any reason, the Contractor shall cover the soil with mulch. Mulch shall comply with the requirements of Section PM-01 through PM-24 - Woody and Herbaceous Plant Material, contained herein.

(1) No shipment of plant materials shall be unloaded or planted by the Contractor until such materials have been inspected and accepted by the Engineer, and inspection certificates, if any, have been delivered.

(2) The Contractor shall proceed with and complete work expeditiously, working within the seasonal limitations for each kind of landscape work required.

(3) Determine location of underground utilities and perform work in a way that shall avoid possible damage. Hand excavate, as required. The Contractor assumes responsibility for damage to underground utilities when excavating and is required to call "One Call" @ 800-272-4480 a service that marks underground facilities on the surface, prior to excavation. Maintain grade stakes set by others until removal is approved by Engineer. However, the Contractor is advised that the provisions of 16 NYCRR Part 753 ("One Call") do not apply to City owned utilities. It shall be the Contractor's responsibility to determine the location of the City owned underground distribution systems. The Contractor shall make his own field observations and research the City's records to determine the location of such facilities before the commencement of excavation.

(4) When conditions detrimental to plant growth are encountered, such as rubble fill, adverse drainage conditions or obstructions, notify Engineer before planting.

(5) The Contractor shall furnish a certification from the nursery regarding the date of digging. All appropriate plant material shall be sprayed in the nursery within 48 hours prior to digging with an approved anti-desiccant.

(H) Sizes of planting pits shall be as proposed in the Contractors approved shop drawing submittals.

(I) All plant material shall be thoroughly watered immediately after installation. Planting will not be permitted unless a water truck is on site and made available whenever the Contractor is installing plant material. Refer to Section GI-5.09 – Watering and Weeding During Maintenance Period.

(J) Anti-desiccant spraying - Unless otherwise directed all trees shall be sprayed with an approved anti-desiccant (Wilt Pruf NFC or approved equivalent) using a power sprayer to apply adequate coverage, according to manufacturer's directions, over trunks, branches, twigs and foliage as directed by and in the presence of the Engineer. The Contractor is to read the product label carefully as some plant material can be injured from the application of an anti-transpirant. The material to be used shall be emulsions or other materials that will provide a protective film over plant surfaces, yet permeable enough to permit transpiration. The time of spraying shall be as follows, unless otherwise directed by the Engineer:

Deciduous: Spring planting - Apply when leaves have reached seventy-five percent (75%) of mature size.

(K) Where deemed necessary by the Engineer, stakes for supporting trees shall be White or Red cedar, with a minimum diameter of three inches. Contractor shall use Camb Guards rubber supporting straps for trees model # 92-111, 92-112, or 92-113 by Keslick and Son Modern Arboriculture, 214 N Penn Street, West Chester PA, 19380 (610)-696-5353 or approved equal. Camb Guards around tree trunk and stake shall be fastened in such a manner as to allow slight movement of trunk.

Camb Guard ® Specifications

Tree Diameter	Model Number
2" or less	92-113
2" or larger	92-112 or 92-111

(L) In natural area plantings, Engineer will field determine if stakes are required. If it is determined that staking is required, a modified staking system shall be used. The modified stakes shall be shorter than conventional stakes. In either situation, stakes shall be maintained by the Contractor until the end of the maintenance period or as directed by the Engineer. The Contractor shall remove all stakes and camb guards at the end of the-maintenance period or as directed by the Engineer.

GI-5.05.5. PLANT SCHEDULE

(A) No planting shall be done except in the presence of the Engineer and in accordance with the planting season as described in Subsection GI-5.05.4.(G). While trees with exposed roots are being distributed in planting beds or are awaiting planting after distribution, the Contractor shall protect the roots from drying out; the means employed shall be satisfactory to the Engineer. All trees shall stand, after settlement, at the same level at which they have grown. Care shall be exercised in setting the plants plumb. All ropes, stones, etc., shall be removed from the pit before backfilling. Soil for backfilling shall be loose and friable.

Planting Schedule

Deciduous	March 1 to May 1 and October 15 to December 15
Evergreen	April 1 to May 15 and September 1 to October 15

(B) Approval of new plantings in each Bioswale will not occur until all landscaping work has been completed. The Contractor shall be responsible for maintaining all new planted trees.

GI-5.05.6. MEASUREMENT AND PAYMENT

No separate payment will be made for this work, the cost of which shall be deemed to be included under other scheduled items, as appropriate.

SECTION GI-5.06
(NOT A PAID ITEM)
TREES (PROTECTION, PRUNING, REMOVAL, STUMP REMOVAL, TRANSPLANTING AND PLANTING)

GI-5.06.1. DESCRIPTION

Tree work shall be done in accordance with *New York City Department of Transportation (NYCDOT) Standard Highway Specifications* Section 4.16 - Trees (Removal, Transplanting, Planting). However, all tree and stump removals shall be done under the appropriate scheduled contract items.

Tree Pruning shall be done in accordance with *New York City Department of Transportation (NYCDOT) Standard Highway Specifications* Section 4.18 - Tree Pruning.

Protective Tree Barrier shall be done in accordance with Subsection 1.06.5 and *New York City Department of Transportation (NYCDOT) Standard Highway Specifications* Section 4.22 - Protective Tree Barrier.

The Tree Consultant whose credentials are subject to NYC Parks approval, will be provided by the contractor for this project. The Tree Consultant will advise and oversee excavation work around existing trees under all stages of work. The Tree Consultant will work with the Borough Forester, an oversight position within NYC Parks, to ensure all work is done to industry standards and the latest DPR Tree Planting Standards.

GI-5.06.2. PROTECTION OF EXISTING TREES AND SHRUBS:

In all cases where the NYC Department of Parks & Recreation has determined that construction work will impact the critical root zone of existing trees, the Contractor is responsible for the formulation of a Tree Protection Plan in consultation with the Tree Consultant.

This plan should include, but not necessarily be limited to, the location of pavements to be removed within critical root zones, temporary wooden tree guards, construction fence or temporary snow fence boundaries, areas to be excavated by hand and/or pneumatic methods, soil compaction prevention and mitigation requirements, and impacts of trenching and/or cut and fill operations.

In addition, the plan should address the Contractor's operations, including designated staging areas, site access and stockpiling of materials.

Mandatory provisions of the Tree Protection Plan shall always include, but are not limited to, the following provisions:

A. The Contractor shall not be permitted to park vehicles or equipment or to stockpile materials of any nature under the drip line of trees and shrubs in order to minimize surface and subsurface root damage and soil compaction. This directive shall apply to all areas within or outside the contract limit line.

B. All tree pruning, tree removal and tree decompaction is to be supervised by the approved Tree Consultant, as per *New York City Department of Transportation (NYCDOT) Standard Highway Specifications* Section 4.21.

C. All contact between equipment and overhead tree limbs should be avoided. Bending or breakage of limbs is prohibited. If clearance pruning is proposed, it shall not take place without the written permission of the Borough Forester, and then shall only be performed with professional equipment as per the NYC Department of Parks and Recreation's standards and specifications for such work.

D. All trees within or adjacent to the limits of disturbance are to receive at least one (1) inch (the equivalent of 750 gallons of water per 1000 square feet of tree protection zone) of water per week between the months of March and October as directed by the Engineer in consultation with the Tree Consultant and/or the NYC Department of Parks and Recreation Borough Forester. If rainwater in any given week is below this quantity, the Contractor must supplement the amount received by utilizing soaker hoses or as directed by the Engineer in consultation with Tree Consultant and/or the NYC Department of Parks and Recreation Borough Forester. If a water source is unavailable at the site, then the Contractor must provide tree irrigation bags or a water truck to apply the requisite amount of water.

E. Where excavations occur within the critical root zone for the removal of existing features or installations of new work, the excavated area shall be backfilled immediately. Where exposed roots cannot be backfilled immediately the Contractor may, for a period of time not exceeding forty-eight (48) hours, treat roots by covering them with moistened fabric or burlap covered with white plastic. This treatment shall be checked a minimum of two (2) times a day to ensure that roots are kept moist at all times. These checks are to occur once in the morning and once in the afternoon. If directed by the Engineer in consultation with Tree Consultant and/or the NYC Department of Parks and Recreation Borough Forester, soaker hoses shall be installed to facilitate adequately moist conditions. No pooling of water or continuous running water shall occur within the critical root zones other than that during the irrigation process.

F. Any excavation within the critical root zone as indicated on the plans or by the Engineer in consultation with Tree Consultant shall be performed by hand. This work includes but is not limited to the breaking of concrete or asphalt with a pneumatic (jack) hammer and excavation of soils/fill with pneumatic tools (air spade or air knife) or shovel, or approved equivalent. All excavation within the critical root zone shall be performed under the supervision of a Tree Consultant.

G. The Contractor shall exercise extreme care in removing concrete or asphalt within the tree protection zone, lifting rather than dragging paving pieces. Tools and equipment for this activity shall be approved by the Engineer in consultation with Tree Consultant or the NYC Department of Parks and Recreation Borough Forester prior to the start of excavation.

H. If directed by the Engineer in consultation with Tree Consultant and/or Borough Forester, the critical root zone of a tree shall be covered with woodchips to a depth of at least six (6) inches in order to protect roots from damage caused by heavy equipment. Such covering shall be maintained during the course of construction and removed after the end of construction. Removal shall be by hand or as specified by the Engineer in consultation with Tree Consultant and/or the NYC Department of Parks and Recreation Borough Forester.

I. Roots over 1" in diameter shall not be cut without the written permission of the Engineer in

consultation with the Tree Consultant or Borough Forester or his designated representative.

J. Protective fencing, pruning, tree guards, woodchips shall be paid for separately as per the drawings or as directed by the Engineer in consultation with Borough Forester.

K. Tree guards with tree wraps as specified by the NYC Department of Parks and Recreation shall be installed on all trees within or adjacent to the limits of disturbance as directed by the Engineer in consultation with Tree Consultant or the NYC Department of Parks and Recreation Borough Forester. Protective fencing shall be installed along the perimeter of the tree protection zones for individual trees or groups of trees within or adjacent to the limits of disturbance or as directed by the Engineer in consultation with Tree Consultant or the NYC Department of Parks and Recreation Borough Forester.

L. Fencing material shall follow NYC Department of Parks and Recreation's specifications and standards and shall be construction (chain link) fencing or orange polyethylene (snow) fencings or range fencing, as specified by the Engineer in consultation with the Borough Forester, or his designated representative. The minimum height of fencing shall be four (4) feet.

M. Fences and tree guards shall not be removed or moved without written permission of the Engineer in consultation with Tree Consultant or the NYC Department of Parks and Recreation Borough Forester.

N. All tree protection fenced zones shall be so indicated with signage posted visibly on the fenced in area as directed by the Engineer in consultation with Tree Consultant or the NYC Department of Parks and Recreation Borough Forester. Wording shall read "Tree Protection Zone".

O. Signs will be provided by the NYC Department of Parks and Recreation. Contractor is to be held responsible for fixing and maintaining signs for the duration of the Contract.

P. Planting beds within critical root zones may only be installed in the presence of the Tree Consultant or the NYC Department of Parks and Recreation Borough Forester. All excavation and plant installation is to be done by hand, with minimal soil disturbance. No roots over 1" in diameter shall be cut without the written authorization of the NYC Department of Parks and Recreation Borough Forester. Plants shall not be placed within 3 feet of the tree trunk unless directed by the Engineer in consultation with Tree Consultant or the NYC Department of Parks and Recreation Borough Forester.

REMEDIATION:

In the event of damages to trees and shrubs resulting from the Contractor's work, as determined by the NYC Department of Parks and Recreation Borough Forester, the following shall apply:

At the completion of the construction project and in response to field conditions, any of the following site restoration/mitigation measures may be required by the NYC Department of Parks and Recreation in addition to those specified in the Tree Protection Plan. These measures shall be assumed at the expense of the Contractor and shall not be done without the approval of the NYC Department of Parks and Recreation Borough Forester.

a. Decompact tree. See Subsection GI-5.06.3, below.

b. Hand and/or Pneumatic excavation. See I-Pages Section GM-11, contained herein.

c. Pruning of dead or diseased tree branches.

d. Root collar excavation, to remove any soil that accumulated around the base of the tree during construction.

e. Tree irrigation, for up to one year after the end of construction. Method shall be as per I-Pages Section GI-5.09.

f. Soil replacement in eroded areas.

g. Root pruning.

h. Bark tracing.

DAMAGE ASSESSMENT:

a. Tree damage. For trees that are damaged during the course of construction, a monetary credit shall be taken. The monetary assessment shall be the difference between the tree's condition rating, as per the International Society of Arboriculture appraisal method, before and after the damage. The damage assessment shall be determined by the Borough Forester.

b. Tree Destruction. Any trees irreparably damaged during the course of construction, as determined by the NYC Department of Parks and Recreation Borough Forester, shall be removed at the Contractor's sole expense. Restitution shall be made according to the New York City Tree Valuation Protocol, as determined by the NYC Department of Parks and Recreation. Restitution can be met by the Contractor through the following options:

(1) Direct planting by the Contractor or its subcontractor of the required equivalent number of replacement trees at locations determined by Central Forestry (for street trees) and the Borough Forester (for parks and natural areas); or

(2) A monetary credit for the value of the tree destroyed; or

(3) A combination of (1) and (2) above, as determined by NYC Department of Parks and Recreation Central Forestry and/or the NYC Department of Parks and Recreation Borough Forester. If the Contractor plants some replacement trees, a monetary credit shall be taken for the difference between the full value of the destroyed tree and the value of the number of replacement trees planted.

c. Tree Removal. Restitution for any prohibited tree removals shall be made according to the New York City Tree Valuation Protocol, with adjustments for tree condition as per the International Society of Arboriculture appraisal method, as determined by the NYC Department of Parks and Recreation.

Tree protection deficiencies. In addition to the remedial actions described above, failure to follow the tree protection guidelines in this Article will result in assessment of liquidated damages. When a tree protection deficiency, as determined by the NYC Department of Parks and Recreation Borough Forester, is identified, it must be remedied within 24 hours of notification by the NYC Department of Parks and Recreation. Failure to correct the deficiency within this timeframe will result in a

liquidated damages assessment of $300 for each day, or part thereof, that the tree protection deficiency is not remedied.

GI-5.06.3. DECOMPACT TREE OVER 6" TO 12" DBH:

WORK:

Under this Item, the Contractor shall *DECOMPACT TREE OVER 6" TO 12" DBH*, in accordance with the plans, specifications, and as directed by the Engineer in consultation with the Tree Consultant (Item 4.21).

Note: DBH is defined as Diameter at Breast Height, which is 4'-6" above mean grade.

NOTIFICATION:

Before any pruning work can begin under this item, the NYC Department of Parks and Recreation Borough Forestry must be notified a minimum of 48 hours prior to beginning work. The NYC Department of Parks and Recreation Borough Forestry contacts are as follows:

Bronx: (718) 430-1877

Brooklyn: (718) 965-7750

Manhattan: (212) 860-1845

Queens: (718) 393-7373

Staten Island: (718) 390-2080

All of the following information and instructions are subject to the approval and direction of the NYC Department of Parks and Recreation Borough Forester.

QUALIFICATIONS REQUIRED:

All work shall be performed in the presence of the approved Tree Consultant holding a current certification by the International Society of Arboriculture (I.S.A.). Also, see requirements listed under heading "Submittals", and in the General Conditions and Special Provisions, Section C. For additional information regarding procedures, contact the Director of Arboriculture and Horticulture Unit at (718) 760-6736.

MATERIALS:

Compost: shall contain organic matter, or material of generally humus nature capable of sustaining the growth of vegetation, with no admixture of refuse or material toxic to plant growth. The Compost shall be free of pathogens and stones, lumps, or similar objects larger than two inches (2") in greatest diameter, as well as roots, brush, and weeds.

Composts that have been derived from organic wastes such as food and agriculture residues, animal manures, and sewage sludge that meet the above requirements, and are approved by the New York State DEC, are acceptable compost sources. Compost shall have an approximate N-P-K analysis of at least 1-1-0 as delivered, with a pH between 5.5 and 8.0 and a solids content of at least fifty percent (50%). Compost shall have a minimum of twenty five (25%) to a maximum of fifty percent (50%) organic material.

Compost shall be from Long Island Compost, Islip, NY or "Nature's Choice Compost" by Nature's Choice Corp., Union, NJ, or Agresoil compost by Agresource, Inc. Amesbury, MA or approved equal. Organic biosolids are not acceptable. Compost available from NYC Department of Sanitation may be acceptable for purposes of this specification. See www.nyc.gov/sanitation or www.nyccompost.org for pick-up sites.

METHOD:

Where specified, existing trees to remain shall be decompacted after completion of construction operations including excavation, paving, pruning, and backfilling. Decompaction shall be performed utilizing one of the three methods listed below as shown on the contract tree protection plan or as determined by the Engineer in consultation with the supervising Tree Consultant or the NYC Department of Parks and Recreation Borough Forester. All tree root protection shall be removed prior to starting decompaction and decompaction shall not be performed in frozen ground conditions.

1.Air-Tilling of the Critical Root Zone Method: Using a pneumatic device, the area within a 3 to 5 foot radius of the tree stem, and specified on the Tree Protection Plan, is to be tilled to a depth of 6 to 8-inches using a compressed air gun. Compost backfill shall be applied to the area at a depth of 1-inch and tilled into the soil using a compressed air gun. The area shall be top dressed with four-inches (4") of shredded bark mulch and thoroughly watered (paid under a separate item).

2. Radial Trenching Method: Using a pneumatic device, narrow trenches, 18 to 24-inches wide, shall be cut in a radial pattern throughout the root zone. These trenches appear similar to the spokes of a wagon wheel. The trenches shall begin two (2') feet from the trunk of the tree and between buttress roots to avoid cutting any major support roots. The trenches should extend at least as far as the dripline of the tree. The trenches shall be 8-12 inches in depth. Compost backfill shall be used to fill the trenches. Where required, fertilizer may be mixed with the compost and applied. The area shall be thoroughly watered after completion.

3. Vertical Mulching Method: Three inch (3") diameter holes shall be excavated 12" deep, spaced 30" on center in a grid pattern throughout the root zone of the tree. Proposed tools and methodology for this work must be submitted and approved by the Director of Capital Arboriculture and Horticulture or his or her designated representative. Compost backfill shall be used to fill the holes and the area shall be thoroughly watered after completion.

Tree DBH	Number of 3" Dia. Holes
0-6"	40
6-12"	60
12-18"	80
18-24"	100
24-30"	120
30-36"	160
36-42"	180
42-48"	200
over 48"	220

Where a pneumatic device is required, work shall be performed with a device such as an Air-Spade® CGP System, as manufactured by Concept Engineering Group, Inc. Verona, PA, or approved equal. The Contractor shall provide a compressor unit for operating the pneumatic excavator rated at one hundred fifty standard cubic feet per minute (150 scfm) at ninety pounds per square foot gauge (90 psfg). Different nozzles may be used on the air spade to expedite the work or minimize the amount of airborne material. Where a pneumatic device is used, care shall be taken to avoid rocks being scattered and inadvertently damaging private or public property. In addition, operators must be equipped with adequate protective clothing and gear, in accordance with manufacturer's recommendations. All tree roots exposed by the pneumatic or hand excavation operation must be kept constantly moist with burlap covered with white plastic and checked a minimum of two (2) times a day, once in the morning and once in the afternoon, for a maximum of forty-eight (48) hours, until backfill is complete as directed by the Engineer in consultation with the supervising Tree Consultant.

Watering: Watering shall take place at one-week intervals for a period of three weeks following decompaction at a rate of 750 gallons of water per 1000 square feet of decompacted area. The supervising Tree Consultant may order less watering based on weather conditions, resulting soil water content or other factors. If drought conditions warrant, the Engineer in consultation with the supervising Tree Consultant may order more frequent watering than scheduled or during non-scheduled periods. A watering schedule shall be submitted to supervising Tree Consultant each week.

Watering for trees shall be conducted by dispersing water to plants individually. Water shall be delivered to each plant under low pressure through the end of an appropriate sized hose or watering wand, or soaker hose anchored by pins where appropriate. The rate of watering should allow maximum penetration of water into the soil and at a rate that does not displace mulch or soil, cause uprooting or exposure of plant root to the air or break saucers around plants that were created to hold water.

Water shall not be applied in a manner which damages plants, stakes or adjacent areas. Watering shall not cause uprooting or exposure of plant's roots to the air. Damages resulting from these operations shall be immediately repaired at the Contractor's expense.

Where water is supplied from City hydrants, the Contractor shall obtain a free hydrant permit from the NYC Department of Environmental Protection. Permits are issued for a 30-day period, and the Contractor is responsible for keeping the permits current. The permits are available from each NYC Department of Parks and Recreation Borough Forestry office.

SUBMITTALS:

All submittals shall be as specified in Section C, Special Provisions, Article 11. The Contractor shall submit the following for review and approval prior to performing work.

Tree Consultant Qualifications: The Contractor shall submit for approval, the name and qualifications of the proposed tree care sub/Contractor. The Contractor shall submit the following:

1.) I.S.A. certification.

2.) Name, address, and phone numbers for three (3) professional references associated with similar work performed within the past three (3) years.

The Tree Consultant shall meet the qualifications listed on the first page of this item under the heading Qualifications Required:. Verification of certification, qualifications, and references must be submitted to the NYC Department of Parks and Recreation's Borough Forester for approval prior to performing any work.

GI-5.06.4. MEASUREMENT AND PAYMENT

Unless otherwise provided for, no separate payment will be made for this work the cost of which shall be deemed to be included under other scheduled items, as appropriate.

SECTION GI-5.09
(NOT A PAY ITEM)
WATERING AND WEEDING DURING MAINTENANCE PERIOD

GI-5.09.1. DESCRIPTION

The Contractor shall maintain and cultivate the healthy growth of all plantings in the planted area after installation, in accordance with the specifications and contract drawings during the maintenance period of the project. For the purposes of this item, the maintenance period shall begin after the completion of planting, and terminate at the completion of the maintenance period. No separate payment shall be made for the work of this specification.

GI-5.09.2. SUBMITTALS

(A) The Contractor's Landscape Subcontractor shall submit a watering and weeding plan and maintenance schedule prior to the installation of plant material, to be approved by the Engineer. The plan shall include proposed methods of watering and weeding, including but not limited to the use of tree gators (bags), sprinklers, drip hoses, irrigation, tanker vehicles and hand watering, etc., as well as manual weeding and weeding tools.

(B) The approved plan and schedule do not relieve the Contractor in any way from any aspect of the replacement of dead plant material. The Contractor's Landscape Subcontractor may alter the maintenance schedule based on weather and field conditions.

GI-5.09.3. METHODS

(A) The Contractor responsibilities under this section consists of watering and weeding after installation as required to maintain installed plant material in a healthy and vigorous condition in the specified Engineered Soil and Sand, in accordance with the specifications and Contract Drawings.

(B) Watering shall take place at one-week intervals from May 1 through October 31, for a total of twenty-seven (27) waterings per year or a total of fifty-four (54) waterings for the 2-year guarantee period. Each week, the individual plants shall receive the following volume of water:

PLANT SIZE	VOLUME OF WATER (gallons)
# 1 container	2
# 2 container	2.5
# 3 container	3
# 7 container	6
1" – 2" caliper	18
2" – 3" caliper	30

This is the maximum amount of water to be applied each week. The Engineer may order less watering based on weather and soil conditions.

Watering shall not be done for any given week if soil is saturated from recent rains or snowmelt. During extended dry periods, the Engineer may order more frequent watering than scheduled or during non-scheduled periods. However, the total number of 54 watering cycles will not be exceeded.

Watering shall be applied in such a manner as to not damage plants or remove mulch (jute mesh) and stakes. Watering shall not cause the uprooting or the exposure of plant roots. Damage resulting from improper watering shall be immediately repaired at the Contractor's expense.

GI-5.09.4. MAINTENANCE

(A) Horticultural Maintenance shall consist of the weeding, removal of litter and general maintenance and replacement of plant material.

(B) Green Infrastructural Maintenance shall consist of cleaning out and disposing of sediment from inlet and outlet structures and weep holes (if any) as necessary to allow water to move freely in and out of the site. Layers of mulch (jute mesh) (if any) and stone in or around the inlet, storm water flow path and ponding areas may require removal and replacement as deemed necessary by the Engineer, just prior to the end of the contract guarantee period. This work should be performed during a time when the soil is dry, using a flat–bottomed shovel.

(C) Maintenance should occur at a minimum of once per month and as needed following significant rainfall events. Visually inspect the site for erosion, including inlet and outlet structures, embankments, side slopes, and check dams. Symptoms of erosion can include erosive gullies or areas of bare soil. Remove any litter directly covering and immediately upstream or downstream of inlets and outlets so that the drainage path is clear. The top of the mulch (jute mesh) (if any) should be at least two inches below the lowest point of the inlet/outlet to minimize blockage.

GI-5.09.5. MEASUREMENT AND PAYMENT

Unless otherwise provided for, no separate payment will be made for this work the cost of which shall be deemed to be included under other scheduled items, as appropriate.

SECTION GI-5.10
STONE COLUMN

GI-5.10.1 DESCRIPTION

Furnish and install stone columns as specified herein in accordance with the NYC Department of Environmental Protection Standard Design and Guidelines for Green Infrastructure Practices drawings and as directed by the Engineer.

GI-5.10.2 MATERIALS

(A) Open-graded stone shall comply with GI-2.07 – Clean Open Graded Stone.

(B) Pipe and fittings shall comply with GI-2.16A – PVC Pipe.

(C) Geotextile fabric shall comply with GI-2.09 DR – Geotextile Fabric For Drainage.

(D) Select granular fill material shall comply with Section 6.67 of the NYC Department of Transportation Standard Highway Specifications

GI-5.10.3 CONSTRUCTION METHODS

(A) The Contractor shall auger a fourteen (14) inch diameter casing a minimum of five (5) vertical feet into the permeable soil layer. The final depth of the stone column shall be determined by the Engineer but shall be no deeper than twenty (20) feet.

(B) The stone column shall consist of:

(1) Twelve (12) inch inside diameter perforated or slotted PVC pipe

a. The pipe length shall be determined by the Engineer.

(3) If needed, coupling to connect two segments of the perforated or slotted PVC pipe

(4) Twelve (12) inch round Column Cap shall be manufactured with perforations or slotted grate.

a. The top of the Stone Column Cap shall be below the interface of the Engineered Soil and Sand and the Stone Base.

ASTM D5208-14 "Standard Practice for Fluorescent Ultraviolet (UV) Exposure of Photodegradable Plastics"

ASTM D4329 "Standard Practice for Fluorescent Ultraviolet (UV) Lamp Apparatus Exposure of Plastics"

(C) Wrap geotextile fabric around the perforated or slotted PVC pipe

(D) Pull casing and use select granular fill to fill the annular space between the stone column pipe and the hole.

(E) Fully saturate stone column and surrounding fill. Once the fill is saturated, additional granular fill should be used to bring to grade. Saturate again and repeat as necessary.

(F) Fill the perforated or slotted PVC pipe with open-graded stone and seal with a perforated cap

(G) Space the stone columns in accordance with the Contract Drawings and as directed by the Engineer.

(H) Only install middle stone column within the 20'x 5' R.O.W. Bioswale only installed in a planting bed with no tree.

(I) During construction, keep the column free from foreign matter. The piping shall be left thoroughly clean to the satisfaction of the Engineer.

GI-5.10.4 MEASUREMENTS AND PAYMENT

The quantities to be measured for payment under these Items shall be the number of Vertical Feet of stone column installed to the satisfaction of the Engineer.

The price bid shall be a unit price per Vertical Feet of stone column installed as shown on the Contract Drawings and shall cover the cost of all labor, materials, equipment, insurance, and incidentals necessary to complete the work, including, but not limited to, auguring a fourteen (14") inch diameter temporary casing and its removal, furnishing and installing twelve (12") inch solid PVC pipe, twelve (12") inch diameter perforated pipe, PVC coupling(s), perforated cap, geotextile and fastening collar, select granular fill, and open graded stone; all in accordance with the Contract Drawings, the specifications and directions of the Engineer.

Payment will be made under:

Item No.	Item	Pay Unit
GI-5.10	STONE COLUMN	V.F.

SECTION GI-5.21
SAWCUTTING PAVEMENT

GI-5.21.1 DESCRIPTION

This section describes the full-depth sawcutting of both sidewalk and roadway pavements for the opening of pavements under other contract items.

GI-5.21.2 CONSTRUCTION METHODS

(A) SAWCUTTING OF PAVEMENTS

(1) The Contractor will be required to saw cut all asphaltic pavement; concrete pavement; asphaltic top course on concrete base pavement; and all other roadway pavements specified, or ordered as follows:

a. full-depth saw cuts of pavement along the initial opening limits of all trenches and excavations;

b. full-depth saw cuts of pavement along the edges of all trenches and excavations for cutbacks of trenches and excavations;

c. full-depth saw cuts of asphaltic top course along the edges of all trenches and excavations for cutbacks of asphaltic top course;

NOTE: A "FULL-DEPTH SAW CUT" shall be defined as the cutting of pavement by the use of a dust controlling water lubricated rotary blade concrete and pavement saw cutting machine. (Vermeer type cutting machines will not be permitted for use in order to make full-depth saw cuts.)

(2) The Contractor will be required to full-depth saw cut all sidewalks and curbs along the limits of all trenches and excavations or as directed by the Engineer.

(3) All saw cutting shall be done with approved power tool equipment.

(B) BREAKING EXISTING PAVEMENT

All pavements shall be initially opened as specified in Subsection GI-5.21.2. paragraphs (A)(1)(a) and (A)(2), above. Unless otherwise specified, the remainder of pavements between full depth saw cuts may be opened with hand-held "Jack" Hammers. The use of Hoe-Rams will not be permitted.

The area under construction shall be kept as clean and neat as possible and no material shall restrict water flow in gutter areas. These requirements shall be the responsibility of the Contractor.

(C) EXCAVATION OF PAVEMENTS

Excavation of roadway pavement will be paid for under Item 6.02 AAN; excavation of sidewalk pavement within the limits of the Green Infrastructure practice will be paid for under GI-4.02; excavation of sidewalk pavement outside the limits of the Green Infrastructure practice where new sidewalk is to be placed will be deemed included in the unit price bid for the new sidewalk; and, excavation of curbs will be deemed included in the unit price bid for the new curb construction.

All pavement removal shall be done in such a manner so as not to disturb the existing pavements outside the specified and ordered area of removal and restoration.

For the removal and restoration of brick or block pavements the edges of the pavement shall be toothed or racked back.

GI-5.21.3 MEASUREMENT

(A) SAWCUTTING EXISTING ROADWAY PAVEMENT

The quantity to be measured for payment shall be the number of linear feet of existing roadway pavement actually full depth sawcut to the satisfaction of the Engineer.

Also, no measurement for payment will be made for any partial depth of pavement sawcutting of bituminous pavement, the cost of which shall be deemed included in the price bid for this item.

(B) SAWCUTTING EXISTING SIDEWALK PAVEMENT

The quantity to be measured for payment shall be the number of linear feet of existing sidewalk pavement actually full depth sawcut to the satisfaction of the Engineer.

GI-5.21.4 PRICES TO COVER

(A) SAWCUTTING EXISTING ROADWAY PAVEMENT

The contract price bid per linear foot shall cover the cost of all labor, material, equipment, insurance, and incidentals necessary to full depth sawcut the existing roadway pavement, do all necessary chiseling, and do all other necessary incidental work, all in accordance with the Contract Drawings, the specifications and the directions of the Engineer.

The volume of roadway pavement excavated within the limits specified, or directed by the Engineer, will be paid for at the unit price bid for Item 6.02 AAN, Unclassified Excavation.

(B) SAWCUTTING EXISTING SIDEWALK PAVEMENT

The contract price bid per linear foot shall cover the cost of all labor, material, equipment, insurance, and incidentals necessary to full depth sawcut the existing sidewalk pavement, do all necessary chiseling, and do all other necessary incidental work, all in accordance with the Contract Drawings, the specifications and the directions of the Engineer.

The volume of sidewalk pavement excavated within the limits specified, or directed by the Engineer, will be paid for at the unit price bid for Item GI-4.02, Earth Excavation.

Payment will be made under:

Item No.	Item	Pay Unit
GI-5.21R	SAWCUTTING EXISTING ROADWAY PAVEMENT	L.F.
GI-5.21S	SAWCUTTING EXISTING SIDEWALK PAVEMENT	L.F.

SECTION GI-5.35
SLEEVE FOR UTILITY CROSSINGS

GI-5.35.1 DESCRIPTION

The Contractor shall furnish and install HDPE (High-Density Polyethylene) split sleeve pipes to protect utilities crossing Green Infrastructure practices. Each split sleeve pipe shall have a wire (not wire mesh) reinforced concrete collars on each side of the Green Infrastructure practice, as shown on the NYC Department of Environmental Protection STANDARD DESIGN AND GUIDELINES FOR GREEN INFRASTRUCTURE PRACTICES drawings.

Sleeve lengths shall range from six (6') feet to eight (8') feet depending on the width of the Green Infrastructure practice or at any given location it shall be two (2') feet greater than the width of the Green Infrastructure practice. This section describes the full-depth sawcutting of both sidewalk and roadway pavements for the opening of pavements under other contract items.

GI-5.35.2 MATERIALS

(C) HDPE SPLIT SLEEVE PIPE shall be of the diameter and length required as shown on the Contract Drawings or as directed by the Engineer. HDPE SPLIT SLEEVE PIPE shall comply with the requirements of Section GI-2.16.

(D) SEALING GASKET shall be as recommended by the manufacturer of the sleeve.

(E) CONCRETE shall be Type B-32 comply with the requirements of Sections 3.05 and 4.06 in the NYCDOT Standard Highway Specifications.

(F) WIRE REINFORCEMENT shall comply with the requirements of Sections 4.14 in NYC Department of Transportation Standard Highway Specifications. Size and spacing shall vary in accordance with the cross sectional area of the utility and as directed by the Engineer.

(G) MORTAR, if required for end capping, shall comply with the requirements of Section 3.07 in the NYC Department of Transportation Standard Highway Specifications, Type 1, Mortar, except that the proportions shall be one (1) part of cement to one and one-half (1-1/2) parts of sand and that the ingredients may be mixed by hand.

(H) WATERTIGHT EXPANDING FOAM SEALANT encasing the utilities in the split sleeve pipe shall be meet the requirements of ASTM C1620.

(I) PVC PIPES for the concrete piers supporting the concrete strip shall be of the diameter and length required as shown on the NYC Department of Environmental Protection Standard Design and Guidelines for Green Infrastructure Practices or as directed by the Engineer. PVC PIPE shall comply with the requirements of Section GI-2.16 A.

GI-5.35.3 METHODS

(A) Duct spacers shall be used to hold utilities in position to maintain a two (2") separation between the concrete utility duct and the HDPE sleeves when encasing utilities within the split sleeve pipe.

(B) The space between the utility and the sleeve shall be filled with watertight expanding foam sealant as directed by the Engineer.

(C) PVC pipe shall be used to form the concrete piers per the NYC Department of Environmental Protection STANDARD DESIGN AND GUIDELINES FOR GREEN INFRASTRUCTURE PRACTICES drawings.

(D) Immediately after the Engineer has inspected and approved the encasement, the HDPE Split Sleeve pipe shall be backfilled as per the appropriate items.

(E) Concreting shall comply with the requirements of Sections 3.05 and 4.06 of NYC Department of Transportation Standard Highway Specifications.

GI-5.35.4 DAMAGE TO UTILITY CROSSINGS

Any damage cause to the utility crossings during the construction or any cause whatsoever, whether in or out of the trench, shall be made good at the sole expense of the Contractor.

GI-5.35.5 MEASUREMENTS

The quantities to be measured for payment under these Items shall be the number of linear feet (laying length) of **SLEEVE FOR UTILITY CROSSINGS** actually laid in their final position, to the satisfaction of the Engineer, measured horizontally along the centerline of the HDPE Split Sleeve pipe.

GI-5.35.6 PRICE TO COVER

The price bid for each type of **SLEEVE FOR UTILITY CROSSINGS** shall be a unit price per linear foot and shall cover the cost of all labor, materials, equipment, insurance, and incidentals necessary to complete the work of furnishing and installing HDPE Sleeve of whatever diameter is required and shall include, but not be limited to, furnishing and installing sealing gasket, fittings, end caps, sealant, mortar, formwork, PVC pipe, supports, and connecting and joining pipe to other pipes or drainage structures; furnishing and placing concrete collars at each side of the Green Infrastructure practice; all in accordance with the Contract Drawings, the specifications and directions of the Engineer.

No additional payment will be made for excavation and backfilling.

Payment will be made under:

Item No.	Item	Pay Unit
GI-5.35	SLEEVE FOR UTILITY CROSSINGS	L.F.

SECTION GI-8.20
JUTE MESH

GI-8.20.1 INTENT

This section describes Jute Mesh. The Contractor shall furnish and place Jute Mesh as specified herein in accordance with the NYC Department of Environmental Protection Standard Design and Guidelines for Green Infrastructure Practices drawings and as directed by the Engineer.

GI-8.20.2 SUBMITTALS

The Contractor shall furnish two (2) labeled samples of the Jute Mesh intended for use in the work for approval and the Engineer's use. The label shall include the manufacturer's product name and the type of material. The Engineer reserves the right to reject on or after delivery any materials which do not, in his opinion, meet these specifications.

GI-8.20.3 MATERIALS

(A) Material Description:

(1) Jute mesh shall be a uniform, open, plain weave cloth of undyed and unbleached single jute yarn. Jute mesh shall be furnished in rolled strips.

(2) Wood Pegs: Shall be wedge shaped, approximately one inch by two inches by six inches (1" x 2" x 6").

(B) The width of the mesh shall be approximately forty-five (45) inches or as specified or approved. Mesh shall be woven as follows:

(1) Approximately 60 warp ends per yard of width;

(2) Approximately 40 weft ends per linear yard.

(3) Weight of Mesh shall be a minimum of 11 ounces per square yard (plus or minus 5%).

(4) This yarn shall be of a loosely twisted construction having an average twist of not less than 1.6 turns per inch and shall not vary in thickness by more than one-half its normal diameter.

(C) Smolder Resistance: The mesh shall be treated so as to be smolder resistant, meeting the following conditions:

(1) The cloth shall be made resistant to smoldering and/or after-glow by treatment with non-leaching and non-toxic chemicals. The chemicals must be non-toxic to vegetation and the germination of seed. The chemicals used for this purpose must resist leaching based on the equivalent of two inches of rain. The cloth itself shall bear some identification mark to differentiate it from untreated jute cloth.

(2) "Test Method" – When a lighted cigarette is placed on the upper or treated surface of the cloth, neither flame nor after-glow will proceed in any direction more than twelve

inches (12") from the original position of the cigarette after it has burned out completely.

GI-8.20.4 METHODS

Mulch shall be applied as a ground cover to the surface of all ROW Green Infrastructure Practices after the planting is completed. Mulch shall be applied to a uniform depth and shall be so distributed as to create a smooth, level cover. Mulch shall cut and placed within two (2) inches of tree and shrub stems. Plants shall not be covered.

Mulch shall be placed on topsoil and seeded areas as shown on the plans or where directed by the Engineer within areas without stretching so that it lays loosely on the soil and in contact with the soil at all points. The upper end of each roll of jute mesh shall be turned and buried to a depth of six (6) inches, with the soil.

Mulch shall be placed parallel to the slope and shall have a minimum lap of six (6) inches.

Jute mesh shall be held tightly to the soil by wood pegs driven firmly into the ground. Wood pegs shall be spaced not more than three (3) feet apart, along the sides of the jute mesh and not more than one (1) foot apart at roll ends or as determined by the Engineer.

MAINTENANCE: The Contractor shall maintain the areas of jute mesh installation until final acceptance of the contract. Maintenance shall consist of providing protection of jute mesh and the repair of areas damaged by equipment, erosion, fire, or other causes, to re-establish the grade and conditions of the area as specified.

GI-8.20.5 MEASUREMENT

The quantity of JUTE MESH to be paid for under this item shall be the number of SQUARE YARDS actually installed at the site to the satisfaction of the Engineer.

GI-8.20.6 PRICE TO COVER

The price bid shall be a unit price per SQUARE YARD of JUTE MESH and shall include the cost of all labor, materials, equipment, insurance, and incidentals necessary to complete the work; all in accordance with the Contract Drawings, the specifications and the directions of the Engineer.

Payment will be made under:

Item No.	Item	Pay Unit
GI-8.20	JUTE MESH	S.Y.

SECTION GI-9.30
(NOT A PAY ITEM)
TEMPORARY CLOSURE AND PROTECTION OF ROW GI PRACTICE

GI-9.30.1 INTENT

This section describes requirements for the temporary closure of a Right-of-Way Green Infrastructure (ROW GI) Practice. The Contractor shall furnish, install, maintain, and remove sand bags, tarps, and other materials as necessary to temporarily close and protect the ROW GI Practice from construction debris and/or storm water when directed by the Engineer.

GI-9.30.2 MATERIALS

The Contractor shall have the following materials readily and sufficiently available: Engineered Soil and Sand, Sandbags, and Plastic Tarp.

(A) ENGINEERED SOIL AND SAND

a. Provide Engineered Soil and Sand as specified in GI-2.13 herein. Cost of Engineered Soil and Sand shall be deemed included in the price of this ITEM NO.GI-9.30.

(B) SANDBAG

a. Provide woven sandbags made of polypropylene, polyethylene, or polyamide material approximately 18 to 24 inches in length, 12 to 18 inches in width, and 6" to 8" thick, tightly packed 50 to 125 pounds in weight. Cost of SANDBAG shall be deemed included in the price of this ITEM NO.GI-9.30.

(C) PLASTIC TARP

Provide water proof and tear resistant poly tarp, with a minimum thickness of 6 mils. Cost of PLASTIC TARP shall be deemed included in the price of this ITEM NO.GI-9.30

GI-9.30.3 METHOD

Contractor shall take appropriate measures to temporarily close and protect the ROW GI Practice and prevent construction debris and/or stormwater flow from entering. Measures shall include, but are not limited to:

(A) Placing sandbags at inlets and outlets of ROW GI Practice.

(B) Placing plastic tarps to cover shrubs and steel tree guards. Then placing sandbags around ROW GI Practice to sufficiently secure tarps in place. If tree is present, tree will be allowed to protrude through the tarp cover.

GI-9.30.4 MAINTENANCE AND REMOVAL

The ROW GI Practice will remain closed and materials will remain in place and maintained and shall be removed, as directed by the Engineer.

GI-9.30.5 CONTRACTOR'S LIABILITY

The Contractor shall be liable for any construction debris and/or storm water discharge that in view of the Engineer either causes or contributes in infiltrating the ROW GI Practice.

In the event that pollutants (debris and/or storm water) are discharged to the storm water system due to the Contractor's negligence, the Engineer will direct the Contractor to cease any or all construction activities contributing to the release of these pollutants. The Contractor shall be held responsible, at his own cost, for any and all necessary actions to remedy the damage.

GI-9.30.6 MEASUREMENT AND PAYMENT

No separate payment will be made for this work, the cost of which shall be deemed to be included under all scheduled items.

SECTION GM-11
HAND AND/OR PNEUMATIC EXCAVATION

GM-11.1 DESCRIPTION

Under this Item, the Contractor shall perform HAND AND/OR PNEUMATIC EXCAVATION in accordance with the plans, specifications, and directions of the Engineer.

GM-11.2 INTENT

The intent of the item is to either hand excavate or excavate with a pneumatic air device in areas where trenching or other excavation, such as removal of pavement is required or as directed by the Engineer. This section is intended for, but not limited to, test pit and/or excavation within the drip line of existing trees. These are areas, where in the opinion of the Engineer, use of a backhoe or tractor would not be appropriate.

GM-11.3 CONSTRUCTION METHOD

Prior to beginning work, the area to be trenched/excavated shall be thoroughly wetted to minimize dust to the greatest extent possible. Trenching/Excavation shall be accomplished either by hand or with a pneumatic device such as an Air-Spade® CGP System, as manufactured by Concept Engineering Group, Inc. Verona, PA, or approved equal. The Contractor shall provide a compressor unit for operating the pneumatic excavator rated at one hundred fifty standard cubic feet per minute (150 scfm) at ninety pounds per square foot gauge (90 psfg). All pneumatic excavation shall be as minimal as possible in width and depth, thereby minimizing the impact on tree roots and other areas where the Engineer determines that conventional machine excavation may be detrimental. Different nozzles may be used on the air spade to expedite the work or minimize the amount of airborne material. Depth shall be as indicated on Contract Drawings or as directed by the Engineer. Depths greater than 18" shall require removal of soil by hand shovel, or other appropriate means. Where a pneumatic device is used, care shall be taken to avoid rocks being scattered and inadvertently damaging private or public property. In addition, operators must be equipped with adequate protective clothing and gear, in accordance with manufacturer's recommendations.

HAND REMOVAL OF PAVEMENTS

A. The intent of the item is to break up and carefully remove pavements with a pneumatic (jack) hammer in areas where trenching or other excavation is required within the critical root zone of existing trees and/or sensitive areas. These are areas, where in the opinion of the Tree Consultant use of a backhoe or tractor would not be appropriate.

B. All unit masonry foundations such as brick and concrete block, and all other materials which can be removed with equipment performing normal excavation operations, will be excluded from this item. This Work will be paid for under the bid sheet item "Unclassified Excavation".

C. The Contractor shall verify all dimensions and conditions in the field and shall be responsible for the same. The Contractor shall demolish and carefully remove pavements as indicated on the plans and as directed by the Tree Consultant.

D. All material shall be removed from the Site at no additional cost to the City.

E. In the event the Contractor encounters any utilities or services during the performance of the Work, he shall notify the City Department or Utility Company owning or controlling such services for appropriate cutoff or repairs. Any service cutoff or interruption by the Contractor shall be restored at the Contractor's expense.

HAND EXCAVATION

A. The intent of the item is to either hand excavate in areas where trenching or other excavation is required within the drip line or critical root zone of existing trees and/or sensitive areas. These are areas, where in the opinion of the Tree Consultant shall use of a backhoe or tractor would not be appropriate.

GM-11.4 SUBMITTALS

All submittals shall be in accordance with the procedures in the General Conditions of Section 1.06.31. of the NYC Department of Transportation Standard Highway Specifications.

The Contractor shall submit in advance the proposed method of excavation performed under this item. If a device other than the Air-Spade® is proposed, all product literature shall be submitted for review.

GM-11.5 MEASUREMENT AND PAYMENT

The quantity of HAND AND/OR PNEUMATIC EXCAVATION to be paid for under this Item shall be the number of CUBIC YARDS of material excavated and backfilled, as measured in its original position, in accordance with the plans, specifications, and directions of the Engineer.

The price bid shall be a unit price per CUBIC YARD of Hand And/Or Pneumatic Excavation and shall include the cost of all labor, materials, equipment, and insurance necessary, including compressor and backfilling, in accordance with the plans and specifications, to the satisfaction of the Engineer.

Payment will be made under:

Item No.	Item	Pay Unit
GM-11	HAND AND/OR PNEUMATIC EXCAVATION	C.Y.

SECTION P-1
PHOTO DOCUMENTATION

P-1.1 GENERAL REQUIREMENTS

The Contractor shall engage the services of an experienced professional photographer, approved by the City, to take color job photographs. The photographer will be required to take pre-construction, construction and post-construction photographs of the work as directed by the Engineer.

(A) Pre-Construction Photographs

The photographer shall visit the site prior to start of construction to take a total of five (5) photographs per Green Infrastructure Practice asset showing existing condition of the Green Infrastructure Practice site and any adjacent areas which could possibly be disturbed during construction.

(B) Construction Photographs

The photographer shall visit the site before the clean open graded stone is placed and take five (5) photographs per Green Infrastructure Practice asset to show the work in progress, and any adjacent areas which were disturbed during construction.

(C) Post-Construction Photographs

The photographer shall visit the site at the completion of construction to take a total of five (5) photographs showing the completed work and any adjacent areas which were disturbed during construction.

P-1.2 PRODUCTS

(A) Photographs

(1) For the purposes of this Section, a photograph shall be defined as one (1) exposure.

(2) Three (3) color 8" x 10" (or 8-1/2" x 11") glossy prints of each photograph shall be submitted to the Engineer. Digital images shall be submitted along with the color glossy prints. The prints shall have indelibly printed on their reverse side the information listed below. The same information shall be printed on a sheet of paper in a clear sleeve to be included in the binder holding the prints, slides, and CD-Rs.

a. Green Infrastructure Practice Number.

b. Project number.

c. Project name.

d. Contract number and description.

e. Photo number.

f. Date picture was taken.

g. View and description, indicating location of camera, general description of what photograph represents and whether this is a pre-construction, construction or post-construction photograph. (A plot plan shall be submitted by the Contractor indicating location and photo number of all photographs.) The Contractor shall transmit one print of each photo to the Engineer for use in preparing descriptions. The photos with descriptions will be returned to the Contractor for printing description, mounting, etc.

h. Name of photographer.

i. Engineer or Engineer's Representative.

(3) The Engineer will accompany the photographer for the taking of all photographs.

(4) The Contractor shall furnish hard-back binders to hold the three (3) sets of prints and the digital images. The binders, print, and digital images shall meet the requirements of ISO 18902:2001 "Imaging materials -- Processed photographic films, plates and papers -- Filing enclosures and storage containers".

(5) Digital photographs shall be created, indexed and transferred to the Department of Environmental Protection in accordance with the requirements of Section R-1.17, 'Records in Electronic Formats'. The Contractor shall provide the Engineer with updated images on a monthly basis.

P-1.3 EXECUTION

(A) Use Of Photographs

(1) All photographs, slides, prints and negatives, resulting from the work under this Contract, shall become the property of the City upon their approval by the Engineer and may be used in whole or in part and in such manner or for such purpose as the City may desire, without any additional compensation to the Contractor or photographer.

(2) All photographs, aerials, slides, prints, negatives, reports, documents, data, or other materials produced pursuant to this Agreement ("Copyrightable Materials") shall be considered "work-made-for-hire" within the meaning and purview of Section 101 of the United States Copyright Act, 17 U.S.C. '101, and the City shall be the copyright owner thereof and of all aspects, elements and components thereof in which copyright protection might subsist. To the extent that the Copyrightable Materials do not qualify as "work-made-for-hire," the Contractor and the photographer hereby irrevocably transfer, assign and convey exclusive copyright ownership in and to the Copyrightable Materials to the City, free and clear of any liens, claims, or other encumbrances. Neither the Contractor nor the photographer shall retain any rights pertaining to the Copyrightable Materials, including any copyright or intellectual property interests, nor shall they reproduce, publish, disseminate or otherwise use any of the Copyrightable Materials without the prior written approval of the City.

(3) The Contractor and the photographer acknowledge that the City may, in its sole discretion, register copyright in the Copyrightable Materials with the U.S. Copyright Office or any other

government agency authorized to grant copyright registrations. The Contractor and the photographer shall cooperate in this effort, and agree to provide any further documentation necessary to accomplish this.

The Contractor shall not retain any copy of any photograph taken for this project unless he specifically requests and receives written approval from the Engineer who in consultation with NYC Department of Environmental Protection shall allow the Contractor to retain specific construction photographs. The request for approval shall be processed through the Resident Engineer. The Contractor shall not request or procure copies for his use of any photograph from the photographer without this written approval

P-1.4 DIGITAL PHOTOGRAPHS

(A) The file format for digital photographs is Tagged Image File Format (TIFF).

(B) Photographic (raster) images may be produced directly by digital cameras or indirectly by scanning silver-gelatin images (film or prints). If the digital photographic images are produced indirectly by scanning silver-gelatin images, the preferred source is the silver-gelatin film image (whether negative or reversal) rather than prints made from that film image.

(C) Digital cameras and scanners shall produce records with true optical resolution. Images shall not be resized or interpolated to a higher resolution from a lower resolution.

(D) Photographic images shall be provided as continuous-tone (8-bit) gray scale or color (24-bit or 48-bit RGB) raster images.

(E) Digital camera files shall be captured as 6 megapixel files or greater with a minimum pixel array of 3,000 pixels by 2,000 pixels. Photographic images produced at this resolution and size is comparable in quality to 35-mm film photographs.

(F) Scanned photographs shall be produced as minimum 3,000 line files to approximate a 6 megapixel file according to the following image size and resolution guidelines. Photographic images conforming to these guidelines will be comparable in quality to 35-mm film photographs. Scan an 8" x 10" original (print, slide or negative) at 300 dpi to produce a file that is 2,400 x 3,000 pixels. Scan a 4" x 5" original (print, slide or negative) at 600 dpi to produce a file that is 2,400 x 3,000 pixels. Scan a 35-mm original (print, slide or negative) at 2100 dpi to produce a file that is 2,000 x 3,000 pixels.

(G) Quality control in the scanning process shall follow the practices established in ANSI/AIIM MS44 "Recommended Practice for Quality Control of Image Scanning" and ANSI/AIIM TR34 "Sampling Procedures for Inspection by Attributes of Images in Electronic Image Management and Micrographic Systems". The sampling rates for each type of quality control (visual and printed) shall be established by the Engineer in consultation with NYC Department of Environmental Protection. The production contractor shall supply a description of the quality control inspection performed as part of the scanning process and a report on the results of the last inspection performed on the images and the date of that inspection.

P-1.5 PAYMENT

(A) All costs associated with this Section shall be included as specified in the Measurement and Payment section of the Contract. The Contractor shall produce one Set of photographs for each Green Infrastructure practice asset.

(B) A Set of photographs includes all Pre-Construction, Construction and Post-Construction Photographs as required in this section.

(C) Should more than the specified number of photographs be required, the Contractor will be paid at a negotiated price for each photograph over the specified number requested in writing by the Engineer.

(D) The Engineer reserves the right to reject any photograph that is not clear or definitive. Any photograph so rejected shall be subtracted from the total exposures before computations for payment or credit under this Section.

P-1.6 MEASUREMENT AND PAYMENT

The quantity to be measured for payment will be the number of SETS of Photographs furnished by the Contractor, to the satisfaction of the Engineer.

The contract price bid per set shall cover the cost of furnishing all labor, materials, plant, equipment, insurance, and necessary incidentals required to completing the work including, but not limited to, the cost of the photographer, photograph binders, and digital photographs; all in accordance with the specifications and the directions of the Engineer.

Payment will be made under:

Item No.	Item	Pay Unit
P-1	PHOTO DOCUMENTATION	SETS

SECTION PM-01 through PM-24
TREES, SHRUBS, WOODY AND HERBACEOUS PLANT MATERIAL

PM.1 INTENT

This section describes woody and herbaceous plant material.

PM.2 KIND

Plant names, size, and grading standards shall conform to those prepared by the American Association of Nurserymen Horticultural Standards, 2014 Edition, unless otherwise specified. No substitution shall be permitted, except with the written permission of the Engineer in consultation with the NYC Department of Parks and Recreation Green Infrastructure Liaison.

PM.3 QUALITY

(A) All plants shall be typical of their species or variety. They shall have normal, well-developed branches and vigorous fibrous root systems. They shall be sound, healthy, vigorous plants free from defects, disfiguring knots, sun scald injuries, dead or broken branches, abrasions of the bark, plant diseases, insect eggs, borers, and all forms of infestation and weeds. All plant material shall be tagged by the Engineer before the purchase or use of any such material.

(B) All plants shall be nursery-grown, unless otherwise stated. All shrubs shall have been growing under similar climatic conditions as the locations of this project for at least two (2) years prior to the date of the contract. Plants held in storage will be rejected if they show signs of growth during storage. Collected plants shall be taken from a subgrade favorable to good root development. All collected material shall be clean sound stock, free from decaying stumps.

(C) Herbaceous plants, vines, and groundcover shall be vigorous healthy plants, a minimum two (2) years old, from cuttings, seed, or division, with well-developed root systems and crowns, as specified in the Plant Schedule. Bulbs, corms, tubers and rhizomes shall be firm, non-desiccated, and certified free of disease and viral infection, of the sizes, grades, and varieties indicated in the Plant Schedule.

PM.4 PLANT SOURCES FOR NATIVE PLANTS ONLY, WHERE APPLICABLE

Native plant stock must be used when specified on designs and should be used whenever possible and appropriate. Native plant material must be derived from the local genotypes of the native plants specified. For purposes of this native plant material paragraph, "local" shall mean within 250 miles from the planting site. However, a reasonable effort shall be made to obtain sources of plant material as close to the planting site as possible. All plants must have been grown in a hardiness zone no warmer than Zone 7 or colder than Zone 5 as determined by the USDA Agricultural Research Service, Plant Hardiness Zone Map. Plant quality shall be typical of their species. Plant material should exhibit the range of variation typical of local genotypes of the species as determined by the Engineer. They shall have normal branching and vigorous fibrous root systems. They shall be sound, healthy plants, free from sunscald injuries, or other mechanical injury, plant diseases, insect eggs, borers and all forms of infestations. All plants shall be nursery grown unless otherwise stated. Collected material will not be accepted. Except as may otherwise be specified in this native plant material

paragraph, all other sections of this Plant Material specification shall also apply to the Native Plants. The native plant material, subject to availability and adherence to the requirements of this paragraph, may be purchased from the following nurseries or approved equal nurseries:

Greenbelt Native Plant Center, Staten Island, NY

Pineland's Nursery, Columbus, NJ

Wild Earth, Freehold, NJ

Sylva Native, Glen Rock, PA

PM.5 ORDERING PLANT MATERIALS

The Contractor shall notify the Engineer of the unavailability of any tree, shrub, herbaceous plant, or bulb species designated in the contract, as well as provide confirmation to the Engineer of all orders from all sources of supply. Any request for species substitution due to unavailability must be submitted in writing to the Engineer, within fifteen (15) days of the award of contract. The Contractor must include the names and addresses of at least ten (10) nurseries they have contacted in an effort to locate these species, and the list shall be submitted to the Engineer. All nurseries supplying material shall be required to have a registration certificate from the Department of Agriculture and Markets, Division of Plant Industry, New York, or any other state where plant material is obtained, certifying that plant material is apparently free of injurious insects and diseases.

PM.6 CHEMICAL AND PHYSICAL REQUIREMENTS

(A) Plant material shall be as shown on the Tree Planting Schedule as shown on the Contract Drawings. Where applicable, the Contractor shall provide freshly dug plant material. Cold storage or previously dug plants will not be acceptable. The Contractor shall not prune prior to delivery unless otherwise directed and approved by the Engineer or representative. Plants that are pruned without authorization from the Engineer will be rejected. Plant material shall be delivered to the site in such a manner as to not damage the bark, break branches, or destroy the natural shape of the plant. To protect plant material from desiccation, the Contractor shall when deemed appropriate and only on appropriate plant material, apply an approved anti-desiccant 48 hours prior to transporting and fully cover plant material during transportation to the planting site. Plant material shall not be dropped or in any way be mishandled during unloading. Plants damaged during transportation to the site will be immediately rejected. Unacceptable conditions shall include, but not be limited to, the following: loose burlap or rope, soil spilling from B&B or containers, plants that move independently of root ball or container, soil missing from B&B or containers, and irregularly shaped root balls.

(B) <u>ASIAN LONGHORNED BEETLE QUARANTINE ZONE REGULATIONS:</u> Due to current Federal, State and NYC DPR policy, the following host species may not be planted in the quarantine zone. Host species are as follows: Acer-Maple, Aesculus-Horsechestnut/Buckeye, Salix-Willow, Betula-Birch, Populus-Poplar, Ulmus-Elm, Albiza-Mimosa/Silk Tree, Celtis-Hackberry, Fraxinus-Ash, Platanus-London Planetree, Sycamore, Sorbus-Mountain Ash.

In addition, Nurseries located within the quarantine zone shall comply with State and Federal Law and all Contractors and/or Subcontractors shall be Certified by the New York State Department of Agriculture and Markets to perform work within the Quarantine Zone. For additional information, including the extent of the quarantine zone, see the NYC Department

of Transportation, Standard Highway Specifications, General Conditions, Subsection 1.06.23.(R), "PLANT PEST CONTROL REQUIREMENTS".

(C) A plant shall be dimensioned as it stands in its natural position. Trees up to and including four (4) inch caliper size shall be measured six (6) inches above ground level. Trees over four (4) inches in caliper size shall be measured twelve (12) inches above ground level. Stock furnished shall be a fair average of the minimum and maximum sizes specified. Larger plants cut back to sizes specified will not be accepted.

Container grown herbaceous plants, groundcover, and vines shall be well rooted in the container size indicated on the Plant Schedule, grown in the container at least one year prior to planting. Bulbs, corms, tubers and rhizomes shall be Top Size, or as indicated on the Plant Schedule. Annual flowering plants shall be vigorous, well rooted, with no indications of disease or stress.

(D) Preparation of Plants

All precautions customary in good trade practice shall be taken in preparing plants for moving. Workmanship that fails to meet the highest standards will be rejected. All plants shall be dug immediately before moving unless otherwise specified. All plants shall be dug to retain as many fibrous roots as possible. Balled and burlapped and balled and platformed plants shall have a solid ball of earth of minimum specified size, securely held in place by burlap and stout rope or twine. Oversized or exceptionally heavy plants are acceptable if the size of the ball or spread of roots is proportionately increased, to the satisfaction of the Engineer. Loose, broken, or manufactured balls will be rejected. Bare root plants shall be puddled immediately after digging by immersing the roots in a hydrogel slurry, so as to completely coat the roots.

(E) Delivery

Plants shall be packed, transported, and handled with utmost care to insure adequate protection against injury. When transported in closed vehicles, plants shall receive adequate ventilation to prevent sweating. When transported in open vehicles, plants shall be protected by tarpaulins or other suitable cover material. All bare root plants shall be adequately protected from drying out and immediately after inspection shall be heeled in moist soil. Balled and burlapped plants shall be set on the ground and the ball covered with soil. Until planted, all material shall be properly maintained and kept adequately moist, to the satisfaction of the Engineer.

(F) Inspection

Inspection may be made before digging if the Engineer directs, but no plant material shall be planted by the Contractor until inspected by the Engineer at the site of the work. Plant material will be rejected if delivered with broken or damaged root balls, or if damaged on site by rough handling. All rejected material shall be immediately removed from the site and replaced with acceptable material at no additional cost. Final inspection shall be made upon completion of the contract.

PM.7 PLANT SCHEDULE

(A) ABBREVIATIONS

Cal.	Indicates the caliper of the trunk of the tree.
B & B	Indicates tree or shrub to be balled and burlapped.
B.R.	Indicates a tree or shrub to be delivered "bare root".
O.C.	Indicates "on center" or spacing between plants in all directions.
Ht.	Indicates overall height of tree.
Item No.	Indicates specific species of plant material, including a description.

(B) Genus species & Plant description.

TREES: All trees shall be branched 6' from the ground. No tree shall have any limb cuts over 3/4" which have not completely calloused over. Sizes shall be as indicated.

All B&B trees shall be dug with firm root balls free of noxious weeds. There should be no excess soil on top of the root ball or around the trunk. Loose, broken, or manufactured balls will be rejected. Well-branched top and fibrous root system essential.

SHRUBS: Sizes shall be as indicated. Rootball or container sizes shall correspond to A.A.N. Standards for the corresponding shrub height. Heavy root system, all shrubs shall be well branched to the ground. Sizes shall be as indicated.

VINES, GROUNDCOVER, AND HERBACEOUS PLANTS: Container size shall be as indicated on the plans. All plants shall have vigorous root systems and have grown in the container for at least one year prior to planting.

PLUGS: Plugs shall have vigorous root systems.

ANNUALS: Annual flowering plants shall be vigorous, well rooted, with no indications of disease or stress.

BULBS, CORMS, TUBERS AND RHIZOMES: All bulbs, corms, tubers and rhizomes shall be top size, firm, and non-desiccated.

ROSES: Sizes shall be as indicated. Heavy root system, all roses shall be well branched to the ground.

Items are listed by estimated size and/or shared similarities; they include—but shall not be limited to—the genus and species listed beneath each item.

(1) PLANT MAJOR TREES – 2½" – 3" CALIPER

Acer rubrum, Red Maple: 2½" – 3" cal. B&B with 28" - 32" rootball, branched 6' from the ground. Should have single, straight trunk with leader intact, and symmetrical well branched tops.

Betula nigra, River Birch: 2½" – 3" cal. B&B with 28" - 32" rootball, branched 6' from the ground, spread of top 6'. Should have a single straight trunk.

Carpinus betulus, European Hornbeam: 2½" – 3" cal. B&B with 28" - 32" rootball, branched 6' from the ground, spread of top 5'-6'. Should have single, straight leader.

Celtis occidentalis, Hackberry: 2½" – 3" cal. B&B with 28" - 32" rootball, branched 6' from ground. Should have straight trunk w/symmetrical well branched top, spread of 5'-6'.

Crataegus viridis 'Winter King', 'Winter King' Green Hawthorn: 2½" – 3" cal. B&B with 28" - 32"" rootball, branched 6' from the ground, spread of top 6'. Should have a single straight trunk.

Eucommia ulmoides, Hardy Rubber Tree: 2½" – 3" cal. B&B with 28" - 32" rootball, branched 6' from ground. Should have straight trunk with symmetrical and somewhat pyramidal, well branched top.

Ginkgo biloba, Ginkgo: 2½" – 3" cal. B&B with 28" - 32" rootball Branched 6' from ground. Single straight trunk with leader intact, symmetrical well branched tops. Trees with unbalanced tops not acceptable. Spread of top 3'-4'. Staminate form only.

Gleditsia triacanthos var inermis, Honey locust: 2½" – 3" cal. B&B with 28" - 32" rootball branched 6' from ground. Spread of top 4'-5'. Shall have straight trunks and picturesque, well branched tops.

Gymnocladus dioicus, Kentucky Coffeetree: 2½" – 3" cal. B&B with 28" - 32" rootball branched 6' from ground. Single straight trunk with leader intact, symmetrical well branched tops.

Koelreuteria paniculata, Goldenrain Tree: 2½" – 3" cal. B&B with 28" - 32" rootball, branched 6' from ground. Should have single straight trunks with leaders intact, and symmetrical well branched tops.

Liquidambar styraciflua, Sweetgum: 2½" – 3" cal. B&B with 28" - 32" rootball, branched 6' from ground. Should have single straight trunks, leader intact, well branched tops.

Metasequoia glyptostroboides, Dawn Redwood: 2½" – 3" cal. B&B with 28" - 32"" rootball, branched 6' from ground. Single straight trunk, pyramidal form and leader intact.

Nyssa sylvatica, Black Gum: 2½" – 3" cal. B&B with 28" - 32" rootball, branched 6' from ground. Should have single straight trunks with leader intact. Well branched tops.

Platanus X acerifolia , London Plane Tree: 2½" – 3" cal. B&B with 28" - 32" rootball, branched 6' from ground. Shall have single straight trunks with leader intact, symmetrical well branched tops. No cut back trees.

Quercus acutissima, Sawtooth Oak: 2½" – 3" cal. B&B with 28" - 32" rootball, branched 6' from ground. Spread of top 4'-5'.

Quercus bicolor, Swamp White Oak: 2½" – 3" cal. B&B with 28" - 32" rootball, branched 6' from ground. Spread of top 4'-5'.

Quercus imbricaria, Shingle Oak: 2½" – 3" cal. B&B with 28" - 32" rootball, branched 6' from ground. Spread of top 4'-5'.

Quercus macrocarpa, Bur Oak: 2½" – 3" cal. B&B with 28" - 32" rootball, branched 6' from ground. Spread of top 4'-5'.

Quercus palustris, Pin Oak: 2½" – 3" cal. B&B with 28" - 32" rootball, branched 6' from ground. Spread of top 4'-5'.

Quercus phellos, Willow Oak: 2½" – 3" cal. B&B with 28" - 32" rootball, branched 6' from ground. Spread of top 4'-5'.

Quercus robur, English Oak: 2½" – 3" cal. B&B with 28" - 32" rootball, branched 6' from ground. Spread of top 4'-5'.

Quercus robur 'Fastigiata', Columnar English Oak: 2½" – 3" cal. B&B with 28" - 32" rootball, fully branched.

Quercus rubra, Red Oak: 2½" – 3" cal. B&B with 28" - 32" rootball, branched 6' - 7' from ground. Spread of top 4'- 5'.

Taxodium distichum, Bald Cypress: 6'-8'. B&B with 26-28" rootball. Should have single straight trunk, vigorous growth with pyramidal form and single, straight leader intact.

Taxodium distichum var. nutans, Pond Cypress: 6'-8'. B&B with 26-28" rootball. Should have single straight trunk, vigorous growth with pyramidal form and single, straight leader intact.

Ulmus spp. ('Jefferson', 'New Harmony', 'Valley Forge', 'Princeton', 'Homestead', 'Pioneer', 'Delaware'), American Elm 2½" – 3" cal. B&B with 26-28" rootball, branched 6' from ground. Straight trunk with leader intact, well branched tops.

Ulmus parvifolia, Lacebark Elm: 2½" – 3" cal. B&B with 26-28" rootball, branched 6' from ground, spread of top 5'-6', straight trunk with symmetrical, well branched tops, must be free from bad crotches and other structural faults, shall be free from scale, Dutch Elm disease and all other infestation.

Zelkova serrata, Japanese Zelkova: 2½" – 3" cal. B&B with 26-28" rootball, branched 6' from ground, spread of top 4'-5'.

(2) PLANT FLOWERING AND ORNAMENTAL TREES

Amelanchier arborea, Downy Serviceberry: 8'-10' Ht., B&B, 20" rootball, spread of top 5'-6'.

Amelanchier canadensis, Shadblow: 2½" - 3" cal. B&B with 26-28" rootball, branched 6' from the ground, average height 8'-10', spread of top 5'-6'. Should have single, straight leader. Provide multi-stemmed specimens if requested. Multi-stemmed trees shall have a minimum of 4 main stems and be a minimum height of 4'.

Amelanchier x grandiflora 'Autumn Brilliance', 'Robin Hill', Apple Serviceberry: 2½" – 3" cal. B&B with 26-28" rootball, branched 6' from the ground, average height 8'-10', spread of top 5'-6'. Should have single, straight leader. Provide multi-stemmed specimens if requested. Multi-stemmed trees shall have a minimum of 4 main stems and be a minimum height of 4'.

Amelanchier laevis 'Snowcloud', Snowcloud Serviceberry: 8'-10' Ht., B&B, 20" rootball, spread of top 5'-6'.

Cercis canadensis, 'Alba''Forest Pansy', Eastern Redbud: 2½" – 3" cal. B&B with 26-28" rootball, branched 6'-7' from ground, average height 12'-14', spread of 4'-5', well branched. Should have straight trunk with leader intact. No limb cuts over 3/4' which have not completely calloused over. Heavy fibrous root system essential. Supply multi-stemmed if specified. Multi-stemmed shall be a minimum of 6'.

Chionanthus retusus, Chinese Fringetree: 2½" – 3" cal., B&B, 22" rootball, well branched, spread of top 5'.

Chionanthus virginicus, White Fringetree: 5'-6' Ht., B&B, 16"-18" rootball, well branched, spread of top 5'.

Cornus kousa, Korean Dogwood: 8'- 10' Ht., B&B, 20" rootball, well branched, spread of top 5'

Cornus mas, Cornelian Dogwood: 2½" – 3" cal. B&B with 26-28" rootball, spread of top 5'-6'. Should have single, straight leader.

Halesia caroliniana/Halesia tetraptera, Carolina Silverbell: 2½" – 3" cal. B&B with 26-28" rootball branched 6' from the ground, spread of top 5'-6'. Should have a single straight trunk. Specimen quality.

Hamamelis x intermedia, Hamamelis Intermedia Witchhazel: 4'-4.5' Ht., B&B, 14" rootball, spread of top 4', specimen quality.

Maackia amurensis, Amur Maackia: 2½" – 3" cal. B&B with 26-28" rootball, branched 5' from ground. Should have single straight trunks with leaders intact, and symmetrical well branched tops.

Magnolia virginiana, Sweetbay Magnolia: 8'- 10' Ht., B&B, 20" rootball, well branched, spread of top 5'. Provide multi-stemmed specimens if requested. Multi-stemmed trees shall have a minimum of 4 main stems and be a minimum height of 6'.

Malus sargentii, Crabapple: 5-6' Ht., B&B, 18" rootball, heavy plant, well furnished to ground, spread equal to height.

Prunus sargentii, Sargent Cherry: 2½" – 3" cal. B&B with 26-28" rootball. Shall have a single straight trunk with symmetrical well branched top.

Prunus serrulata 'Kwanzan', Kwanzan Cherry: 2½" – 3" cal. B&B with 26-28" rootball. Shall have a single straight trunk with symmetrical well branched top.

(3) MEDIUM DECIDUOUS SHRUBS – CLASS B

Aronia arbutifolia, Red Chokeberry: 24-36" Ht., #3 can., heavy well-branched tops.

Aronia melanocarpa, Black Chokeberry: 24-36" Ht., #3 can., heavy well-branched tops.

Callicarpa spp., Beautyberry: 24-36" Ht., #3 can, heavy well-branched tops.

Clethra alnifolia, Summersweet Clethra: 24-36" Ht., #3 can., heavy well branched tops with at least 8 canes 24" and up.

Cornus sericea, Redtwig Dogwood: 24-36" H, #3 can, heavy, well-branched tops.

Cotoneaster apiculatus, Cranberry Cotoneaster: 18-24" Ht., #3 can. with at least 5 runners. Must be well established in pot.

Cotoneaster horizontalis, Rockspray Cotoneaster: 18-24" Ht., #3 can.

Forsythia x intermedia, Showy Border Forsynthia: 18-24" Ht., #3 can., full, well-branched head with at least 4 canes.

Fothergilla gardenii, Dwarf Fothergilla: 18-24" Ht., #3 can, heavy well branched top.

Hamamelis vernalis, Vernal Witchhazel: 24-36" Ht., #3 can, Heavy well-branched top.

Hamamelis virginiana, Witchhazel: 24-36" Ht., #3 can, heavy well branched top.

Hydrangea quercifolia, Oakleaf Hydrangea: 24-36" Ht., #3 can., well-branched top with at least 4 canes 24" and up.

Ilex verticillata, Winterberry: 24-36" Ht., B&B or #3 can., heavy symmetrical top, furnished to the ground, spread of top 15".

Itea virginica, Virginia Sweetspire: 18-24" Ht., #3 can., well-branched top with at least 4 canes.

Lindera benzoin, Spicebush: 24-30" Ht., #3 can, well branched top with at least 4 canes 20" and up.

Myrica pennsylvanica, Northern Bayberry: 24-36" Ht., B&B or #3 can, well-branched, spread of top 18".

Physocarpos opuifolius, Common Ninebark: 2-3 H, #3 can, well branched, must have at least 4 canes, 24" and up; 'Diablo' where specified.

Potentilla fruticosa, Shrubby Cinquefoil: 12-18" Ht., #3 can, spread of top 18", must have at least 4 canes 12" and up.

Rhus aromatica 'Gro-Low', Gro-Low Fragrant Sumac: 18-24" Spread. #3 can, well branched.

Spirea japonica, Japanese Spirea: 18-24" Ht., #3 can., well-branched top with at least 4 canes 18" and up.

Spirea nipponica 'Snowmound', Snowmound Nippon Spirea: 18-24" Ht., #3 can., well-branched top with at least 4 canes 18" and up.

Spirea x bumalda, Bumalda Spirea: 18-24" Ht., #3 can., well-branched top with at least 4 canes 18" and up.

Viburnum dentatum, Arrowwood Viburnum: 24-36" Ht., #3 can, well-branched top with at least 4 canes. Extra dense and heavy.

(4) MEDIUM EVERGREEN SHRUBS – CLASS B

Ilex glabra, Inkberry: 18-24" Ht., #3 can. Heavy symmetrical top with at least 8 canes 18" and up, furnished to the ground, spread of top 18". 'Shamrock' or 'Compacta' when specified.

Ilex crenata, Japanese Holly: 18-24" Ht., #3 can, bushy, heavy rounded top, well furnished to the ground.

Juniperus conferta 'Blue Pacific', 'Blue Pacific' Shore Juniper: 12-18" Ht., #3 can.

Juniperus horizontalis 'Bar Harbor', Bar Harbor Juniper: 12-15" H, #3 can, at least 3 canes 12" and up.

Prunus laurocerasus, Cherry Laurel: 18-24" Ht., #3 can.

(5) PERENNIALS #2 can

Ornamental perennials including but not limited to the genus Agastache, Asclepias, Astilbe, Chelone, Echinacea, Eupatorium, Geranium, Hemerocallis, Hibiscus, Iris, Liatris, Liriope, Lobelia, Mondarda, Nepeta, Nipponanthemum, Rudbeckia, Salvia, Sedum, Solidago, Symphyotrichum, Verbena, and Vernonia. #2 can, must be in full leaf, well established in pot.

(6) GRASSES #2 can

Grasses: Grasses including but not limited to the genus Acorus, Calamagrostis, Carex, Hakonechloa, Juncus, Panicum, Pennisetum, Sorghastrum and Schizachyrium. #2 can, vigorous specimens typical of the species specified in the plans.

(7) ROSES (#2/#3 can)

Rosa 'Meidiland': 18" to 24", #3 can (hardy varieties, which mature into shrub form or groundcovers).

Rosa 'Carefree Delight' & 'Carefree Wonder': 18" to 24" H, #3 can (matures to tight compact alternative to Rosa Rugosa).

Rosa spp. Flower Carpet Roses ®: 18" to 24" H, 2 Gal., must have at least 3 canes, 15" and up.

Rosa palustris, Swamp Rose: 18" to 24" H, #3 can, must have at least 3 canes 15" and up.

Rosa rugosa, Rugosa Rose: 18" to 24" H, #3 can, must have at least 3 canes 15" and up.

Rosa 'The Fairy,' The Fairy Rose: 18" to 24" H, 2 Gal. Heavy well-rounded top.

(8) ROSES (#5 can)

Rosa 'Knock Out,' Knock Out Rose: 18" to 24", 2 Gal., must have at least 3 canes 15" and up.

(9) GROUNDCOVERS #1 can

Arctostaphylos uva ursi, #1 can: vigorous, well-established in pot

Ajuga reptans, #1 can: vigorous, well-established

Campsis radicans, #1 can; vigorous, well-established in pot.

Convollaria majalis, #1 can: 'Rosea' when specified

Euonymous coloratus, # 1 can; vigorous, well-established in pot.

Hedera helix, English Ivy: #1 can; vigorous specimens, well-established in pot.

Iberis sepmervirens, #1 can, well-established

Liriope muscari, Liriope: #1 can; must have well-rounded leafing pattern. 'Big Blue,' 'Variegata'

Liriope spicata, Liriope: #1 can; vigorous specimens, well-established in pot.

Lysimachia nummularia, #1 can, well-established

Pachysandra terminalis, Japanese Pachysandra: #1 can; vigorous specimens, well established in pot.

Sedum brevifolium: #1 can, vigorous, well-established

Sedum spurium 'John Creech': quart; vigorous, well-established.

Thymus praecox, #1 can: vigorous, well-established

Vinca minor, #1 can: vigorous, well-established

(10) GROUNDCOVER PLUGS

Penstemon Digitalis, White Beard Tongue: Plugs, vigorous, well-established

PM.8 DESCRIPTION

The Contractor shall plant the material specified in the following plant schedule in the planting beds in accordance with the plans and specifications, or as directed by the Engineer. The Contractor shall be liable for any damages to property caused by planting operations, and all areas and construction disturbed shall be restored to their original conditions, to the satisfaction of the Engineer.

PM.9 MATERIALS

Plant names, size, and grading standards shall conform to those prepared by the American Association of Nurserymen Horticultural Standards, 2014 Edition, unless otherwise specified. No substitution shall be permitted, except with the written permission of the Engineer in consultation with the NYC Department of Parks and Recreation Green Infrastructure Liaison.

Burlap: Burlap shall be a natural fabric. No nylon burlap shall be permitted.

Cord or Rope: Cord or rope shall be sisal twine. Nylon rope shall not be permitted.

PM.10 CONSTRUCTION METHODS

(A) Unless otherwise directed by the Engineer in consultation with the NYC Department of Parks and Recreation trees and deciduous plant materials may be planted from March 1st to May 15th and from October 1st to December 15th; or to when weather permits. Evergreen material shall be planted from April 1st to May 15th and from September 1st to October 15th or as weather permits. In case the planting season is missed for any reason, the Contractor shall cover the soil with jute mesh.

(B) No planting shall be done except in the presence of the Engineer or the Engineer's representative and the approved Tree Consultant. All material shall be inspected by the Engineer as it is removed from the truck, prior to placing in an approved storage area or the designated planting site. All rejected material shall be removed from the site and replaced with acceptable material at no additional cost to the City.

Bare root material shall be adequately protected from drying out and immediately heeled in after inspection. The bundles of heeled-in plants shall be set upright on the ground, covered with mulch, and kept adequately moist until the time of installation. Until the time of planting, all plant material shall be stored in an approved location, securely fenced and maintained, to the satisfaction of the Engineer, at no additional cost to the City. All plants not planted immediately shall be watered as necessary to maintain optimal health until planting.

For each plant, dig a hole to correct depth for the placement of the plant material. Place balled and burlapped material in the prepared planting pit by lifting, and carry it by the rootball. Set the tree or shrub straight and in the center of the pit, with the most desirable side facing toward the predominant view. All material shall set, after settlement, at the same level at which they have grown in the nursery. Care shall be exercised in setting the plants plumb. All ropes, stones, etc. shall be removed from the pit before backfilling. Soil for backfilling shall be loose and friable and not frozen or solid.

Cut and remove rope or wire from the top fifty (50%) percent of the rootball and pull the burlap back to the edge of the ball. Remove as much woven product and twine as possible. All plastic or synthetic fabric must be removed from the ball at the time of planting. Any wire basket enclosed root ball will need to have at least two-thirds (2/3) of the wire basket cut away from the sides and top of the ball and removed. Remaining lateral wires must be cut to prevent future root interference. Wire must not be galvanized or aluminum wire.

Balled and burlapped plants shall be handled so that the ball will not be loosened. After the soil has been thoroughly firmed under and around the ball, the burlap shall be cut away from the upper half of the ball, and the remaining burlap adjusted to prevent the formation of air pockets. Where directed by the Engineer, the burlap shall be entirely removed. Soil shall be firmed at six (6") to eight (8") inch intervals and thoroughly settled with water. Plants with exposed roots shall be placed in the proper position in the center of the pit after the soil in the bottom of the pit has been firmed. Roots shall be arranged in their natural position and existing soil worked in among them, firmed at intervals and thoroughly settled with water. Care shall be taken to avoid bruising or breaking the roots when tamping the soil. All large and fleshy roots which are bruised or broken shall be pruned, making a clean cut before planting.

Container plants shall be carefully removed from the containers or flats immediately prior to planting and set to the same depths as they were grown in the nursery bed or container, to the correct spacing indicated on the plans. Roots shall be arranged in their natural position and

Engineered Soil and Sand worked in among them, taking care to avoid bruising or damaging the roots. No later than one (1) hour after planting, all plants shall be thoroughly settled with water.

(C) Mycorrhizal Fungi Inoculant Shall be applied by means of a three ounce (3 oz.) premeasured dry formulation packet, such as Mycor Tree Saver Transplant®, as manufactured by Plant Health Care, Inc., Pittsburgh, Pa., Rhizanova Tree Transplant, as manufactured by Becker Underwood, Inc., or approved equal. Packets shall contain, as a minimum: one thousand (1000) live spores of Vesicular-Arbuscular fungi, including: *Entrephosphora columbiana, Glomus clarum, Glomus etunicatum, and Glomus sp.*; seventeen million five hundred thousand (17,500,000) live spores of Ectomycorrhizal fungi (*Pisolithus tinctorius*); Biostimulant ingredients including *Yucca schidigera* extract; soluble sea kelp extract derived from *Ascophylum nodosum*; humic acids; and acrylamide copolymer gel as a water absorbent medium. Mycorrhizal fungi inoculant shall be added to the top six to eight inches (6-8") of backfill soil in each planting pit and thoroughly mixed to distribute the inoculant. The material shall be applied according to the following chart:

Size of rootball or container	Ounces per plant
1 gallon	1
2 gal.	2
#3 can.	3
5 gal.	3
7 gal.	3
10 gal.	3
15 gal.	3
20" B&B	6
24" B&B	9
30" B&B	9
36" B&B	12
12" B&B	12

(D) Fertilizer Tablets: Shall be Healthy Start Macro Tablets®, as manufactured by Plant Health Care, Inc., Old Westbury, N.Y., or approved equal. The tablets shall have a nutrient analysis of 12-8-8 and contain a minimum twelve percent (12%) humic acid by weight, as well as biostimulants derived from sea kelp, amino acids, and a wetting agent derived from *Yucca schidigera*. Tablets shall contain a minimum 695,000 each of the following beneficial bacteria: nitrogen fixing, phosphorus solubilizing, and growth promoting. Twenty one gram (21 gm.) twenty four month (24 mo.) release tablets shall be added to the top four inches (4") of backfilled soil in the rates indicated on the following chart:

Size of rootball or container	Tablets per plant
1 gallon	1
2 gal.	2
#3 can.	2
5 gal.	3
7 gal.	3
10 gal.	4
15 gal.	5
20-24" B&B	5
30-36" B&B	6
42–48" B&B	7

(E) The Contractor shall cultivate and rake over finished planting areas and shall leave the site in an orderly condition. On level ground or slight slopes, a shallow basin a little larger than the diameter of the plant pit shall be left around each plant, as shown on the plans, or as directed by the Engineer. On steep slopes, the soil on the lower side of the plant shall be graded in such a manner that it will catch and hold water, as shown on the plans, or as directed by the Engineer.

Upon completion of planting, all debris and waste material resulting from the planting operation shall be removed from the project area, and the affected area raked and cleaned as necessary.

All work done in preparing shallow basins or grading of plant pits on steep slopes and regrading and reseeding of plant saucers shall be deemed included in the unit price per plant. All berms raised for shallow basins in level or gently sloping grass areas shall be removed at the end of the guarantee period. This Engineered Soil and Sand shall be cast even over the surrounding grass areas and grass seed sown over the removed berms.

(F) Only crossing, broken or badly bruised branches shall be removed. These shall be pruned with a clean cut. All pruning shall be done with sharp pruning tools in accordance with instructions of the Engineer and the attached pruning diagram. At the time of planting, pruning cuts shall be made at the base of the branch at such a point and angle that neither the branch collar nor the bark of the stem is damaged, and that no branch stub extends from the collar. Crowns of young trees shall not be cut back to compensate for root loss. No leaders shall be cut.

(G) The Contractor shall establish a neat edge where planting areas meet grass areas, as shown on the plan or as directed by the Engineer. Edging shall be done by competent mechanics in a workmanlike manner with a spade or edging tool immediately after all planting is completed.

Particular care shall be exercised in edging to establish good flowing curves as shown on the plan or as directed by the Engineer. Edging shall be maintained by the Contractor until final acceptance of the contract.

(H) All staking shall be done during planting operation and shall be maintained throughout the first year of the guarantee period.

Stakes shall be of white cedar with bark attached and shall show no sign of cracking or decay. They shall have a maximum allowable deflection of ten percent (10%). All trees shall be supported by two (2) stakes, they shall be eight (8') feet long; the diameter at the middle shall be not less than (2") inches or more than two and three quarters (2-3/4") inches and the diameter at the butt shall not exceed three (3") inches. Stakes shall be placed a minimum distance of one (1) foot away

from the trunk of the tree, taking care to stay clear of the roots, driven thirty (30) inches into the ground, and shall be fastened to the tree with a suitable length of 3/4" wide, flat, woven polypropylene material as manufactured by DeepRoot®, San Francisco, CA or approved equal that is knotted and nailed to the stakes with one (1) inch galvanized roofing nails as directed by the Engineer.

Unless otherwise directed, trees shall be staked as shown on the plans and in accordance with these specifications. Stakes shall be set parallel to curbs. Trees shall stand plumb after staking. Stakes, and woven polypropylene material, shall be removed at the end of the first year of the two year guarantee period, unless directed otherwise by the Engineer. At the time the stakes are removed any holes left by the stake shall be filled with top soil at no additional cost to the city.

(I) At the time of planting, the entire planting bed shall be saturated to a depth of one (1) foot with twenty (20) gallons being distributed to each tree. Water shall be free from oil, have a pH not less than 6.0 or greater than 8.0 and shall be free from impurities injurious to vegetation. Unless otherwise directed, water may be drawn from mains owned by or supplying water to the City of New York.

Watering shall also take place throughout the guarantee period, as per GI-5.09 at approximately two week intervals from May 1 to October 31. Not less than once a week if it has not rained during that period. The Engineer may order less watering based on weather conditions, resulting soil water content or other factors. If drought conditions warrant, the Engineer may order more frequent watering than scheduled or during non-scheduled periods. A watering schedule shall be submitted to the Engineer each week.

Water shall not be applied in a manner which damages plants, plant saucers, stakes or adjacent areas. Each plant saucer shall be carefully filled with water in a manner which does not erode the soil or the plant saucer. Watering shall not cause uprooting or exposure of plant's roots to the air. Damages resulting from these operations shall be immediately repaired at the Contractor's expense.

Where water is supplied from City hydrants, the Contractor shall obtain a free hydrant permit from the NYC Department of Environmental Protection. Permits are issued for a 30-day period, and the Contractor is responsible for keeping the permits current. The permits are available from each borough office. To obtain a permit, the Contractor should bring a copy of their contract, indicating exemption from the permit fee, with a general description of the hydrant location (s) they propose to access.

During dry conditions as defined by the Engineer, the Contractor will add to water a wetting agent product that is meant to aerate soil and allow for more water to penetrate such as Yuccah® Wetting Agent, or DIEHARD™ Soluble Yucca Extract as manufactured by Plant Health Care, or Horticultural Alliance, Inc., or an approved equal. An anti-desiccant to help prevent loss of water through transpiration shall also be used when directed by the Engineer. The anti-desiccant product, approved by the Engineer, must be mixed into water at appropriate ratios (Contractor must follow product instructions).

PM.11 LANDSCAPE GUARANTEE AND REPLACEMENT

(A) The Contractor shall maintain all trees within the limits of this contract in accordance with the plans, specifications and directions of the Engineer until two (2) years after the final acceptance of the whole work of this contract.

(B) All planting areas shall be cultivated and weeded with hoes or other approved tools within the period from May 15th to October 31st. Such cultivating and weeding shall be repeated at least every three (3) weeks. Prior to the installation of plant material, the Contractor shall submit a weeding schedule and plan to be approved by the Engineer. The plan shall include proposed methods of cultivating and weeding indicating all proposed weeding tools. Weed whackers may not be used.

Weeds shall be removed with the root. Under no conditions shall weeds be allowed to attain more than six (6) inches of growth. No separate payment will be made for watering, weeding or any other maintenance outlined in this section throughout the duration of the maintenance period and such work will be deemed included in the bid for Plant Material.

(C) All landscaping work shall have upon planting a guarantee period as mentioned in the Schedule "A" of this project. Contractor shall request in writing an inspection of all landscaping work when completed to begin the maintenance and guarantee period.

Maintenance shall include weeding, cultivating, edging, control of insects, fungus and other diseases by means of spraying with an approved insecticide or fungicide, pruning, adjustment and repair of stakes, and woven polypropylene material, repair of minor washouts, soil replacement, mulching and other horticultural operations necessary for the proper growth of all trees, and for keeping the entire area within the contract limits neat in appearance.

(D) Plant material found to be unsatisfactory or in poor condition at the inspection shall be removed and replaced at the appropriate planting season for that type of plant material. No payment will be made for plant material found to be unacceptable during this inspection.

(E) The Contractor shall submit, in writing, any conditions or species which he feels may be questionable prior to ordering said plants. If he is agreeable, the Engineer will substitute recommended species or address the conditions deemed unsuitable. However, upon ordering a plant and installing it, the Contractor accepts the responsibility for guaranteeing the plant's survival. There shall be no exception.

(F) During the guarantee period (as specified in Schedule A), the Contractor shall replace, in accordance with the contract plans and specifications, any planted tree, shrub, perennial or grass that is dead or, in the opinion of the Engineer, is in an unhealthy or unsightly condition, and/or has lost its natural shape due to dead branches, excessive pruning, inadequate or improper maintenance, or other causes including vandalism, prior to final acceptance, in the next planting season. There shall be a guarantee on shrubs, groundcover plants, perennials and grasses after planting for the remaining period of the project. When instructed by the Engineer, the Contractor shall replace trees, shrubs, perennials or grasses that have died after final acceptance in the next appropriate planting season even when the next planting season falls outside the remaining period of the project. Trees, shrubs, perennials or grasses that die within the guarantee period shall be replaced as many times as necessary so that there is a live tree, shrub, perennial or grass at each location at the end of the guarantee period (which is the remaining period of the project). The cost of replacement(s) shall be included in the unit price bid for the various furnished items of the

contract.

Where vandalism or related causes are agreed upon by the Engineer as the cause for tree, shrub, perennial or grasses replacement, the Contractor shall be responsible for replacement for one time during the guarantee period after final acceptance. Where dead shrubs, groundcover plants, perennials or grasses have been identified, whether due to natural causes or vandalism, the Contractor shall remove the dead material, including stakes, and wire within three (3) weeks of notification. The Contractor shall add Engineered Soil and Sand, grass seed or appropriate paving material at the direction of the Engineer to the pit to eliminate potential tripping hazards at the time of removal.

Failure to replace trees, shrubs, perennials or grasses in the next appropriate planting season will result in the assessment of liquidated damages in the amount of two hundred (200) dollars per tree and eighty (80) dollars per shrub and (20) per perennial or grass. The assessment of said liquidated damages shall not absolve the Contractor of its responsibility to replace the plant material.

(G) Unless a written waiver of this clause is issued, under the terms of the guarantee, replacement plants shall be chosen only by the Engineer.

PM.12 MEASUREMENT

The quantities of Woody or Herbaceous Plant Materials to be paid for under EACH item shall be the number of trees, shrubs, groundcover plants, perennials, or grasses of each Class or size planted to the satisfaction of the Engineer.

PM.13 PRICES TO COVER

The price bid for each Woody Herbaceous Plant Material planted shall be the number of trees, shrubs, groundcover plants, perennials, or grasses of each Class or size furnished, planted and maintained, in accordance with the Contract Drawings, the specifications and the directions of the Engineer.

Engineered Soil and Sand and mulch with jute mesh, where called for in the Contract Drawings or details, will be paid under their respective items.

The cost of water, regardless of source, is deemed included in the unit prices bid. No extra payment will be made for water coming from the Contractor's own source.

Payment will be made under:

Item No.	Item	Pay Unit
PM-01	PLANT MAJOR TREES (2.5" TO 3" CALIPER)	EACH
PM-03	PLANT FLOWERING AND ORNAMENTAL TREES	EACH
PM-04	TRANSPLANT TREES (UP TO 4" CALIPER)	EACH
PM-09	MEDIUM EVERGREEN SHRUBS – CLASS B	EACH

PM-12	MEDIUM DECIDUOUS SHRUBS – CLASS B	EACH
PM-15	ROSES (#2 / #3 can)	EACH
PM-15A	ROSES, #5 can	EACH
PM-17	PERENNIALS, #2 can	EACH
PM-21	GRASSES, #2 can	EACH
PM-24	GROUND COVERS, #1 can	EACH
PM-24A	GROUND COVER PLUGS	EACH

SECTION R-1
(NOT A PAY ITEM)
FINAL RECORD DOCUMENTS

R-1.1 SECTION INCLUDE

(A) R-1.2 General Requirements for Submittals

(B) R-1.3 Definitions

(C) R-1.4 Paper

(D) R-1.5 Electronic

(E) R-1.6 Formats

(F) R-1.7 As-Built Drawings

(G) R-1.8 Final Copy Shop Drawings

(H) R-1.9 Bid Set Specifications

(I) R-1.10 Conformed Drawings

(J) R-1.11 Change Orders

(K) R-1.12 Job Photographs

(L) R-1.13 Key Documents

(M) R-1.14 Additional Documents

(N) R-1.15 Quantities

(O) R-1.16 Records in Paper Formats

(P) R-1.17 Records in Electronic Formats

(Q) R-1.18 Measurement and Payment

R-1.2 GENERAL REQUIREMENTS FOR SUBMITTALS

(A) Except where otherwise specified, the Contractor for each Contract shall submit the following Final Record Documents according to the requirements of Table #1 and as specified herein:

(1) As-Built Drawings

(2) Final Copy Shop Drawings

(3) Approved Working Drawings

(4) Key Documents

(5) Job Photographs

(6) Job Videos

(7) Additional Documents

(B) Submittal of these documents shall be a condition precedent to obtaining the final payment under Article 45 of the Standard Construction Contract.

R-1.3 DEFINITIONS

(A) Archive. In this Section, to "archive" shall mean to furnish as a final record document.

(B) As-Built Drawings. The "As-Built Drawings" reflect the "as constructed" final product. These drawings shall use the same title blocks and sheet numbers as the original "Contract Drawings", with the exception that an "AB" is prefixed onto the original drawing number.

(C) Final Copy Shop Drawing (FCSD).The "Final Copy Shop Drawing" shall be the approved copy (FAS or FAC) of the Shop Drawing corrected to reflect any deviations made for the installed condition showing the actual construction.

(D) Bid Set Specifications (including Addenda). The "Bid Set Specifications" shall be the set of original Contract Specifications Text issued by NYCDDC for the solicitation of contract bids including any "Addenda" issued during the Bid Period.

(E) Change Orders. The "Change Orders" shall include registered "Change Order Forms" and the complete sets of attached text and/or drawings for all Design and Field Change Orders.

(F) Job Photographs and Videos. "Job Photographs and Videos" shall be prepared by the Contractor specified in Subsection R-1.17 and shall conform to the requirements of that Subsection.

(G) Key Documents. Key Documents shall include, but not be limited, to the following items:

(1) Signed portions of the Standard Construction Contract (including Bonds)

(2) Signed and submitted Bid Schedule of Prices

(3) Award Folder Contents

(4) Contract Award Letter

(5) Order To Commence Work Letter

(6) Approved Detailed Estimate Breakdown

(7) Article 43/44 Substantial Completion of the Standard Construction Contract

(8) Substantial Completion Payment

(9) Final Evaluation

(10) Final Extension of Time (if applicable)

(11) Final Payment

(12) Claim Settlements (if applicable)

(13) Certificate of Occupancy (if possible)

(14) Warranties

(15) Survey

(H) Additional Documents. These shall be any "Additional Documents" that the Engineer directs to be furnished as a "Final Record Document" in accordance with the requirements of this Section.

R-1.4 PAPER

All records in paper formats shall be produced in conformity with Subsection R-1.17 – Records in Paper Formats.

R-1.5 ELECTRONIC

All records in electronic format shall be produced in conformity with Subsection R-1.18 – Records in Electronic Formats.

R-1.6 FORMATS

The "Final Record Documents" shall be furnished in paper, microfilm and electronic formats in the quantities shown on Table 1 at the end of this Section".

R-1.7 AS-BUILT DRAWINGS

(A) The Contractor is to create an As-Built Drawing Set by revising the Contract Drawings electronically using AutoCAD. The Contractor shall independently confirm that the changes made by the Addenda to the original specifications or Contract Drawings are correctly reflected in the As-Built Drawing Set. Files submitted in AutoCAD format will be bound to include all related matter (e.g. base files, font files and shapes). Each file shall be viewable and printable in its entirety without recourse to external files. When a Contractor states he cannot provide AutoCAD versions of the As-Builts due to limited resources, the Engineer may approve hard copy submittal.

(B) The Contractor shall use the information compiled during construction to create an As-Built Drawing Set. The Contractor shall document any deviations, changes, etc. from the configurations shown on the original Contract Drawings or revised drawings issued during the course of executing the work including Change Orders, Design During Construction (DSDC) memorandums, Requests for Information (RFIs), Requests for Clarification (RFCs), etc. These deviations, changes, etc. shall generally relate to topographic features, relocation of structures, or locations of underground items such as pipelines, duct banks, manholes or footings. Survey distances, coordinates and/or elevations shall be included to accurately locate all such items. All deviations, changes, etc. shown shall be field verified.

(C) Contractor should have the electronic files of the contract drawings. However, should the Contractor require an additional copy, the Engineer will supply the Contract Drawings AutoCAD electronic files on DVD-Rs upon written request, if such copies are available. The AutoCAD files will consist of a bound set of drawings.

(D) Drawing Size – The As-Built drawings are to be the same size as the full size Contract Drawings.

(E) Generate the new As-Built drawing number as per the following steps:

(1) The As-Built drawing number is the original contract drawing number prefixed by an "AB" for As-Built.

Example: If the drawing number for a contract drawing is 36G-02S-14, the As-Built drawing number will be "AB-36G-02S-14".

(2) If a new drawing is produced, its number can be added to the end of the series. (i.e., if 14 is the last drawing in the series, then the first new drawing becomes 15; the second new one becomes 16, etc.)

(3) If a new drawing is inserted into the middle of a series, it is to have a letter suffix starting with A (i.e., 02A, 02B, etc.)

Example: If the drawing number for a contract drawing is 36G-02S-02, the new, additional As-Built drawing will be numbered "AB-36G-02S-02A".

(F) Designation – The designation "As-Built Drawing" is to be added to the drawing. Using AutoCAD, insert the words "As-Built Drawing" above the title box in the right hand corner of the drawing. (Do not include the quotation marks in "As-Built Drawing" when marking the drawing.)

(G) Modifying the Contract Drawings – Prior to submitting an As-Built drawing made from a Contract Drawing for review and acceptance, the Contractor is to create a "clean" finished copy of the drawing by undertaking the following:

(1) Remove all signatures and certifications from the Contract Drawing

(2) Remove all previous revisions and references from the revision boxes

(3) Remove the Professional Engineers seal, Engineer's company names, and any initials from the drawing title block

(4) Modify all of the original title boxes to show the Contractor information including the name of the Contractor and the date.

(5) Remove all previous markings – notes, revision indicators, balloons, submittal stamps, etc. – from the drawing.

(H) Contractor's Information – The Contractor's name, address, contact information and date (month and year) the project is completed is to be added to the drawing. Place this information in the title block in the space previously utilized for the Engineer's name.

(I) Adding Revisions – Items/areas changed are to be enclosed within a cloud line. The revision cloud layer is to be a 0.024-inch line thickness.

(J) The Contractor shall submit copies of the As-Built Drawings for review and approval by the Engineer. These submittals shall show the deviations and changes from the original design drawings by using red-line mark-ups. The Contractor shall make modifications to the submitted As-Builts as required by the Engineer. In the final, approved set of As-Builts, the red lines shall be converted to black.

(K) The final approved set of As-Builts shall have the following statement on the cover sheet:

"These As-Built Drawings for Contract ###, as prepared by XYZ Company, have been prepared as Record Copy Drawings."

The above statement shall be signed by the representative of the Contractor. The signer shall be identified along with the Contractor.

R-1.8 FINAL COPY SHOP DRAWINGS (FCSD)

(A) Contractor shall furnish all "Final Copy Shop Drawings" in the NYC Department of Envrionmental Protection (DEP) format to the Engineer . The required NYCDEP format will be provided by the Engineer to the Contractor. The "Final Copy Shop Drawing" shall be the approved copy of the Shop Drawing corrected to reflect any deviations made for the installed condition showing the actual construction.

(B) In addition to submitting the "Final Copy Shop Drawings" as a final item at the end of construction, each Contractor shall prepare and submit "Final Copy Shop Drawings" for approval on a continual basis during the performance of the project when the particular item of work for a "Final Copy Shop Drawing" has been completed. The Contractor shall submit the FCSD within 30 days after the completion of the work item.

(C) The drawing revision boxes shall have all previous revisions and references removed from the drawings. The revision boxes shall indicate "Final Copy Shop Drawing".

(D) Each drawing shall bear the original submittal file number, without the revision number, which shall be written in the lower right hand corner of a drawing above the title box. The file number shall also have a prefix, which identifies it a FCSD. Additionally, the Contract Name shall be added, if it doesn't appear in the original file number.

For example, if the file number for an approved Shop Drawing is 16221-002, the FCSD will be numbered "FCSD-NC-36G-16221-002", where NC-36G represents the specific Contract Number.

(E) Supporting Documentation: Supporting documentation shall bear the correlating Final Copy Shop Drawing file number so as to identify it. All supporting documentation (e.g. catalog cuts, test results, calculations, etc.) shall be submitted, together with the related FCSD so as to maintain a complete set of all documents submitted with each FCSD.

(F) Submittal for Approval. Two full size paper prints of each drawing shall be submitted for approval. The drawing shall be checked by the Resident Engineer against the field records and a copy shall either be stamped "Approved" or returned with comments for correction and re-

submittal by the Contractor. The Contractor shall retain one approved set of the FCSDs for use in submitting the entire set in paper, microfilm and electronic copies.

R-1.9 BID SET – SPECIFICATIONS

If the Contractor does not have a complete set of the original Bid Set of Specifications and Addenda in the original PDF format (non-scanned), he may request a set from the Engineer. Upon request, the Bid Set Specifications and Addenda will be provided to the contractor in PDF format, if possible. If a PDF format is not available, then a paper hard copy set may be utilized. This may also be requested from the Engineer if required and shall be provided if possible.

In addition to the Bid Set, the conformed set of Specifications shall also be archived by the Contractor for a single contract project.

R-1.10 CONFORMED DRAWINGS

If the Contractor does not have a complete set of the Conformed Set of Drawings in the AutoCAD format, he may request a set from the Engineer. If possible, the Conformed Set of Contract Drawings will be provided to the Contractor in AutoCAD format, bound with their respective data sets.

R-1.11 CHANGE ORDERS

All change orders (both field and design) produced during the construction of the projects shall be archived.

R-1.12 JOB PHOTOGRAPHS

Job Photographs shall be produced and submitted by the Contractor as specified in Subsection R-1.18.

R-1.13 KEY DOCUMENTS

Key Documents produced during the construction of the projects shall be archived. They shall consist generally of the items defined hereinbefore.

R-1.14 ADDITIONAL DOCUMENTS

Any additional Documents such as Soil Classification Reports, Environmental Impact Statements, Site Assessments, Geotechnical Reports, permits, RFI's, etc. shall also be archived when directed by the DEP. If the Contractor does not have copies of any documents, they will be provided by the Engineer in electronic or paper format, where possible.

R-1.15 QUANTITIES

The quantities to be furnished for each Final Record Document shall be as shown in Table 1 - Summary of Final Record Documents to Be Furnished.

Table 1 Summary of Final Record Documents To Be Furnished						
Final Record Document Type	Paper	Electronic (DVD-R sets)	Mylar	Microfilm (35mm second generation diazo)	Microfilm (16mm first generation silver-gelatin)	Microfilm (16mm second generation diazo)
As-Built Drawings	3 sets per Contract Drawings	4 sets (PDF/A & AutoCAD) per Contract Drawings	1 set per Contract Drawings	NA	NA	NA
Final Copy Shop Drawings	1 set	4 sets (PDF/A & AutoCAD)	NA	NA	NA	NA
Approved Working Drawings	2 sets	4 sets (PDF/A & AutoCAD)	NA	NA	NA	NA
Key Documents	1 set	4 sets (PDF/A)	NA	NA	NA	NA
Additional Documents	1 set	4 sets (PDF/A)	NA	NA	NA	NA
Job Photographs	1 set per bioswale or ROWSGS	3 sets (TIFF or JPEG)	NA	NA	NA	NA

R-1.16 RECORDS IN PAPER FORMATS

(A) General

(1) This specification establishes criteria for paper documents that will last several hundred years without significant deterioration under normal use and storage conditions in the archives of the New York City Department of Environmental Protection.

(2) This specification identifies the properties of the paper and of the printing processes, and

the tests required to demonstrate these properties.

(3) The specification applies to documents printed on paper which have a records retention and disposition schedule rating in excess of 25 years. Such documents are created by the consultants and contractors to the Department of Environmental Protection.

(4) These documents are specified in Section 1.19 - Final Record Documents.

(B) Reference Standards

This specification is intended to be used in conjunction with following standards and guidelines. When these standards and guidelines are superseded by revisions, the revisions shall apply:

(1) ANSI/NISO Z39.48, Permanence of Paper for Publications and Documents in Libraries and Archives. This Standard may be obtained in electronic format from HTTP://WWW.NISO.ORG.

(2) Library of Congress - Preservation Photocopying. This publication may be obtained in electronic format from the Department of Environmental Protection.

(3) National Archives and Records Administration Technical Information Paper No. 5, Tape Pull Test. This publication may be obtained in electronic format from the Department of Environmental Protection.

(4) National Archives and Records Administration - Peel Test target. This publication may be obtained in electronic format from the Department of Environmental Protection.

(C) Definitions

(1) Small-Format Documents: documents sized 11 by 17 inches or smaller.

(2) Large-Format Documents: documents sized larger than 11 by 17 inches.

(D) Quality Assurance

(1) Paper Certification: All documents covered by this specification shall be accompanied by a Certification from the manufacturer of the paper that it complies with ANSI/NISO Z39.48.

(2) Printing Test Certification: The organization that operates the printing processes and materials used to produce the documents covered by this specification shall submit the following documentation as proof that the tests have been carried out:

a. An affidavit, signed by the supervisor responsible for the production area, certifying that the tests have been performed in accordance with the procedures described in the National Archives and Records Administration Technical Information Paper No. 5, Tape Pull Test.

b. All of the Peel Test Targets actually used to perform the tests.

(E) Products

(1) Paper

a. All paper used for documents covered by this specification shall comply with the requirements of ANSI/NISO Z39.48, Permanence of Paper for Publications and Documents in Libraries and Archives, except as amended by this specification. The ANSI/NISO Z39.48 Standard specifies the pH, tear resistance, alkaline reserves and paper stock required.

(2) Paper Stock

a. Coated or uncoated paper may be used.

b. Uncoated paper shall not be less than 24 pounds basis weight.

c. Coated paper shall not be less than 28 pounds basis weight.

(F) Printing Processes

(1) Small Format Documents, With Color Images and With Black and White Images

Only electrophotographic printing shall be used. When color electrophotographic printing is used, the process shall be certified by the manufacturer of the printer as not soluble in water, chemically stable, and resistant to fading, for a period of not less than 50 years. All documents printed using a color electrophotographic printer shall be accompanied by a certification from the manufacturer of the printer that the process is in compliance with this requirement.

(2) Large-Format Documents, With Black and White Images

Only electrophotographic printing shall be used. The Department of Environmental Protection expects that most large-format documents shall be printed in black and white. Only documents where color is an essential information component of the document may be printed in color, under the provisions of Paragraph C. below. An example of documents where color may be an essential information component is a topographic drawing produced from data in a Geographic Information System.

(3) Large-Format Documents, With Color Images and With Black and White Images

Either electrophotographic or inkjet printing shall be used. When inkjet printing is used, a formulation of ink shall be used that is certified by the manufacturer of the printer as not soluble in water, chemically stable, and resistant to fading, for a period of not less than 50 years. All documents printed using an inkjet printer shall be accompanied by a certification from the manufacturer of the inks that the inks are in compliance with this requirement.

(G) Testing

(1) Test Method: All printing processes and materials used to produce the documents covered by this specification shall be tested periodically to ensure proper function, using the National Archives and Records Administration Technical Information Paper No. 5, Tape Pull Test, and Peel Test Target.

(2) Test Frequency: All printing processes and materials used to produce the documents covered by this specification shall be tested not less than twice a day, once at the beginning of the work day, and once at the end of the work day.

(H) Inspections

The Department of Environmental Protection reserves the right to carry out inspections of the production facilities without notice.

R-1.17 RECORDS IN ELECTRONIC FORMATS

(A) General

(1) This Specification describes the requirements for the electronic records for the items specified in Section 1.19 - Final Record Documents.

(2) This Specification does not cover digital objects which include a time base correction code (e.g., analogue or digital video recordings, analogue or digital audio recordings, instrumentation data feeds, etc.), or geo-coded objects (produced by Geographic Information Systems-GIS).

(B) Related Specifications

(1) Section R-1 – Final Record Documents

(2) Section R-1.17 – Records in Paper Formats

(C) Reference Standards

(1) Adobe Reference Specification for Tagged Image File Format (TIFF), revision 6.0 (1992).

(2) ANSI/AIIM MS44 – Recommended Practice for Quality Control of Image Scanners

(3) ANSI/AIIM MS52 – Recommended Practice for the Requirements and Characteristics of Original Documents Intended for Optical Scanning

(4) ANSI/AIIM TR34 – Sampling Procedures for Inspection by Attributes of Images in Electronic Image Management and Micrographic Systems

(5) ISO/19005-1 - Document management -- Electronic document file format for long-term preservation -- Part 1: Use of PDF 1.4 (PDF/A-1)

(D) Definitions

(1) Archive. In this Section, to "archive" shall mean to furnish as a final record document.

(2) Metadata - Metadata is commonly defined as "data about data." For the purposes of this specification metadata refers to the "descriptive metadata" that describes the content and form of the construction records known as "final record documents" (i.e. contract name, document date, construction phase, engineer of record, etc.) and supports the discovery (searching) and identification of the resources. See Metadata Table.

(3) Portable Document Format-Archival (PDF/A) - A standard that identifies a "profile" for electronic documents that ensures the documents can be reproduced the exact same way in years to come. A key element to this reproducibility is the requirement for PDF/A documents to be 100% self-contained. All of the information necessary for displaying the document in the same manner every time is embedded in the file. This includes, but is not limited to, all content (text, raster images and vector graphics), fonts, and color information. A PDF/A document is not permitted to be reliant on information from external sources (e.g. font programs and hyperlinks).

(E) Source of Electronic Records

In preparing the electronic records, the Contractor shall make every reasonable effort to obtain, from the originator (e.g., the manufacturer, the designer, etc.), documents in their original electronic format and incorporate these in the records. Subject to the approval of the Engineer, electronic records may be scanned from a paper version only when the Contractor cannot obtain the electronic version from the originator (e.g., the manufacturer, the designer, etc.).

(F) File Compression, File Formats, and Quality Control

(1) File compression is not permitted for any of the files in any format.

(2) File formats acceptable to DEP are ISO 19005-1 Portable Document Format-Archival (PDF/A); Tagged Image File Format (TIFF), version 6.0 ("II" format); and AutoCAD. All files shall be delivered to DEP with file names that use the default file extension for each of the above formats.

(3) Portable Document Format-Archival (PDF/A)

a. Security Settings: records converted to PDF/A must have all security settings deactivated (e.g., encryption, master passwords, and/or permissions) prior to transfer to DEP. Deactivating security settings ensures DEP's ability to support long term migration and preservation of the records.Uncoated paper shall not be less than 24 pounds basis weight.

b. Review of Special Features: Because of the complexities associated with certain PDF/A features, DEP may review PDF/A records containing special features on a case-by-case basis when the records are scheduled. Examples of special features include but are not limited to: digital signatures; links to other documents, files or sites; embedded files (including multimedia objects); form data; comments and/or annotations.

c. Fonts: electronic records that have been converted to PDF/A from their native electronic formats must have all fonts referenced in the record embedded within the PDF/A file to guarantee the visual reproduction of all text as created. This requirement is met by having, as a minimum, subsets of all referenced fonts embedded within the PDF/A file. All fonts embedded in PDF/A records must be publicly identified as legally embeddable (i.e., font license permits embedding) in a file for unlimited, universal viewing and printing.

d. Scanning Production Requirements: records converted from scanned images also must adhere to the production requirements described in section Error! Reference source not found.

(G) Tagged Image File Formats (TIFF)

(1) In the 'II' format (i.e., little-endian), byte order is always from the least significant byte to the most significant byte.

(2) The reference specifications for TIFF 6.0 can be found at http://partners.adobe.com/public/developer/tiff/index.html (as of 08/2005).

(H) Vector Drawings

(1) Each vector drawing (produced by a Computer-Assisted Design system—AutoCAD) shall be delivered to DEP in two different file formats: native AutoCAD format and Portable Document Format (PDF/A). The AutoCAD format will support future revisions and alterations related to operations, repairs and rehab work. The PDF/A will ensure that the drawing information can be viewed and printed by a wide spectrum of users working without the AutoCAD program or viewer. The PDF/A format is also intended to provide a stable preservation record copy of the original drawings. (Why not specify Application format in this spec?)

(2) Drawings will be "bound" to include all related matter, such as base files, font files, and shapes. Each file shall be viewable and printable, in its entirety, without recourse to external matter.

(3) When reproduced in Computer Output Microfilm—COM (see Specification 01334: Records in Microfilm Formats), drawings must be converted to a raster image file format. This conversion shall be performed from the PDF/A version of the drawing.

(I) Text Files

(1) The file format for all text files, whether converted from word processing applications or scanned, is Portable Document Format-Archival (PDF/A).

(2) The quality of documents to be scanned shall be governed by ANSI/AIIM MS52 "Recommended Practice for the Requirements and Characteristics of Original Documents Intended for Optical Scanning".

(3) Quality control in the scanning process shall follow the practices established in ANSI/AIIM MS44 "Recommended Practice for Quality Control of Image Scanning" and ANSI/AIIM TR34 "Sampling Procedures for Inspection by Attributes of Images in Electronic Image Management and Micrographic Systems". The sampling rates for each type of quality control (visual and printed) shall be established by written agreement with DEP. e production subcontractor shall supply a description of the quality control inspection performed as part of the scanning process and a report on the results of the last inspection performed on the images and the date of that inspection.

(4) Documents shall be scanned using equipment and scanning parameters sufficient to ensure full reproduction of all significant detail in the documents, such as (but not limited to) curved lines and fill in drawings, color and tonal gradations in photographic images, the smallest printed text, handwritten notes, and signatures. Records may be scanned in bitonal (1-bit) mode and 300 pixels per inch (ppi) or better only when the records consist exclusively of clean printed type possessing high inherent contrast (e.g., laser printed or typeset on a white

background). Records shall be scanned in gray scale (8-bit) and 300 pixels per inch (ppi) or better when the records consist of textual documents of poor legibility because of low inherent contrast, staining or fading (e.g., carbon copies, thermofax, or documents with handwritten annotations or other markings), or that contain halftone illustrations or photographs. Records shall be scanned in color (24-bit RGB) and 300 pixels per inch (ppi) or better when the records contain color information important to interpretation or content.

(J) Digital Photographs

(1) The file format for digital photographs is Tagged Image File Format (TIF).

(2) Photographic (raster) images may be produced directly by digital cameras or indirectly by scanning silver-gelatin images (film or prints). If the digital photographic images are produced indirectly by scanning silver-gelatin images, the preferred source is the silver-gelatin film image (whether negative or reversal) rather than prints made from that film image.

(3) Digital cameras and scanners shall produce records with true optical resolution. Images shall not be resized or interpolated to a higher resolution from a lower resolution.

(4) Photographic images shall be provided as continuous-tone (8-bit) gray scale or color (24-bit or 48-bit RGB) raster images.

(5) Digital camera files shall be captured as 6 megapixel files or greater with a minimum pixel array of 3,000 pixels by 2,000 pixels. Photographic images produced at this resolution and size is comparable in quality to 35-mm film photographs.

(6) Scanned photographs shall be produced as minimum 3,000 line files to approximate a 6 megapixel file according to the following image size and resolution guidelines. Photographic images conforming to these guidelines will be comparable in quality to 35-mm film photographs. Scan an 8" x 10" original (print, slide or negative) at 300 dpi to produce a file that is 2,400 x 3,000 pixels. Scan a 4" x 5" original (print, slide or negative) at 600 dpi to produce a file that is 2,400 x 3,000 pixels. Scan a 35-mm original (print, slide or negative) at 2100 dpi to produce a file that is 2,000 x 3,000 pixels.

(7) Quality control in the scanning process shall follow the practices established in ANSI/AIIM MS44 "Recommended Practice for Quality Control of Image Scanning" and ANSI/AIIM TR34 "Sampling Procedures for Inspection by Attributes of Images in Electronic Image Management and Micrographic Systems". The sampling rates for each type of quality control (visual and printed) shall be established by written agreement with DEP. The production contractor shall supply a description of the quality control inspection performed as part of the scanning process and a report on the results of the last inspection performed on the images and the date of that inspection.

(K) File Transfer Media

The current file transfer medium is a DVD-R. Alternative file transfer media may be used, at the discretion of Engineer. The DVD-Rs used for producing the electronic archives shall be:

(1) MAM-A Mitsui Gold DVD-R with White Inkjet Printable Surface,

(2) Or approved equal.

(L) Execution

(1) General

a. When creating DVD-Rs, the Contractor should organize the information in separate DVD-R's as presented below. For each Final Record Item, use as many disks as needed to accommodate the materials. The multiple disks will be further labeled to read "1 of x". So, if three (3) DVD-Rs are needed to accommodate the material for a specific Final Record Item, the DVD-Rs will be labeled Disk 1 of 3, etc.

b. Separate DVD-R's shall generally be prepared for the following items:

i. As-Built Drawings

ii. Final Copy Shop Drawings

iii. Bid Set Drawings (aka Design Drawings)

iv. Conformed Drawings

v. Bid Set – Specifications (including Addenda) – with Conformed Set of Specifications

vi. Key Documents

vii. Change Orders

viii. O&M Manuals

ix. Job Photographs

x. Additional Documents

c. For projects with smaller amount of Final Record Document files, the above volumes can be combined.

d. In those cases where the Contractor is not required to furnish a specific Final Record Document(s), as specified in OGI Standard Specification Section 1.19 - Final Record Documents, the transmittal letter for the set of DVD-Rs should state "Prepared by Others" for the volume(s) which are not the responsibility of the Contractor.

e. DVD-R's should be used as efficiently as possible but efforts should be made to avoid splitting a type of document onto multiple disks. Example: for the Bid Specifications, if the Information for Bidders, Standard Construction Contract, General Conditions, General Specifications and part of the Detailed Specifications fit on one DVD-R, but the Detailed Specifications could fit on a single DVD-R in entirety, include the Agreement, General Conditions and General Specifications on one DVD-R. Then add the Detailed Specifications to a second DVD-R. The first DVD-R will include empty space but adding hyperlinks can be more efficiently done and viewers can locate information more easily by keeping information together as much as possible.

f. The DVD-R label shall include:

i. The Project by number and name

ii. Location of the site

iii. Volume number and title(s) of the volume

iv. The total number of DVD-Rs for the Volume

v. The date (month and year) of when the materials were archived

vi. The preparer of the Final Record Document (i.e. Contractor or Consultant CM)

vii. For O&M Manuals, include the Equipment item, the Manufacturer, and the related Specification Section number.

viii. Example of a label is located at the end of this Section as guidance.

g. Files submitted in AutoCAD format shall be bound to include all related matter (e.g. base files, font files and shapes) so that each file is viewable and printable in its entirety without recourse to external files.

h. PDF/A files shall be 1200 dpi print quality.

(2) Metadata

a. For each type of Final Record Document listed below, a metadata table shall be prepared in Excel which will furnish the specified data for each type of document. The data elements to be furnished shall comprise the column headings in the Excel table. The data elements shall be furnished by the DEP prior to production of the Final Record Documents DVD-Rs.

b. The Metadata Excel Table shall appear at the beginning of related Final Record Document type specified above and shall serve as an index for those items in that Volume. Each file indexed in the Metadata table shall be hyperlinked so that clicking on the file name opens that file.

c. The Metadata Excel tables may be utilized as the Final Document Log. Templates for the Metadata Excel table for each Final Record Document shall be provided by the DEP.

d. Folder Structure

i. Each DVD-R shall have a folder structure that correlates to the major components of the Record Document, as specified below.

ii. The first folder for each Record Document shall always be the Metadata Table.

(3) Preparation of DVD-Rs for Final Record Documents. The DVD-Rs shall be prepared with the following folder structures:

a. As-Built Drawings (when required)

The first folder shall always be the Metadata Table. The other folders shall contain the entire set of As-Built Drawings in PDF/A and AutoCAD formats. Numbers shall be used in the names for the folders so that they appear in the correct sequence. For example, the folders for a set of contract "G" drawings would look like this:

1 - Metadata – Contract WI-79G– As-Built Drawings

MetadataTable-ContractWI-79G– As-Built Drawings.xls

2 - Contract WI-79G – As-Built Drawings (AutoCAD)

3 - Contract WI-79G – As-Built Drawings (PDF/A)"

b. In the Metadata Table and on the DVD-R, the file numbers for each drawing shall be:

"AB-Contract Number-####"

where "AB" = As-Built Drawings

and "Contract Number" = the specific contract number

and "####" = original sequential sheet number of the drawings (if the title sheet does not have a sheet number, it shall be '0000')

c. Similar folders shall be created in the DVD-Rs for the E, P, and H contracts

(4) Bid Set - Drawings (aka Design Drawings)

a. The first folder shall always be the Metadata Table. The other folders shall contain the entire set of original Design Drawings in bound AutoCAD and PDF/A formats. Numbers shall be used in the names for the folders so that they appear in the correct sequence. For example, the folders for a set of contract "G" drawings would look like this:

1 - Metadata – Contract WI-79G – Design Drawings

Metadata Table – ContractWI-79G– Design Drawings.xls

2 - Contract WI-79G – Design Drawings (AutoCAD)

3 - Contract WI-79G – Design Drawings (PDF/A)

b. In the Metadata Table and on the DVD-R, the file numbers for each drawing shall be:

"DES-Contract Number-####"

where "DES" = Design Drawings

and "Contract Number" = the specific contract number

and "####" = the original sheet number of the drawings (if the title sheet is unnumbered, it shall be '0000')

c. Similar folders shall be created in the DVD-R's for the E, P, and H contracts.

(5) Conformed Drawings

a. The first folder shall always be the Metadata Table. The other folders shall contain the entire set of Conformed Drawings in PDF/A and AutoCAD formats. Numbers shall be used in the names for the folders so that they appear in the correct sequence. For example, the folders for a set of contract "G" drawings would look like this:

1 - Metadata – Contract WI-79G – Conformed Drawings

Metadata Table - ContractWI-79G– Conformed Drawings.xls

2 - Contract WI-79G– Design Drawings (AutoCAD)

3 - Contract WI-79G– Design Drawings (PDF/A)

b. In the Metadata Table and on the DVD-R, the file numbers for each drawing shall be:

"CONF-Contract Number-####"

where "CONF" = Conformed Drawings

and "Contract Number" = the specific contract number

and "####" = original sequential sheet number of the drawings (the title sheet shall be '0000')

c. Similar folders shall be created in the DVD-R's for the E, P, and H contracts

(6) Final Copy Shop Drawings (FCSD)

a. The first folder shall always be the Metadata Table. The other folders shall contain the entire set of Final Copy Shop Drawings in PDF/A and AutoCAD formats. In the PDF/A file for each FCSD, all supporting documentation shall be included as part of the file. Numbers shall be used in the names for the folders so that they appear in the correct sequence. For example, the folders for a set of contract "G" drawings would look like this:

1 - Metadata – Contract WI-79G– Final Copy Shop Drawings

Metadata Table - ContractWI-79G– Final Copy Shop Drawings.xls

2 - Contract WI-79G– Final Copy Shop Drawings (PDF/A)

3 - Contract WI-79G– Final Copy Shop Drawings (AutoCAD)"

b. In the Metadata Table and on the DVD-R, the file numbers for each drawing shall be:

"FCSD-Contract Number-XXXXX-####"

where "FCSD" = Final Copy Shop Drawing

and "Contract Number" shall be the specific contract number

and "XXXXX" = the Specification Section Number that correlates to the FCSD (i.e. 16221)

and "####" = the sequential number of the drawing submitted for that specific Section.

c. Similar folders shall be created in the DVD-R's for the E, P, and H contracts

(7) Bid Set – Specifications (Including Addenda)

a. For a multi-contract project, the "G" Contractor shall archive the entire set of Bid Set of Contract Specifications (including the Detailed Specifications for the "G", "E", "H", and "P" contracts) and including all Addenda. The "E", "P", and "H" Contractors are only required to archive their respective Detailed Specifications.

b. For a project with a single contract, The Contractor shall conform to the requirements for a "G" contractor and the requirements for ""E", "P", and "H" Contractors will not be applicable.

c. The Specifications and Addendum shall be archived in PDF/A format as follows:

i. The preferred method or archiving is to use the original PDF files distributed as part of the Bid Set. If the Contractor does not have them, he should request them from Engineer.

ii. If for some reason the original PDF files are not available, the paper copies shall be scanned in as PDF files.

d. The first folder shall always be the Metadata Table.

e. For the "G" Contract:

i. The other folders shall contain the entire set of original Bid Specifications and Addenda. The Conformed set of Specifications should also be included. Numbers shall be used in the names for the folders so that they appear in the correct sequence. For example, the folders and subfolders for a set of contract "G" Bid Specifications would look like the following:

1 - Metadata – Contract WI-79G– Bid Specifications & Addenda

Metadata Table – Contract WI-79G– Bid Specifications and Addenda.xls

2 - Contract WI-79G– Bid Specifications (PDF/A)

a. BidSpec-WI-79G-V1of3.pdf

b. BidSpec-WI-79G-V2of3.pdf

c. BidSpec-WI-79G-V3of3.pdf

3 - Contract WI-79G– Addenda (PDF/A)

a. Addend-WI-79G-1of2.pdf

b. Addend-WI-79G-2of2.pdf

4 - Contract WI-79G– Conformed Specifications (PDF/A)

a. ConformedSpec-WI-79G-V1of3.pdf

b. ConformedSpec-WI-79G-V2of3.pdf

c. ConformedSpec-WI-79G-V3of3.pdf

ii. Each subfolder (i.e. in this example the subfolders are 2a, 2b, 2c, 3a, and 3b shall contain a single PDF/A file with the all the material for that category. If possible, the PDF/A file shall be bookmarked in such manner that the bookmarks are linked to the major chapters of each Volume.

iii. In the Metadata Table and on the DVD-R, the file numbers for these files shall be:

Bid Spec-Contract Number-V#of#" or

Addend-Contract Number-#of#"

where "Bid Spec" = Bid Specifications or

"Addend" = Addendum

and "Contract Number" = the specific contract number

and V#of# = the volume number of the Contract Specification book or

#of# = the number of the Addendum issued

f. For the "E" "P" and "H" Contracts

i. The other folders shall contain only the Detailed Specifications for that Contract. Numbers shall be used in the folder names so that they appear in the correct sequence. For example, the folders and subfolders for a set of contract "E" Bid Specifications would look like this:

1 - Metadata – Contract WI-79E – Detailed Specifications

2 - Contract WI-79E– Detailed Specifications (PDF/A)"

ii. In the Metadata Table and on the DVD-R, For example, the folders and subfolders for a set of contract "E" Bid Specifications would look like the following:

1 - Metadata – Contract WI-79E– Bid Set - Detailed Specifications

Metadata Table - ContractWI-79E– Bid Set Detailed Specifications.xls

2 - Contract WI-79E – Bid Set -Detailed Specifications (PDF/A)

a. BidSpec- WI-79E-001.pdf

(8) O&M Manuals

a. Electronic copies of each O&M Manual shall be furnished in PDF/A format on DVD-Rs which shall be inserted in a sleeve inside the binder for each copy of an O&M Manual. Two additional copies the DVD-Rs for each O&M Manual shall also be furnished. In addition, a compilation DVD-R Volume including all the O&M Manuals furnished shall be provided as specified below.

b. The first folder shall always be the Metadata Table. The other folder shall contain the O&M Manuals. There shall be a subdirectory for each O&M Manual. The subdirectories shall include the name of the O&M Manual. Each O&M Manual shall be a single complete PDF/A file. The PDF/A File should be bookmarked for the major chapters so that each bookmark is linked to the start of that chapter. Numbers shall be used in the names for the folders so that they appear in the correct sequence. For example, the folder structure for a set of contract "G" O&M Manuals would look like this:

1 - Metadata – Contract WI-79G– O&M Manuals

MetadataTable-ContractWI-79G– O&M Manuals.xls

2 - Contract WI-79G– O&M Manuals (PDF/A)

O&M Manual No. 1 - Diesel Generator Set

O&M01- WI-79G-16442.pdf

O&M Manual No. 2 – Slide Gates

O&M02- WI-79G-11245.pdf

c. In the Metadata Table and on the DVD-R, the file numbers for O&M files shall be :

"O&M#-Contract Number-#####"

where "O&M#" = the sequential number of the specific O&M Manual starting with 01.

and "Contract Number" = the specific contract number

and "#####" = the number of the Specification Section that correlates to the O&M Manual.

d. The Metadata Table shall list all the O&M Manuals furnished for the Contract.

e. Similar folders shall be created in the DVD-Rs for the E, P, and H contracts

(9) Key Documents

a. The first folder shall always be the Metadata Table. The other folder shall contain all the Key Documents. There shall be a subdirectory for each Key Document. The subdirectory shall include the name or description of the Key document. Each Key Document shall be a single complete PDF/A file. For example, the folders for a set of contract "G" Key Documents would look like this:

1 - Metadata – Contract WI-79G– Key Documents

MetadataTable-ContractWI-79G– Key Documents.xls

2 - Contract WI-79G– Key Documents (PDF/A)

Key Documents 1 – Signed Pages from Standard Construction Contract

Key Doc- WI-79G-001.pdf

Key Documents 2 – Award Folder Contents

KeyDoc- WI-79G-002.pdf

b. In the Metadata Table and on the DVD-R, the file numbers for the Key Documents files shall be:

"KeyDoc-Contract Number-###"

where "KeyDoc" = Key Document

and "Contract Number" = the specific contract number

and "###" = the sequential number of the specific Key Document starting with 01

c. Similar folders shall be created in the DVD-Rs for the E, P, and H contracts

(10) Job Photographs (when required)

a. Digital photographs should be in TIFF or JPEG format.

b. The first folder shall always be the Metadata Table. The other folders shall be organized as shown below. For example, the folders for a set of contract "G" Job Photographs would look like this:

1- Metadata – Contract WI-79G– Job Photographs

MetadataTable-ContractWI-79G– Job Photographs.xls

2- Contract WI-79G– Job Photographs – Pre-Construction (TIFF)

3- Contract WI-79G– Job Photographs – Construction (TIFF)

4- Contract WI-79G– Job Photographs – Post-Construction (TIFF)"

c. In the Metadata Table and on the DVD-R, the file numbers for Job Photographs files shall be:

"JobPhoto- PreCon-Contract Number-#####"

"JobPhoto- Con-Contract Number-#####"

"JobPhoto- PostCon-Contract Number-#####"

where "JobPhoto"" = Job Photograph

and "Contract Number" = the specific contract number

and "PreCon" = Pre-Construction

and "Con" = Construction

and "PostCon" = Post-Construction

and "#####" = the sequential file number of all photos

(11) Job Videos (when required)

a. Digital videos should be in MPEG2 format as specified in Detailed Specification 01323 - Job Photographs and Videos.

b. The first folder shall always be the Metadata Table. The other folders shall be organized as shown below. For example, the folders for a set of contract "G" Job Photographs would look like this:

1- Metadata – Contract WI-79G– Job Videos

MetadataTable-ContractWI-79G– Job Videos.xls

2- Contract WI-79G– Job Videos – Pre-Construction (MPEG 2)

3- Contract WI-79G– Job Videos – Construction (MPEG 2)

4- Contract WI-79G– Job Videos – Post-Construction (MPEG 2)

5- Contract WI-79G – Job Videos – Informational (MPEG 2)

c. In the Metadata Table and on the DVD-R, the file numbers for Job Photographs files shall be:

"JobVideo- PreCon-Contract Number-#####"

"JobVideo- Con-Contract Number-#####"

"JobVideo- PostCon-Contract Number-#####"

"JobVideo- Informational-Contract Number-#####"

where "JobVideo"" = Job Video

and "Contract Number" = the specific contract number

and "PreCon" = Pre-Construction

and "Con" = Construction

and "PostCon" = Post-Construction

and "Informational" = Information

and "#####" = the sequential file number of the Video

(12) Additional Documents

a. The first folder shall always be the Metadata Table. The other folders, shall be containing each individual set of Additional Documents as a single PDF/A file. The PDF/A File shall be bookmarked for the major chapters so that each bookmark is linked to the start of that chapter. For example, the folders for a set of contract "G" Additional Documents would look like this:

1 - Metadata – Contract WI-79G– Additional Documents

MetadataTable-ContractWI-79G– Additional Documnets.xls

2 - Contract WI-79G– Additional Documents (PDF/A)

Additional Document 1 – Soil Classification Reports

AddDoc-WI-79G-001.pdf

Additional Document 2 – Environmental Impact Study

AddDoc- WI-79G-002.pdf

b. In the Metadata Table and on the DVD-R, the file numbers for Additional Documents files shall be:

"AddDoc-Contract Number-###"

where "AddDoc"" = Additional Document.

and "Contract Number" = the specific contract number

and "###" = the sequential number of the specific Additional Document starting with 01

R-1.18 MEASUREMENT AND PAYMENT

Payment for this work shall be deemed to be included in the unit price bid for all scheduled items.

SAMPLE DVD-R LABEL

S - PAGES

SPECIAL PROVISIONS

NOTICE

THE PAGES CONTAINED HEREIN (S-PAGES) ARE SPECIAL PROVISIONS THAT SHALL APPLY TO AND BECOME A PART OF THE CONTRACT.

(NO TEXT ON THIS PAGE)

TABLE OF CONTENTS

ARTICLE	DESCRIPTION	PAGE NO.
A.	CONTRACT DRAWINGS	S-1
B.	MINIMUM QUALIFICATIONS OF CONTRACTOR/ SUBCONTRACTOR	S-1
C	START OF CONTRACT WORK	S-1
D.	WORK TO PROCEED WITH DILIGENCE AND DISPATCH	S-1
E.	WORK FORCE	S-2
F.	LINES AND GRADES	S-2
G.	SPECIFIC TRAFFIC STIPULATIONS	S-3
H	HOLIDAY CONSTRUCTION EMBARGO	S-3
I.	CURB WORK	S-4
J	NEW CURB AND SIDEWALK AT EXISTING TREES	S-4
K.	EXISTING OBSTRUCTIONS	S-4
L.	CITY-OWNED STREET HARDWARE ADJUSTMENTS IN ROADWAY AREAS	S-4
M.	CITY-OWNED STREET HARDWARE ADJUSTMENTS IN SIDEWALK AREAS	S-5
N.	PRIVATE UTILITY HARDWARE ADJUSTMENTS	S-5
O.	DISPOSAL OF EXCESS EXCAVATED MATERIAL BY THE CONTRACTOR AT A SITE DESIGNATED BY THE CONTRACTOR	S-5
P.	SURVEY MONUMENTS	S-5
Q.	CORRECTIVE MILLING	S-5
R.	RESTORATION OF ADJACENT AREAS	S-6
S.	CLEANING OF DRAINAGE STRUCTURES	S-6
T.	FUEL COST	S-6
U.	USE OF CITY WATER	S-6

ARTICLE	DESCRIPTION	PAGE NO.
V.	ITEM NO. "6.52" AND WORDS "FLAGGER", "FLAGGERS" AND "FLAGPERSON"	S-6
W.	REFER TO THE CONTRACT DRAWINGS	S-6
X.	DPR CONSTRUCTION PERMIT	S-7
Y.	PRICES TO INCLUDE	S-7
Z.	TIMES IS OF THE ESSENCE	S-7
AA.	LOCATIONS OF WORK	S-7
AB.	DEFINITION	S-8
AC.	COMPACTION TESTING OF SIDEWALK FOUNDATION MATERIAL	S-8
	OCMC TRAFFIC STIPULATIONS	S-10
	OCMC TRAFFIC STIPULATIONS – AMENDMENT #1	S-13
	CITYWIDE SITING CRITERIA FOR GREEN INFRASTRUCTURE	S-18
	NYC DOT GREEN INFRASTRUCTURE DESIGN GUIDELINES	S-20
	INTERPRETIVE MEMORANDUM # 2	S-38

SPECIAL PROVISIONS

A. CONTRACT DRAWINGS. In addition to the details shown on the Contract Drawings the Contractors attention shall include, but are not limited to, the following:

NEW YORK CITY DEPARTMENT OF ENVIRONMENTAL PROTECTION BUREAU OF ENGINEERING DESIGN AND CONSTRUCTION - GREEN INFRASTUCTUTE STANDARD DESIGNS AND GUIDELINES FOR GREEN INFRASTRUCTURE PRACTICES (Available on-line at:

http://www.nyc.gov/html/dep/pdf/green_infrastructure/bioswales-standard-designs.pdf

B. MINIMUM QUALIFICATIONS OF CONTRACTOR/SUBCONTRACTOR The Contractor and/or its proposed subcontractor shall have performed at least one (1) contract in seven (7) years that involved natural area restoration and/or construction of Green Infrastructures such as bioswales, greenstrips, infiltration basins, greenstreets, and rain gardens.

To support the Contractor's contention that the it or its proposed subcontractor are qualified to perform the work involving the installation of Green Infrastructure, the Contractor must provide the following information in a Statement of Qualifications with their bid:

Provide specific details on projects (i.e. location, size, cost, client, etc.). Provide client contact person's name and telephone number. Describe any problems encountered during construction and corrective action taken to remedy the problem. Describe any violations issued by NYSDEC or any other regulatory agency. How were the violations resolved? Provide chronological photos recording the progress from preconstruction through completion. Include any required sign-offs from client.

C. START OF CONTRACT WORK. The Contractor is notified that a Notice To Proceed (NTP) date will be issued for work to commence within 21 to 30 Days of Contract Registration. The Contractor shall have an average production rate of 1,000 S.F., of constructed Green Infrastructure per week. In the event the Contractor fails to complete all required services set forth in the Work Order within the specified time frame, liquidated damages shall be assessed on a daily basis in the amount specified in Schedule A on Page SA-1.

D. WORK TO PROCEED WITH DILIGENCE AND DISPATCH. Timely completion of the Work of this Contract is critical to the completion of the milestone established in the Schedule A. Therefore, it is agreed that all Work hereunder shall be executed at such time(s) and in or on such parts of the Contract and with sufficient work force(s), materials, and equipment, so as to assure timely Substantial completion of the work as well as the swift completion of all Work hereunder.

The Contractor is required to prepare a Progress Schedule in accordance with Article 9 of the Standard Construction Contract and the Substantial Completion date will be determined in

accordance with Article 14 of the Standard Construction Contract. The Date of Final Acceptance will be determined when all work is final and complete in accordance with Article 14 of the Standard Construction Contract.

E. WORK FORCE. The Engineer shall periodically assess the rate of progress and may order the Contractor to mobilize additional work crews to complete the work on time. If the Contractor fails to comply with such orders within seven (7) calendar days after the written notice from the Engineer, the Contractor may, under Article 48 of the Standard Construction Contract, be declared in default of this contract.

F. LINES AND GRADES. The Contractor shall furnish lines and grades in accordance with Section 1.06.27 of the Standard Highway Specifications. The Contractor shall check with the Topographic Section of the Borough President's Office as to the reliability and accuracy of the data to be used for lines and grades.

Where new curbs and sidewalks are designated to be constructed in locations where they do not currently exist, the Contractor shall be required to establish lines and grades and stake out and layout the work for installing the new sidewalks and malls, as per Section 6.41 of the Standard Highway Specifications. In addition, at the completion of the work the Contractor shall survey the entire area of new construction, including the adjoining side streets, to provide the Engineer with as-built locations and elevations at the top and bottom of the curbs, at the ends of construction, at all street hardware, and breaks in grades.

Unless indicated otherwise, elevations indicated or specified refer to the North America Vertical Datum of 1988 (NAVD 88) for vertical data.

Unless indicated otherwise, coordinates indicated or specified refer to the North American Datum (NAD 83) StatePlane New York, Long Island FIPS 3104 Feet for horizontal data.

In addition the Contactor shall be required to do the following:

a) The Contractor shall retain the services of a New York State Licensed Land Surveyor for the purposes of establishing the location of R.O.W. Bioswales, R.O.W. Rain Gardens, R.O.W. Greenstrips, R.O.W. Infiltration Basins and R.O.W. Stormwater Greenstreets before construction and establishing the final constructed location (As-Built) coordinates as referenced in Section 1.19.

b) Lines and grades. All work shall be constructed according to the lines and grades shown on the Contract Drawings and as approved by the Engineer.

c) The Engineer will establish a base line and bench mark.

d) The Contractor shall establish all other lines, elevations and grades required for the work and be solely responsible for the accuracy thereof.

e) The Contractor shall install a Survey Nail at the upstream corner of every Green Infrastructure Practice constructed. The Survey Nail shall be placed in the center of the curb, lined up with the edge of the header. The Survey Nail shall be used to

establish the final coordinates of the Green Infrastructure Practice (Northing and Easting).

f) The Engineer shall be notified prior to the establishment of any line, elevation or grade.

g) Safeguarding marks. The Contractor shall safeguard all points, stakes, grade marks, monuments, and bench marks made or established on the work, re-establish same if disturbed and bear the entire expense of rectifying work improperly installed due to not maintaining, not protecting or removing without authorization such established points, stakes, marks, and monuments.

G. SPECIFIC TRAFFIC STIPULATIONS. The Contractor shall perform the work in strict accordance with the requirements of Section 6.70-GI of Standard Highway Specifications, the Maintenance and Protection of Traffic contract drawings, the Office of Construction Management Coordination (OCMC) traffic stipulations attached to the end of these Special Provisions, and the directions of the Engineer. In case of a conflict, the Engineer's directions shall govern.

Any maintenance and protection of traffic device (e.g. planking with hand rails, metal ramps, wooden steps, roadway plates, traffic cones, temporary pavement markings, flags, etc.) not provided in the bid schedule but deemed necessary to comply with the requirements of Section 6.70- GI shall be deemed to be included in the unit prices bid for all of the scheduled contract items.

H. HOLIDAY CONSTRUCTION EMBARGO. A special Holiday Construction Embargo shall be in effect on the Friday of the week preceding Thanksgiving Day week from 6:00 AM to 11:59 PM and again from the Monday of Thanksgiving Day week from 6:00 AM through January 2, at 11:59 PM. Roadway and sidewalk construction activities will be restricted during the embargo period on the streets listed below*.

Any permits issued prior to the date of this notice, for work during this embargo period on the streets listed below which do not already have the permit stipulation "410" are hereby suspended for the period noted above. All permittees must comply with this embargo unless a special waiver is granted by OCMC. Waiver requests must be filed at least thirteen days before Thanksgiving Day, in the Permit Office by filing a "Request for Roadway/Sidewalk Permits During Embargo Periods" and submitting supporting documentation. Waiver requests should only be submitted for critical reasons for a specific project. If a waiver is granted, the applicant will be notified so they can apply for the approved permits. Waivers **are not** required for ongoing Building Construction Activity Permits which already include the "410" permit stipulation. Waiver request forms may be obtained at any Permit Office or on the Department of Transportation's website at: http://www.nyc.gov/html/dot/downloads/pdf/holidayembapp.pdf

Prior to this embargo period all necessary measures must be taken so that all roadways and sidewalks are in proper condition to allow for the expeditious and safe movement of vehicular, bicycle and pedestrian traffic. Tool carts, cable reels, containers, and material stored on roadways must be removed during the embargo period.

The opening of utility access covers is prohibited on any of the streets noted below between the hours of 6:00 AM and midnight unless the utility or Contractor files for an Emergency Authorization Number as required by section 2-07 of the Department of Transportation's Highway Rules. The planned opening of utility access covers may occur during the hours of 12:01 AM and 5:59 AM where no authorization number is required.

Temporary restoration of the streets and sidewalks and removal thereof, if required for the Holiday Embargo period, will be paid for under the appropriate scheduled items.

No extension of time due to the shutdown period will be granted to the Contractor for completion of the work.

I. CURB WORK. Where steel faced concrete curb is required to be installed, the curb adjacent to the concrete aprons shall be depressed and transitional as required and shall be paid for under Item 4.09 BD, Depressed Steel Faced Concrete Curb.

J. NEW CURB AND SIDEWALK AT EXISTING TREES. At locations where the Contractor is working adjacent to existing trees designated to remain where the tree roots may interfere with standard installation of curb or sidewalk, the Contractor shall utilize Items 8.02 A and 8.02 B, as advised by the NYC DPR approved Tree Consultant and as directed by the Engineer, in order to mitigate construction trauma to trees. Existing tree pit size may be enlarged, where and as ordered by the Engineer, in order not to damage tree roots.

K. EXISTING OBSTRUCTIONS. The Contractor shall excavate existing abandoned lamppost base, traffic post base, , etc., down to the bottom of the Green Infrastructure within the work area. Payment for this work will be made under Item GI-4.02. The Contractor shall coordinate and obtain the required permits from the owning agency.

The Contractor shall relocate existing drive-rail posts and the attached signs, such as street name signs, traffic signs, etc., where indicated or directed, to a nearby area just beyond the limits of the Green Infrastructure as directed by the Engineer. Payment for this work will be made under the appropriately scheduled contract items. The Engineer will notify the responsible City Agency or private entity having jurisdiction over these signs.

L. CITY-OWNED STREET HARDWARE ADJUSTMENTS IN ROADWAY AREAS. Where adjustment of street hardware, such as catch basin gratings, manholes, and valve boxes, is required in the roadway to facilitate Green Infrastructure work as shown on the Contract Drawings, the adjustment will be paid for under Item 6.36 DR.

*** Please note that this embargo only applies to NYCDOT construction permits.**

*** List of street and maps of the affected locations are available by borough on the Department of Transportation's website at:**
http://www.nyc.gov/html/dot/html/motorist/trafalrt.shtml

M. CITY-OWNED STREET HARDWARE ADJUSTMENTS IN SIDEWALK AREAS. Where adjustment of street hardware, such as manholes, valve boxes, box covers, monuments, etc., is required in the sidewalk to facilitate Green Infrastructure work, payment is deemed included in the prices bid for all scheduled contract items where the vertical movement is less than or equal to 6" down, or where the vertical movement is less than or equal to 12" upward. However, where the vertical movement of street hardware is more than 6" downward or more than 12" upward, then the adjustment work will be paid for under Item 6.36 DR.

Vertical adjustment of each installation and resetting the castings shall consist of: removing the existing frame and cover, and granite slab where applicable; modifying the existing installation as required; replacing the frame and/or cover if damaged, as determined by the Engineer, with a new frame and/or cover furnished under Item 6.22 F; resetting granite slab where applicable; and, setting the frame and cover to the new sidewalk elevation and slope.

Materials used shall comply with the Department's Sewer Standards for drainage installations, and the appropriate Department having jurisdiction over other installations.

Resetting castings shall be done with brick and mortar according to the standards of the Department of Environmental Protection or the appropriate Department having jurisdiction over the installation. Work shall be done in a workmanlike manner, and any damage resulting from the Contractor's operations, to the existing installation which is to remain, shall be satisfactorily corrected, as directed by the Engineer, at the Contractor's own expense and at no additional cost to the City. Removed and damaged sidewalk shall be replaced in kind.

N. PRIVATE UTILITY HARDWARE ADJUSTMENTS will be performed by the owning utility company or its agent, at its expense. The Contractor shall notify the utility company at least seventy-two (72) hours prior to start of work at each location where its hardware requires adjustment.

O. DISPOSAL OF EXCESS EXCAVATED MATERIAL BY THE CONTRACTOR AT A SITE DESIGNATED BY THE CONTRACTOR. Excess material excavated by the Contractor becomes the Contractor's property and is to be properly disposed of at the Contractor's expense.

P. SURVEY MONUMENTS. When working in the vicinity of survey monument the Contractor shall hand excavate under Item 8.02 A at City Survey Monuments, for a distance of five (5) feet around each monument, as directed by the Engineer.

Q. CORRECTIVE MILLING. Where directed by the Engineer and prior to construction of sidewalks, the Contractor shall install a pavement key, under Item 6.51 GI-BD, at Green Infrastructure locations and other locations as directed. Unless otherwise directed, the milling area shall generally be 3' to 6' wide adjacent to the new curb and 2"± deep. The purpose of milling is to remove uneven wearing course, facilitate surface storm water run-off, and prepare for resurfacing after completion of the concrete work.

Resurfacing, under Item 4.02 AF-R, over the milled area shall be approximately 2"± deep. Where ponding remains after resurfacing, no payment will be made for any work at that location unless the ponding condition is corrected in a manner satisfactory to the Engineer.

R. RESTORATION OF ADJACENT AREAS. The Contractor shall be required to remove all form work. In planting strip areas, the Contractor shall be required to restore areas damaged as a result of its operations, to the satisfaction of the Engineer, with sod. The Contractor shall also, as directed by the Engineer, make safe adjacent areas to his work, such as: restoring missing or damaged pavement markings that were removed or damaged as a result of the Contractor's operations (as per requirements of Section 6.44 in the Standard Highway Specifications); resetting granite blocks in tree pits; and, applying asphaltic concrete mixture (under Item 4.02 CB) where badly broken sidewalk or curb may create a dangerous condition just outside the area of operation, where and when directed by the Engineer.

All restoration work shall be done to the satisfaction of the Engineer.

S. CLEANING OF DRAINAGE STRUCTURES. The Contractor shall be required to keep all existing drainage structures within the work area clean and operable at all times. Should the Contractor let debris enter any drainage structure as a result of its operations, it shall be required to immediately clean that drainage structure at its own expense. All other drainage structures requiring cleaning shall be referred to the Department of Environmental Protection.

T. FUEL COST. The Contractor is notified that fuel cost per gallon used in the formula under Sub-Article 26.2.8 of the Standard Construction Contract for Extra Work will be derived from the fuel price index for the United States East Coast published weekly by the United States Energy Information Administration ("USEIA"), and available on its website at http://www.eia.gov/petroleum/gasdiesel/. The USEIA-published cost per gallon for the applicable fuel on the East Coast for the week in which the first day of each calendar quarter during the contract term occurs (i.e., January 1st, April 1st, July 1st and September 1st) will be used in the reimbursement formula for all Extra Work invoiced that was performed during that calendar quarter. Should the USEIA stop publishing this fuel price index, the fuel cost per gallon will be determined by reference to a substitute index to be agreed upon by the Contractor and the City.

U. USE OF CITY WATER The Contractor is notified that use of city water under this project the Contractor shall be required to obtain all necessary permits from the Department of Environmental Protection, at no cost to the Contractor in accordance with the NYC Department of Environmental Protection, Standard Sewer and Water Main Specifications, dated July 1, 2014, Section 12.04 "TEMPORARY USE OF CITY WATER ON CONSTRUCTION PROJECTS".

V. ITEM NO. "6.52" AND WORDS "FLAGGER", "FLAGGERS" AND "FLAGPERSON" . The Contractor is notified that the Contract Drawings, Sketches, the OCMC Traffic Stipulations, and Section 6.70 - GI of the I-Pages (Book 3 of 3) it shall mean the Item No. "6.52 CG" and the words "Crossing Guard", respectively.

W. REFER TO THE CONTRACT DRAWINGS, STANDARD DESIGN AND GUIDELINES FOR GREEN INFRASTRUCTURE PRACTICES, Standard Detail GI-202 Note (2) and Standard Detail GI-203 Note (3); change the word "PVC" to "HDPE" in Note (2) and Note (3), respectively. Refer to Standard Detail GI-204, the use of the 80mil HDPE Barrier as

shown on the Utility Crossing Detail is required only when noted on the Contract Drawing Plans or when directed by the Engineer.

X. DPR CONSTRUCTION PERMITS are required for all work on parkland or on sidewalks adjacent to parks or other areas maintained by DPR. Work shall not commence without obtaining the necessary permit.

Y. PRICES TO INCLUDE. No direct payment will be made for costs incurred in complying with the foregoing Special Provisions, unless otherwise provided. Said costs will be deemed to have been included in the prices bid for all the scheduled contract items.

Z. TIME IS OF THE ESSENCE. This contract is critical to meeting the required percentage of impervious surface managed milestone for 2020, which is the subject of a State consent decree to which both the New York City Department of Environmental Protection and the New York State Department of Environmental Conservation are parties. It is understood and specifically agreed by the Contractor, that time is of the essence in the performance of the Work under this Contract. The Contractor expressly agrees that they shall commence, proceed with, and finish construction under this Contract so that Substantial Completion is achieved in all respects within the specified time for completion and any and all remaining Work hereunder is completed promptly thereafter. The Contractor's attention is directed particularly to Schedule A and to the Detailed Specifications.

AA. LOCATIONS OF WORK. Work under this contract shall be performed at various locations in the right-of-way within the Borough generally a neighborhood or multiple neighborhoods.

The Contractor is advised that no minimum quantity of Green Infrastructure practices or other items under this contract are guaranteed.

The Contractor is hereby notified that the locations selected for this contract may be generally be along heavily traveled pedestrian routes with a minimal amount of locations in low density residential areas.

NOTE: THE DEPARTMENT OF DESIGN AND CONSTRUCTION RESERVES THE RIGHT TO EITHER:

a) Delete any locations if funding is insufficient to complete all of this work.

b) Delete any location where any one of the following are required: relocation of lamppost, traffic signals, hydrant, or catch basin; a vault structure interferes with construction of ramp; Transit Authority structure interferes with construction; or, a distinctive sidewalk has to be installed.

c) Delete any item of work where directed by the Engineer.

The Contractor's attention is called to the fact that the Engineer's Estimate is approximate only and no claim shall be made against the City for loss of anticipated profits for items of work not performed or locations deleted from the contract.

Guaranteed Minimum: In the event the Contractor is not directed to perform any services hereunder, the City agrees to pay, and the Contractor agrees to accept, a minimum fee of $2,000. The Contractor further agrees that under such circumstances, it has no action for damages or for loss of profits against the City. In addition, if no services are ordered, the City agrees to reimburse the Contractor the actual and reasonable cost of required performance and payment bonds, with no mark up for overhead and profit. In its request for reimbursement, the Contractor shall provide a copy of the cancelled check for the required bonds, as well as any other documentation required by the Commissioner.

AB. DEFINITION. Green Infrastructure practices as defined for this contract shall consist of Right of Way (R.O.W.) Bioswales, R.O.W. Rain Gardens, R.O.W. Greenstrips, R.O.W. Infiltration Basins and Stormwater Greenstreets, each of which shall be installed where and when directed.

Green Infrastructure practices are rainwater management systems installed in the existing right of way to capture and manage stormwater via a curb inlet that allows stormwater to flow in and a curb outlet to allow excess stormwater to flow back out along the gutter. The R.O.W. Green Infrastructure practices are situated within the sidewalk and have variable lengths parallel to the curb line and variable widths perpendicular to the curb line. The Contractor is referred to NYC Departemnt of Environmental Protection Bureau of Engineering Design and Construction - Green Infrastructure's latest *Standard Designs and Guidelines for Green Infrastructure Practices* , the specifications and contract drawings for more detail.

A Stormwater Greenstreet (SGS) is a rainwater management system installed in the existing right of way to capture and manage stormwater via curb inlet(s) that allow stormwater to flow in and a curb outlet to allow excess stormwater to flow back out along the gutter. SGSs have variable lengths parallel to the curb line and variable widths perpendicular to the curb line. They are situated within the roadway adjacent to the curb and in the sidewalk. The Contractor is referred to NYC Departemnt of Environmental Protection Bureau of Engineering Design and Construction - Green Infrastructure's latest *Standard Designs and Guidelines for Green Infrastructure Practices*, the specifications and contract drawings for more detail.

AC. COMPACTION TESTING OF SIDEWALK FOUNDATION MATERIAL. The Contractor is required to spot test to verify that their method of compacting the sidewalk foundation material, achieves the required density.

The test shall be conducted by a properly calibrated Nuclear testing device. The operator shall be a technician certified in its operation, as approved by the Engineer. Three spot tests will be required at each Green Infrastructure, unless a test result indicates that the minimum compaction was not achieved, in which case additional testing may be required by the Engineer.

The Contractor is required to obtain a minimum of 95% of the theoretical maximum density for all sidewalk foundation material installed. The theoretical maximum density shall be obtained, also by Contractor, by the use of another test such as Procter Test, as directed by the Engineer.

A copy of all nuclear density monitoring results including date, time, location by distance and offset, from building line or curb line, and the theoretical maximum density reading and any pertinent remarks is to be delivered to the Engineer the same day.

NEW YORK CITY Department of Transportation

JANETTE SADIK-KHAN, Commissioner

OCMC TRAFFIC STIPULATIONS

November 21, 2013

OCMC FILE NO: CEC-13-533
CONTRACT NO: ALL BIOSWALE CONTRACTS, CITYWIDE
PROJECT: BIOSWALE INSTALLATION, CITYWIDE
LOCATION(S): VARIOUS, CITYWIDE

PERMISSION IS HEREBY GRANTED TO ENTER UPON AND RESTRICT THE FLOW OF TRAFFIC AT THE ABOVE LOCATION AND ITS LOCAL ADJACENT STREETS FOR THE PURPOSE OF CARRYING OUT THE ABOVE NOTED PROJECT, SUBJECT TO THE STIPULATIONS, AS NOTED BELOW:

A. **SPECIAL STIPULATIONS**

1. **EMBARGOES** – A CONSTRUCTION EMBARGO WILL APPLY TO THOSE LOCATIONS BELOW WHICH FALL WITHIN THE **HOLIDAY EMBARGO** OR ANY OTHER SPECIAL EVENT EMBARGOES AS PUBLISHED BY THE BUREAU OF PERMIT MANAGEMENT AND CONSTRUCTION CONTROL.
2. **BIKE LANES** – IF WORK IS IN OR AFFECTING A BIKE LANE, THE CONTRACTOR MUST POST ADVANCE WARNING SIGNS 350 FEET AND 200 FEET PRIOR TO THE WORK ZONE STATING **"CONSTRUCTION IN BIKE LANE AHEAD PROCEED WITH CAUTION"**, AND ALSO POST A SIGN AT THE WORK ZONE STATING **"CONSTRUCTION IN BIKE LANE PROCEED WITH CAUTION"**. SUCH SIGNS SHALL BE ORANGE, 3' X 3', DIAMOND-SHAPED WITH 4" BLACK LETTERING. SIGNS SHALL BE POSTED IN ACCORDANCE WITH THE FEDERAL MANUAL ON UNIFORM TRAFFIC CONTROL DEVICES (MUTCD).
3. **BIKE SHARE STATIONS:** THE PERMITTEE SHALL NOT REMOVE, RELOCATE, DAMAGE OR DISRUPT THE OPERATION OF EXISTING BIKE SHARE STATIONS WITHOUT FIRST CONTACTING NYC BIKE SHARE AT 855-245-3311 FOR THEIR REQUIREMENTS PRIOR TO COMMENCING WORK.
4. **BUS STOPS** – THE CONTRACTOR SHALL PROVIDE WRITTEN NOTICE TO NYC DOT OCMC AND NEW YORK CITY TRANSIT (NYCT) A MINIMUM OF FIVE (5) WEEKS IN ADVANCE FOR LANE/STREET CLOSURES THAT AFFECT BUS ROUTES/BUS STOPS.
5. **STREET LIGHTS / TRAFFIC SIGNALS:** THE PERMITTEE SHALL NOT REMOVE OR RELOCATE EXISTING STREET LIGHTS OR TRAFFIC SIGNALS WITHOUT FIRST OBTAINING APPROVAL FROM NYCDOT STREET LIGHTING / TRAFFIC SIGNALS UNIT.
6. **TRAFFIC CAMERAS, DETECTION/COMMUNICATION EQUIPMENT:** IF AT ANY TIME DURING THE APPROVED WORK, THE PERMITTEE ENCOUNTERS TRAFFIC SURVEILLANCE CAMERAS, DETECTION EQUIPMENT OR ANY TYPE OF COMMUNICATION EQUIPMENT (WIRELESS OR HARD-WIRED) ON ANY NYC DOT FACILITY, THAT IS NOT INCLUDED ON THE DESIGN/BUILD DRAWINGS, THE PERMITTEE SHALL IMMEDIATELY NOTIFY NYC DOT TRAFFIC MANAGEMENT BY PHONE AT 718-433-3390 OR 718-433-3340 AND VIA EMAIL AT TMC@DOT.NYC.GOV AND AWAIT DIRECTION PRIOR TO CONTINUING WORK.
7. **METERS** – THE PERMITTEE SHALL NOT REMOVE OR RELOCATE PARKING METERS WITHOUT FIRST OBTAINING APPROVAL FROM NYCDOT PARKING METER DIVISION AT 718-894-8651.
8. **TEST PITS** – THE BELOW TRAFFIC STIPULATIONS DO NOT APPLY TO TEST PIT WORK RELATED TO THIS CONTRACT. WORK HOURS AND OTHER REQUIREMENTS FOR TEST PIT OPERATIONS MAY DIFFER FROM THE STIPULATIONS IDENTIFIED BELOW. THE PERMITTEE SHALL BE REQUIRED TO OBTAIN SEPARATE PERMITS RELATED TO TEST PITS.
9. **ACCESS TO ABUTTING PROPERTIES** – THE PERMITTEE SHALL COORDINATE ALL ACTIVITIES WITH ABUTTING PROPERTY OWNERS TO ENSURE ACCESS IS PROVIDED TO/FROM ENTRANCES/DRIVEWAYS AT ALL TIMES.
10. **AUTHORIZED PARKING** – PRIOR TO PERFORMING WORK WHICH IMPACTS AUTHORIZED PARKING, THE PERMITTEE SHALL SUBMIT IN WRITING, AND COPY OCMC-STREETS, A REQUEST TO OCCUPY SPACE CURRENTLY USED BY AUTHORIZED VEHICLES. APPROVAL MUST BE RECEIVED FROM AUTHORIZED PARKING PRIOR TO OCCUPYING THESE AREAS.
11. **NOTIFICATION** – THE PERMITTEE MUST AT LEAST TWO (2) WORKING DAYS BEFORE THE START OF CONSTRUCTION NOTIFY THE NYC FIRE DEPARTMENT, NYC POLICE DEPARTMENT, NYCEMS, LOCAL COMMUNITY BOARD, BOROUGH PRESIDENT'S OFFICE-CHIEF ENGINEER, NYCDOT OCMC OFFICE, AND ALL ABUTTING PROPERTY OWNERS.
12. **STIPULATION CHANGES** – IF ANY OF THESE REQUIREMENTS, INCLUDING THE REQUIREMENTS LISTED BELOW, CANNOT BE MET, A REQUEST FOR MODIFICATIONS SHALL BE SUBMITTED IN WRITING TO OCMC-STREETS BY THE ENGINEER-IN-CHARGE FOR THE AGENCY PERFORMING THE WORK TO DETERMINE THE APPROPRIATE MAINTENANCE AND PROTECTION OF TRAFFIC.

NYC Department of Transportation
Bureau of Permit Management and Construction Control
55 Water Street - 7th Floor, New York, NY 10041
T: 212.839.9621 F: 212.839.8970
www.nyc.gov/dot

OCMC FILE NO: BNEC-13-533
CONTRACT NO: ALL BIOSWALE CONTRACTS, CITYWIDE
PROJECT: VARIOUS, CITYWIDE

B. MAINTENANCE AND PROTECTION OF TRAFFIC

DEFINITION: For the purposes of this traffic stipulation sheet, the term "Critical Roadways" shall pertain to those roadways listed in the NYCDOT Highway Rules, where work restrictions apply during specific hours of the day.

NON-CRITICAL ROADWAYS

ROADWAYS UP TO 44 FEET IN WIDTH:

- Working hours shall be as follows: 7:00 AM to 6:00 PM, Monday to Friday (9:00 AM to 2:00 PM, Monday to Friday if working within a school zone) and 8:00 AM to 4:00 PM Saturday.
- Should "No Standing" rush hour regulations apply adjacent to/or opposite the construction zone, work is restricted during the hours specified on the posted regulation. *OCMC-Streets should be contacted in writing by the engineer-in-charge only if they are requesting a waiver and consideration to work during the restricted hours.*
- A school variance (VAR001) is granted to work during school hours as stipulated by OCMC-Streets. The contractor must notify the school principal in writing 48 hours prior to beginning any work.
- During work hours, the contractor shall fully close the sidewalk and post signs meeting NYCDOT specifications for directing pedestrians to the opposite sidewalk.
- During working hours, the contractor shall maintain one 11-foot lane for traffic on one-way streets, and two 11-foot lanes for traffic, (one 11-foot lane in each direction) on two-way streets.
- After working hours, the contractor shall maintain either a minimum 5-foot clear sidewalk or a 5-foot protected pedestrian walkway in the roadway adjacent the work zone for pedestrians. Occupancy of no stopping zones, no standing anytime zones and authorized parking is prohibited. If a pedestrian walkway in the roadway is used, it shall be ramped at entry for handicapped access. All crosswalks must be opened to pedestrians.
- The contractor shall not work on opposite sidewalks/curbs simultaneously.

ROADWAYS 45 FEET OR GREATER IN WIDTH:

- Working hours shall be as follows: 7:00 AM to 6:00 PM, Monday to Friday (9:00 AM to 2:00 PM, Monday to Friday if working within a school zone) and 8:00 AM to 4:00 PM Saturday.
- Should "No Standing" rush hour regulations apply adjacent to/or opposite the construction zone, work is restricted during the hours specified on the posted regulation. *OCMC-Streets should be contacted in writing by the engineer-in-charge only if they are requesting a waiver and consideration to work during the restricted hours.*
- A school variance (VAR001) is granted to work during school hours as stipulated by OCMC-Streets. The contractor must notify the school principal in writing 48 hours prior to beginning any work.
- The contractor shall maintain shall maintain either a minimum 5-foot clear sidewalk or a 5-foot protected pedestrian walkway in the roadway adjacent the work zone for pedestrians. The pedestrian walkway shall be ramped at entry for handicapped access. Occupancy of no stopping zones, no standing anytime zones and authorized parking is prohibited.
- During working hours, the contractor shall occupy 11-feet of the roadway adjacent to the curb, including the pedestrian walkway, while maintaining one 11-foot lane for traffic on one way streets and two 11-foot lanes for traffic (one 11-foot lane in each direction) on two-way streets.
- After working hours, the contractor may occupy 8-feet adjacent to curb, including the pedestrian walkway, and all crosswalks must be opened to pedestrians. Occupancy of no stopping zones, no standing anytime zones and authorized parking is prohibited.
- The contractor shall not work on opposite sidewalks/curbs simultaneously.

CRITICAL ROADWAYS

NOTE: on some critical roadways with high pedestrian/vehicular volumes (e.g. Times Square, Downtown Brooklyn, Queensboro Plaza) OCMC-Streets reserves the right to determine the appropriate maintenance and protection of traffic in consultation with the engineer-in-charge for the agency performing the work. In these locations, the stipulations identified in CEC-13-533 may not be used.

- Working hours shall be as follows: 9:00 AM to 4:00 PM, Monday to Friday (9:00 AM to 2:00 PM, Monday to Friday if working within a school zone) and 8:00 AM to 4:00 PM Saturday.
- Should "No Standing" rush hour regulations apply adjacent to/or opposite the construction zone, work is restricted during the hours specified on the posted regulation. *OCMC-Streets should be contacted in writing by the engineer-in-charge only if they are requesting a waiver and consideration to work during the restricted hours.*
- The contractor shall maintain shall maintain either a minimum 5-foot clear sidewalk or a 5-foot protected pedestrian walkway in the roadway adjacent the work zone for pedestrians. The pedestrian walkway shall be ramped at entry for handicapped access. Occupancy of no stopping zones, no standing anytime zones and authorized parking is prohibited.
- During working hours, the contractor shall occupy 11-feet of the roadway adjacent to the curb, including the pedestrian walkway, while maintaining one 11-foot lane for traffic on one way streets and two 11-foot lanes for traffic (one 11-foot lane in each direction) on two-way streets.

OCMC FILE NO: BNEC-13-533
CONTRACT NO: ALL BIOSWALE CONTRACTS, CITYWIDE
PROJECT: VARIOUS, CITYWIDE

- After working hours, the contractor may occupy 8-feet adjacent to curb, including the pedestrian walkway, and all crosswalks must be opened to pedestrians. Occupancy of no stopping zones, no standing anytime zones and authorized parking is prohibited.
- The contractor shall not work on opposite sidewalks/curbs simultaneously.

C. GENERAL NOTES

1. **THIS IS NOT A PERMIT.** THIS STIPULATION SHEET MUST BE SUBMITTED WITH ALL REQUESTS FOR PERMITS PERTAINING TO THE ABOVE CONTRACT AND PRESENT AT THE WORK SITE ALONG WITH ALL ACTIVE CONSTRUCTION PERMITS WHEN THE APPROVED WORK IS BEING PERFORMED.
2. ALL RELOCATION WORK BY THE UTILITIES SUCH AS; CON EDISON, TELEPHONE, GAS AND CABLE COMPANIES SHALL PRECEDE THE CONTRACTORS' START OF WORK ON ALL AFFECTED ROADWAYS IN THE IMPACTED CONTRACT AREA.
3. THE CONTRACTOR IS ADVISED THAT OTHER CONTRACTORS MAY BE WORKING IN THE GENERAL AREA DURING THE TERM OF THIS STIPULATION. IN WHICH EVENT, THE CONTRACTOR MAY REQUIRE MODIFICATIONS BY THE OCMC-STREETS.
4. THE PERMITTEE IS NOT AUTHORIZED TO ENTER, OCCUPY OR USE ANY PUBLICLY-OWNED OR PRIVATELY OWNED, NON-PAVED, LANDSCAPE OR NON-LANDSCAPED LOCATION WITHOUT SPECIFIC WRITTEN PERMISSION. WHEN THE LOCATION IS WITHIN THE RIGHT-OF-WAY OF A LIMITED-ACCESS ARTERIAL HIGHWAY, **WRITTEN** APPROVAL FROM THE NYCDOT OCMC-HIGHWAYS IS REQUIRED. WHEN THE LOCATION IS WITHIN THE RIGHT-OF-WAY OF A PUBLIC STREET OR PUBLIC PARK, **WRITTEN** APPROVAL FROM THE NEW YORK CITY DEPARTMENT OF TRANSPORTATION OR NEW YORK CITY DEPARTMENT OF PARKS AND RECREATION IS REQUIRED. WHEN THE LOCATION IS WITHIN THE RIGHT-OF-WAY OF ANY OTHER JURISDICTION SUCH AS PRIVATE PROPERTY, STATE, FEDERAL ETC., IT IS THE PERMITTEE'S RESPONSIBILITY TO DETERMINE THE PROPERTY OWNER AND OBTAIN THE WRITTEN APPROVAL.
5. THE PERMITTEE SHALL ADHERE TO THE NYCDOT BUREAU OF BRIDGES' SPECIAL PROVISIONS FOR LANDSCAPE PROTECTION, MAINTENANCE AND RESTORATION, ITEMS 1.18.15 THROUGH 1.18.19, WHENEVER AND WHEREVER ANY OF THE PERMITTEE'S ACTIVITIES OCCUR WITHIN A LIMITED ACCESS ARTERIAL HIGHWAY RIGHT - OF - WAY.
6. NO DEVIATION OR DEPARTURE FROM THESE STIPULATIONS WILL BE PERMITTED WITHOUT THE PRIOR WRITTEN APPROVAL FROM THE OCMC-STREETS. REQUEST FOR SUCH MODIFICATIONS SHALL BE SUBMITTED TO THE OFFICE OF THE OCMC-STREETS, NEW YORK CITY DEPARTMENT OF TRANSPORTATION, A MINIMUM OF TWENTY (20) DAYS IN ADVANCE FOR CONSIDERATION.
7. FOR THIS PROJECT THE CONTRACTOR SHALL FURNISH, INSTALL AND MAINTAIN ALL NECESSARY ADVANCE WARNING AND DETOUR SIGNS, TEMPORARY CONTROL DEVICES, BARRICADES, LIGHTS AND FLASHING ARROW BOARDS IN ACCORDANCE WITH THE "MANUAL ON UNIFORM TRAFFIC CONTROL DEVICES," THE TYPICAL SCHEMES INCLUDED IN THIS SPECIFICATION; AND AS ORDERED BY THE ENGINEER-IN-CHARGE AND THE OCMC-STREETS.
8. THE CONTRACTOR SHALL BE RESPONSIBLE FOR IDENTIFYING HIS CONSTRUCTION SIGNAGE. THE IDENTIFICATION SHALL INCLUDE THE CONTRACTOR'S NAME, SPONSORING AGENCY NAME AND THE CONTRACT NUMBER. THE IDENTIFICATION SHALL BE PLACED ON THE BACK OF THE SIGN. THE LETTERING SHALL BE THREE (3) INCHES HIGH.
9. THE OCMC-STREETS RESERVES THE RIGHT TO VOID OR MODIFY THESE STIPULATIONS SHOULD CONSTRUCTION FAIL TO COMMENCE WITHIN TWO (2) YEARS OF THE SIGNED DATE OF THESE STIPULATIONS.
10. THE CONTRACTOR MUST COMPLY WITH ALL CONSTRUCTION EMBARGOS ISSUED BY THE NYCDOT INCLUDING THE HOLIDAY EMBARGO.

JOSEPH P. NOTO
EXECUTIVE DIRECTOR
OCMC-STREETS

JPN/mdo

NEW YORK CITY

Department of Transportation

POLLY TROTTENBERG, Commissioner

OCMC TRAFFIC STIPULATIONS - AMENDMENT # 1 **SEPTEMBER 12, 2014**

OCMC FILE NO: CEC-13-533
CONTRACT NO: ALL BIOSWALE CONTRACTS, CITYWIDE
PROJECT: BIOSWALE INSTALLATION, CITYWIDE

LOCATION(S): VARIOUS, CITYWIDE

STIPULATIONS ORIGINALLY DATED **November 21, 2013** GRANTING PERMISSION TO ENTER UPON AND RESTRICT THE FLOW OF TRAFFIC AT THE ABOVE LOCATION AND ITS LOCAL ADJACENT STREETS FOR THE PURPOSE OF CARRYING OUT THE ABOVE NOTED PROJECT, IS HEREBY AMENDED AS FOLLOWS:

A. SPECIAL STIPULATIONS

1. **EMBARGOES** – A CONSTRUCTION EMBARGO WILL APPLY TO THOSE LOCATIONS BELOW WHICH FALL WITHIN THE **HOLIDAY EMBARGO** OR ANY OTHER SPECIAL EVENT EMBARGOES AS PUBLISHED BY THE BUREAU OF PERMIT MANAGEMENT AND CONSTRUCTION CONTROL.
2. **BIKE LANES** – IF WORK IS IN OR AFFECTING A BIKE LANE, THE PERMITTEE MUST POST ADVANCE WARNING SIGNS 350 FEET AND 200 FEET PRIOR TO THE WORK ZONE STATING **"CONSTRUCTION IN BIKE LANE AHEAD PROCEED WITH CAUTION"**, AND ALSO POST A SIGN AT THE WORK ZONE STATING **"CONSTRUCTION IN BIKE LANE PROCEED WITH CAUTION"**. SUCH SIGNS SHALL BE ORANGE, 3' X 3', DIAMOND-SHAPED WITH 4" BLACK LETTERING. SIGNS SHALL BE POSTED IN ACCORDANCE WITH THE FEDERAL MANUAL ON UNIFORM TRAFFIC CONTROL DEVICES (MUTCD).
3. **BIKE SHARE STATIONS:** THE PERMITTEE SHALL NOT REMOVE, RELOCATE, DAMAGE OR DISRUPT THE OPERATION OF EXISTING BIKE SHARE STATIONS WITHOUT FIRST CONTACTING NYC BIKE SHARE AT 855-245-3311 FOR THEIR REQUIREMENTS PRIOR TO COMMENCING WORK.
4. **BUS STOPS** – THE PERMITTEE SHALL PROVIDE WRITTEN NOTICE TO NYC DOT OCMC AND NEW YORK CITY TRANSIT (NYCT) A MINIMUM OF FIVE (5) WEEKS IN ADVANCE FOR LANE/STREET CLOSURES THAT AFFECT BUS ROUTES/BUS STOPS.
5. **STREET LIGHTS / TRAFFIC SIGNALS:** THE PERMITTEE SHALL NOT REMOVE OR RELOCATE EXISTING STREET LIGHTS OR TRAFFIC SIGNALS WITHOUT FIRST OBTAINING APPROVAL FROM NYCDOT STREET LIGHTING / TRAFFIC SIGNALS UNIT.
6. **TRAFFIC CAMERAS, DETECTION/COMMUNICATION EQUIPMENT:** IF AT ANY TIME DURING THE APPROVED WORK, THE PERMITTEE ENCOUNTERS TRAFFIC SURVEILLANCE CAMERAS, DETECTION EQUIPMENT OR ANY TYPE OF COMMUNICATION EQUIPMENT (WIRELESS OR HARD-WIRED) ON ANY NYC DOT FACILITY, THAT IS NOT INCLUDED ON THE DESIGN/BUILD DRAWINGS, THE PERMITTEE SHALL IMMEDIATELY NOTIFY NYC DOT TRAFFIC MANAGEMENT BY PHONE AT 718-433-3390 OR 718-433-3340 AND VIA EMAIL AT TMC@DOT.NYC.GOV AND AWAIT DIRECTION PRIOR TO CONTINUING WORK.
7. **METERS** – THE PERMITTEE SHALL NOT REMOVE OR RELOCATE PARKING METERS WITHOUT FIRST OBTAINING APPROVAL FROM NYCDOT PARKING METER DIVISION AT 718 – 894 – 8651.
8. **ACCESS TO ABUTTING PROPERTIES** – THE PERMITTEE SHALL COORDINATE ALL ACTIVITIES WITH ABUTTING PROPERTY OWNERS TO ENSURE ACCESS IS PROVIDED TO/FROM ENTRANCES/DRIVEWAYS AT ALL TIMES.
9. **AUTHORIZED PARKING** – PRIOR TO PERFORMING WORK WHICH IMPACTS AUTHORIZED PARKING, THE PERMITTEE SHALL SUBMIT IN WRITING, AND COPY OCMC-STREETS, A REQUEST TO OCCUPY SPACE CURRENTLY USED BY AUTHORIZED VEHICLES. APPROVAL MUST BE RECEIVED FROM AUTHORIZED PARKING PRIOR TO OCCUPYING THESE AREAS.
10. **NOTIFICATION** – THE PERMITTEE MUST AT LEAST TWO (2) WORKING DAYS BEFORE THE START OF CONSTRUCTION NOTIFY THE NYC FIRE DEPARTMENT, NYC POLICE DEPARTMENT, NYCEMS, LOCAL COMMUNITY BOARD, BOROUGH PRESIDENT'S OFFICE-CHIEF ENGINEER, NYCDOT OCMC OFFICE, AND ALL ABUTTING PROPERTY OWNERS.
11. **STIPULATION CHANGES** – IF ANY OF THESE REQUIREMENTS, INCLUDING THE REQUIREMENTS LISTED BELOW, CANNOT BE MET, A REQUEST FOR MODIFICATIONS SHALL BE SUBMITTED IN WRITING TO OCMC-STREETS BY THE ENGINEER-IN-CHARGE FOR THE

NYC Department of Transportation
Bureau of Permit Management and Construction Control
55 Water Street - 7th Floor, New York, NY 10041
T: 212.839.9621 F: 212.839.8970
www.nyc.gov/dot

B. MAINTENANCE AND PROTECTION OF TRAFFIC

DEFINITION: For the purposes of this traffic stipulation sheet, the term "Critical Roadways" shall pertain to those roadways listed in the NYCDOT Highway Rules, where work restrictions apply during specific hours of the day.

NON-CRITICAL ROADWAYS

ROADWAYS UP TO 44 FEET IN WIDTH:

- Working hours shall be as follows: 7:00 AM to 6:00 PM, Monday to Friday (9:00 AM to 2:00 PM, Monday to Friday if working within a school zone) and 8@0 AM to 4:00 PM Saturday
- Should "No Standing" rush hour regulations apply adjacent to/or opposite the construction zone, work is restricted during the hours specified on the posted regulation. *OCMC should be contacted only if the Resident Engineer is requesting a waiver and consideration to work during the restricted hours.*
- A school variance (VAR001) is granted to work during school hours as stipulated by OCMC-Streets. The contractor must notify the school principal in writing 48 hours prior to beginning any work.
- During work hours, the contractor shall fully close the sidewalk and post signs meeting NYCDOT specifications for directing pedestrians to the opposite sidewalk.
- During working hours, the contractor shall maintain 1-11 foot lane for traffic on one-way streets, and 2-11 foot lanes for traffic, 1-11 foot lanes in each direction, on two-way streets.
- After working hours, the contractor shall maintain either a minimum 5-foot clear sidewalk or a 5-foot protected pedestrian walkway in the roadway adjacent to the work zone for pedestrians. Occupancy of no stopping zones, no standing anytime zones and authorized parking is prohibited. If a pedestrian walkway in the roadway is used, it shall be ramped at entry for handicapped access. All crosswalks must be opened to pedestrians.
- The contractor shall not work on opposite sidewalks/curbs simultaneously.

ROADWAYS 45 FEET OR GREATER IN WIDTH:

- Working hours shall be as follows: 7:00 AM to 6:00 PM, Monday to Friday (9:00 AM to 2:00 PM, Monday to Friday if working within a school zone) and 8@0 AM to 4:00 PM Saturday
- Should "No Standing" rush hour regulations apply adjacent to/or opposite the construction zone, work is restricted during the hours specified on the posted regulation. *OCMC should be contacted only if the Resident Engineer is requesting a waiver and consideration to work during the restricted hours.*
- A school variance (VAR001) is granted to work during school hours as stipulated by OCMC-Streets. The contractor must notify the school principal in writing 48 hours prior to beginning any work.
- The contractor shall maintain either a minimum 5-foot clear sidewalk or a 5-foot protected pedestrian walkway in the roadway adjacent to the work zone for pedestrians. The pedestrian walkway shall be ramped at entry for handicapped access. Occupancy of no stopping zones, no standing anytime zones and authorized parking is prohibited. All crosswalks must be opened to pedestrians.
- During working hours, the contractor shall occupy 11 feet of the roadway adjacent to the curb, including the pedestrian walkway, while maintaining one 11-foot lane for traffic on one-way streets and two 11-foot lanes for traffic (one 11-foot lane in each direction) on two-way streets.
- After working hours, the contractor may occupy 8 feet adjacent to the curb, including the pedestrian walkway, and all crosswalks must be opened to pedestrians. Occupancy of no stopping zones, no standing anytime zones and authorized parking is prohibited.
- The contractor shall not work on opposite sidewalks/curbs simultaneously.

B. MAINTENANCE AND PROTECTION OF TRAFFIC (CONTINUED)

CRITICAL ROADWAYS

NOTE: On some critical roadways with high pedestrian/vehicular volumes (e.g. Times Square, Downtown Brooklyn, Queensboro Plaza) OCMC-Streets reserves the right to determine the appropriate maintenance and protection of traffic in consultation with the engineer-in-charge for the agency performing the work. In these locations, the stipulations identified in CEC-13-533 may not be used.

- Working hours shall be as follows: 9:00 AM to 4:00 PM, Monday to Friday (9:00 AM to 2:00 PM, Monday to Friday if working within a school zone) and 8:00 AM to 4:00 PM Saturday
- Should "No Standing" rush hour regulations apply adjacent to/or opposite the construction zone, work is restricted during the hours specified on the posted regulation. *OCMC should be contacted only if the Resident Engineer is requesting a waiver and consideration to work during the restricted hours.*
- A school variance (VAR001) is granted to work during school hours as stipulated by OCMC-Streets. The contractor must notify the school principal in writing 48 hours prior to beginning any work.
- The contractor shall maintain either a minimum 5-foot clear sidewalk or a 5-foot protected pedestrian walkway in the roadway adjacent to the work zone for pedestrians. The pedestrian walkway shall be ramped at entry for handicapped access. Occupancy of no stopping zones, no standing anytime zones and authorized parking is prohibited.
- During working hours, the contractor shall occupy 11 feet of the roadway adjacent to the curb, including the pedestrian walkway, while maintaining one 11-foot lane for traffic on one-way streets and two 11-foot lanes for traffic (one 11-foot lane in each direction) on two-way streets.
- After working hours, the contractor may occupy 8 feet adjacent to the curb, including the pedestrian walkway, and all crosswalks must be opened to pedestrians. Occupancy of no stopping zones, no standing anytime zones and authorized parking is prohibited.
- The contractor shall not work on opposite sidewalks/curbs simultaneously.

C. GENERAL NOTES

1. **THIS IS NOT A PERMIT.** THIS STIPULATION SHEET MUST BE SUBMITTED WITH ALL REQUESTS FOR PERMITS PERTAINING TO THE ABOVE CONTRACT AND PRESENT AT THE WORK SITE ALONG WITH ALL ACTIVE CONSTRUCTION PERMITS WHEN THE APPROVED WORK IS BEING PERFORMED.
2. **ALL OTHER STIPULATIONS UNDER ORIGINAL NYCDOT STIPULATIONS SHEET CEC-13-533 DATED 11/21/13 WHICH HAVE NOT BEEN CHANGED BY THIS AMENDMENT REMAIN IN EFFECT.**
3. ALL RELOCATION WORK BY THE UTILITIES SUCH AS; CON EDISON, TELEPHONE, GAS AND CABLE COMPANIES SHALL PRECEDE THE CONTRACTORS' START OF WORK ON ALL AFFECTED ROADWAYS IN THE IMPACTED CONTRACT AREA.
4. THE CONTRACTOR IS ADVISED THAT OTHER CONTRACTORS MAY BE WORKING IN THE GENERAL AREA DURING THE TERM OF THIS STIPULATION. IN WHICH EVENT, THE CONTRACTOR MAY REQUIRE MODIFICATIONS BY THE OCMC-STREETS.
5. THE PERMITTEE IS NOT AUTHORIZED TO ENTER, OCCUPY OR USE ANY PUBLICLY-OWNED OR PRIVATELY OWNED, NON-PAVED, LANDSCAPE OR NON-LANDSCAPED LOCATION WITHOUT SPECIFIC WRITTEN PERMISSION. WHEN THE LOCATION IS WITHIN THE RIGHT-OF-WAY OF A LIMITED-ACCESS ARTERIAL HIGHWAY, WRITTEN APPROVAL FROM THE NYCDOT OCMC-HIGHWAYS IS REQUIRED. WHEN THE LOCATION IS WITHIN THE RIGHT-OF-WAY OF A PUBLIC STREET OR PUBLIC PARK, WRITTEN APPROVAL FROM THE NEW YORK CITY DEPARTMENT OF TRANSPORTATION OR NEW YORK CITY DEPARTMENT OF PARKS AND RECREATION IS REQUIRED. WHEN THE LOCATION IS WITHIN THE RIGHT-OF-WAY OF ANY OTHER JURISDICTION SUCH AS PRIVATE PROPERTY, STATE, FEDERAL ETC., IT IS THE PERMITTEE'S RESPONSIBILITY TO DETERMINE THE PROPERTY OWNER AND OBTAIN THE WRITTEN APPROVAL.
6. THE PERMITTEE SHALL ADHERE TO THE NYCDOT BUREAU OF BRIDGES' SPECIAL PROVISIONS FOR LANDSCAPE PROTECTION, MAINTENANCE AND RESTORATION, ITEMS 1.18.15 THROUGH 1.18.19, WHENEVER AND WHEREVER ANY OF THE PERMITTEE'S ACTIVITIES OCCUR WITHIN A LIMITED ACCESS ARTERIAL HIGHWAY RIGHT - OF - WAY.
7. NO DEVIATION OR DEPARTURE FROM THESE STIPULATIONS WILL BE PERMITTED WITHOUT THE PRIOR WRITTEN APPROVAL FROM THE OCMC-STREETS. REQUEST FOR SUCH MODIFICATIONS SHALL BE SUBMITTED TO THE OFFICE OF THE OCMC-STREETS, NEW YORK CITY DEPARTMENT OF TRANSPORTATION, A MINIMUM OF TWENTY (20) DAYS IN ADVANCE FOR CONSIDERATION.

AMENDMENT #1

C. **GENERAL NOTES** (CONTINUED)

8. FOR THIS PROJECT THE CONTRACTOR SHALL FURNISH, INSTALL AND MAINTAIN ALL NECESSARY ADVANCE WARNING AND DETOUR SIGNS, TEMPORARY CONTROL DEVICES, BARRICADES, LIGHTS AND FLASHING ARROW BOARDS IN ACCORDANCE WITH THE "MANUAL ON UNIFORM TRAFFIC CONTROL DEVICES," THE TYPICAL SCHEMES INCLUDED IN THIS SPECIFICATION; AND AS ORDERED BY THE ENGINEER-IN-CHARGE AND THE OCMC-STREETS.
9. THE CONTRACTOR SHALL BE RESPONSIBLE FOR IDENTIFYING HIS CONSTRUCTION SIGNAGE. THE IDENTIFICATION SHALL INCLUDE THE CONTRACTOR'S NAME, SPONSORING AGENCY NAME AND THE CONTRACT NUMBER. THE IDENTIFICATION SHALL BE PLACED ON THE BACK OF THE SIGN. THE LETTERING SHALL BE THREE (3) INCHES HIGH.
10. THE OCMC-STREETS RESERVES THE RIGHT TO VOID OR MODIFY THESE STIPULATIONS SHOULD CONSTRUCTION FAIL TO COMMENCE WITHIN TWO (2) YEARS OF THE SIGNED DATE OF THESE STIPULATIONS.
11. THE CONTRACTOR MUST COMPLY WITH ALL CONSTRUCTION EMBARGOS ISSUED BY THE NYCDOT INCLUDING THE HOLIDAY EMBARGO.

JOSEPH F. NOTO
EXECUTIVE DIRECTOR
OCMC-STREETS

DUANE C. BARRA
PROJECT MANAGER
OCMC-STREETS

(NO TEXT ON THIS PAGE)

Citywide Siting Criteria for Green Infrastructure - Required Clearance to Street Features					
Features	**ROWB/ROWGS**	**SGS**	**Infiltration Basin (Concrete)**	**Infiltration Basin (Grass)**	**Tree Spacing for GI**
Bus stops	• **100'** back from posted bus stop sign • **20'** ahead of posted sign • Do not install GI aprons in concrete bus pads	• **100'** back from posted bus stop sign • **20'** ahead of posted sign • Do not install GI aprons in concrete bus pads	Do not install GI aprons in concrete bus pads	Do not install GI aprons in concrete bus pads	Do not plant within bus stops
MTA facilities	**25'**	**25'**	**25'**	**25'**	Avoid blocking
Schools	• **25'** from center of main entrance (**50** feet total clear space required in front of entrance) • Do not site in school bus loading areas	**25'** from center of main entrance (**50** feet total clear space required in front of entrance)	N/A	N/A	Do not plant in front of entrances
No Standing Zones	N/A	N/A	N/A	N/A	Do not plant within no standing zones
Building lines	**7'**	**7'**	**7'**	**7'**	Minimum distance from tree trunk to building line is **7'**
Projections into pedestrian clear path	Diagonal clearance at 45° of **7'**	Diagonal clearance at 45° of **7'**	N/A	N/A	N/A
Building vaults	**7'**	**7'**	**7'**	**7'**	No Tree between Vault and curb
Crosswalks (marked and unmarked)	**5'**	**5'**	**5'**	**5'**	N/A
Driveways/legal curb cuts	**5'**	**5'**	**5'**	**5'**	Minimum distance to tree trunk is **7'**
Doorways	• Do not site in front of door • Precast concrete walkway can be in front of door	Provide pedestrian path in front of door	N/A	N/A	Do not plant in front of entrances
Gates	• Do not site in front of gate • Provide **5'** clearance from gate swing • For small residential gates in low-density neighborhoods, provide **3'** clearance from gate swing	N/A	N/A	N/A	N/A
Street lights	**5'**	Check with street light unit if light in sidewalk behind SGS	**3'**	**3'**	**25'** from tree trunk
Utility poles and guy wires	**5'**	Check with utility if utility pole/guy wire in sidewalk behind SGS	**3'**	**3'**	**25'** from tree trunk
Tree pits	**5'**	• Tree pit can be on sidewalk behind SGS • If tree pit is not directly behind SGS, then provide **5'** between tree pit and edge of SGS	N/A	N/A	Minimum distance between trees (trunk to trunk) shall be **20' - 30'** depending upon the tree species and other local conditions
CityBench	**5'** (may be relocated with DOT unit approval)	N/A	Do not site under street furnishings	Do not site under street furnishings	N/A

Muni-Meter	• Only bioswales set back several feet from the curb in Muni-Meter parking areas are permitted • 5' clearance required between meters and set-back bioswales • Meters may be relocated with DOT unit approval	N/A	• 4' clearance require between meters and Infiltration Basins • Meters may be relocated with DOT unit approval	• 4' clearance require between meters and Infiltration Basins • Meters may be relocated with DOT unit approval	Suggested distance from a parking meter back to tree trunk shall be no more than **5 ft.** to allow for the swing of car doors
Fire hydrant	3'6" from edge of hydrant or bollards	**15'**	**3'-6"**	**3'-6"**	No minimum as long as GI spacing is followed
Catch Basins	**4' 6"**	**4' 6"**	**4' 6"**	**4' 6"**	**4' 6"**
Valves (Gas, Water, Oil Fill)	**1' 6"**	**1' 6"**	**1' 6"**	**1' 6"**	**7'** from tree trunk
Coal Chute	N/A	N/A	N/A	N/A	**7'** from tree trunk
FDNY SGS Rules	N/A	In no instance may a ROWSGS reduce an unobstructed roadway width to no less than **18'**	N/A	N/A	N/A
Phone Booths	**5'**	**5'**	**3'**	**3'**	No minimum as long as GI spacing is followed
Manholes	**5'**	**5'**	**5'**	**5'**	N/A
Monitoring Wells	**50'**	**50'**	**50'**	**50'**	N/A
GI Spacing	• **5 ft.** between hydraulically connected sites • **10 ft.** between non-hydraulically connected sites	N/A	**10 ft.** between all Infiltration Basins	**10 ft.** between all Infiltration Basins	N/A
Existing Grass Strip	Match existing width of grass strip while ensuring **5 ft.** of clear walking space is maintained	N/A	N/A	Match existing width of grass strip	To site a tree, GI must be at least **4'** wide
Bike Racks	**5'**	N/A	**2'**	**2'**	No minimum as long as GI spacing is followed
DEP Water/Sewer Main	**3'-6"**	**3'-6"**	**3'-6"**	**3'-6"**	Minimum horizontal distance from DEP water main to tree trunk is **6 ft.**
Existing Tree to Proposed Tree	N/A	N/A	N/A	N/A	Minimum distance between trees (trunk to trunk) shall be **20' - 30'** depending upon the tree species and other local conditions
Edge of GI to center of adjacent Existing Tree	minimum **10'** and avoid driplines	N/A	minimum **10'** and avoid driplines	minimum **10'** and avoid driplines	N/A
Signs*	**5'**	**5'**	**2'**	**2'**	Stop sign to tree trunk is **30 ft.** Other street signs to tree trunk is **6 ft.**
Corner of Street Intersection	N/A	N/A	N/A	N/A	Minimum distance to tree trunk is **40 ft.**

*ROWBs, ROWGSs, and ROWSGSs sited within 5' of a Double-Arrow Parking Sign must be submitted to DOT in the Priority Spreadsheet for review.
ROWIBs sited within 2' of a Double-Arrow Parking Sign must be submitted to DOT in the Priority Spreadsheet for review.

NEW YORK CITY
DEPARTMENT OF TRANSPORTATION

GREEN INFRASTRUCTURE DESIGN GUIDELINES

NEW YORK CITY DOT

August 14, 2015

TABLE OF CONTENTS

GENERAL NOTES . . . . . PG 1

REFERENCE

REFERENCE DIAGRAMS . . . . . PG 4

ROWB TYPICAL NOTES . . . . . PG 6

SGS TYPICAL NOTES . . . . . PG 7

SGS DESIGN

SGS CONCRETE NECKDOWN (APPROACHING & PASSING) . . . . . PG 8

SGS PARTIAL CONCRETE NECKDOWN (APPROACHING) . . . . . PG 9

SGS NECKDOWN NEAR INTERSECTION (APPROACHING) . . . . . PG 10

SGS NECKDOWN NEAR INTERSECTION (PASSING) . . . . . PG 11

SGS MID-BLOCK NECKDOWN . . . . . PG 12

T-INTERSECTION SGS NECKDOWN . . . . . PG 13

DETAILS

REFERENCE DOCUMENTS . . . . . PG 14

NO STANDING ANYTIME SIGN . . . . . PG 15

FDNY FIRE TRUCK SPECIFICATIONS . . . . . PG 16

GENERAL NOTES

Document Purpose
While this document provides guidance on the design of green infrastructure (GI), including right-of-way bioswales (ROWBs) and stormwater greenstreets (SGSs), all final design determinations are at the discretion of New York City Department of Transportation (NYC DOT).

Auto-turn Requirements
Auto-turn is required to be shown on drawings and submitted in AutoCAD format for all proposed SGS sites at intersections, and mid-block SGS that have driveways located nearby. See G-3 for additional auto-turn requirements and standards.

Curbs
When constructing new curbs for ROWBs, consultant shall design to replace existing conditions. When designing new curbs for SGS installations, steel-faced curbs shall be used.

FDNY
For all streets that are currently 34' or wider and where proposed SGS will decrease the width of the roadway to less than 34', DEP shall coordinate review of the design proposal with FDNY.

Green Infrastructure Siting Guidelines
This document is intended to provide information in conjunction with the siting guidelines. All GI should adhere to the Combined GI Siting Guidelines table when determining potential locations for ROWBs and SGS.

Object Markers & "No Standing Anytime" Signs
Per MUTCD, object markers and "No Standing Anytime" signs should be installed at an angle of 45 degrees to the curb toward to driver's sight line.

Pedestrian Facilities
In any location where SGS may be proposed (including medians or unusual geometric conditions), provide continuous paths for pedestrians. Pedestrian desire lines must be maintained when modifying curb lines.

Pedestrian ramps should be provided for access to all marked and unmarked crosswalks, including at SGS corner neckdowns, concrete triangles and medians. All pedestrian ramps shall show the required tactile warning strips.

All pedestrian ramps in proposed SGS locations shall be designed by the consultant engineer to meet ADA compliance. See DWG D-1 for information on design details.

Note that pedestrian ramps shown in this document are only diagrammatic graphical representations.

Plant Heights
All SGSs will be evaluated on a case by case basis in regard to plant height in the installation. Please see drawings R-3 and R-4 for detail on plant height limits. Note that in all locations the consultant shall consider the possibility for pedestrians/children to dart out from the sidewalk into the roadway (i.e. schools, playgrounds, parks, candy stores, etc.) and utilize the 2'-0" planting height where necessary.

Stormwater Greenstreet Neckdown Design Priority
The preferred SGS neckdown design is SGS-1A, a full concrete neckdown. When the location of the catch basin is at the apex and does not permit SGS-1A, the consultant shall use the design of SGS-2A, a partial concrete neckdown. If the location of the catch basin does not permit a full or partial concrete neckdown, the consultant shall design according to SGS-3A or SGS-3B, depending on the direction of traffic next to the SGS. When circumstances necessitate that the SGS is located mid-block, or the SGS is located so that there is at least 18' between the SGS and the intersection, the consulstant shall design according to SGS-4A.

Traffic Signs & Signals / Parking Regulations / Existing Street Furnishings
DOT Borough Engineering is to review all traffic issues in the right-of-way. Trees shall not block traffic-related signs and any relocation or adjustment to existing/new signs may only be made with the concurrence of the DOT Borough Engineer.

DOT Borough Engineer will review the contract furniture location spreadsheet, submitted as needed during 60% and 100% reviews, and determine which signs require DOT input for relocation. Signs that do not require review by borough engineers shall follow the relocation process found in the NYC DOT Green Infrastructure Street Furniture Relocation Review/Construction Procedure.

DWG #	DWG TITLE	SCALE	DATE	PAGE
G-1	GENERAL NOTES	N.T.S.	6/19/15	1 OF 16

GREEN INFRASTRUCTURE DESIGN GUIDELINES

GENERAL NOTES

DRAWING KEY

W.I.	WATER INLET
W.O.	WATER OUTLET
	SIGN
	OBJECT MARKER
	NEW
	EXISTING
	DIRECTION OF WATER FLOW
	BUILDING ENTRANCE

APPROACHING/PASSING INTERSECTION

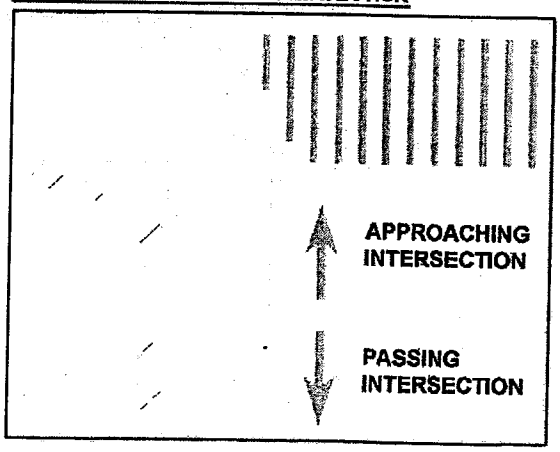

DWG #	DWG TITLE	SCALE	DATE	PAGE
G-2	GENERAL NOTES	N.T.S.	7/7/15	2 OF 16

NEW YORK CITY DOT

GREEN INFRASTRUCTURE DESIGN GUIDELINES

AUTOTURN NOTES

Template:
Consultants shall utilize the ACAD template (including layers) provided by NYC DOT for autoturn analysis at each SGS site.

Reference
Consultants may reference AASHTO Green Book, Chapter 2-Design Controls and Criteria.

Existing Conditions
All plans shall show all existing roadway markings accurately from curb to curb, including crosswalks, stop bars, center lines, travel lane lines, parking lane lines, bike lanes and markings, word messages (i.e. "STOP"), turning arrows, etc. Plans should also show traffic direction with hollow arrows.

Design Vehicles
The design vehicle shall be governed by the use of the roadway. The consultant shall provide specific AutoCAD layers for each type of vehicle used in analysis, utilizing a turning speed no less than 5 MPH.

For turns on standard streets: SU-30
For turns that are part of a MTA bus route: City-BUS Template (BUS-40)
For turns on local truck routes: WB-40
For turns between two mapped through truck routes: WB-50, or WB-62 when appropriate.

In some cases (in industrial areas, around highway exists / entrances, etc.) the use of WB-62 may be necessary.

For simulating a fire truck, the consultant shall refer to DWG # D-3 for vehicle dimensions and turning radius information. A fire truck may be shown encroaching on the adjacent lane for turns. At the discretion of NYC DOT Highway Design, a fire truck may have more leeway on two-way and multi-lane streets with regard to encroachments.

Parking
Parking regulations shall be shown on drawings. For one-way streets regulations should be provided for both sides of the street.

Consultant shall show 8' parking guideline (both sides of the street for one-way) or existing parking lane lines. For 60 and 90 degree angled parking areas, consultant shall show all existing and required markings.

Assessment of Street Parking Impacts
Auto-turn analysis, which shows impact to street parking*, shall be included with all design submissions. A written description that includes the number of lost spaces shall also be included. The auto-turn drawings shall include the proposed curb line geometry and the dimension of the newly proposed "No standing anytime" (N.S.A) zone (which replaces former parking zone).

*Please note that when parking must be removed the Consultant shall provide the Community Board response for each SGS with the 60% submission.

CONSULTANTS SHALL REFER TO NYC DOT AUTOTURN TEMPLATE FILE - SEE EXAMPLE BELOW

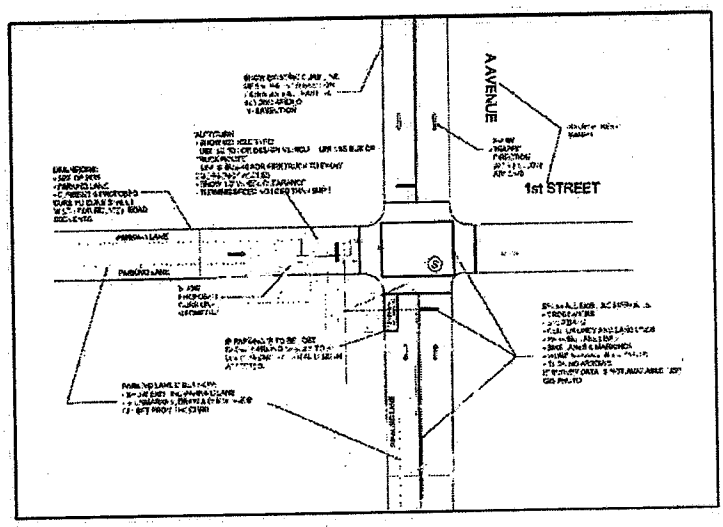

DWG #	DWG TITLE	SCALE	DATE	PAGE
G-3	AUTO-TURN NOTES	N.T.S.	7/7/15	3 OF 16

NEW YORK CITY DOT

GREEN INFRASTRUCTURE DESIGN GUIDELINES

FENCES & OTHER PROJECTIONS INTO SIDEWALK

NOTES
When fences, cellar doors, or other obstructions project into the sidewalk, the consultant shall ensure that:

1) The clear path minimum, based on land use/context, is met and

2) The diagonal clearance is 7'

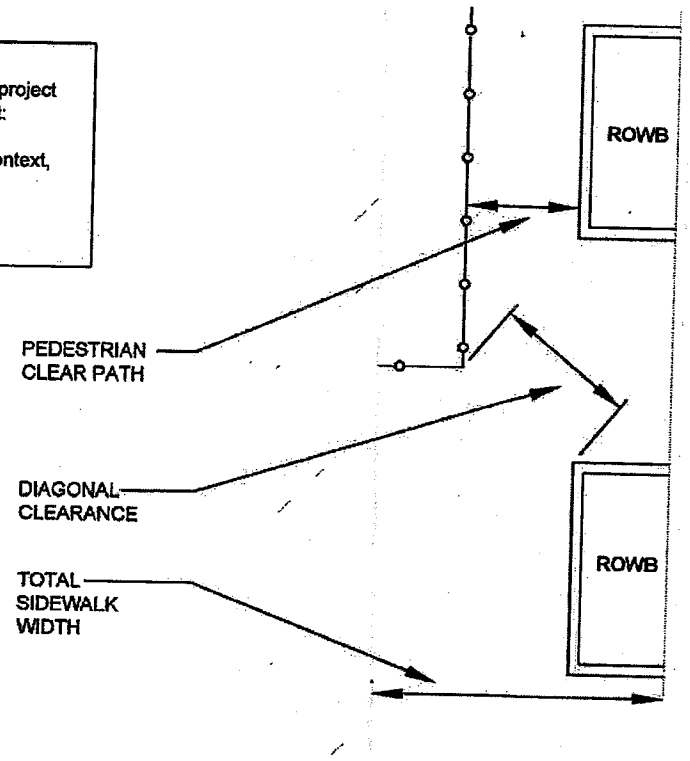

DOOR/GATE SWING

NOTES
DOOR SWING: Maintain 5' clear radius from the outside edge of any open door that swings open into sidewalk, in addition to all other clear path requirements.

DOOR WIDTH:

When door/gate is greater than 5' wide: Entire width of door/gate must remain clear to street

When door/gate is less than 5' wide: Minimum 5' path must be provided. 5' path should include width of door/gate, and path may line up with either side of door, as shown in diagram.

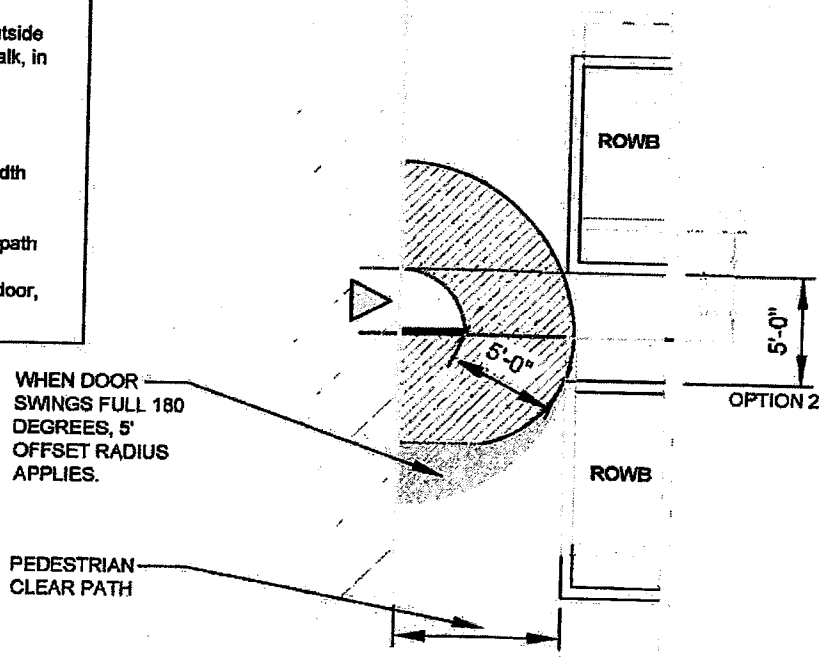

DWG #	DWG TITLE	SCALE	DATE	PAGE
R-1	REFERENCE DIAGRAMS	N.T.S.	6/19/15	4 OF 16

NEW YORK CITY DOT

GREEN INFRASTRUCTURE DESIGN GUIDELINES

CROSSWALKS (MARKED & UNNMARKED)

NOTES
ROWBs and SGSs shall always be a minimum 5' from an unmarked or marked crosswalk (whether or not pedestrian ramps are present). When striping that indicates the crosswalk is not present, the unmarked crosswalk is defined by the extension of the building line and the edge of the curbline.

This is important to note at the top of t-intersections, as shown in the diagram below.

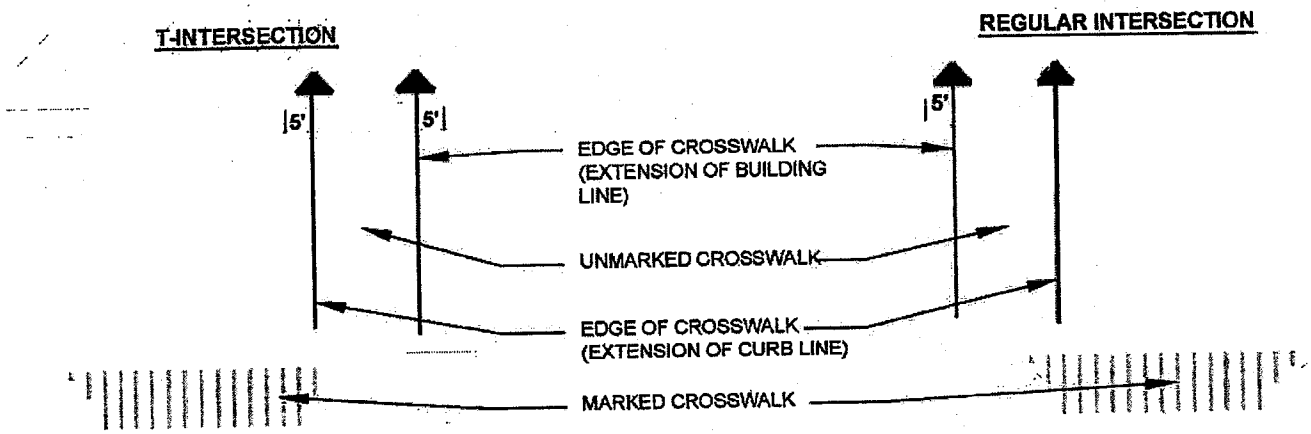

BUS STOPS

NOTES
ROWBs and SGSs may not be sited within 100' from the posted bus stop sign towards the back of the bus.

ROWBs and SGSs can, however, be preliminarily sited as close as 20' ahead of the posted bus stop sign at the discretion of DOT Bus Stop Management.

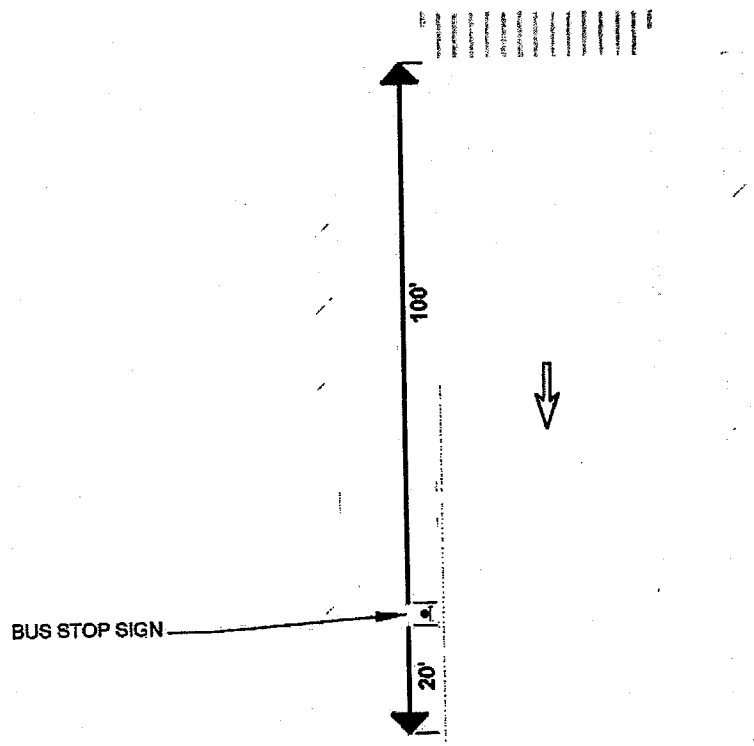

DWG #	DWG TITLE	SCALE	DATE	PAGE
R-2	REFERENCE DIAGRAMS (2)	N.T.S.	6/19/15	5 OF 16

NEW YORK CITY DOT

GREEN INFRASTRUCTURE DESIGN GUIDELINES

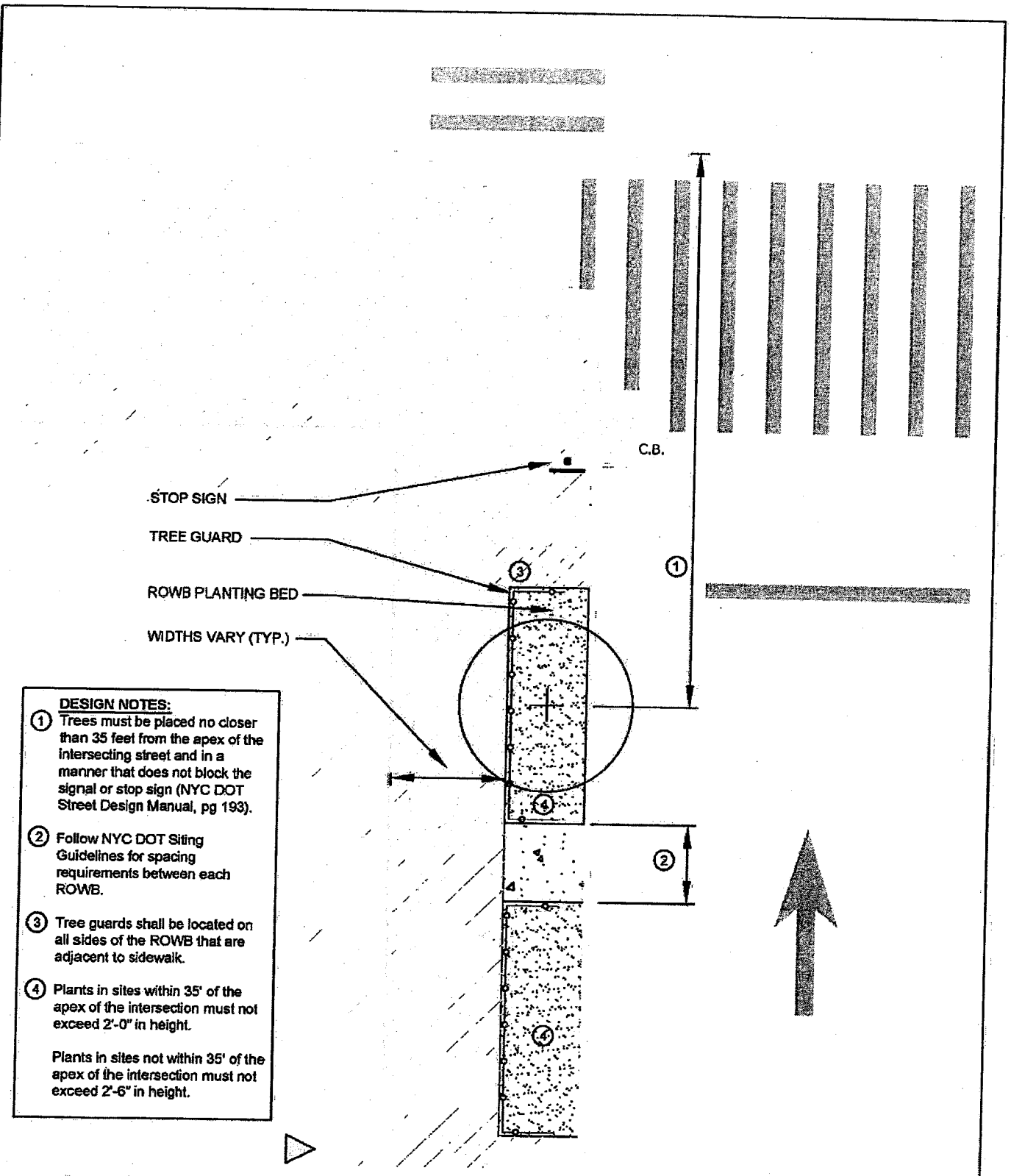

DESIGN NOTES:

1. Trees must be placed no closer than 35 feet from the apex of the intersecting street and in a manner that does not block the signal or stop sign (NYC DOT Street Design Manual, pg 193).
2. Follow NYC DOT Siting Guidelines for spacing requirements between each ROWB.
3. Tree guards shall be located on all sides of the ROWB that are adjacent to sidewalk.
4. Plants in sites within 35' of the apex of the intersection must not exceed 2'-0" in height.

   Plants in sites not within 35' of the apex of the intersection must not exceed 2'-6" in height.

DWG #	DWG TITLE	SCALE	DATE	PAGE
R-3	ROWB DESIGN GUIDELINES	1 1/2 " - 1'-0"	6/19/15	6 OF 16

NEW YORK CITY DOT

GREEN INFRASTRUCTURE DESIGN GUIDELINES

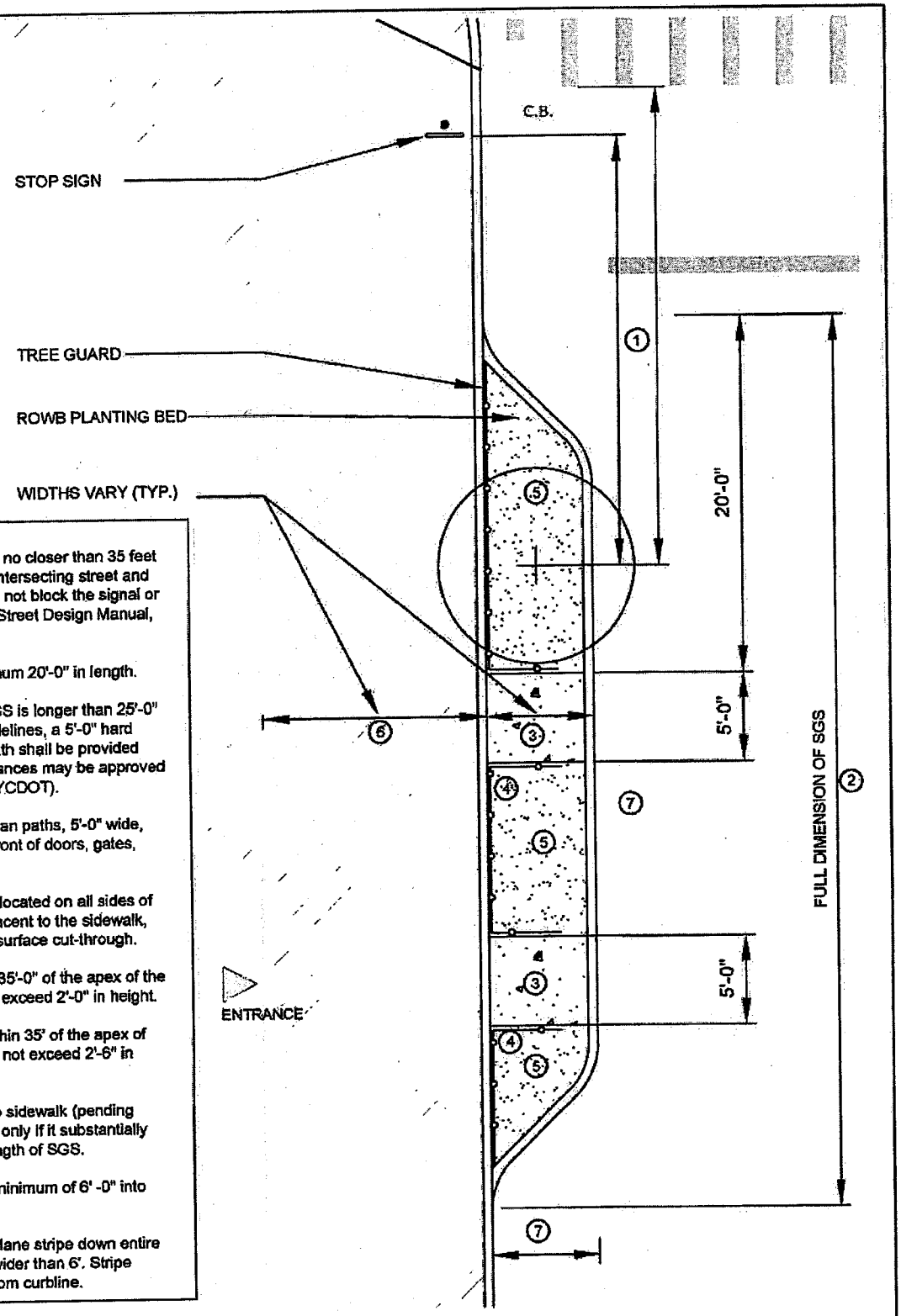

DESIGN NOTES:

1. Trees must be placed no closer than 35 feet from the apex of the intersecting street and in a manner that does not block the signal or stop sign (NYC DOT Street Design Manual, pg 193).
2. SGS must be a minimum 20'-0" in length.

   If full dimension of SGS is longer than 25'-0" or 30', per Siting Guidelines, a 5'-0" hard surface pedestrian path shall be provided every 20' (longer distances may be approved at the discretion of NYCDOT).
3. Hard surface pedestrian paths, 5'-0" wide, shall be provided in front of doors, gates, and steps.
4. Tree guards shall be located on all sides of the SGS that are adjacent to the sidewalk, including the 5' hard surface cut-through.
5. Plants in sites within 35'-0" of the apex of the intersection must not exceed 2'-0" in height.

   Plants in sites not within 35' of the apex of the intersection must not exceed 2'-6" in height.
6. SGS may extend into sidewalk (pending NYC DOT guidance) only if it substantially decreases overall length of SGS.
7. SGS shall project a minimum of 6' -0" into the roadway.

   Provide a 4" parking lane stripe down entire block when SGS is wider than 6'. Stripe should be 1' offset from curbline.

DWG #	DWG TITLE	SCALE	DATE	PAGE
R-4	SGS DESIGN GUIDELINES	1 1/2 " - 1'-0"	6/19/15	7 OF 16

NEW YORK CITY DOT

GREEN INFRASTRUCTURE DESIGN GUIDELINES

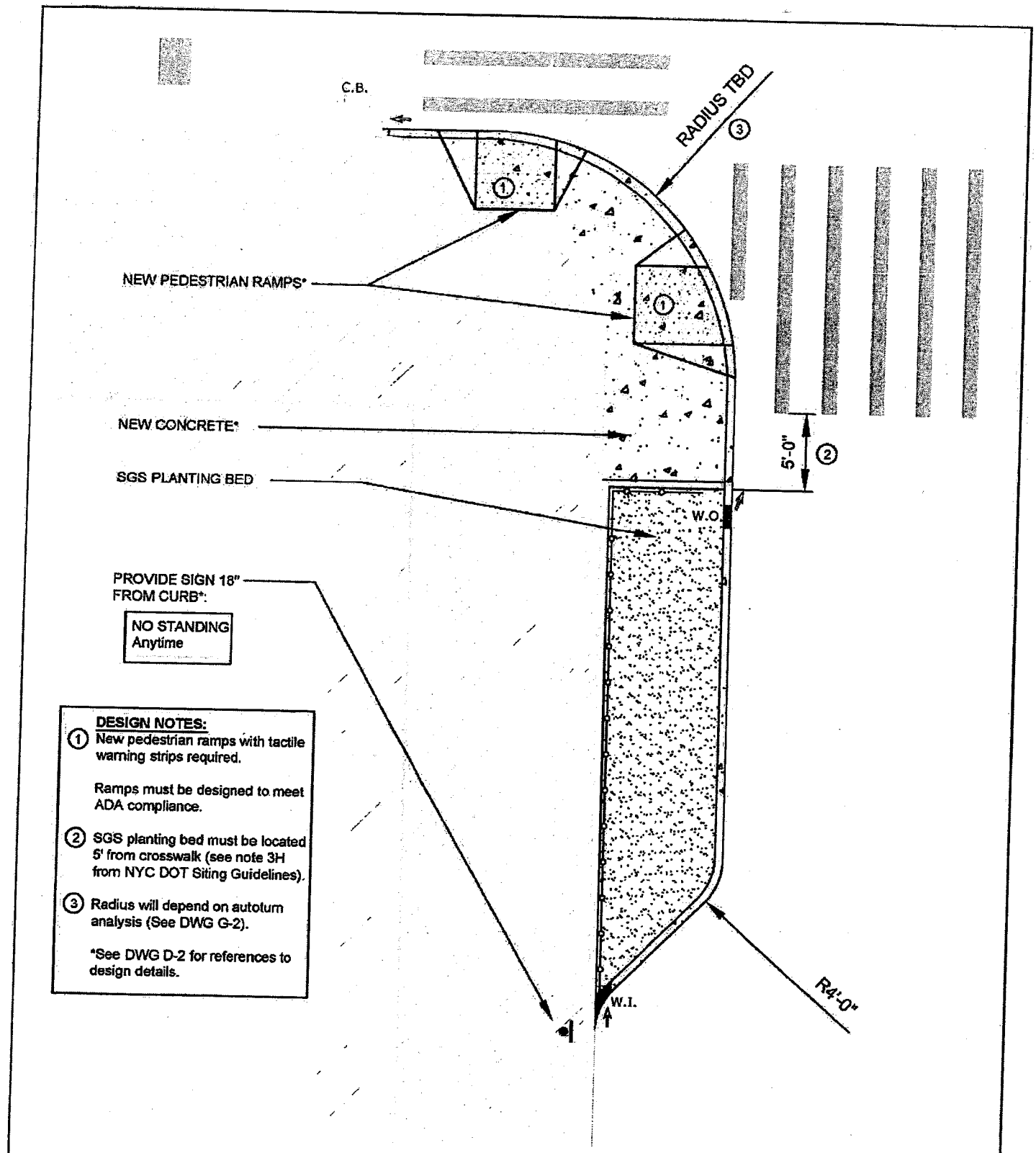

DESIGN NOTES:

1. New pedestrian ramps with tactile warning strips required.

   Ramps must be designed to meet ADA compliance.

2. SGS planting bed must be located 5' from crosswalk (see note 3H from NYC DOT Siting Guidelines).

3. Radius will depend on autoturn analysis (See DWG G-2).

*See DWG D-2 for references to design details.

DWG #	DWG TITLE	SCALE	DATE	PAGE
SGS-1A	SGS CONCRETE NECKDOWN	1 1/2 " - 1'-0"	6/19/15	8 OF 16

NEW YORK CITY DOT

GREEN INFRASTRUCTURE DESIGN GUIDELINES

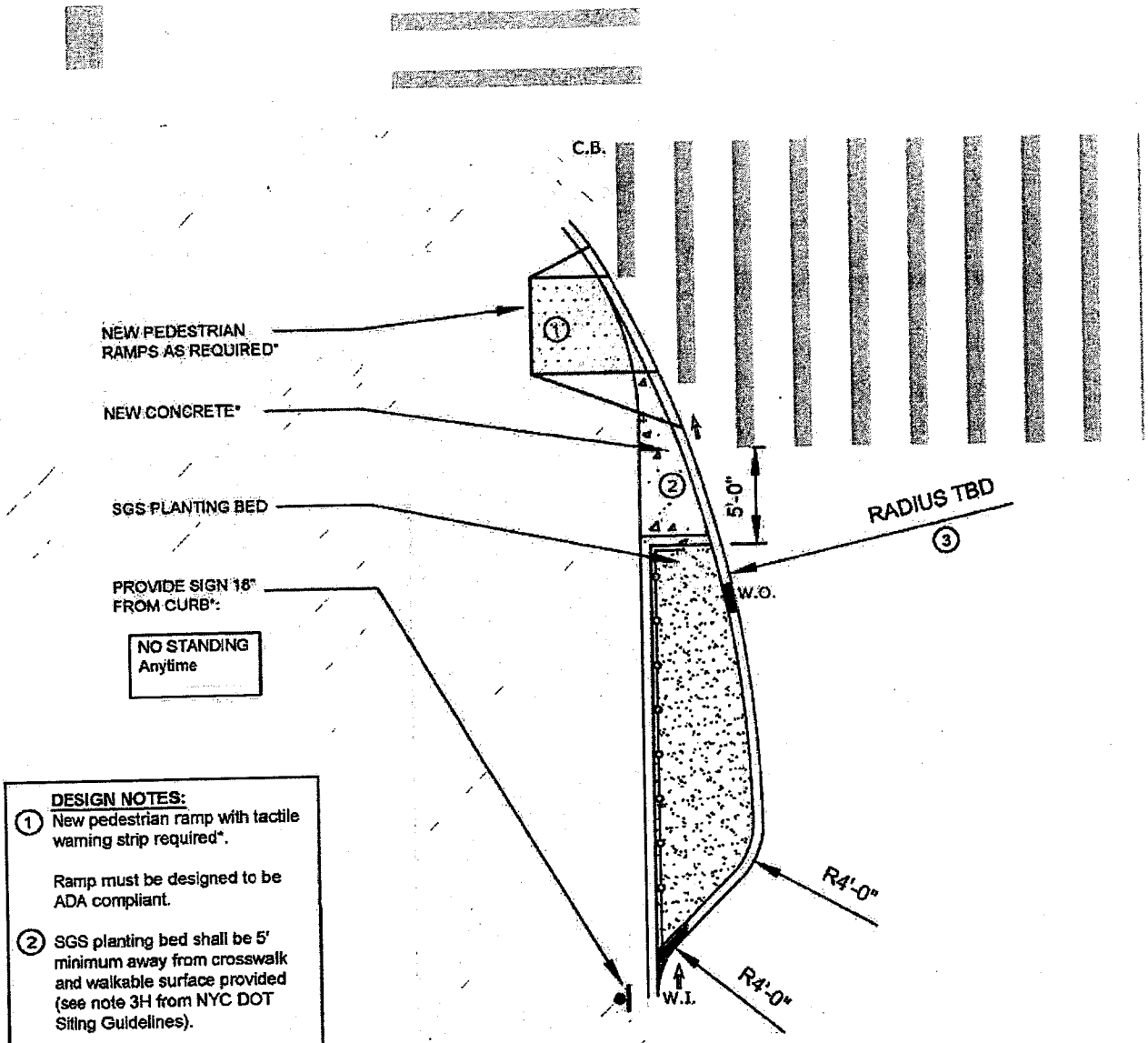

DESIGN NOTES:

1. New pedestrian ramp with tactile warning strip required*.

   Ramp must be designed to be ADA compliant.

2. SGS planting bed shall be 5' minimum away from crosswalk and walkable surface provided (see note 3H from NYC DOT Siting Guidelines).

3. Radius shall be singular continuation from corner to outside of neckdown.

   *See DWG D-2 for references to design details.

DWG #	DWG TITLE	SCALE	DATE	PAGE
SGS-2A	SGS PARTIAL CONCRETE NECKDOWN	1 1/2 " - 1'-0"	6/19/15	9 OF 16

NEW YORK CITY DOT

GREEN INFRASTRUCTURE DESIGN GUIDELINES

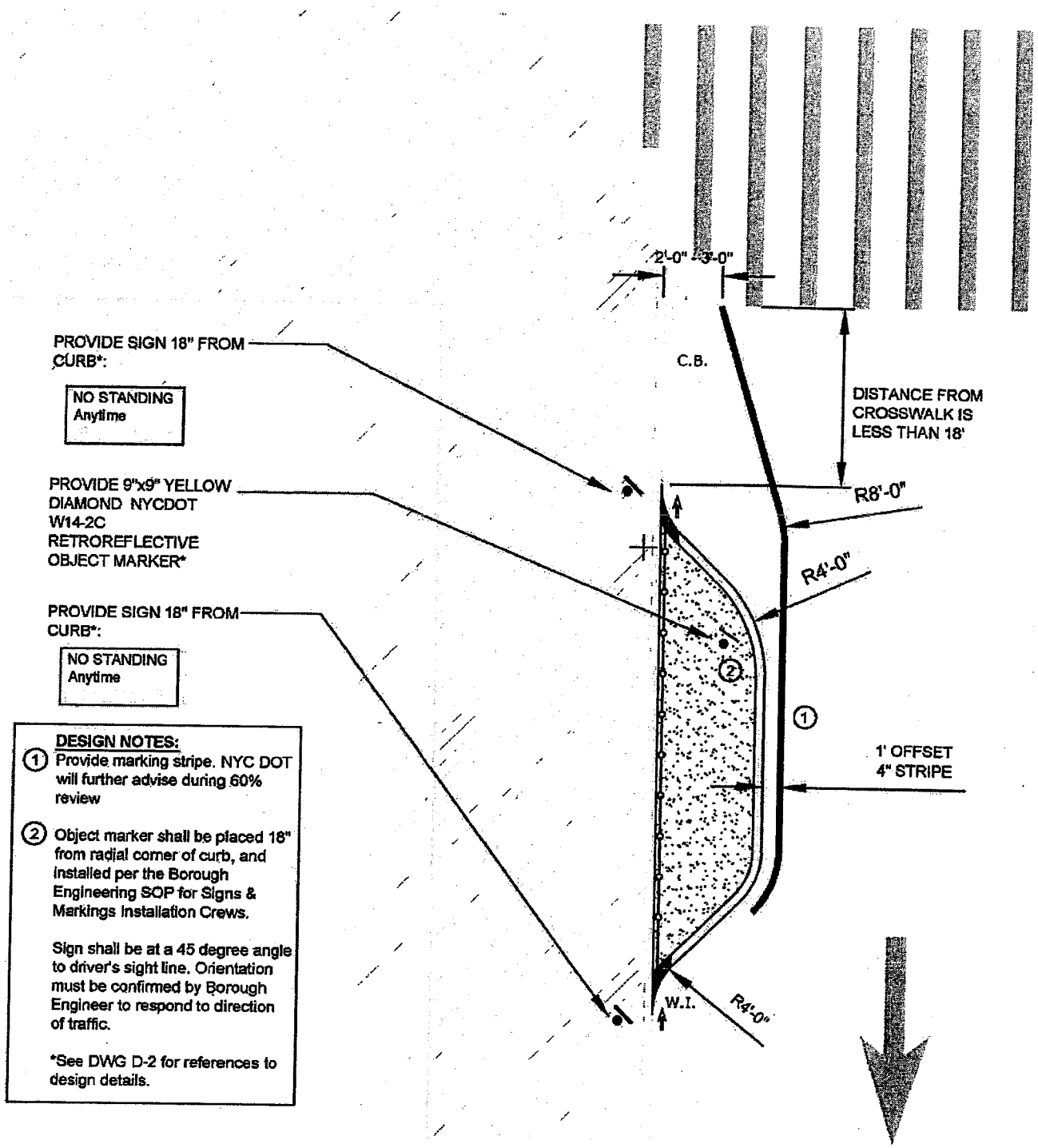

DESIGN NOTES:

1. Provide marking stripe. NYC DOT will further advise during 60% review
2. Object marker shall be placed 18" from radial corner of curb, and installed per the Borough Engineering SOP for Signs & Markings Installation Crews.

   Sign shall be at a 45 degree angle to driver's sight line. Orientation must be confirmed by Borough Engineer to respond to direction of traffic.

*See DWG D-2 for references to design details.

DWG #	DWG TITLE	SCALE	DATE	PAGE
SGS-3A	SGS NECKDOWN NEAR INTERSECTION	1 1/2 " - 1'-0"	6/19/15	10 OF 16

NEW YORK CITY DOT

GREEN INFRASTRUCTURE DESIGN GUIDELINES

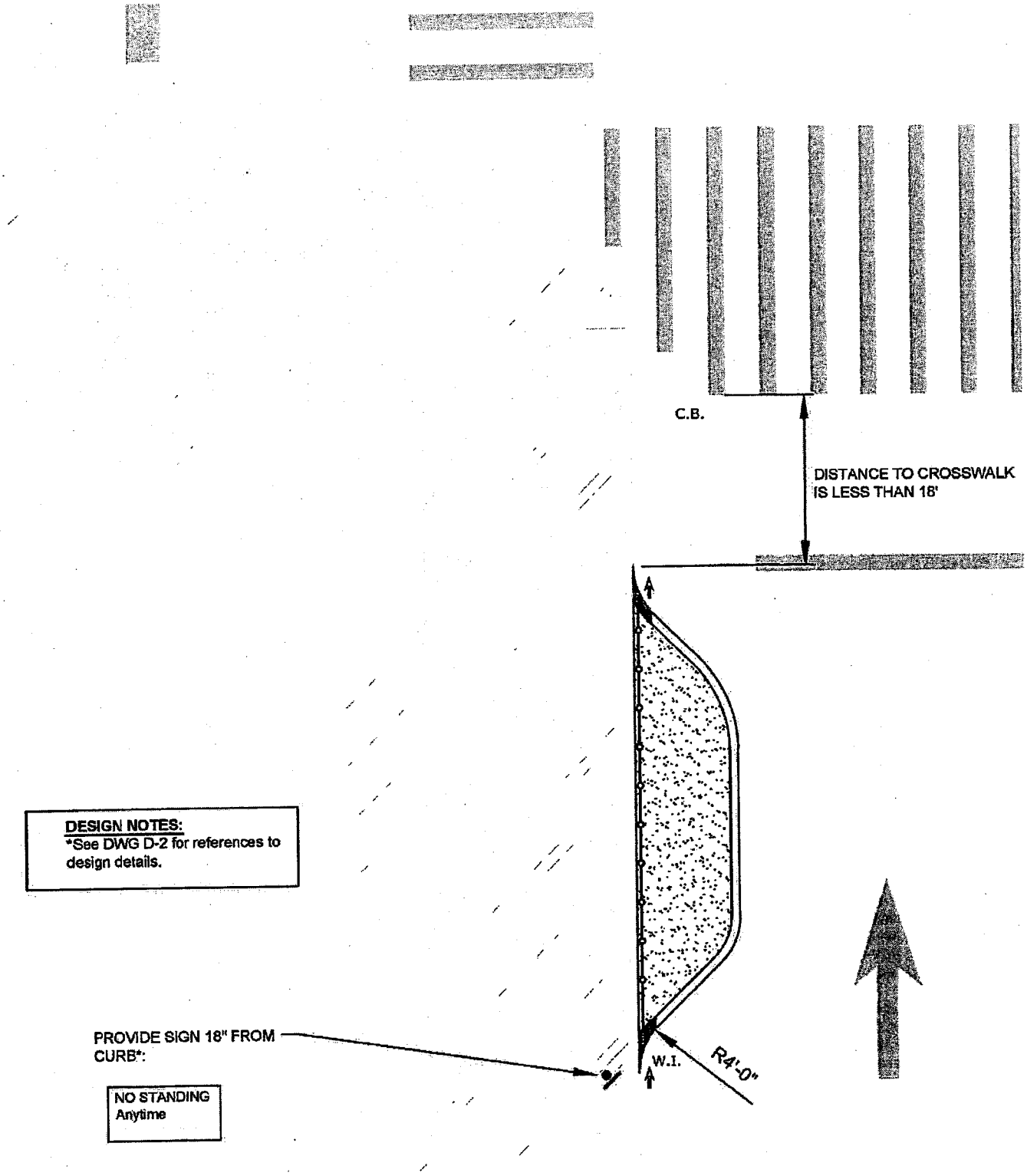

DWG #	DWG TITLE	SCALE	DATE	PAGE
SGS-3B	SGS NECKDOWN NEAR INTERSECTION	1 1/2 " - 1'-0"	6/19/15	11 OF 16

NEW YORK CITY DOT

GREEN INFRASTRUCTURE DESIGN GUIDELINES

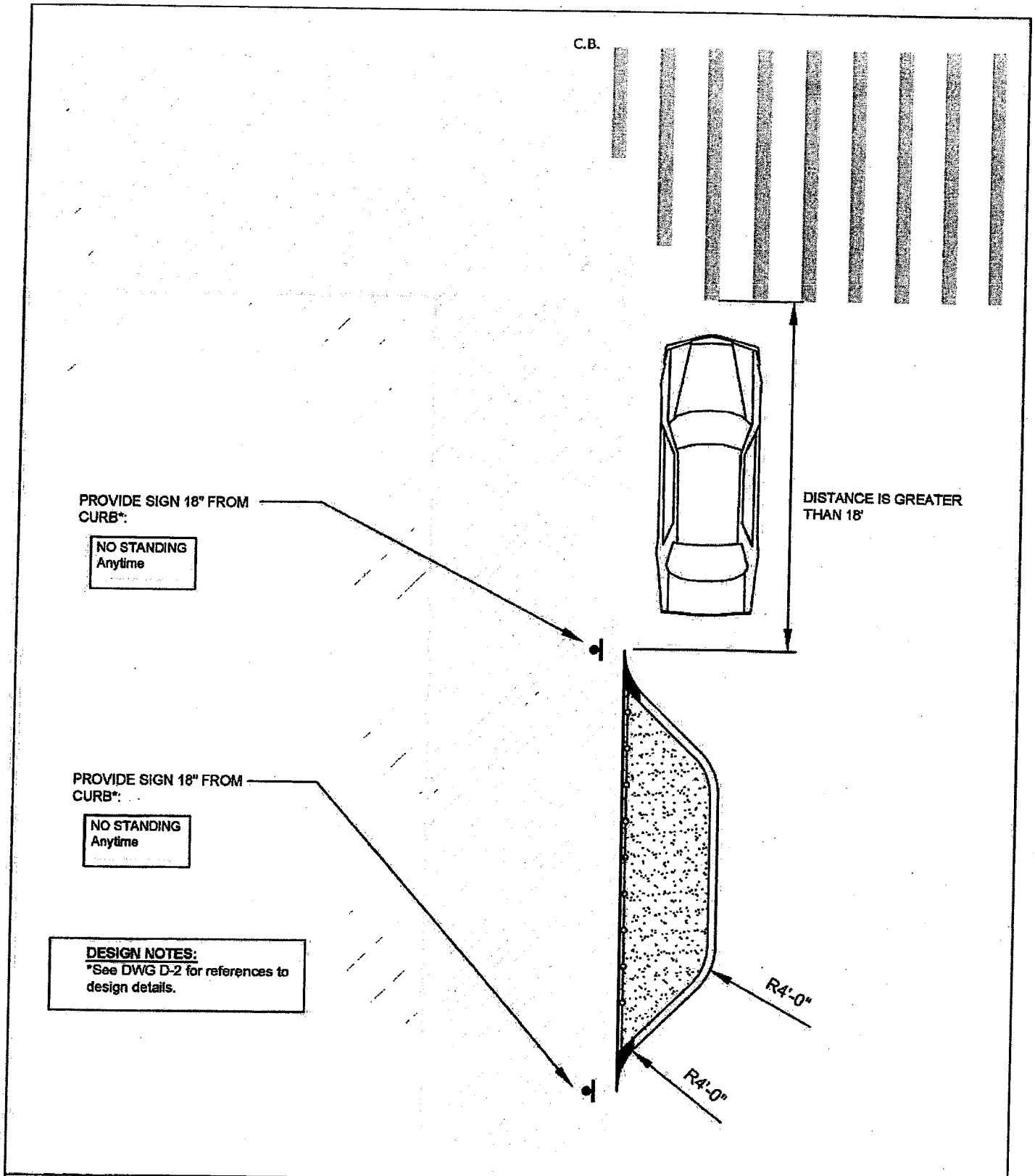

DWG #	DWG TITLE	SCALE	DATE	PAGE
SGS-4A	SGS MID-BLOCK NECKDOWN	1 1/2 " - 1'-0"	6/19/15	12 OF 16

NEW YORK CITY DOT

GREEN INFRASTRUCTURE DESIGN GUIDELINES

T-INTERSECTION DESIGN

DESIGN NOTES:

1. New pedestrian ramps with tactile warning strips required.

   Ramps must be designed to meet ADA compliance.

2. SGS planting bed must be located 5' from crosswalk (see note 3H from NYC DOT Siting Guidelines).

3. To determine location of unmarked crosswalks refer to DWG # R-2

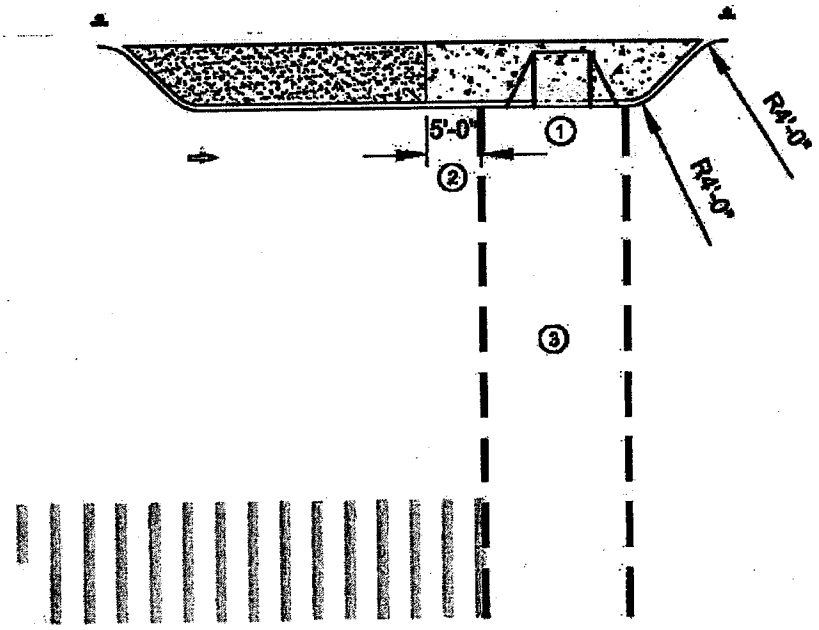

DWG #	DWG TITLE	SCALE	DATE	PAGE
SGS-5A	T-INTERSECTION NECKDOWN	3/4" - 1'-0"	8/14/15	13 OF 16

NEW YORK CITY DOT

GREEN INFRASTRUCTURE DESIGN GUIDELINES

REFERENCE DOCUMENTS

For further detail and standards please refer to the following documents:

Curbs (granite): NYCDOT Infrastructure Design Standards, Standard Details of Construction (July, 2010), pg H-1056

Curbs (historical granite): NYCDOT Infrastructure Design Standards, Standard Details of Construction (July, 2010), pg H-1056A

Curbs (concrete): NYCDOT Infrastructure Design Standards, Standard Details of Construction (July, 2010), pg H-1044

Curbs (steel-faced): NYCDOT Infrastructure Design Standards, Standard Details of Construction (July, 2010), pg H-1010

Pedestrian ramps: NYCDOT Infrastructure Design Standards, Standard Details of Construction (July, 2010), pg H-1011

Reflective object marker: see 2009 Manual on Uniform Traffic Control Devices (MUTCD) for more information on materials

Sidewalk (concrete): NYCDOT Infrastructure Design Standards, Standard Details of Construction (July, 2010), pg H-1045

Sign installation: Borough Engineer SOP for Signs & Markings Installation Crews

Sign - No Standing Anytime: See DWG AD-2 of this document

NEW YORK CITY DEPARTMENT OF TRANSPORTATION SIGN MANUFACTURING ORDER

CHIEF DIVISION OF DESIGN AND CONSTRUCTION
FROM: CHIEF DIVISION OF HIGHWAY DESIGN

DATE: **5/13/2014**

DESIGNATION NO. **PS-1G** LOCATION: _____

(SUPERSEDES SP-1044B & SP-1044BA, SP-10B & SP-10BA, SP-216B & SP-216BA, SP-270B & SP-270BA)

(REVISED)

SIZE COLOR

BACKGROUND: **18" X 12" RED**

BORDER: - - - - -

MARGIN: 3/8" WHITE

SINGLE FACE: DOUBLE FACE: **Y**

REFLECTORIZED: **N**

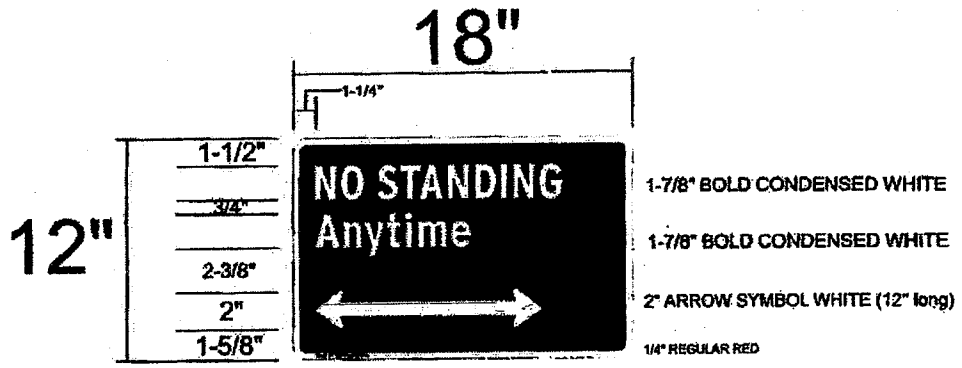

PS-1GA

FIRST USED FOR ORDER NO: _____ QUANTITY: _____

TYPE OF MOUNTING: _____

REQUESTED BY: D/C SCHALLER APPROVED: R. RUSSO

CHECKED BY: Ed Conlon DIRECTOR OF HIGHWAY SIGN DESIGN

DWG #	DWG TITLE	SCALE	DATE	PAGE
D-2	NO STANDING ANYTIME SIGN	N.T.S.	6/19/15	15 OF 16

NEW YORK CITY

GREEN INFRASTRUCTURE DESIGN GUIDELINES

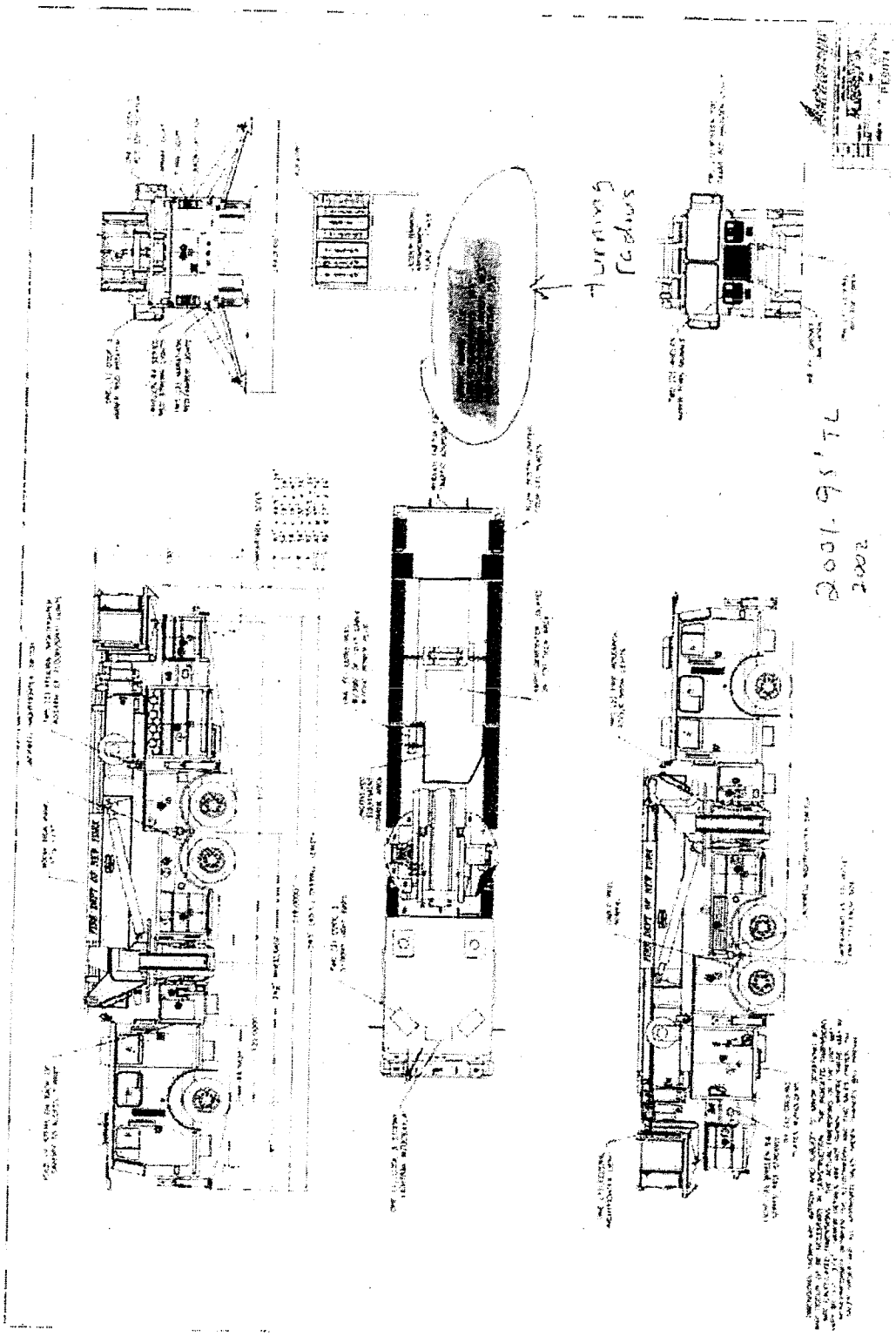

DWG #	DWG TITLE	SCALE	DATE	PAGE
D-3	FDNY FIRE TRUCK SPECIFICATIONS	N.T.S.	7/7/15	16 OF 16

NEW YORK CITY DOT

GREEN INFRASTRUCTURE DESIGN GUIDELINES

THE CITY OF NEW YORK DEPARTMENT OF SANITATION

Interpretive Memorandum # 2

The Contractor is notified that the following Department of Sanitation (DOS) Interpretive Memorandum # 2 does not guarantee that a temporary stockpile location will be approved for this project. In addition, the Department of Design and Construction (DDC) reserves the right to rescind approval for any temporary stockpile location at any time. No payment will be made to the Contractor if either a temporary stockpile location is not approved for this project, or DDC rescinds an approval for any reason.

THE CITY OF NEW YORK Department of Sanitation

S. ELIZABETH SEARLE
Assistant Commissioner
for Legal Affairs

Bureau of Legal Affairs
44 Beaver Street
New York, NY 10004
Telephone (212) 837-8110
FAX (212) 837-8243

Department of Sanitation Rules and Regulations Governing Non-Putrescible Solid Waste Transfer Stations

INTERPRETIVE MEMORANDUM # 2
February 14, 1995

Subject: Temporary Storage and Processing of Construction and Demolition Debris by New York City Agency Contractors

Contractors performing construction work for New York City agencies may be required to excavate dirt, concrete, rock, gravel and similar materials ("construction materials") from a contract site or to remove from a contract site construction materials resulting from construction, demolition, alteration, repair or renovation of structures, streets or buildings. On street construction projects, construction materials required to be excavated or removed may also include asphalt. The purpose of this Interpretive Memorandum is to (a) define the circumstances under which the Department of Sanitation (the "Department") will not deem its Rules and Regulations Governing Non-Putrescible Solid Waste Transfer Stations (the "Rules") to apply to the temporary storage, processing and/or stockpiling (collectively, "stockpiling") of such construction materials and (b) the procedure for ensuring such exemption. It is the responsibility of the contracting agency to oversee its contractors' compliance with the Rules and with this Interpretive Memorandum.

1. <u>When No Transfer Station Permit is Required</u>

Where a City contractor has:

(a) set aside an area of a contract site for stockpiling construction materials excavated from and/or intended for that site; <u>or</u>

(b) received written approval from the contracting agency for an off-site stockpiling location,

the Department will not deem such stockpiling location a transfer station and will not require the contractor to obtain a transfer station permit so long as:

(c) no construction materials or debris from off the contract site are received at the designated location for subsequent transfer to another location (other than the contract site); <u>and</u>

(d) the temporary stockpiling location is clearly described as such in the contract or clearly approved by the construction agency and designated as such in writing to the Department by the agency; <u>and</u>

(e) the construction agency represents in writing to the Department that such agency will monitor the temporary stockpiling location and ensure its clean-up and restoration pursuant to the procedures set out in this memorandum.

Example: *Street Construction Projects*

As part of a contract for street construction, the contractor may be working at one end of a street and using an area at the other end of the street for the temporary stockpiling of construction materials. Both ends of the street are part of the construction contract site. In addition, the contractor may have leased an off-site location for temporary stockpiling of materials, which, following processing, will be reincorporated into the contract site, with some portion of the remainder designated for delivery to a Department disposal facility. Neither location will be regulated by the Department as a transfer station so long as the procedures set out in this memorandum are followed.

2. Procedure for Exception.

Upon a City construction agency's approval of any location to be designated as a temporary processing, storage or stockpiling area, that agency must determine that (a) its contract with the contractor provides for clean-up and restoration of such area by, for example, the contractor's posting of a restoration bond and/or by contractual set-off and (b) the agency has adequate procedures for monitoring the designated area to ensure that it does not violate the provisions set forth in this memorandum and that such location is cleaned up and restored at the completion of the contract work.

The City construction agency must submit an official letter to the Department acknowledging compliance with both (a) and (b) immediately above and representing that the agency will ensure the contractor's compliance. The letter to be submitted must be in substantially the following form, addressed to the Director, Bureau of Waste Disposal, Department of Sanitation, 125 Worth Street, Room 726, New York, NY 10013:

"The New York City Department of _____ (the "Agency") has awarded a construction contract to _____(Contractor)_____ _____ (the "Contractor") for work to be performed at _____(Contract Site)_____.

a. This Agency has approved the following locations to be used by the Contractor for the temporary storage, processing and/or stockpiling of construction materials (the "Stockpiling Locations") excavated from the construction site or intended for the construction site:

_____

_____

_____

_____

b. The terms of the contract require the Contractor to clean up and restore the Stockpiling Locations, whether on or off the contract site, at or before the completion of the contract work.

c. This Agency assumes responsibility for the monitoring of Stockpiling Locations to ensure that only materials received from and/or intended for the construction site are stockpiled at such locations and we will enforce clean-up and restoration of such Locations at the end of their use for temporary stockpiling or at the termination of the contract, whichever occurs earlier, through restoration

bonding requirements and/or contractual set-off provisions such that the costs of clean-up and restoration will not become a charge to the Department or the City. "

3. <u>When a Transfer Station Permit is Required</u>

A transfer station permit will be required under any circumstances other than those outlined above. Except in the specifically defined circumstances set forth in this memorandum, any operator of a location or facility which receives, processes, stores or stockpiles construction and demolition debris or fill material for purposes of transfer to another location, including to a New York City Department of Sanitation facility, and whether or not under contract to the Department for the delivery of such materials, will be fully subject to the Department's transfer station rules and liable for enforcement for violations.

(NO TEXT ON THIS PAGE)

JB-PAGES (2.0)

JOINT BID

NOTICE

THE PAGES CONTAINED IN THIS JOINT BID (JB-PAGES) REPRESENT ADDITIONAL CONTRACT REQUIREMENTS APPLYING TO WORK PERFORMED IN THE PRESENCE OF PRIVATELY OWNED UTILITY FACILITIES.

(NO TEXT ON THIS PAGE)

JOINT BID

DATED: February 8, 2018

1. The Contractor shall be responsible for compliance with all the provisions of the following Articles, Appendixes, Specifications, Sketches and Scope of Work, which are hereby made a part of the original contract documents:

   A. The "JOINT BID WITH PRIVATE UTILITY COMPANIES SPECIAL PROVISIONS" (Pages JB-1 through JB-3); and
   the following Utility specialty work items (contained on Pages JB-5 through JB-21):

   Con Edison

   JB 350- Accommodation of Con Edison overhead utility facilities, poles and appurtenances.
   JB 351- Utility pole supports
   JB 636M- Modification of work methods to accommodate utility hardware during pavement milling and resurfacing operations
   JB 802- Special modification of work for installation of new curbs and sidewalks

   Verizon

   JB 350T/TWC- Overhead accommodation protection of overhead facilities, poles and appurtenances
   JB 402T- Horizontal and vertical adjustment of telecommunications facilities

   B. The Private Utilities reference document called "JOINT-BIDDING SPECIFICATIONS AND SKETCHES FOR LOWER MANHATTAN", dated August 1, 2005, and which is available for pick up between 8:30 A.M. and 4:00 P.M. at 30-30 Thomson Avenue, First Floor Bid Procurement Room, L.I.C., N.Y. 11101;

   C. Private Utilities Participating List (Page JB-22);

   D. Private Utilities Scope of Work (Pages JB-23):
   Con Edison (Pages JB-24 through JB-34), Verizon (Pages JB-35 through JB-37), Charter Spectrum (Pages JB-38 through JB-39); and, Test Pits (Page JB-40); Con Edison Test Pits (Pages JB-41 through JB-42); Verizon Test Pit (Page JB-43); and,

   E. Private Utility drawings (15 Sheets) consisting of:
   - Drawing JB1, General Notes & Conditions (All Utilities) (1 Sheet).
   - Drawing JB2 to JB3, Conduit and Duct Plates (CONED) (2 Sheets).
   - Drawing JB4 to JB5, Low Tension Main and Service Plates (CONED) (2 Sheets)
   - Drawing JB6 to JB7, Gas Mains and Service Plates (CONED) (2 Sheets)
   - Drawing JB8 to JB9, Propose Facility Plates (CONED) (2 Sheets)
   - Drawing JB10 to JB11, Advance Relocation Electric and Gas (CONED) (2 Sheets)
   - Drawing JB12, Existing Facility Plate (VERIZON) (1 Sheet)
   - Drawing JB13 to JB14, Overhead Facility (VERIZON) (2 Sheets)
   - Drawing JB15, Existing Facility Plate (CHARTER SPRECTRUM) (1 Sheet)

2. Refer to the Private Utility reference document called "JOINT-BIDDING SPECIFICATIONS AND SKETCHES FOR LOWER MANHATTAN", Specification for JB 450, pages 56, 57, and 58;

   Note: Items under JB 450 are task driven operation items and are not based on crew size. These items are divided into three unique types, each of which provides a description of applicability and typical use. The "Method of Measurement", on page 57, states that "The actual crew performing the operation will not be considered by the facility operator, in consultation with the Resident Engineer, when determining the applicable Unit Item Type, which shall be only as per the task performed."

3. Refer to the Private Utility reference document called "JOINT-BIDDING SPECIFICATIONS AND SKETCHES FOR LOWER MANHATTAN", Specification for JB 225, page 10, Article A. Description;

   Delete the last four lines of text in their entirety, beginning with the words: "accordance with Specification under Addendum #1, . . .";

   Substitute the following revised text: "accordance with Specification Section 7.18 – Controlled Low Strength Material (CLSM), in the Standard Highway Specification. All backfill within the maximum excavation limits shown in Sketch No. JB 225 shall be of controlled low strength material (CLSM) in compliance with requirements of Section 7.18, and its cost shall be deemed included in this item."

4. Refer to the Private Utility reference document called "JOINT-BIDDING SPECIFICATIONS AND SKETCHES FOR LOWER MANHATTAN", Specification for JB 225, page 10, Article B. Materials;

   Delete the first sentence in its entirety, beginning with the words: "Furnish Controlled Low Strength Material fill or backfill . . .";

   Substitute the following revised sentence: "Furnish Controlled Low Strength Material fill or backfill as required and specified in Section 7.18 – Controlled Low Strength Material (CLSM), of the Standard Highway Specification."

5. Refer to the Private Utility reference document called "JOINT-BIDDING SPECIFICATIONS AND SKETCHES FOR LOWER MANHATTAN", Specification for JB 226, page 12, Article A. Description;

   Delete the last five lines of text in their entirety, beginning with the words: "accordance with Specification under Addendum #1, . . .";

   Substitute the following revised text: "accordance with Specification Section 7.18 – Controlled Low Strength Material (CLSM), in the Standard Highway Specification. All backfill within the maximum excavation limits shown in Sketch No. JB 225 shall be of controlled low strength material (CLSM) backfill in compliance with Section 7.18 in the Standard Highway Specifications, and its cost shall be deemed included in this item."

6. Refer to the Private Utility reference document called "JOINT-BIDDING SPECIFICATIONS AND SKETCHES FOR LOWER MANHATTAN", Specification for JB 226, page 12, Article B. Materials;

   Delete the first sentence in its entirety, beginning with the words: "Furnish controlled low strength material fill or backfill . . .";

   Substitute the following revised sentence: "Furnish controlled low strength material fill or backfill as required and specified in Section 7.18 – Controlled Low Strength Material (CLSM), of the Standard Highway Specification."

7. If the Contractor claims or alleges that delays were caused by a utility for failure to supply and/or provide Specialty Contractors in a timely manner, than the Contractor may bring a claim against the Utility. Neither the Contractor nor the Utility shall bring a delay claim against the City either in a Court of Law or the City's contract dispute resolution board process; and to the extent the Contractor alleges a delay was caused by a Utility, the Contractor will be limited to bringing such legal action in a Court of Law and will not be able to seek arbitration over any delay claims or delay-related claims. If the Contractor and Utility initiate a legal action against each other, this legal action will be outside the jurisdiction of the City's contract dispute resolution board process and the City shall not be a party in the litigation process.

[NO FURTHER TEXT HERE.]

Notices to Bidders

The City is bidding jointly Project ID: SEQ-200531. The City has combined its Public Work, Interference Work, and Utility Work into one bid contract package. All prospective bidders should be alerted to the fact that the City prepared all specifications, drawings, and all other necessary contract documents for the Public Work, Interference Work, and Utility Work.

The City has prepared contract documents which include specifications, drawings and all other necessary contract documents for the Public Work, Interference Work, and Utility Work. The bid items, specifications, and estimated quantities have been designed to fully compensate the Contractor for its costs to perform the Public Work, Interference Work, and Utility Work.

The Contractor agrees that its bid items and prices for the Public Work, Interference Work, and Utility Work shall include all incremental costs and/ or additional compensation for performing Public Work including: coordination of its work with the Utilities, loss of productivity and efficiency, idle time, delays (including any delays occasioned by negotiation of a contract change), change in operations, mobilization, remobilization, demobilization, added cost or expense, loss of profit, other damages or impact costs that may be suffered by the Contractor because of direct or indirect obstructions due to the presence of Utility Facilities, such as conduits, ducts or duct banks containing conductors for live and/or abandoned electric, telephone, cable TV, any type of communication cables, "Non Cost Sharing" gas mains and services, steam mains, and various non-hazardous encasement materials or utility structures located within the Public Work project area.

In the bid solicitation documents, the City has provided estimates of quantities for both Specific Public Work Items and Specific Utility Work Items. Bidders shall be required to bid a unit price on Items. For the purposes of identifying the lowest responsive and responsible bidder, a bidder's unit prices bid shall be calculated on the City's Specific Public Work Items and estimates and the Utilities' Specific Utility Work Items and estimates.

[NO FURTHER TEXT HERE.]

Specialty work items

JB 350 – OVERHEAD ACCOMMODATION PROTECTION OF OVERHEAD FACILITIES, POLES AND APPURTENANCES

A. Description

The Contractor shall provide all supervision, labor, materials, tools, equipment and incidentals required to perform its work in the presence of overhead utilities, including, but not limited to, Electric Facilities (primary, secondary and service connections), telephone facilities, cable television facilities, including fiber optic communications facilities, utility poles and equipment on the poles and related appurtenances. These utilities are subsequently referred to in this specification as "overhead facilities".

B. Materials – N/A

C. Method of Construction

The Contractor shall inspect the site prior to bidding and shall utilize sketches CET 350A-1, CET 350B-1, CET 350C-1 to evaluate the potential impact, if any, of overhead facilities upon performance of the work. The Contractor shall employ a method of operation, including use of appropriate equipment and tools that will enable him to maintain adequate clearances from the overhead facilities during all phases of construction. The Contractor is responsible for performing the work in accordance with all applicable Federal, New York State and Local regulations. The Contractor and/or his agents shall be solely responsible for damages to any overhead lines and appurtenances due to failure to comply with applicable rules, procedures, and practices.

D. Method of Measurement

The quantity to be measured for payment shall be a lump sum measurement to complete the work in the presence of overhead facilities.

E. Price to Cover

The price shall be a lump sum for all supervision, labor, materials, tools, equipment and incidentals required to perform the work in the presence of overhead utilities and to maintain adequate clearance from the overhead facilities during all phases of construction. The price includes, but is not limited, to modification of any methods of operation, use of appropriate equipment, maintenance of traffic, extended performance, loss of productivity, protective measures, delays, change in sequencing and scheduling, and any other costs that may be incurred by the Contractor. Partial payments shall be made in proportion to the percentage (%) of contract completion as determined by the facility operator in consultation with the Resident Engineer. For projects involving installation of piles, the price shall cover the lowering and raising of the pile driver boom under main line cables only, if so requested by the Cablevision representative. Cablevision reserves the right to determine if service wires will be removed. Cablevision forces will be responsible for removing service wires. A Cablevision representative will provide a map of facilities where required. Payment for all work specified shall be made on a one-time basis, no payment for work shall be made for the same operation or for the same utility facility more than once.

F. References

1. New York City DDC Protocol for Implementation of Working Near Con Edison Energized Overhead Electric Distribution Systems
2. Con Edison Overhead Electric Condition Report included with contract plans
3. Guidelines for Working Near Con Edison Energized Overhead Electric Distribution Systems
4. Copy of the OSHA Letter dated August 9, 2004
5. Sketch CET-350A-1
6. Sketch CET-350B-1
7. Sketch CET-350C-1

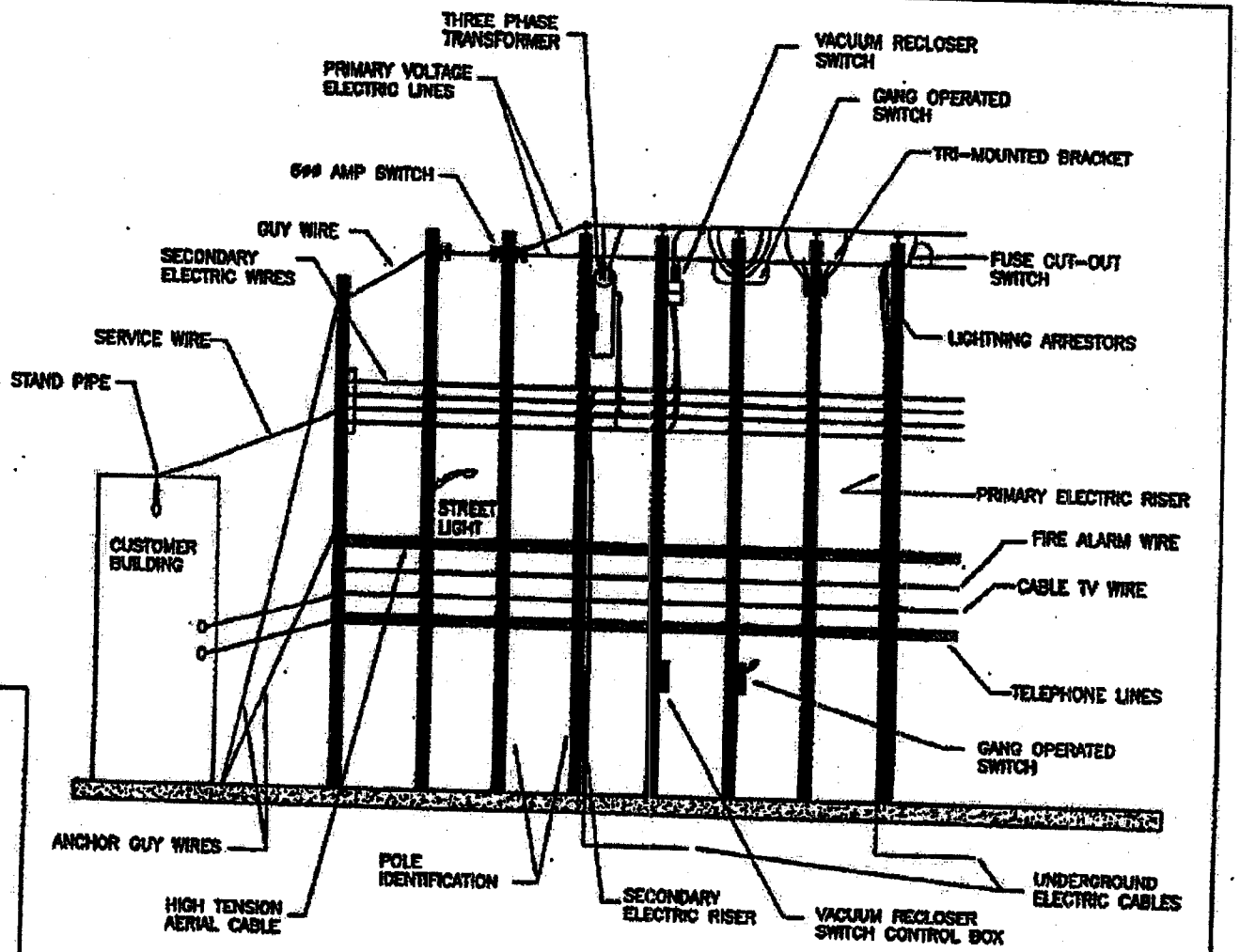

OVERHEAD WIRES & EQUIPMENT – TYPICAL PROFILE

N.T.S.

TYPICAL ARRANGEMENT OF OVERHEAD FACILITIES POLES & APPURTENANCES	LAST REVISION 9/30/2015	SKETCH NO. JB 350 A

ITEM JB 35D SHALL APPLY IF THE CITY CONTRACTOR PERFORMS AN INSTALLATION WITHIN 10 FEET OF UNPROTECTED ENERGIZED OVERHEAD CONDUCTORS OR WITHIN 3 FEET OF *PROTECTED ENERGIZED OVERHEAD CONDUCTORS, AERIAL CABLES AND SELF-SUPPORTING MULTIPLEX SERVICE DROP CONDUCTORS.

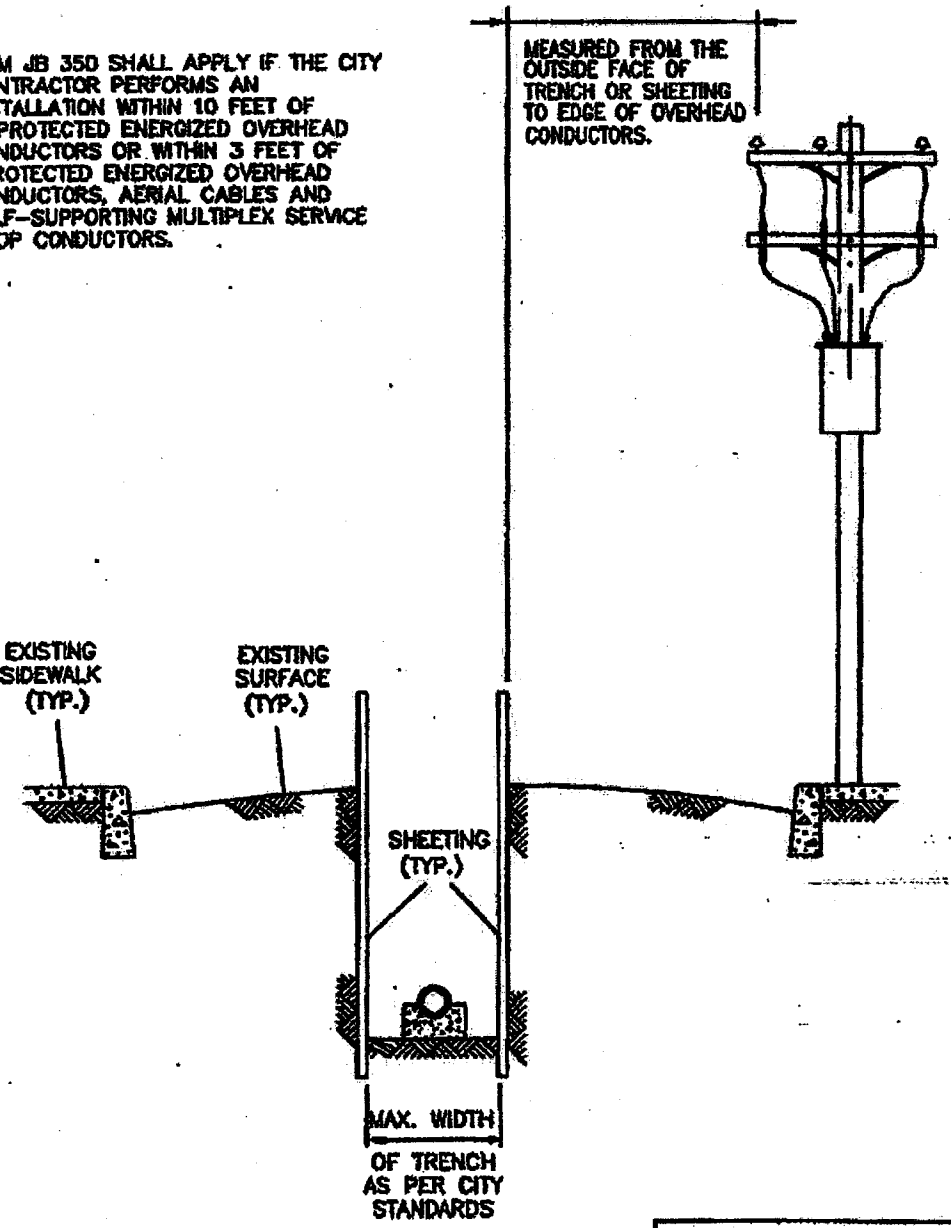

* CONDUCTOR PROTECTION SHALL BE BY APPROVED DEVICES SUCH AS LINE GUARDS, RUBBER HOSES OR BLANKETS OR ANY OTHER DEVICE APPROVED BY THE FACILITY OPERATOR(S) FOR THIS PURPOSE.

REQUIRED CLEARANCES TO ELECTRIC OVERHEAD FACILITIES, POLES & APPURTENANCES	
LAST REVISION 9/30/2015	SKETCH NO. JB 35D B

JB 350T/TWC – OVERHEAD ACCOMMODATION PROTECTION OF OVERHEAD FACILITIES, POLES AND APPURTENANCES

A. Description

The Contractor shall provide all supervision, labor, materials, tools, equipment and incidentals required to perform its work in the presence of overhead telephone facilities (JB 350T), cable television facilities (JB 350TWC), including fiber optic communications facilities, utility poles and equipment on the poles and related appurtenances. These utilities are subsequently referred to in this specification as "overhead facilities". Utility pole supports under JB 351 are not included in this specification.

B. Materials – N/A

C. Method of Construction

The Contractor shall inspect the site prior to bidding to evaluate the potential impact, if any, of overhead facilities upon performance of the work. The Contractor shall employ a method of operation, including use of appropriate equipment and tools that will enable him to maintain adequate clearances from the overhead facilities during all phases of construction. The Contractor is responsible for performing the work in accordance with all applicable Federal, New York State and Local regulations. The Contractor and/or his agents shall be solely responsible for damages to any overhead lines and appurtenances due to failure to comply with applicable rules, procedures, and practices.

D. Method of Measurement

The quantity to be measured for payment shall be a lump sum measurement to complete the work in the presence of overhead facilities.

E. Price to Cover

The price shall be a lump sum for all supervision, labor, materials, tools, equipment and incidentals required to perform the work in the presence of overhead utilities and to maintain adequate clearance from the overhead facilities during all phases of construction. The price includes, but is not limited, to modification of any methods of operation, use of appropriate equipment, extended performance, loss of productivity, protective measures, delays, change in sequencing and scheduling, and any other costs that may be incurred by the Contractor. Partial payments shall be made in proportion to the percentage (%) of contract completion as determined by the facility operator in consultation with the Resident Engineer.
The price shall cover the lowering and raising of pile driver boom under Verizon and Time Warner main line cables only. Verizon service wires will be disconnected and reconnected by Verizon for any pile driving operations only. The contractor shall work under the Verizon & Time Warner Cable service wires under all other work operations. The locations of the mainline cables are shown on the attached sketch.
The price shall include disconnecting and reconnecting, by the contractor, the impacted Time Warner service wires for the pile operation.

F. References

N/A

JB 351 - UTILITY POLE SUPPORTS

A. Description

This section describes the temporary supports for utility poles at locations directed by the facility operator(s), in order to maintain such poles in their existing upright position without disturbing attached wires and equipment. The Contractor shall provide all labor, material, equipment, insurance, and incidentals required to construct, install and maintain an effective support system that will meet the stated objective.

B. Materials

All materials required to construct and maintain an effective support system shall be supplied by the Contractor and approved by the facility operator.

C. Method of Construction

Where directed by the utility representative, the Contractor shall furnish, install and remove utility pole supports and maintain utility poles as shown on sketch JB 351. Alternate methods proposed by the Contractor will be permitted if approved by the facility operator.

D. Method of Measurement

The quantity of utility pole supports to be measured for payment shall be the number of utility poles supported. The Contractor will be paid only once for each utility pole supported and maintained no matter how many different construction operations have an impact on the pole.

E. Price to Cover

The price shall cover the cost of all labor, material, equipment, insurance, and incidentals necessary to furnish, install, maintain and remove utility pole supports to completely support, maintain, protect, and accommodate the integrity of utility poles without disruption of service to customers. The price bid shall also include all additional impact cost associated with working around utility pole supports, poles and appurtenances.

Separate payment will be made for the protection of overhead facilities under the Item JB 360.

F. References

1. Sketch JB 351
2. JB 350

METHODS OF SHORING UTILITY POLES

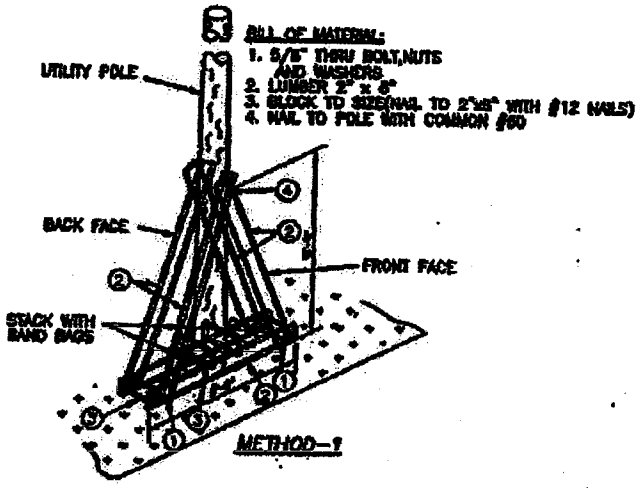

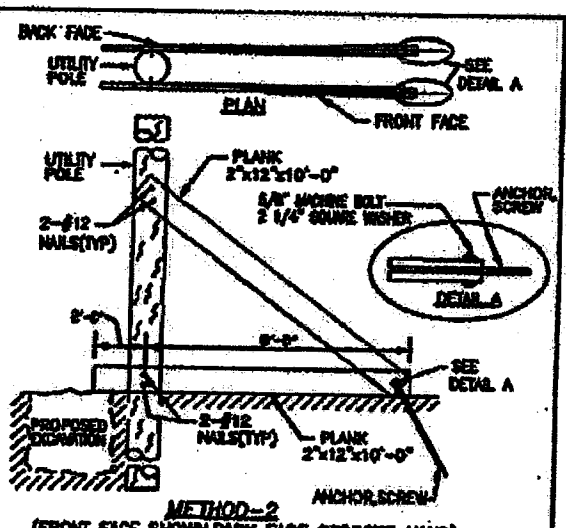

(FRONT FACE SHOWN,BACK FACE OPPOSITE HAND)

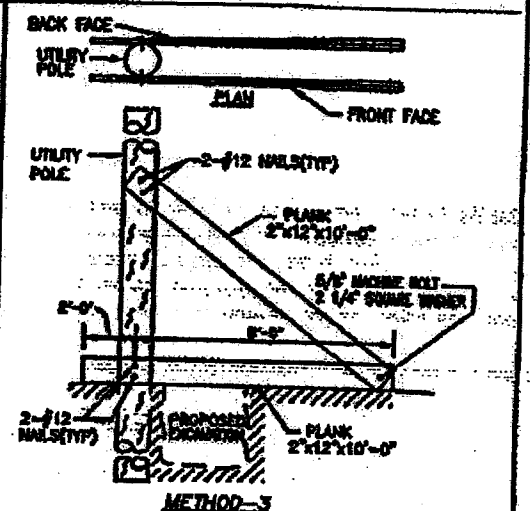

(FRONT FACE SHOWN,BACK FACE OPPOSITE HAND)

NOTES:

1. THESE METHODS OF SHORING ARE GENERAL GUIDES. FIELD CONDITIONS WILL DICTATE WHICH METHOD WILL BE USED.VARIATIONS OF THESE METHODS WHICH ACCOMPLISH THE SAME PURPOSE MAY ALSO BE UTILIZED WHEN APPROVED BY OVERHEAD CONSTRUCTION DEPARTMENT.
2. ANY INFORMATION NOT SHOWN WILL BE DETERMINED IN THE FIELD TO SUIT THE FIELD CONDITIONS WHEN APPROVED BY THE OVERHEAD CONSTRUCTION DEPARTMENT.

METHODS OF SHORING UTILITY POLES	
LAST REVISION 9/30/2015	SKETCH NO. JB 351

JB 402T - HORIZONTAL AND VERTICAL ADJUSTMENT OF TELECOMMUNICATIONS FACILITIES

A. Description

Under this section, the Contractor shall provide all labor, materials, equipment, insurance and incidentals required to adjust and support and protect and maintain and accommodate the integrity of telecommunication facilities including but not limited to:

1. Conduit(s);
2. Cables and Air Pipe
3. Concrete Encased/Capped Conduit Banks

The work shall be performed in accordance with specifications and at the direction of the facility operator in consultation with the Resident Engineer.

B. Materials

All materials used to adjust and support and protect and maintain and accommodate the integrity of utility facilities shall be similar to those indicated on the standard Sketches JB 100 A & 100 A-1 and shall be supplied by the Contractor and be approved by the facility operator in consultation with the Resident Engineer.

Materials used for replacing conduit(s) removed under this item shall be supplied by and installed by the Contractor and shall include but not be limited to the following:

1. Bends
2. Split and Solid Conduit(s) PVC and Steel
3. Couplings and Adapters PVC, Tile and Steel
4. Straps or plastic ties

PVC conduit and fittings shall be as supplied by American Pipe and Plastics, Type "C" or approved equal.
Steel Pipe and fittings shall conform to ASTM A53 Schedule 40
Tile to PVC adaptors shall be as supplied American U-Tel or approved equal.

C. Methods of Construction

Lengths of "wing-back" shall be determined by the facility operator in consultation with the Resident Engineer. All work performed prior to that approval shall be at the contractors risk.

Methods of construction shall include but not be limited to the following:

1 Removal and Support

a. Break with hand held power tools, remove and dispose of plain or reinforced concrete encasement
b. Break with hand held power tools, remove and dispose of conduit(s) enclosures and conduit that contain conductor(s) and/or cable(s) except steel/iron conduits, inner ducts and 1 ¼" to 1 ½" PVC "quad ducts. Breaking – "ringing and ripping" - of

steel/iron conduits belonging to ECS shall be performed by ECS forces only. Contractor shall make safe the work area to accommodate the ECS forces.

c. Support and protect exposed conduits, cables, innerduct and airpipe as shown in Sketch JB 100A-1 and approved by the facility operator in consultation with the Resident Engineer.

d. ECS tenants cables may require inspection, testing and encapsulation before they can be shifted. Contractor shall make safe the work area to accommodate these forces. Contractor shall be notified by the facility operator of the ECS tenant requirements before the conduits are broken-out.

2 Adjust or Move Conductor(s) and/or cable(s) and support

a. Cable shall be relocated horizontally and/or vertically as directed by the facility operator in consultation with the Resident Engineer

b. Support and protect conductors and/or cables as shown on Sketch # JB 100 A-1 and/or as directed by the facility operator.

3. Replacement, Encasement, Protection and Support

a. Place vacant and loaded conduit(s) with solid and/or split conduit(s) and adapters.

1) Vacant Conduit - Repairs to conduits shall not be permitted. All damaged or impaired lengths of conduit(s) shall be removed and replaced with new conduit(s). The number of vacant conduits replaced shall be confirmed by the facility operator.

2) Loaded Conduit - Replacement of conduits that are removed from around existing cable(s) or innerduct shall be accomplished with split plastic (PVC) or split steel conduits as directed by the facility operator. Where split and solid plastic or steel conduit is used, the conduit(s) shall be spaced 1½ inches from each other. All split PVC shall be secured with plastic straps spaced at a maximum distance of eighteen (18") inches. Plastic conduit shall be joined with plastic couplings.

3) Adapting - Joining plastic conduit to existing conduits of other diameters or material shall be done using single or multiple adapters, (supplied by contractor).

b. If due to subsurface conditions, the cover is less than 20" from finished grade, the duct shall be protected with steel plates furnished by the facility operator(s) and measured for payment under Item JB-403.

c. Support and protect cable(s) and/or conductor(s) and conduit(s).

d. Verify vacant conduits and provide pull ropes.

e. Encase all exposed conduit with concrete (f'c = 1200 to 1500 psi maximum) with slump commensurate to completely fill voids around conduits. Concrete encasement shall extend to two (2") inches beyond the limits of the duct bank vertically and horizontally.

D. **Method of Measurement**

The quantity to be measured for breaking out conduits, removing concrete, moving, protecting and supporting conductors and replacing conduits with split and solid conduit, shall be paid for by the linear foot (L.F.) of each conduit replaced. A linear foot of conduit shall be defined as one (1) single conduit measured along its longitudinal axis that has been broken out or moved from its original location either horizontally and/or vertically and measured in its final location. Quad PVC ducts produced as one unit shall be consider one duct for each quad unit. All conduits removed and not restored shall be covered for payment under the appropriate bid items for Removal of Abandoned Masonry for Utility Facilities and/or Removal of Abandoned Utility Conduits.

Multiple tile duct bank protection concrete cover is not considered concrete encasement.

Each type of utility adjustment shall be paid for separately, the types of utility adjustments are defined as follows:

JB-402T.1	Existing Concrete Encased Non-Steel/Iron Conduits Placed in Final Position without Concrete Encasement. (L.F.)
JB-402T.1A	Existing Concrete Encased Non-Steel/Iron Conduits Placed in Final Position with Concrete Encasement. (L.F.)
JB-402T.2	Existing Non-Concrete Encased Non-Steel/Iron Conduits Placed in Final Position without Concrete Encasement. (L.F.)
JB-402T.2A	Existing Non-Concrete Encased Non-Steel/Iron Conduits Placed in Final Position with Concrete Encasement. (L.F.)
JB-402T.R1A	Existing Concrete Encased Steel/Iron Conduits Placed in Final Position with Concrete Encasement. (L.F.)
JB-402T.R2A	Existing Non-Concrete Encased Steel/Iron Conduits Placed in Final Position with Concrete Encasement. (L.F.)
JB-402T.V1	Existing Vacant Concrete Encased Conduits Placed in Final Position without Concrete Encasement. (L.F.)
JB-402T.V1A	Existing Vacant Concrete Encased Conduits Placed in Final Position with Concrete Encasement. (L.F.)
JB-402T.V2	Existing Vacant Non-Concrete Encased Conduits Placed in Final Position without Concrete Encasement. (L.F.)
JB-402T.V2A	Existing Vacant Non-Concrete Encased Conduits Placed in Final Position with Concrete Encasement. (L.F.)
JB-402T.J1	Existing Concrete Encased Conduits Placed in Final Position without Concrete Encasement. (L.F.) in Which Only Conduit Joints are Broken Out and Conduits Remain Intact.

JB-402T.J1A Existing Concrete Encased Conduits Placed in Final Position with Concrete Encasement. (L.F.) in Which Only Conduit Joints are Broken Out and Conduits Remain Intact.

JB-402T.J2 Existing Non-Concrete Encased Conduits Placed in Final Position without Concrete Encasement. (L.F.) in Which Only Conduit Joints are Broken Out and Conduits Remain Intact.

JB-402T.J2A Existing Non-Concrete Encased Conduits Placed in Final Position with Concrete Encasement. (L.F.) in Which Only Conduit Joints are Broken Out and Conduits Remain Intact.

E. Price to Cover

The unit price bid per linear foot (L.F.) of conduit shall cover the cost of all labor, material, equipment, insurance, and incidentals necessary to shift, adjust, support, protect, maintain and accommodate the integrity of utilities without disruption of service to the facility operator's customers and in accordance with contract documents. The price bid shall also include the cost of: breaking out, removal and disposal of plain or reinforced concrete encasements, replacement with field split, split and solid conduits, adapters, clamps, straps and couplings ; verify vacant conduits and provide pull ropes; furnish and install concrete encasement, supports, slings and beams for utility support; changes of sheeting method and/or configuration when required and where necessary to accommodate the utilities during all phases of contract work;; and removal of sheeting around the utilities, and all else necessary and required to complete the work.

The unit price shall include providing access and assisting the facility operator specialized crews in shifting and supporting the conduits during pipe-ripping operations and all else necessary as required to complete the work including but not limited to temporary work platform and temporary weather protection. The unit price shall include providing access to the facility operator tenants to verify and test cables before, during and after the pipe ripping operation completed by the facility operator or specialized contractor hired by the facility operator and after conduit removal by the Contractor The unit price shall include, but not limited to, delays and stand-by time associated with the pipe-ripping operations, opening and closing of fences; removal and replacement of temporary timber curb and opening and closing of traffic plates. JB 450 shall not be used in conjunction with JB-402T.R1 & JB 402T.R1A, as these items cover access to the work site at all times.

F. References

1. Sketches JB 100A and 100A-1
2. JB 403
3. American Pipe and Plastics, P.O. Box 577, Binghamton, N.Y. 13902
4. American U-Tel, 9760 Smith Rd., Willoughby, Ohio 44094

JB 636M – MODIFICATION OF WORK METHODS TO ACCOMMODATE UTILITY HARDWAREDURING PAVEMENT MILLING AND RESURFACING OPERATIONS

A. Description

Under this section, the Contractor shall provide all labor, materials, equipment, insurance, and incidentals required to maintain, protect, and accommodate the integrity of utility hardware during pavement milling and resurfacing operations. Hardware includes castings, frames, and covers on utility structures, valve box cover castings, concrete collars around steam castings, and all other hardware protecting utility facilities.

B. Materials – N/A

C. Method of Construction

Removal of existing pavement around utility hardware shall be performed by the Contractor with extreme caution by utilizing appropriate methods of operation, by employing specialized construction equipment, and by special operations and sequencing.

The Contractor shall not mill existing pavement within 12" of the perimeter of utility hardware. Removal of pavement within 12" of the perimeter of utility hardware shall be by cutting with pavement breakers or other methods as proposed by the Contractor. All methods shall be presented to the facility operator by the Contractor prior to the start of construction and shall be approved by the facility operator.

During removal of existing pavement and for the duration of project, the Contractor shall protect utility hardware from damage by the Contractor's operations and traffic. Contractor shall also provide all necessary protection to pedestrians to prevent injury to pedestrians when crossing utility hardware during the project. Utility street hardware damaged by the Contractor or others during the project shall be replaced by the Contractor at Contractor's expense.

The Contractor shall not place any paving materials over utility hardware during the project and shall maintain free and unobstructed access to all structures at all times. The Contractor shall maintain all covers free of debris and protect the covers, if necessary, from residue that results from the paving operation.

D. Method of Measurement

The quantity to be measured for payment shall be the number of utility hardware units (EA.) in each size group actually adjusted as specified under each item. The size of each utility hardware unit, measured in width, shall be defined as either, the diameter of the exposed edge of the casting, the exposed edge of elliptical castings measured along the major axis or the exposed edge of the longest side of rectangular frames as indicated in sketch JB 636E.

JB 636 MA – Modification of Work Methods to Accommodate Utility Hardware (Under 7" Width)

JB 636 MB – Modification of Work Methods to Accommodate Utility Hardware (7" to under 14" Width)

JB 636 MC – Modification of Work Methods to Accommodate Utility Hardware (14" to under 30" Width)

JB 636 MD – Modification of Work Methods to Accommodate Utility Hardware (30" to under 34" Width)

JB 636 ME – Modification of Work Methods to Accommodate Utility Hardware (34" to under 41" Width)

JB 636 MG – Modification of Work Methods to Accommodate Utility Hardware (41" to under 75" Width)

JB 636 MH – Modification of Work Methods to Accommodate Utility Hardware (75" to under 125" Width)

JB 636 MI – Modification of Work Methods to Accommodate Utility Hardware (125" to under 170" Width)

JB 636 SMB – Modification of Work Methods to Accommodate Utility Steam Hardware (Under and Including 8" Width)

JB 636 SMC – Modification of Work Methods to Accommodate Utility Steam Hardware (Above 8" to 34" Width)

A. Price to Cover

The price to modify work methods to accommodate Utility Hardware during pavement milling and resurfacing operations shall include the cost of all incremental labor, materials, time, equipment, insurance and incidentals required for removal and disposal of existing pavement, installation and compaction of base and wearing course materials, installation and compaction and removal of temporary asphalt concrete mixture, tack coating; in accordance with the plans, the specifications and the directions of the facility operator. The price to cover shall further include the cost of maintaining, protecting, and accommodating the integrity of utility street hardware during the project and during the performance of milling and resurfacing and the incremental additional work and effort made necessary to protect pedestrians from injury when crossing utility hardware during the project. The price to cover shall further include additional areas of modification of work methods beyond 12" of the perimeter of the utility street hardware due to the milling equipment and the location of other utility hardware, city street hardware, utility poles, street lights, traffic signals, curbs, sidewalks, medians, guide rails, pavement stops, cobblestones, and pavers. The price to cover for items JB 636 SMB and JB 636 SMC shall also include modification of work methods due to existing concrete collars surrounding these castings.

Payment for all work herein specified shall be made on a one-time basis only; no payment for work herein specified shall be made for the same area more than one time. Adjustment to utility hardware shall be paid for under the appropriate JB 636E item.

F. References

1. Sketch JB 636E
2. JB Item 636E

SEQ-20053

ROUND COVERS

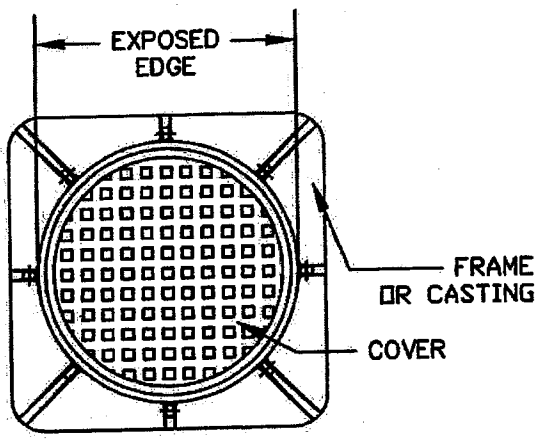

RECTANGULAR COVERS/FRAMES

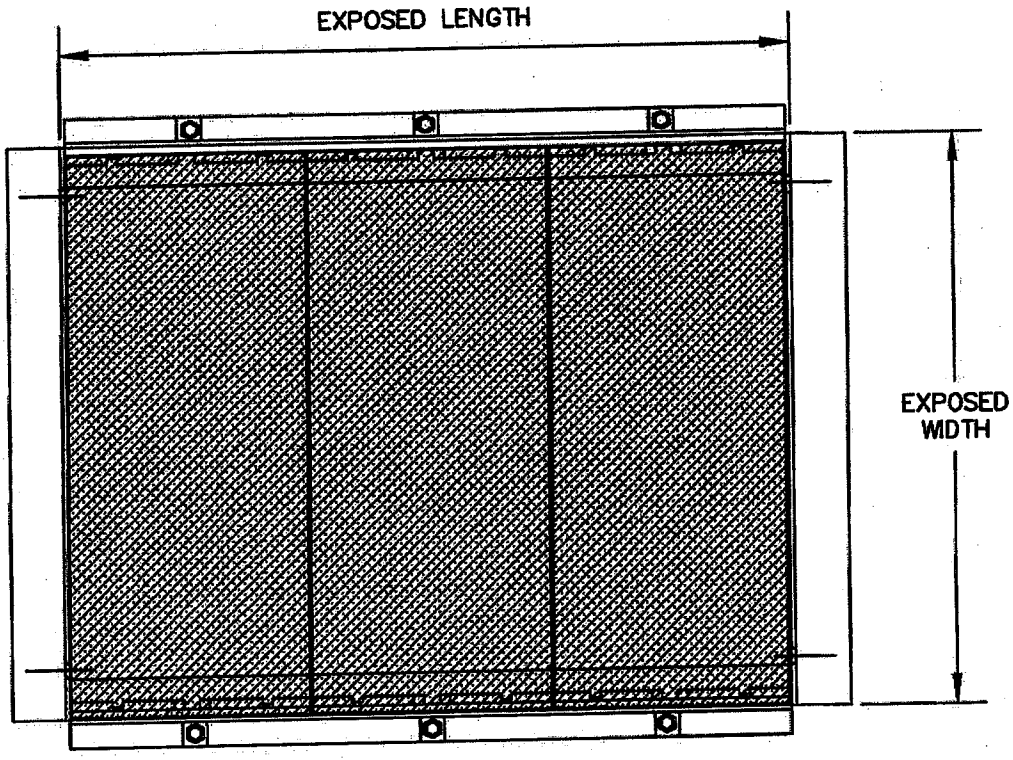

PLAN VIEW

N.T.S.

ADJUSTMENT OF UTILITY HARDWARE	
LAST REVISION 6/30/2015	SKETCH NO. JB 636E

JB-18A

JB 802 - SPECIAL MODIFICATION OF WORK FOR INSTALLATION OF NEW CURBS AND SIDEWALKS

A. Description

Under this Section, the Contractor shall be required to modify work methods of installing new curb and sidewalk in order to maintain, protect and accommodate the integrity of private Utility Facilities located within a zone of protection immediately beneath existing sidewalk and curb designated to be replaced under other Contract Items. The zone of protection shall define an area of curb and sidewalk where: work is within the vicinity of private Utility Facilities as shown on the Special Care Excavation Plan or where utilities are encountered during construction that are within 18 inches of either face of curb and/or 12 inches of the base material of proposed curb and/or sidewalk.

B. Materials – N/A

C. Method of Operation/Construction

Once clearances have been verified by available records to the satisfaction of the facility operator, the Contractor shall exercise extreme caution to install new curb and sidewalks within zoned areas of protection. Exercising extreme caution shall mean utilizing appropriate methods of operation/construction, special operations and sequencing, and by employing hand labor, using hand held tools only, under the personal direction of the appropriate facility operator. The work shall incorporate, but not be limited by, the following restrictions:

1. Removal of Existing Curb and Sidewalk

Removal of existing curb and sidewalk material shall be performed by saw cutting the curb and sidewalk, for a depth of not less than 2", to assist the Contractor in breaking up the concrete curb and sidewalk for removal by hand. Curb and sidewalk removal shall be done with hand labor, using hand held tools only while working from adjacent undisturbed sidewalk and/or pavement. Furthermore, it shall be understood to mean that digging and/or excavating directly with power-mechanized earth moving equipment will not be permitted. Power mechanized earth moving equipment may only be used as a depository of material removed from the excavation by hand as described above. All equipment, methods, and maintenance and protection provisions shall require full authorization by the facility operator.

2. Preparation and Installation of New Curb and Temporary and New Sidewalk

Backfilling, filling, grading of sub base, and installation of new curb and both temporary and new sidewalk, as required under other Contract Items, shall be performed utilizing materials, equipment and methods of construction that will insure the integrity of the private utility facilities and at the same time meet all requirements for this work as specified in other sections of this contract.

3. Compaction

The Contractor shall compact all sub-grade and new sub-base materials by utilizing native and/or blended fill material, equipment and methods of construction that will ensure integrity of private Utility Facilities and at the same time meet all requirements for compaction as specified in Section 4.11 of the Standard Highway Specifications.

4. Powered Excavating Equipment Limitations

The Contractor shall not employ powered or mechanical excavating equipment within the zone of protection. Powered or mechanical excavating equipment may only be used as a depository for material removed from the excavation by hand as described above.

The Contractor shall not be permitted to store, stand and/or travel equipment/vehicles on specified unpaved zoned protection areas.

D. Method of Measurement

1. JB 802A

The quantity of "Special Care Excavation and Restoration for Sidewalk Work" to be measured for payment shall be the number of square feet (S.F.) of new sidewalk actually installed under other contract items within the zone of protection areas requested by the facility operator. For payment purposes, the horizontal limits for a zone of protection area shall be defined as the area designated on the plans or an area equal to the length of the designated facility multiplied by its width plus 18 inches on each side. Where overlapping of zones occur due to multiple facilities, the area will be modified to one zone measured from the outside limits. Where the 18-inch area falls beyond the curb line the outside boundary shall be the curb line.

2. JB 802B

The quantity of "Special Care Excavation and Restoration for Curb Work" to be measured for payment shall be equal to the number of linear feet (L.F.) of new curb actually installed under other contract items within the zone of protection areas requested by the facility operator.

E. **Price to Cover**

1. **JB 802A**

The contract price per square foot for "Special Care Excavation and Restoration for Sidewalk Work" shall be the incremental cost difference of all labor, materials, equipment, insurance and incidentals required for excavation and disposal of pavement, base and all other material to new sub-grade within and adjacent to zone of protection areas; saw cutting, grading, preparation of sub-grades, backfilling and compaction within zone of protection areas; all in accordance with the plans, the specifications and the directions of the facility operator. The price shall further include the cost of maintaining, protecting and accommodating the integrity of private Utility Facilities during the performance of sidewalk reconstruction (under other Contract items) within zone of protection areas designated on the plans or as directed by the facility operator.

2. **JB 802B**

The contract price per linear foot for "Special Care Excavation and Restoration for Curb Work" shall be the incremental cost difference of all labor, materials, equipment, insurance and incidentals required to install new curbs and temporary restoration material under other Contract items, within and adjacent to zone of protection areas; all in accordance with the plans, the specifications and the directions of the facility operator. The price shall further include the cost of maintaining, protecting, and accommodating the integrity of private Utility Facilities during the performance of curb reconstruction (under other Contract items) within zone of protection areas designated on the plans or as directed by the facility operator.

Payment for all work specified herein shall be made on a one-time basis only; no payment will be made for the same area of sidewalk or length of curb more than one time. When the installation of curb and sidewalk are performed as separate operations on the same location, payment shall be made separately for each operation. In addition, work under these items shall not be paid in combination with other utility items.

F. **References**

1. Section 4.11 Standard Highway Specification

LISTING OF COMPANIES NAMED FOR THIS CONTRACT

SEQ-200531
STORM SEWER EXTENSION
BOROUGH OF QUEENS

COMPANY NAME	CONTACT NAME	CONTACT TELEPHONE
CON EDISON	O'NEILL WRIGHT	212-460-3870
VERIZON	ROHAN ECCLES	718-977-8142
CHARTER	JOHN PIAZZA	718-888-4261

PRIVATE UTILITY
SCOPE OF WORK

(NO TEXT IN THIS SECTION)

JOINT BID WORKSHEET

ENGINEER'S ESTIMATE OF QUANTITY AND TYPES OF INTERFERENCE
FOR CONSOLIDATED EDISON COMPANY OF NEW YORK
SEQ200531
STORM SEWER EXTENSION
BOROUGH OF QUEENS

JOINT BID ITEM NUMBER	DESCRIPTION	UNITS	ESTIMATED QUANTITY
JB 100.1	UTILITIES CROSSING TRENCH FOR CATCH BASIN CHUTE CONNECT. AND/OR TESTPIT (TYPE .1)	EA	7
JB 100.2	UTILITIES CROSSING TRENCH FOR CATCH BASIN CHUTE CONNECT. AND/OR TESTPIT (TYPE .2)	EA	3
JB 101.1	UTILITIES CROSSING TRENCH FOR SEWERS UP TO AND INCL. 24" DIAMETER (TYPE .1)	EA	5
JB 101.2	UTILITIES CROSSING TRENCH FOR SEWERS UP TO AND INCL. 24" DIAMETER (TYPE .2)	EA	5
JB 104.1	UTILITIES CROSSING TRENCH FOR SEWERS OVER 48" TO 54" DIAMETER (TYPE .1)	EA	5
JB 104.2	UTILITIES CROSSING TRENCH FOR SEWERS OVER 48" TO 54" DIAMETER (TYPE .2)	EA	1
JB 105.1	UTILITIES CROSSING TRENCH FOR SEWERS OVER 54" TO 60" DIAMETER (TYPE .1)	EA	7
JB 105.2	UTILITIES CROSSING TRENCH FOR SEWERS OVER 54" TO 60" DIAMETER (TYPE .2)	EA	1
JB 108.1	UTILITIES CROSSING TRENCH FOR WATERMAIN UP TO AND INCL. 12" DIAMETER (TYPE .1)	EA	19
JB 108.2	UTILITIES CROSSING TRENCH FOR WATERMAIN UP TO AND INCL. 12" DIAMETER (TYPE .2)	EA	7
JB 200	EXTRA DEPTH EXCAVATION OF CATCH BASIN CHUTE CONNECTION PIPES	LF	51
JB 225	INSTALLATION AND REMOVAL OF CATCH BASINS WITH UTILITY-INTERFERENCES	EA	8
JB 227	REMOVAL OF CATCH BASINS WITH UTILITY INTERFERENCES	EA	1
JB 300	SPECIAL CARE EXCAVATION AND BACKFILING	CY	134
JB 303	FURNISH, DELIVER AND INSTALL TYPE 3/8 CLEAN SAND BACKFILL	CY	83
JB 330E.2	SUPPORT & PROTECT ELEC, GAS & STEAM FACILITIES DURING EXCAVATION OF CITY TRENCH WHEN FACILITIES LIE W/IN TRENCH LIMITS (TYPE .2)	LF	8
JB 350	OVERHEAD ACCOMMODATION PROTECTION OF OVERHEAD	LS	1

JOINT BID WORKSHEET
ENGINEER'S ESTIMATE OF QUANTITY AND TYPES OF INTERFERENCE
FOR CONSOLIDATED EDISON COMPANY OF NEW YORK
SEQ200531
STORM SEWER EXTENSION
BOROUGH OF QUEENS

JOINT BID ITEM NUMBER	DESCRIPTION	UNITS	ESTIMATED QUANTITY
JB 351	UTILITY POLE SUPPORTS	EA	2
JB 400	TEST PITS FOR UTILITY FACILITIES	CY	50
JB 401	TRENCH EXCAVATION FOR ADJUSTMENT OF UTILITIES	CY	22
JB 402.2	EXISTING OCCUPIED NON-CONCRETE ENCASED CONDUITS PLACED IN FINAL POSITION W/O CONCRETE ENCASEMENT	LF	40
JB 450.1	CONSTRUCTION FIELD SUPPORT REQUIRING AVERAGE SIZE SURVEY CREW PERFORMING TYPICAL SURVEY FUNCTIONS (TYPE .1)	CRHRS	1
JB 450.2	CONSTRUCTION FIELD SUPPORT REQUIRING AVERAGE SMALL SIZE CREW CAPABLE OF PERFORMING VARIOUS TASKS (TYPE .2)	CRHRS	20
JB 450.3	CONSTRUCTION FIELD SUPPORT REQUIRING AVERAGE MEDIUM SIZE CREW CAPABLE OF PERFORMING VARIOUS TASKS (TYPE .3)	CRHRS	28
JB 500	REMOVAL OF ABANDONED UTILITY CONDUITS (NON-CONCRETE ENCASED)	LF	2,564
JB 501	REMOVAL OF ABANDONED MASONRY FOR ELEC. AND TEL. FACILITIES	CY	12
JB 636 ED	ADJUSTMENT OF UTILITY HARDWARE (30" TO UNDER 34" WIDTH)	EA	3
JB 636 MD	MODIFICATION OF WORK METHODS TO ACCOMMODATE UTILITY HARDWARE (30" TO UNDER 34" WIDTH)	EA	6
JB 700	SPECIAL MODIFICATION OF WORK METHODS TO ACCOMMODATE/PROTECT UNDERGROUND FACILITIES WITH LIMITED COVER	CY	127
JB 710.1	REMOVAL OF ABANDONED UTILITY STEEL/CAST IRON/PLASTIC, UP TO AND INCL. 12" DIAMETER PIPES	LF	138
JB 802A	SPECIAL CARE EXCAVATION AND RESTORATION FOR SIDEWALK WORK	SF	50
JB 802B	SPECIAL CARE EXCAVATION AND RESTORATION FOR CURB WORK	LF	10
JB 900	EXTRA UTILITY WORK COSTS ALLOWANCE	FS	1

August 16, 2017

CON EDISON JOINT BIDDING SCOPE OF WORK
SUPPORT AND PROTECTION
SEQ200531
STORM SEWER EXTENSION
BOROUGH OF QUEENS

JB 100.1 **UTILITIES CROSSING TRENCH FOR CATCH BASIN CHUTE CONNECT. AND/OR TESTPIT (TYPE .1)** **EA**

At the following locations:

W/S Cross Is. Pkwy. W. Serv. Rd., N/O 89th Ave.
N/S 88th Dr., W/O Cross Is. Pkwy. W. Serv. Rd.
W/S Cross Is. Pkwy. W. Serv. Rd., N/O 88th Dr.
N/S 88th Rd., W/O Cross Is. W. Serv. Rd.
N/S 87th Ave., W/O Cross Is. Pkwy. W. Serv. Rd.
N/S 87th Ave., E/O 241 St.
N/S 239th St., I/O 87th Ave.

Total Quantity for JB 100.1 = 7

JB 100.2 **UTILITIES CROSSING TRENCH FOR CATCH BASIN CHUTE CONNECT. AND/OR TESTPIT (TYPE .2)** **EA**

At the following locations:

W/S Cross Is. Pkwy. W. Serv. Rd., S/O 88th Ave.
W/S Cross Is. Pkwy. W. Serv. Rd., N/O 88th Ave.

Total Quantity for JB 100.2 = 3

JB 101.1 **UTILITIES CROSSING TRENCH FOR SEWERS UP TO AND INCL. 24" DIAMETER (TYPE .1)** **EA**

At the following locations:

W/S Cross Is. Pkwy. W. Serv. Rd., I/O 88th Dr.
S/S 239th St., W/O 87th Ave.
N/S 239th St., I/O 87th Ave.

Total Quantity for JB 101.1 = 5

JB 101.2 **UTILITIES CROSSING TRENCH FOR SEWERS UP TO AND INCL. 24" DIAMETER (TYPE .2)** **EA**

At the following locations:

W/S Cross Is. Pkwy. W. Serv. Rd., I/O 89th Ave.
W/S Cross Is. Pkwy. W. Serv. Rd., I/O 88th Rd.
W/S Cross Is. Pkwy. W. Serv. Rd., I/O 88th Ave.

Total Quantity for JB 101.2 = 5

JB 104.1 **UTILITIES CROSSING TRENCH FOR SEWERS OVER 48" TO 54" DIAMETER (TYPE .1)** **EA**

At the following locations:

W/S Cross Is. Pkwy. W. Serv. Rd., I/O 89th Ave.
E/S Cross Is. Pkwy. W. Serv. Rd., I/O 88th Dr.
E/S Cross Is. Pkwy. W. Serv. Rd., I/O 88th Rd.
E/S Cross Is. Pkwy. W. Serv. Rd., N/O 88th Rd.
E/S Cross Is. Pkwy. W. Serv. Rd., I/O 87th Ave.

Total Quantity for JB 104.1 = 5

JB 104.2 **UTILITIES CROSSING TRENCH FOR SEWERS OVER 48" TO 54" DIAMETER (TYPE .2)** **EA**

At the following locations:

E/S Cross Is. Pkwy. W. Serv. Rd., N/O 88th Ave.

Total Quantity for JB 104.2 = 1

JB 105.1 **UTILITIES CROSSING TRENCH FOR SEWERS OVER 54" TO 60" DIAMETER (TYPE .1)** **EA**

At the following locations:

F/O Hse. 241-32 87th Ave.
F/O Hse. 241-24 87th Ave.
F/O Hse. 241-10 87th Ave.
S/S 87th Ave., B/W 239th St. and 241 St.

Total Quantity for JB 105.1 = 7

JB 105.2 **UTILITIES CROSSING TRENCH FOR SEWERS OVER 54" TO 60" DIAMETER (TYPE .2)** **EA**

At the following locations:

I/O Cross Is. Pkwy. W. Serv. Rd. and 87th Ave.

Total Quantity for JB 105.2 = 1

JB 108.1 UTILITIES CROSSING TRENCH FOR WATERMAIN UP TO AND INCL. 12" DIAMETER (TYPE 1) **EA**

At the following locations:

W/S Cross Is. Pkwy. W. Serv. Rd., I/O 89th Ave.
W/S Cross Is. Pkwy. W. Serv. Rd., N/O 89th Ave.
W/S Cross Is. Pkwy. W. Serv. Rd., I/O 88th Dr.
W/S Cross Is. Pkwy. W. Serv. Rd., N/O 88th Dr.
W/S Cross Is. Pkwy. W. Serv. Rd., I/O 88th Rd.
W/S Cross Is. Pkwy. W. Serv. Rd., I/O 88th Rd.
W/S Cross Is. Pkwy. W. Serv. Rd., N/O 88th Rd.
W/S Cross Is. Pkwy. W. Serv. Rd., N/O 88th Rd.
W/S Cross Is. Pkwy. W. Serv. Rd., I/O 87th Ave.
S/S 87th Ave., B/W 239th St. and 241 St.
N/S 239th St., W/O 87th Ave.
N/S 239th St., I/O 87th Ave.
F/O Hse. 86-36 239th St.

Total Quantity for JB 108.1 = 19

JB 108.2 UTILITIES CROSSING TRENCH FOR WATERMAIN UP TO AND INCL. 12" DIAMETER (TYPE 2) **EA**

At the following locations:

West Sidewalk, Cross Is. Pkwy. W. Serv. Rd., S/O 89th Ave.
W/S Cross Is. Pkwy. W. Serv. Rd., I/O 89th Ave.
W/S Cross Is. Pkwy. W. Serv. Rd., I/O 88th Rd.
W/S Cross Is. Pkwy. W. Serv. Rd., I/O 88th Ave.
W/S Cross Is. Pkwy. W. Serv. Rd., N/O 88th Ave.
W/S Cross Is. Pkwy. W. Serv. Rd., N/O 88th Ave.

Total Quantity for JB 108.2 = 7

JB 200 EXTRA DEPTH EXCAVATION OF CATCH BASIN CHUTE CONNECTION PIPES **LF**

At the following locations:

W/S Cross Is. Pkwy. W. Serv. Rd., N/O 89th Ave.
W/S Cross Is. Pkwy. W. Serv. Rd., S/O 88th Ave.
W/S Cross Is. Pkwy. W. Serv. Rd., N/O 88th Ave.

Total Quantity for JB 200 = 51

CON EDISON JOINT BIDDING SCOPE OF WORK
SUPPORT AND PROTECTION
SEQ200531
STORM SEWER EXTENSION
BOROUGH OF QUEENS

JB 225 **INSTALLATION AND REMOVAL OF CATCH BASINS WITH UTILITY INTERFERENCES** **EA**

At the following locations:

W/S Cross Is. Pkwy. W. Serv. Rd., N/O 89th Ave.
N/S 88th Dr., W/O Cross Is. Pkwy. W. Serv. Rd.
W/S Cross Is. Pkwy. W. Serv. Rd., N/O 88th Dr.
N/S 88th Rd., W/O Cross Is. W. Serv. Rd.
W/S Cross Is. Pkwy. W. Serv. Rd., S/O 88th Ave.
W/S Cross Is. Pkwy. W. Serv. Rd., N/O 88th Ave.
N/S 87th Ave., W/O Cross Is. Pkwy. W. Serv. Rd.
N/S 87th Ave., E/O 241 St.

Total Quantity for JB 225 = 8

JB 227 **REMOVAL OF CATCH BASINS WITH UTILITY INTERFERENCES** **EA**

At the following locations:

N/S 87th Ave., E/O 241 St.

Total Quantity for JB 227 = 1

JB 300 **SPECIAL CARE EXCAVATION AND BACKFILLING** **CY**

At the following locations:

W/S Cross Is. Pkwy. W. Serv. Rd., B/W 90th Ave. and 89th Ave.
W/S Cross Is. Pkwy. W. Serv. Rd., B/W 89th Ave. and 88th Dr.
W/S Cross Is. Pkwy. W. Serv. Rd., B/W 88th Dr. and 88th Rd.
S/S 88th Rd., W/O Cross Is. Pkwy. W. Serv. Rd.
W/S Cross Is. Pkwy. W. Serv. Rd., B/W 88th Rd. and 88th Ave.
S/S 87th Ave., B/W 239th St. and 241 St.
F/O Hse. 86-36 239th St.

Total Quantity for JB 300 = 134

JB 303 **FURNISH, DELIVER AND INSTALL TYPE 3/8 CLEAN SAND BACKFILL** **CY**

At the following locations:

I/O Cross Is. Pkwy. W. Serv. Rd. and 89th Ave.
I/O Cross Is. Pkwy. W. Serv. Rd. and 88th Ave.
I/O Cross Is. Pkwy. W. Serv. Rd. and 87th Ave.

Total Quantity for JB 303 = 83

CON EDISON JOINT BIDDING SCOPE OF WORK
SUPPORT AND PROTECTION
SEQ200531
STORM SEWER EXTENSION
BOROUGH OF QUEENS

JB 330E.2	**SUPPORT & PROTECT ELEC, GAS & STEAM FACILITIES DURING EXCAVATION OF CITY TRENCH WHEN FACILITIES LIE W/IN TRENCH LIMITS (TYPE .2)**	**LF**
	At the following locations:	
	West Sidewalk, Cross Is. Pkwy. W. Serv. Rd., S/O 89th Ave.	
	Total Quantity for JB 330E.2 = 8	
JB 350	**OVERHEAD ACCOMMODATION PROTECTION OF OVERHEAD**	**LS**
	At the following locations:	
	Various	
	AS SHOWN ON CONTRACT DOCUMENTS	
	Total Quantity for JB 350 = 1	
JB 351	**UTILITY POLE SUPPORTS**	**EA**
	At the following locations:	
	Northeast Corner 241 St. and 87th Ave. S/S 87th Ave., I/O 241 St.	
	Total Quantity for JB 351 = 2	
JB 400	**TEST PITS FOR UTILITY FACILITIES**	**CY**
	At the following locations:	
	As Required	
	Total Quantity for JB 400 = 50	
JB 401	**TRENCH EXCAVATION FOR ADJUSTMENT OF UTILITIES**	**CY**
	At the following locations:	
	N/S 88th Dr., W/O Cross Is. Pkwy. W. Serv. Rd.	
	AS ENCOUNTERED AND DIRECTED BY A CON EDISON REPRESENTATIVE	
	Total Quantity for JB 401 = 22	

JB 402.2	EXISTING OCCUPIED NON-CONCRETE ENCASED CONDUITS PLACED IN FINAL POSITION W/O CONCRETE ENCASEMENT	LF

At the following locations:

N/S 88th Dr., W/O Cross Is. Pkwy. W. Serv. Rd.

AS ENCOUNTERED AND DIRECTED BY A CON EDISON REPRESENTATIVE

Total Quantity for JB 402.2 = 40

JB 450.1	CONSTRUCTION FIELD SUPPORT REQUIRING AVERAGE SIZE SURVEY CREW PERFORMING TYPICAL SURVEY FUNCTIONS (TYPE .1)	CRHRS

At the following locations:

As Required

Total Quantity for JB 450.1 = 1

JB 450.2	CONSTRUCTION FIELD SUPPORT REQUIRING AVERAGE SMALL SIZE CREW CAPABLE OF PERFORMING VARIOUS TASKS (TYPE .2)	CRHRS

At the following locations:

As Required

Total Quantity for JB 450.2 = 20

JB 450.3	CONSTRUCTION FIELD SUPPORT REQUIRING AVERAGE MEDIUM SIZE CREW CAPABLE OF PERFORMING VARIOUS TASKS (TYPE .3)	CRHRS

At the following locations:

As Required

Total Quantity for JB 450.3 = 28

CON EDISON JOINT BIDDING SCOPE OF WORK
SUPPORT AND PROTECTION
SEQ200531
STORM SEWER EXTENSION
BOROUGH OF QUEENS

JB 500 **REMOVAL OF ABANDONED UTILITY CONDUITS (NON-CONCRETE ENCASED)** **LF**

At the following locations:

S/S 89th Ave., W/O Cross Is. Pkwy. W. Serv. Rd.
N/S 88th Dr., W/O Cross Is. Pkwy. W. Serv. Rd.
S/S 88th Rd., W/O Cross Is. Pkwy. W. Serv. Rd.
W/S Cross Is. Pkwy. W. Serv. Rd., B/W 88th Rd. and 88th Ave.
W/S Cross Is. Pkwy. W. Serv. Rd., B/W 88th Ave. and 87th Ave.
S/S 87th Ave., B/W 241 St. and Cross Is. Pkwy. W. Serv. Rd.
S/S 87th Ave., B/W 239th St. and 241 St.
AS ENCOUNTERED AND DIRECTED BY A CON EDISON REPRESENTATIVE

Total Quantity for JB 500 = 2,564

JB 501 **REMOVAL OF ABANDONED MASONRY FOR ELEC. AND TEL. FACILITIES** **CY**

At the following locations:

S/S 87th Ave., Opposite Hse. 241-41
S/S 87th Ave., B/W 239th St. and 241 St.
AS ENCOUNTERED AND DIRECTED BY A CON EDISON REPRESENTATIVE

Total Quantity for JB 501 = 12

JB 636 ED **ADJUSTMENT OF UTILITY HARDWARE (30" TO UNDER 34" WIDTH)** **EA**

At the following locations:

Southwest Corner Cross Is. Pkwy. W. Serv. Rd. and 88th Ave.
W/S Cross Is. Pkwy. W. Serv. Rd., B/W 88th Ave. and 87th Ave.
Southwest Corner Cross Is. Pkwy. W. Serv. Rd. and 87th Ave.
AS ENCOUNTERED AND DIRECTED BY A CON EDISON REPRESENTATIVE

Total Quantity for JB 636 ED = 3

CON EDISON JOINT BIDDING SCOPE OF WORK
SUPPORT AND PROTECTION
SEQ200531
STORM SEWER EXTENSION
BOROUGH OF QUEENS

JB 636 MD — **MODIFICATION OF WORK METHODS TO ACCOMMODATE UTILITY HARDWARE (30" TO UNDER 34" WIDTH)** — **EA**

At the following locations:

Southwest Corner Cross Is. Pkwy. W. Serv. Rd. and 89th Ave.
W/S Cross Is. Pkwy. W. Serv. Rd., B/W 89th Ave. and 88th Dr.
Northwest Corner Cross Is. Pkwy. W. Serv. Rd. and 88th Dr.
W/S Cross Is. Pkwy. W. Serv. Rd., B/W 88th Dr. and 88th Rd.
Southwest Corner Cross Is. Pkwy. W. Serv. Rd. and 88th Rd.
W/S Cross Is. Pkwy. W. Serv. Rd., B/W 88th Rd. and 88th Ave.

AS ENCOUNTERED AND DIRECTED BY A CON EDISON REPRESENTATIVE

Total Quantity for JB 636 MD = 6

JB 700 — **SPECIAL MODIFICATION OF WORK METHODS TO ACCOMMODATE/PROTECT UNDERGROUND FACILITIES WITH LIMITED COVER** — **CY**

At the following locations:

W/S Cross Is. Pkwy. W. Serv. Rd., N/O 88th Ave.

AS SHOWN ON CONTRACT DRAWINGS AND DIRECTED BY A CON EDISON REP.

Total Quantity for JB 700 = 127

JB 710.1 — **REMOVAL OF ABANDONED UTILITY STEEL/CAST IRON/PLASTIC, UP TO AND INCL. 12" DIAMETER PIPES** — **LF**

At the following locations:

S/S 87th Ave., B/W 239th St. and 241 St.

Total Quantity for JB 710.1 = 138

JB 802A — **SPECIAL CARE EXCAVATION AND RESTORATION FOR SIDEWALK WORK** — **SF**

At the following locations:

As Required

AS ENCOUNTERED AND DIRECTED BY A CON EDISON REPRESENTATIVE

Total Quantity for JB 802A = 50

CON EDISON JOINT BIDDING SCOPE OF WORK
SUPPORT AND PROTECTION
SEQ200531
STORM SEWER EXTENSION
BOROUGH OF QUEENS

JB 802B **SPECIAL CARE EXCAVATION AND RESTORATION FOR CURB WORK** **LF**

At the following locations:

As Required

AS ENCOUNTERED AND DIRECTED BY A CON EDISON REPRESENTATIVE

Total Quantity for JB 802B = 10

JB 900 **EXTRA UTILITY WORK COSTS ALLOWANCE** **FS**

At the following locations:

As Required

AS ENCOUNTERED AND DIRECTED BY A CON EDISON REPRESENTATIVE

Total Quantity for JB 900 = 1

JOINT BID WORKSHEET

SEQ-200531

INSTALLATION OF STORM SEWERS & DISTRIBUTION WATER MAINS IN CROSS ISLAND PARKWAY WEST SERVICE ROAD; ETC.

ENGINEER'S ESTIMATE OF QUANTITY AND TYPES OF INTERFERENCE

FOR VERIZON

IN THE BOROUGH OF QUEENS

JOINT BID ITEM NUMBER	DESCRIPTION	Unit of Measure	Estimated Quantity
JB 104.2	UTILITIES CROSSING TRENCH FOR SEWERS OVER 48" TO 54" DIAMETER (TYPE .2)	EA.	1.00
JB 108.2	UTILITIES CROSSING TRENCH FOR WATERMAIN OVER 12" AND UP TO 24" DIAMETER (TYPE .2)	EA.	1.00
JB 225	INSTALLATION AND REMOVAL OF CATCH BASINS WITH UTILITY INTERFERENCES	EA.	2.00
JB 300	SPECIAL CARE EXCAVATION & BACKFILLING	C.Y.	10.00
JB 350T	OVERHEAD ACCOMMODATION PROTECTION OF OVERHEAD FACILITIES, POLES & APPURTENANCES	L.S.	1.00
JB 400	TEST PITS FOR UTILITY FACILITIES	C.Y.	5.00
JB 401	TRENCH EXCAVATION FOR ADJUSTMENT OF UTILITY FACILITIES	C.Y.	22.00
JB 402T.2A	EXISTING NON-CONCRETE ENCASED NON-STEEL/IRON CONDUITS PLACED IN FINAL POSITION WITH CONCRETE ENCASEMENT	L.F.	34.00
JB 402T.V2A	EXISTING VACANT NON-CONCRETE ENCASED CONDUITS PLACED IN FINAL POSITION WITH CONCRETE ENCASEMENT	L.F.	170.00
JB 636 EE	ADJUSTMENT OF UTILITY HARWARE (34" TO UNDER 41" WIDTH)	EA.	1.00
JB 900	EXTRA UTILITY WORK ALLOWANCE	F.S.	1.00

VERIZON JB SCOPE OF WORK
SUPPORT & PROTECTION
SEQ-200531
INSTALLATION OF STORM SEWERS & DISTRIBUTION WATER MAINS IN CROSS ISLAND PARKWAY WEST SERVICE ROAD; ETC.
IN THE BOROUGH OF QUEENS

JB 104.2	**UTILITIES CROSSING TRENCH FOR SEWERS OVER 48" TO 54" DIAMETER (TYPE .2)**	**EA.**
	At the following locations:	
	NORTH SIDE OF THE INTERSECTION OF CROSS ISLAND PARKWAY WEST SERVICE ROAD AND 88TH AVENUE	1.00
	Total quantity for JB 104.2 = 1.00	
JB 108.2	**UTILITIES CROSSING TRENCH FOR WATERMAIN UP TO AND INCL. 12" DIAMETER (TYPE .2)**	**EA.**
	At the following locations:	
	NORTH SIDE OF THE INTERSECTION OF CROSS ISLAND PARKWAY WEST SERVICE ROAD AND 88TH AVENUE	1.00
	Total quantity for JB 108.2 = 1.00	
JB 225	**INSTALLATION AND REMOVAL OF CATCH BASINS WITH UTILITY INTERFERENCES**	**EA.**
	At the following locations:	
	AS ENCOUNTERED OR DIRECTED BY VERIZON FIELD REPRESENTATIVE	2.00
	Total quantity for JB 225 = 2.00	
JB 300	**SPECIAL CARE EXCAVATION & BACKFILLING**	**C.Y.**
	At the following locations:	
	AS ENCOUNTERED OR DIRECTED BY VERIZON FIELD REPRESENTATIVE	10.00
	Total quantity for JB 300 = 10.00	
JB 350T	**OVERHEAD ACCOMMODATION PROTECTION OF OVERHEAD FACILITIES, POLES & APPURTENANCES**	**L.S.**
	At the following locations:	
	AS ENCOUNTERED OR DIRECTED BY VERIZON FIELD REPRESENTATIVE	1.00
	Total quantity for JB 350T = 1.00	

VERIZON JB SCOPE OF WORK
SUPPORT & PROTECTION
SEQ-200531
INSTALLATION OF STORM SEWERS & DISTRIBUTION WATER MAINS IN CROSS ISLAND PARKWAY WEST SERVICE ROAD; ETC.
IN THE BOROUGH OF QUEENS

JB 400	**TEST PITS FOR UTILITY FACILITIES**	**C.Y.**
	At the following locations:	
	AS ENCOUNTERED OR DIRECTED BY VERIZON FIELD REPRESENTATIVE	5.00
	Total quantity for JB 400 = 5.00	
JB 401	**TRENCH EXCAVATION FOR ADJUSTMENT OF UTILITY FACILITIES**	**C.Y.**
	At the following locations:	
	NORTH SIDE OF THE INTERSECTION OF CROSS ISLAND PARKWAY WEST SERVICE ROAD AND 88TH AVENUE	22.00
	Total quantity for JB 401 = 22.00	
JB 402T.2A	**EXISTING NON-CONCRETE ENCASED NON-STEEL/IRON CONDUITS PLACED IN FINAL POSITION WITH CONCRETE ENCASEMENT**	**L.F.**
	At the following locations:	
	NORTH OF THE INTERSECTION OF CROSS ISLAND PARKWAY WEST SERVICE ROAD AND 88TH AVENUE	34.00
	Total quantity for JB 402T.2A = 34.00	
JB 402T.V2A	**EXISTING VACANT NON-CONCRETE ENCASED CONDUITS PLACED IN FINAL POSITION WITH CONCRETE ENCASEMENT**	**L.F.**
	At the following locations:	
	NORTH OF THE INTERSECTION OF CROSS ISLAND PARKWAY WEST SERVICE ROAD AND 88TH AVENUE	170.00
	Total quantity for JB 402T.V2A = 170.00	
JB 636 EE	**ADJUSTMENT OF UTILITY HARWARE (34" TO UNDER 41" WIDTH)**	**EA.**
	At the following locations:	
	NORTH OF THE INTERSECTION OF CROSS ISLAND PARKWAY WEST SERVICE ROAD AND 88TH AVENUE	1.00
	Total quantity for JB 636 EE = 1.00	
JB 900	**EXTRA UTILITY WORK ALLOWANCE**	**F.S.**
	At the following locations:	
	AS ENCOUNTERED OR DIRECTED BY VERIZON FIELD REPRESENTATIVE	1.00
	Total quantity for JB 900 = 1.00	

FOR INFORMATION ONLY
ENGINEER'S ESTIMATE OF QUANTITIES AND TYPES OF INTERFERENCE
Charter Spectrum
SEQ200531
Installation of Storm Sewers & Distribution Water Mains in Cross Island Parkway
West Service Road, etc.
Borough of Queens

JB ITEM	DESCRIPTION	UNITS	ESTIMATED QUANTITY
350TWC	OVERHEAD ACCOMMODATION, PROTECTION OF OVERHEAD FACILITIES, POLES & APPURTENANCES	LS	1
900	EXTRA UTILITY WORK COSTS ALLOWANCE	FS	1

Charter Spectrum
SUPPORT & PROTECTION
[illegible]
Installation of Storm Sewers & Distribution Water Mains in Cross Island Parkway
West Service Road, etc.
Borough of Queens

JB 950TWC	OVERHEAD ACCOMMODATION, PROTECTION OF OVERHEAD FACILITIES, POLES & APPURTENANCES At the following locations: AS ENCOUNTERED		LS
			1
		Total quantity for JB 950TWC	1
JB 900	EXTRA UTILITY WORK COSTS ALLOWANCE		FS
		Total quantity for JB 900	1

JB-39

TEST PITS

(1) THESE TEST PITS DETAIL EXISTING CONDITIONS (AS OF BID DATE) OF UTILITIES AND OTHER SUBSURFACE FACILITIES AT LOCATIONS AS SHOWN ON THE TEST PIT LOCATIONS PLAN OF THE CONTRACT DRAWINGS.

(2) DEPTHS OF FACILITIES ARE FROM EXISTING ROADWAY AND SIDEWALK ELEVATIONS AS SHOWN, OFFSETS ARE FROM EXISTING CURB, PROPERTY AND BUILDING LINES, AS SHOWN.

(3) RELEVANT ITEMS ARE NOTED ON EACH TEST PIT DIAGRAM.

(NO TEXT IN THIS SECTION)

conEdison

JOB NO: SEQ200531

TEST PIT # 07

PREPARED BY: P. INES

DATE: 05/24/17

CHECKED BY: P. TRUONG

DATE: 05/24/17

JOB NAME: CONSTRUCTION OF SEWER AND WATER MAIN

LOCATION: W/S CROSS IS. PKWY. W. SERV. RD. 20' S/O 88TH AVENUE

PURPOSE: FOR TYPE 3 CB REQUEST

DATE OF EXCAVATION: 05/1/17

CONTRACT SHEET NO: ____ OF ____

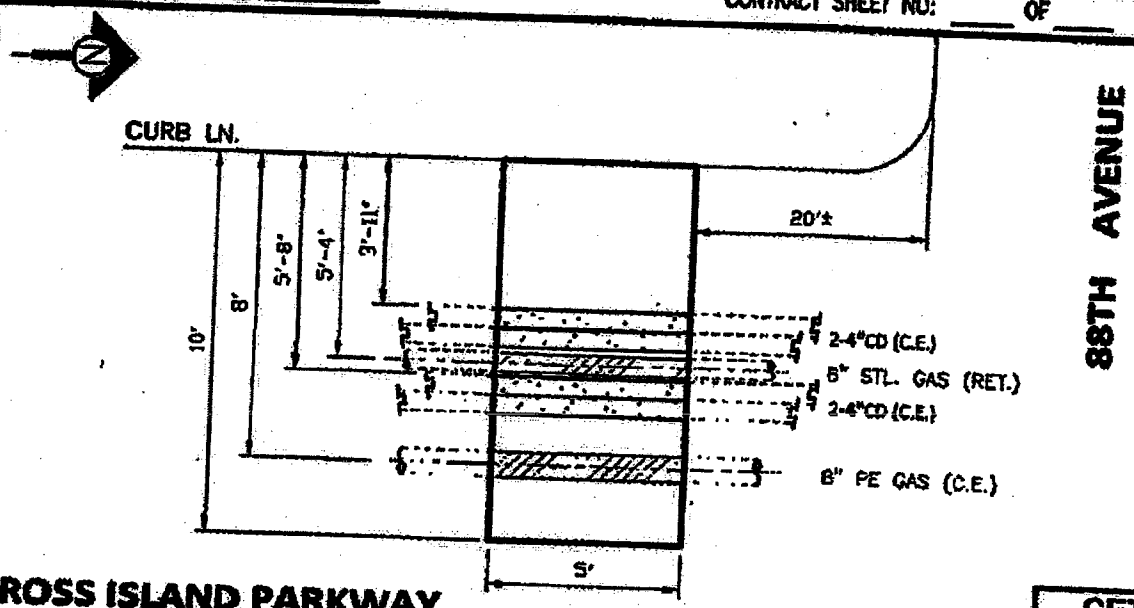

CROSS ISLAND PARKWAY
WEST SERVICE ROAD

PLAN
N.T.S

CET

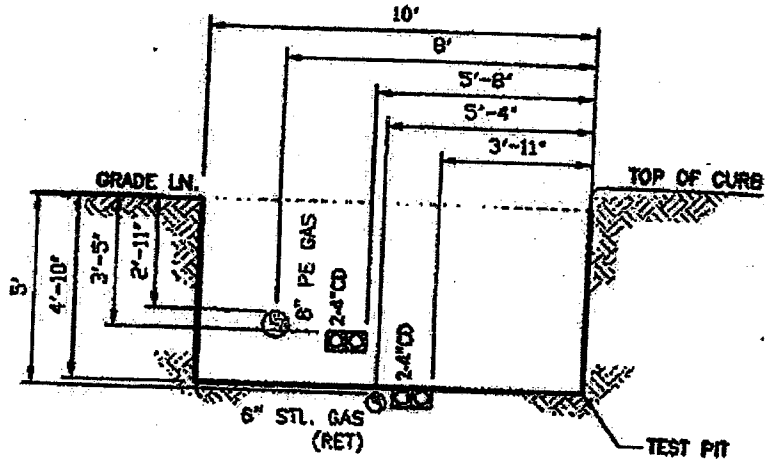

PROFILE – LOOKING SOUTH
N.T.S.

JB-41

conEdison

JOB NO: SEQ200531 TEST PIT # 08

PREPARED BY: P. INES DATE: 05/24/17

CHECKED BY: P. TRUONG DATE: 05/24/17

JOB NAME: CONSTRUCTION OF SEWER AND WATER MAIN LOCATION: W/S CROSS IS. PKWY. W. SERV. RD. 20' N/O 88TH AVENUE

PURPOSE: FOR TYPE 3 CB REQUEST

DATE OF EXCAVATION: 04/25/17 CONTRACT SHEET NO: ____ OF ____

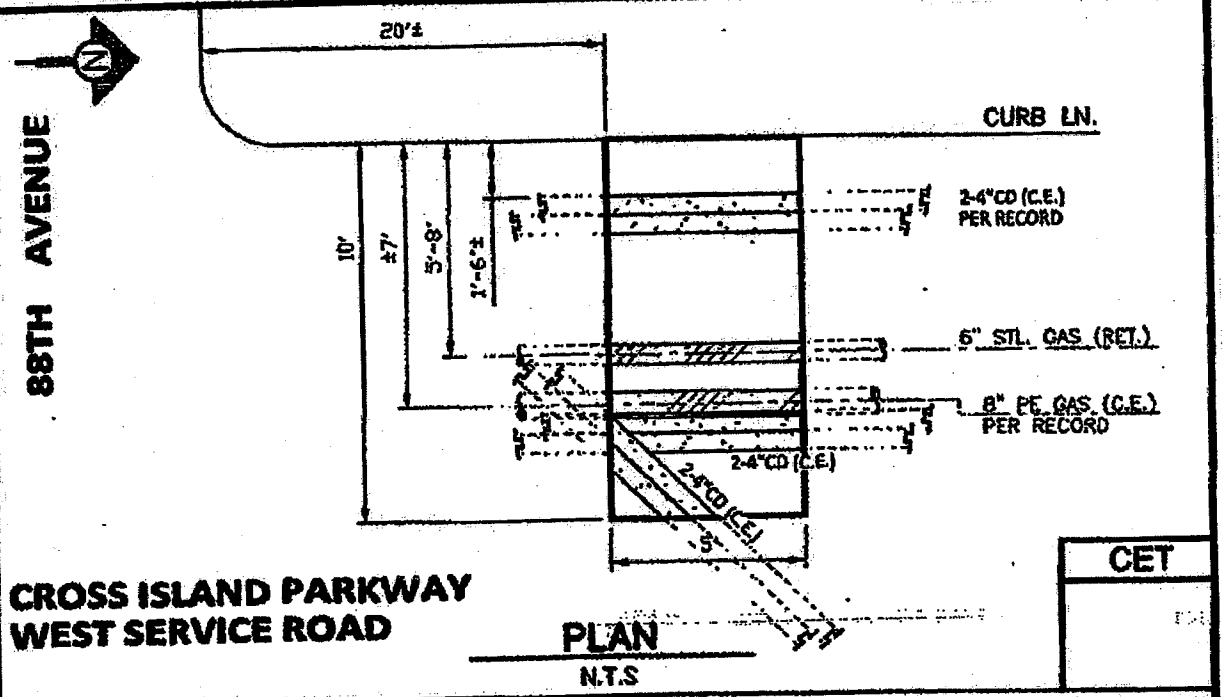

PLAN

N.T.S

CET

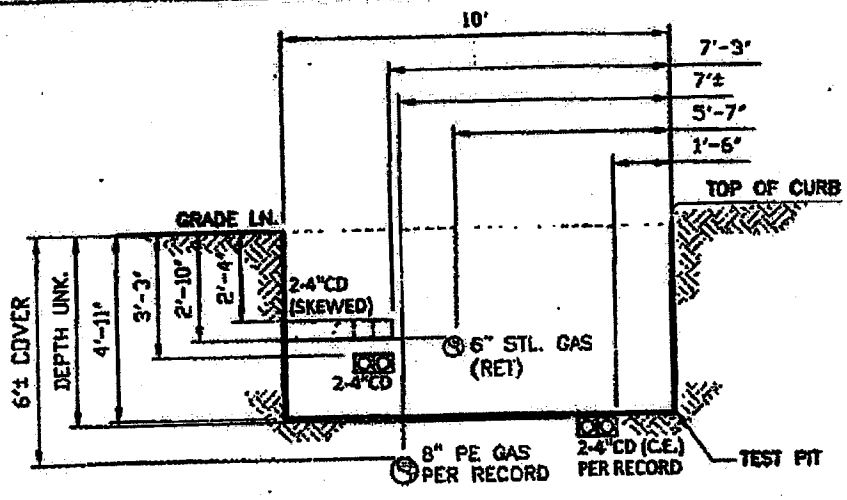

PROFILE – LOOKING SOUTH

N.T.S.

JB-42

verizon	JOB NO.: SEQ 200531	TEST PIT #: 1
	JOB: WATER MAIN WORK	TP DATE: 05/04/2017
	239TH STREET, BOROUGH OF QUEENS	INSPECTOR: W.I.

LOCATION: E/S. OF CROSS ISLAND PKWY SERVICE RD AND NE CORNER OF 88TH AVE

PURPOSE: LOCATE EXISTING UNDERGROUND TELEPHONE FACILITIES

DIMENSION: 6'-1"x4'-0"x3'-10" VOLUME: 3.45 C.Y. SHEET NO. 1 OF 1

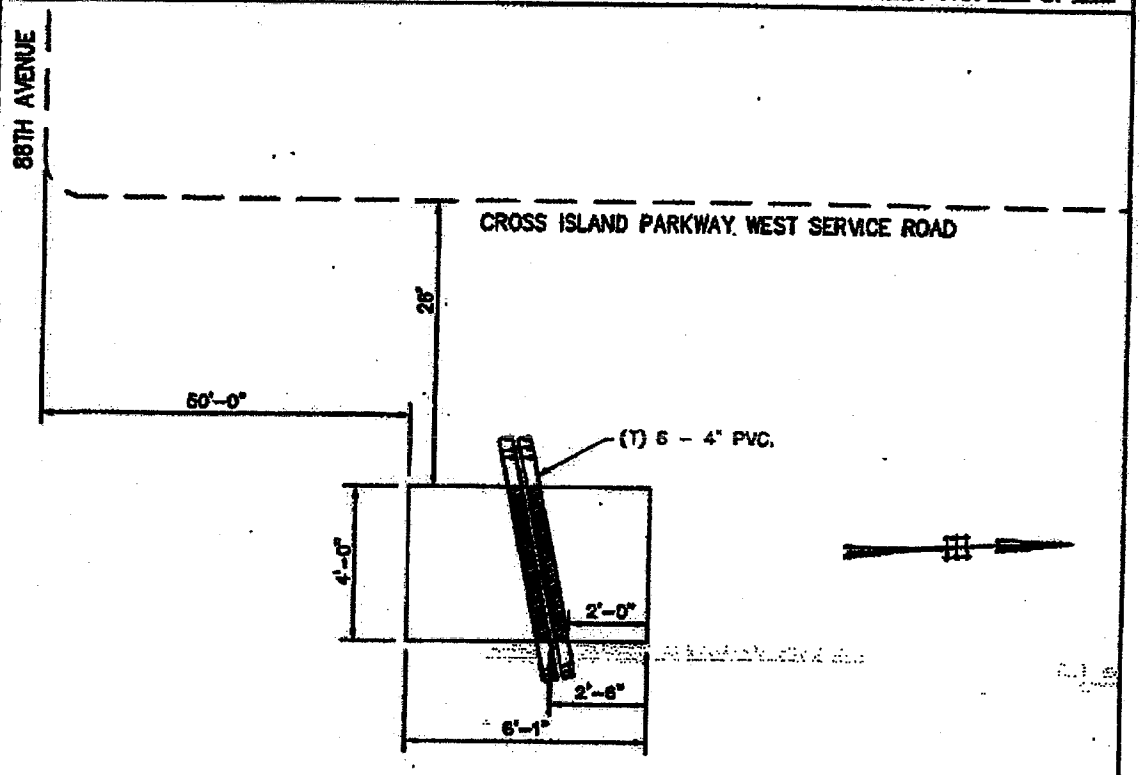

NOTE:
1. ALL DRAWINGS SHOWING UTILITY SUPPORT AND PROTECT WORK ARE FOR REFERENCE ONLY.

PLAN

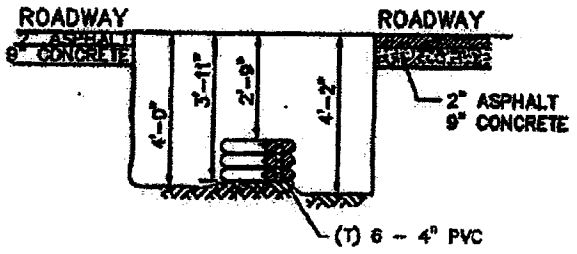

SECTION LOOKING WEST

JB-43

END OF JB-PAGES

THE JB-PAGES CONSIST OF FORTY-SIX (46) PAGES AND
FIFTEEN (15) SHEETS OF PRIVATE UTILITY DRAWINGS ARE ATTACHED TO
THE CONTRACT PLANS

Department of Design and Construction

INFRASTRUCTURE DIVISION
BUREAU OF DESIGN

VOLUME 1 OF 3

PROJECT ID: SEQ200531

FOR STORM SEWER EXTENSIONS

IN 239TH STREET BETWEEN 87TH AVENUE AND 88TH AVENUE
IN 87TH AVENUE BETWEEN CROSS ISLAND PARKWAY AND 239TH STREET
IN CROSS ISLAND PARKWAY WEST SERVICE ROAD BETWEEN 90TH AVENUE AND 87TH AVENUE

CAPITAL PROJECT WM-1

FOR WATER MAIN WORK

IN 239TH STREET BETWEEN 87TH AVENUE AND 88TH AVENUE
IN 87TH AVENUE BETWEEN CROSS ISLAND PARKWAY AND 239TH STREET
IN CROSS ISLAND PARKWAY WEST SERVICE ROAD BETWEEN 90TH AVENUE AND 87TH AVENUE

Together With All Work Incidental Thereto
BOROUGH OF QUEENS
CITY OF NEW YORK

_____
Contractor

_____

Dated_____, 20___

_____

Department of Design and Construction

THE CITY OF NEW YORK
DEPARTMENT OF DESIGN AND CONSTRUCTION
DIVISION OF INFRASTRUCTURE

30-30 THOMSON AVENUE
LONG ISLAND CITY, NEW YORK 11101-3045
TELEPHONE (718) 391-1000
WEBSITE www.nyc.gov/buildnyc

VOLUME 2 OF 3

INFORMATION FOR BIDDERS
CONTRACT
PERFORMANCE AND PAYMENT BONDS
PREVAILING WAGE SCHEDULE

FOR FURNISHING ALL LABOR AND MATERIALS NECESSARY AND REQUIRED FOR:

PROJECT ID: SEQ200531

STORM SEWER EXTENSIONS

IN 239TH STREET BETWEEN 87TH AVENUE AND 88TH AVENUE
IN 87TH AVENUE BETWEEN CROSS ISLAND PARKWAY AND 239TH STREET
IN CROSS ISLAND PARKWAY WEST SERVICE ROAD BETWEEN 90TH AVENUE AND 87TH AVENUE

CAPITAL PROJECT WM-1

WATER MAIN WORK

IN 239TH STREET BETWEEN 87TH AVENUE AND 88TH AVENUE
IN 87TH AVENUE BETWEEN CROSS ISLAND PARKWAY AND 239TH STREET
IN CROSS ISLAND PARKWAY WEST SERVICE ROAD BETWEEN 90TH AVENUE AND 87TH AVENUE

Together With All Work Incidental Thereto
BOROUGH OF QUEENS
CITY OF NEW YORK

FOR THE DEPARTMENT OF ENVIRONMENTAL PROTECTION
PREPARED BY
IN-HOUSE DESIGN

November 6, 2017

8-039

Department of Design and Construction

THE CITY OF NEW YORK
DEPARTMENT OF DESIGN AND CONSTRUCTION
DIVISION OF INFRASTRUCTURE

30-30 THOMSON AVENUE
LONG ISLAND CITY, NEW YORK 11101-3045
TELEPHONE (718) 391-1000
WEBSITE www1.nyc.gov/site/ddc/index.page

VOLUME 2 OF 3

INFORMATION FOR BIDDERS
CONTRACT
PERFORMANCE AND PAYMENT BONDS
PREVAILING WAGE SCHEDULE

FOR FURNISHING ALL LABOR AND MATERIALS NECESSARY AND REQUIRED FOR:

FOR THE DEPARTMENT OF ENVIRONMENTAL PROTECTION
PREPARED BY
IN-HOUSE DESIGN

NOVEMBER 6, 2017

CITY OF NEW YORK

DEPARTMENT OF
DESIGN AND CONSTRUCTION
DIVISION OF INFRASTRUCTURES

INFORMATION FOR BIDDERS

JUNE 2015

(NO TEXT ON THIS PAGE)

CITY OF NEW YORK CITY
DEPARTMENT OF DESIGN AND CONSTRUCTION
INFORMATION FOR BIDDERS

TABLE OF CONTENTS

SECTION 1.	DESCRIPTION AND LOCATION OF WORK	1
SECTION 2.	TIME AND PLACE FOR RECEIPT OF BIDS	1
SECTION 3.	DEFINITIONS	1
SECTION 4.	INVITATION FOR BIDS AND CONTRACT DOCUMENTS	1
SECTION 5.	PRE-BID CONFERENCE	2
SECTION 6.	AGENCY CONTACT	2
SECTION 7.	BIDDER'S OATH	2
SECTION 8.	EXAMINATION AND VIEWING OF SITE, CONSIDERATION OF OTHER SOURCES OF INFORMATION AND CHANGED CONDITIONS	2
SECTION 9.	EXAMINATION OF PROPOSED CONTRACT	3
SECTION 10.	FORM OF BID	3
SECTION 11.	IRREVOCABILITY OF BID	3
SECTION 12.	ACKNOWLEDGMENT OF AMENDMENTS	4
SECTION 13.	BID SAMPLES AND DESCRIPTIVE LITERATURE	4
SECTION 14.	PROPRIETARY INFORMATION/TRADE SECRETS	4
SECTION 15.	PRE-OPENING MODIFICATION OR WITHDRAWAL OF BIDS	4
SECTION 16.	BID EVALUATION AND AWARD	4
SECTION 17.	LATE BIDS, LATE WITHDRAWALS AND LATE MODIFICATIONS	5
SECTION 18.	WITHDRAWAL OF BIDS.	5
SECTION 19.	MISTAKE IN BIDS	5
SECTION 20.	LOW TIE BIDS	6
SECTION 21.	REJECTION OF BIDS	6
SECTION 22.	RIGHT TO APPEAL DETERMINATIONS OF NON-RESPONSIVENESS OR NON-RESPONSIBILITY AND RIGHT TO PROTEST SOLICITATIONS AND AWARD	7
SECTION 23.	AFFIRMATIVE ACTION AND EQUAL EMPLOYMENT OPPORTUNITY	7
SECTION 24.	VENDEX QUESTIONNAIRES	7
SECTION 25.	COMPLAINTS ABOUT THE BID PROCESS	8
SECTION 26.	BID, PERFORMANCE AND PAYMENT SECURITY	8
SECTION 27.	FAILURE TO EXECUTE CONTRACT	9
SECTION 28.	BIDDER RESPONSIBILITIES AND QUALIFICATIONS	9
SECTION 29.	EMPLOYMENT REPORT	10
SECTION 30.	LABOR LAW REQUIREMENTS	10
SECTION 31.	INSURANCE	10
SECTION 32.	LUMP SUM CONTRACTS	11
SECTION 33.	UNIT PRICE CONTRACTS	11
SECTION 34.	EXCISE TAX	11
SECTION 35.	LICENSES AND PERMITS	11
SECTION 36.	MULTIPLE PRIME CONTRACTORS	11
SECTION 37.	LOCALLY BASED ENTERPRISE REQUIREMENTS (LBE)	12
SECTION 38.	BID SUBMISSION REQUIREMENTS	13
SECTION 39.	COMPTROLLER'SCERTIFICATE	14
SECTION 40.	PROCUREMENT POLICY BOARD RULES	14
SECTION 41.	DDC SAFETY REQUIREMENTS	14

(NO TEXT ON THIS PAGE)

INFORMATION FOR BIDDERS

1. Description and Location of Work

The description and location of the work for which bids are requested are specified in Attachment 1, "Bid Information". Attachment 1 is included as page A-1 of the Bid Booklet.

2. Time and Place for Receipt of Bids

Sealed bids shall be received on or before the date and hour specified in Attachment 1, at which time they will be publicly opened and read aloud in the presence of the Commissioner or his or her representative, and any bidders who may desire to be present.

3. Definitions

The definitions set forth in the Procurement Policy Board Rules shall apply to this Invitation For Bids.

4. Invitation For Bids and Contract Documents

(A) Except for titles, sub-titles, headings, running headlines, tables of contents and indices (all of which are printed herein merely for convenience) the following, except for such portions thereof as may be specifically excluded, shall be deemed to be part of the Contract and the Invitation for Bids.

(1) All provisions required by law to be inserted in this Contract, whether actually inserted or not
(2) The Contract Drawings and Specifications
(3) The General Conditions, the General Requirements and the Special Conditions, if any
(4) The Contract
(5) The Information for Bidders; Request for Proposals; Notice of Solicitation and Proposal For Bids; Bid or Proposal, and, if used, the Bid Booklet
(6) The Budget Director's Certificate; all Addenda issued prior to the receipt of the bids; the Notice of Award; Performance and Payment Bonds, if required; and the Notice to Proceed with the Work.

(B) For particulars as to this procurement, including quantity and quality of the purchase, extent of the work or labor to be performed, delivery and performance schedule, and any other special instructions, prospective bidders are referred to the Invitation For Bids Documents. A copy of such documents can be obtained at the location set forth in Attachment 1.

(C) Deposit for Copy of Invitation For Bids Documents: Prospective bidders may obtain a copy of the Invitation For Bids Documents by complying with the conditions set forth in the Notice of Solicitation. The deposit must be in the form of a check or money order made payable to the City of New York, and drawn upon a state or national bank or trust company, or a check of such bank or trust company signed by a duly authorized officer thereof.

(D) Return of Invitation For Bids Documents: All Invitation For Bids Documents must be returned to the Department upon request. If the bidder elects not to submit a bid thereunder, the

Invitation For Bids Documents shall be returned to the Department, along with a statement that no bid will be submitted.

(E) Return of Deposit: Such deposit will be returned within 30 days after the award of the contract or the rejection of all bids as set forth in the advertisement, provided the Invitation For Bids Documents are returned to the location specified in Attachment 1, in physical condition satisfactory to the Commissioner.

(F) Additional Copies: Additional copies of the Invitation For Bids Documents may be obtained, subject to the conditions set forth in the advertisement for bids.

5. Pre-Bid Conference

A pre-bid conference shall be held as set forth in Attachment 1. Nothing stated at the pre-bid conference shall change the terms or conditions of the Invitation For Bids Documents, unless a change is made by written amendment as provided in Section 9 below. Failure to attend a mandatory pre-bid conference shall constitute grounds for the rejection of the bid.

6. Agency Contact

Any questions or correspondence relating to this bid solicitation shall be addressed to the Agency Contact person specified in Attachment 1.

7. Bidder's Oath

(A) The bid-shall be properly signed by an authorized representative of the bidder and the bid shall be verified by the written oath of the authorized representative who signed the bid, that the several matters stated and information furnished therein are in all aspects true.

(B) A materially false statement willfully or fraudulently made in connection with the bid or any of the forms completed and submitted with the bid may result in the termination of any Contract between the City and the Bidder. As a result, the Bidder may be barred from participating in future City contracts as well as be subject to possible criminal prosecution.

8. Examination and Viewing of Site

(A) Pre-Bidding (Investigation) Viewing of Site -Bidders must carefully view and examine the site of the proposed work, as well as its adjacent area, and seek other usual sources of information, for they will be conclusively presumed to have full knowledge of any and all conditions on, about or above the site relating to or affecting in any way the performance of the work to be done under the Contract which were or should have been indicated to a reasonably prudent bidder. To arrange a date for visiting the work site, bidders are to contact the Agency Contact person specified in Attachment 1.

(B) Should the contractor encounter during the progress of the work subsurface conditions at the site materially differing from any shown on the Contract Drawings or indicated in the Specifications or such subsurface conditions as could not reasonably have been anticipated by the contractor and were not anticipated by the City, which conditions will materially affect the cost of the work to be done under the

Contract, the attention of the Commissioner must be called immediately to such conditions before they are disturbed. The Commissioner shall thereupon promptly investigate the conditions. If he finds that they do so materially differ, or that they could not have been reasonably anticipated by the contractor and were not anticipated by the City, the Contract may be modified with his written approval.

9. Examination of Proposed Contract

(A) Request for Interpretation or Correction: Prospective bidders must examine the Contract Documents carefully and before bidding must request the Commissioner in writing for an interpretation or correction of every patent ambiguity, inconsistency or error therein which should have been discovered by a reasonably prudent bidder. Such interpretation or correction, as well as any additional contract provisions the Commissioner may decide to include, will be issued in writing by the Commissioner as an addendum to the Contract, which will be transmitted to each person recorded as having received a copy of the Contract Documents from the Department. Transmission of such addendum will be by mail, e-mail, facsimile or hand delivery. Such addendum will also be posted at the place where the Contract Documents are available for the inspection of prospective bidders. Upon transmission as provided for herein, such addendum shall become a part of the Contract Documents, and binding on all bidders, whether or not actual notice of such addendum is shown.

(B) Only Commissioner's Interpretation or Correction Binding: Only the written interpretation or correction so given by the Commissioner shall be binding, and prospective bidders are warned that no other officer, agent or employee of the City is authorized to give information concerning, or to explain or interpret, the Contract.

(C) Documents given to a subcontractor for the purpose of soliciting the subcontractor's bid shall include either a copy of the bid cover sheet or a separate information sheet setting forth the project name, the Contract number (if available), the contracting agency and the Project's location.

10. Form of Bid

Each bid must be submitted upon the prescribed form and must contain: a) the name, residence and place of business of the person or persons making the same; b) the names of all persons interested therein, and if no other person is so interested, such fact must be distinctly stated; c) a statement to the effect that it is made without any connection with any other person making a bid for the same purpose and that it is in all respects fair and without collusion or fraud; d) a statement that no Council member or other officer or employee or person whose salary is payable in whole or part from the City Treasury is directly or indirectly interested therein or in the supplies, materials or equipment and work or labor to which it relates, or in any portion of the profits thereof; e) a statement that the bidder is not in arrears to the City or to any agency upon a debt or contract or taxes, and is not a defaulter as surety or otherwise upon any obligation to the City to any agency thereof, except as set forth in the bid.

THE BID SHALL BE TYPEWRITTEN OR WRITTEN LEGIBLY IN INK. THE BID SHALL BE SIGNED IN INK. ERASURES OR ALTERATIONS SHALL BE INITIALED BY THE SIGNER IN INK. FAILURE TO CONFORM TO THE REQUIREMENTS OF THIS SECTION 10 SHALL RESULT IN THE REJECTION OF THE BID.

11. Irrevocability of Bid

The prices set forth in the bid cannot be revoked and shall be effective until the award of the Contract, unless the bid is withdrawn as provided for in Sections 15 and 18 below.

12. Acknowledgment of Amendments

The receipt of any amendment to the Contract Documents shall be acknowledged by the bidder in its bid submission.

13. Bid Samples and Descriptive Literature

Bid samples and descriptive literature shall not be submitted by the bidder, unless expressly requested elsewhere in the Contract or Contract Documents. Any unsolicited bid samples or descriptive literature which are submitted shall not be examined or tested and shall not be deemed to vary any of the provisions of this Contract.

14. Proprietary Information/Trade Secrets

(A) The bidder shall identify those portions of the bid which it deems to be confidential, proprietary information or trade secrets, and provide justification why such materials shall not be disclosed by the City. All such materials shall be clearly indicated by stamping the pages on which such information appears, at the top and bottom thereof with the word "Confidential". Such materials stamped "Confidential" must be easily separable from the non-confidential sections of the bid.

(B) All such materials so indicated shall be reviewed by the Agency and any decision not to honor a request for confidentiality shall be communicated in writing to the bidder. For those bids which are unsuccessful, all such confidential materials shall be returned to the bidder. Prices, makes and model or catalog numbers of the items offered, deliveries, and terms of payment shall be publicly available after bid opening, regardless of any designation of confidentiality made by the bidder.

15. Pre-Opening Modification or Withdrawal of Bids

Bids may be modified or withdrawn by written notice received in the office designated in Attachment 1, before the time and date set for the bid opening. If a bid is withdrawn in accordance with this Section, the bid security, if any, shall be returned to the bidder.

16. Bid Evaluation and Award

In accordance with the New York City Charter, the Procurement Policy Board Rules and the terms and conditions of this Invitation For Bids, this Contract shall be awarded, if at all, to the responsible bidder whose bid meets the requirements and evaluation criteria set forth in the Invitation For Bids, and whose bid price is either the most favorable bid price or, if the Invitation For Bids so states, the most favorable evaluated bid price. A bid may not be evaluated for any requirement or criterion that is not disclosed in the Invitation For Bids.

Restriction: No negotiations with any bidder shall be allowed to take place except under the circumstances and in the manner set forth in Section 21. Nothing in this Section shall be deemed to permit a contract award to a bidder submitting a higher quality item than that designated in the Invitation For Bids, if that bid is not also the most favorable bid.

17. Late Bids, Late Withdrawals and Late Modifications

Any bid received at the place designated in the solicitation after the time and date set for receipt of bids is late and shall not be considered. Any request for withdrawal or modification received at the place designated in the solicitation after the time and date set for receipt of bids is late and shall not be considered. The exception to this provision is that a late modification of a successful bid that makes the bid terms more favorable to the City shall be considered at any time it is received.

18. Withdrawal of Bids.

Except as provided for in Section 15, above, a bidder may not withdraw its bid before the expiration of forty-five (45) days after the date of the opening of bids; thereafter, a bidder may withdraw its bid only in writing and in advance of an actual award. If within sixty (60) days after the execution of the Contract, the Commissioner fails to fix the date for commencement of work by written notice to the bidder, the bidder, at his option, may ask to be relieved of his obligation to perform the work called for by written notice to the Commissioner. If such notice is given to the Commissioner, and the request to withdraw is granted, the bidder waives all claims in connection with this Contract.

19. Mistake in Bids

(A) Mistake Discovered Before Bid Opening: A bidder may correct mistakes discovered before the time and date set for bid opening by withdrawing or correcting the bid as provided in Section 15 above.

(B) Mistakes Discovered Before Award

(1) In accordance with General Municipal Law (Section 103, subdivision 11), where a unilateral error or mistake is discovered in a bid, such bid may be withdrawn upon written approval of the Agency Chief Contracting Officer if the following conditions are met:

(a) The mistake is known or made known to the agency prior to the awarding of the Contract or within 3 days after the opening of the bid, whichever period is shorter; and
(b) The price bid was based upon an error of such magnitude that enforcement would be unconscionable; and
(c) The bid was submitted in good faith and the bidder submits credible evidence that the mistake was a clerical error as opposed to a judgment error; and
(d) The error in the bid is actually due to an unintentional and substantial arithmetic error or an unintentional omission of a substantial quantity of work, labor, material or services made directly in the compilation of the bid, which unintentional arithmetic error or unintentional omission can be clearly shown by objective evidence drawn from inspection of the original work paper, documents, or materials used in the preparation of the bid sought to be withdrawn; and
(e) It is possible to place the agency in the same position as existed prior to the bid.

(2) Unless otherwise required by law, the sole remedy for a bid mistake in accordance with this Article shall be withdrawal of the bid, and the return of the bid bond, or other security, if any, to the bidder. Thereafter, the agency may, in its discretion, award the Contract to the next lowest bidder or rebid the Contract. Any amendment to or reformation of a bid or a Contract to rectify such an error or mistake

therein is strictly prohibited.

(3) If the mistake and the intended correct bid are clearly evident on the face of the bid document, the bid shall be corrected to the intended correct bid and may not be withdrawn. Examples of mistakes that may be corrected are typographical errors, errors in extending unit prices, transposition errors and arithmetical errors.

20. Low Tie Bids

(A) When two or more low responsive bids from responsible bidders are identical in price, meeting all the requirements and criteria set forth in the Invitation For Bids, the Agency Chief Contracting Officer will break the tie in the following manner and order of priority:

(1) Award to a certified New York City small, minority or woman-owned business entity bidder;
(2) Award to a New York City bidder;
(3) Award to a certified New York State small, minority or woman-owned business bidder;
(4) Award to a New York State bidder.

(B) If two or more bidders still remain equally eligible after application of paragraph (A) above, award shall be made by a drawing by lot limited to those bidders. The bidders involved shall be invited to attend the drawing. A witness shall be present to verify the drawing and shall certify the results on the bid tabulation sheet.

21. Rejection of Bids

(A) Rejection of Individual Bids: The Agency may reject a bid if:

(1) The bidder fails to furnish any of the information required pursuant to Section 24 or 28 hereof; or if
(2) The bidder is determined to be not responsible pursuant to the Procurement Policy Board Rules; or if
(3) The bid is determined to be non-responsive pursuant to the Procurement Policy Board Rules; or if
(4) The bid, in the opinion of the Agency Chief Contracting Officer, contains unbalanced bid prices and is thus non-responsive, unless the bidder can show that the prices are not unbalanced for the probable required quantity of items, or if the imbalance is corrected pursuant to Section 15.

(B) Rejection of All Bids: The Agency, upon written approval by the Agency Chief Contracting Officer, may reject all bids and may elect to resolicit bids if in its sole opinion it shall deem it in the best interest of the City so to do.

(C) Rejection of All Bids and Negotiation With All Responsible Bidders: The Agency Head may determine that it is appropriate to cancel the Invitation For Bids after bid opening and before award and to complete the acquisition by negotiation. This determination shall be based on one of the following reasons:

(1) All otherwise acceptable bids received are at unreasonable prices, or only one bid is received and the Agency Chief Contracting Officer cannot determine the reasonableness of the bid price, or no responsive bid has been received from a responsible bidder; or

(2) In the judgment of the Agency Chief Contracting Officer, the bids were not independently arrived at in open competition, were collusive, or were submitted in bad faith.

(D) When the Agency has determined that the Invitation for Bids is to be canceled and that use of negotiation is appropriate to complete the acquisition, the contracting officer may negotiate and award the Contract without issuing a new solicitation, subject to the following conditions:

(1) prior notice of the intention to negotiate and a reasonable opportunity to negotiate have been given by the contracting officer to each responsible bidder that submitted a bid in response to the Invitation for Bids;

(2) the negotiated price is the lowest negotiated price offered by a responsible bidder; and

(3) the negotiated price is lower than the lowest rejected bid price of a responsible bidder that submitted a bid in response to the Invitation for Bids.

22. Right to Appeal Determinations of Non-Responsiveness or Non-Responsibility and Right to Protest Solicitations and Award

The bidder has the right to appeal a determination of non-responsiveness or non-responsibility and has the right to protest a solicitation and award. For further information concerning these rights, the bidder is directed to the Procurement Policy Board Rules.

23. Affirmative Action and Equal Employment Opportunity

This Invitation For Bids is subject to applicable provisions of Federal, State and Local Laws and executive orders requiring affirmative action and equal employment opportunity.

24. VENDEX Questionnaires

(A) Requirement: Pursuant to Administrative Code Section 6-116.2 and the PPB Rules, bidders may be obligated to complete and submit VENDEX Questionnaires. Generally, if this bid is $100,000 or more, or if this bid when added to the sum total of all contracts, concessions and franchises the bidder has received from the City and any subcontracts received from City contractors over the past twelve months, equals or exceeds $100,000, Vendex Questionnaires must be completed. If required, Vendex Questionnaires must be completed and submitted before any award of contract may be made or before approval is given for a proposed subcontractor. Non-compliance with these submission requirements may result in the disqualification of the bid, disapproval of a subcontractor, subsequent withdrawal of approval for the use of an approved subcontractor, or the cancellation of the contract after its award.

(B) Submission: Vendex Questionnaires must be submitted directly to the Mayor's Office of Contract Services, ATTN: Vendex, 253 Broadway, 9th Floor, New York, New York 10007. In addition, the bidder must submit a Confirmation of Vendex Compliance to the agency. A form for this confirmation is set forth in the Bid Booklet.

(C) Obtaining Forms: Vendex Questionnaires, as well as detailed instructions, may be obtained at www.nyc.gov/vendex. The bidder may also obtain Vendex forms and instructions by contacting the

Agency Chief Contracting Office or the contract person for this contract.

25. Complaints About the Bid Process

The New York City Comptroller is charged with the audit of contracts in New York City. Any vendor who believes that there has been unfairness, favoritism or impropriety in the bid process should inform the Comptroller, Office of Contract Administration, One Centre Street, Room 835, New York, New York; telephone number (212)669-2797.

26. Bid, Performance and Payment Security

(A) Bid Security: Each bid must be accompanied by bid security in an amount and type specified in Attachment 1 (page A-1 of the Bid Booklet). The bid security shall assure the City of New York of the adherence of the bidder to its proposal, the execution of the Contract, and the furnishing of Performance and Payment Bonds by the bidder, if required in Attachment 1. Bid security shall be returned to the bidder as follows:

(1) Within ten (10) days after the bid opening, the Comptroller will be notified to return the deposits of all but the three (3) lowest bidders. Within five (5) days after the award, the Comptroller will be notified to return the deposits of the remaining two unsuccessful bidders.
(2) Within five (5) days after the execution of the Contract and acceptance of the Contractor's bonds, the Comptroller will be notified to return the bid security of the successful bidder or, if performance and payment bonds are not required, only after the sum retained under Article 21 of the Contract equals the amount of the bid security.
(3) Where all bids are rejected, the Comptroller will be notified to return the deposit of the three (3) lowest bidders at the time of rejection.

(B) Performance and Payment Security: Performance and Payment Security must be provided in an amount and type specified in Attachment 1 (page A-1 of the Bid Booklet). The performance and payment security shall be delivered by the contractor prior to or at the time of execution of the Contract. If a contractor fails to deliver the required performance and payment security, its bid security shall be enforced, and an award of Contract may be made to the next lowest responsible and responsive bidder, or the contract may be rebid.

(C) Acceptable Types of Security: Acceptable types of security for bids, performance, and payment shall be limited to the following:

(1) a one-time bond in a form satisfactory to the City;
(2) a bank certified check or money order;
(3) obligations of the City of New York; or
(4) other financial instruments as determined by the Office of Construction in consultation with the Comptroller.

Whenever the successful bidder deposits obligations of the City of New York as performance and payment security, the Comptroller may sell and use the proceeds thereof for any purpose for which the principal or surety on such bond would be liable under the terms of the Contract. If the money is deposited with the Comptroller, the successful bidder shall not be entitled to receive interest on such money from the City.

(D) Form of Bonds: Security provided in the form of bonds must be prepared on the form of bonds authorized by the City of New York. Forms for bid, performance, and payment bonds are included in the Invitation for Bids Documents. Such bonds must have as surety thereunder such surety company or companies as are: (I) approved by the City of New York; (2) authorized to do business in the State of New York, and (3) approved by the Department of the Treasury of the United States. Premiums for any required bonds must be included in the base bid.

The bidder is advised that submission of a bid bond where the surety on such bond fails to meet the criteria set forth herein, shall result in the rejection of the bid as non-responsive.

The Department of the Treasury of the United States advises that information concerning approved surety companies may be obtained as follows: (1) from the Government Printing Office at 202-512-1800; (2) through the Internet at http://www.fms.treas.gov/c570/index.html, and (3) through a computerized public bulletin board, which can be accessed by using your computer modem and dialing 202-874-6887.

(E) Power of Attorney: Attorneys in fact who sign bid, performance, or payment bonds must file with each bond a certified copy of their power of attorney to sign said bonds.

27. Failure to Execute Contract

In the event of failure of the successful bidder to execute the Contract and furnish the required security within ten (10) days after notice of the award of the Contract, the deposit of the successful bidder or so much thereof as shall be applicable to the amount of the award made shall be retained by the City, and the successful bidder shall be liable for and hereby agrees to pay on demand the difference between the price bid and the price for which such Contract shall be subsequently awarded, including the cost of any required reletting and less the amount of such deposit. No plea of mistake in such accepted bid shall be available to the bidder for the recovery of the deposit or as a defense to any action based upon such accepted bid. Further, should the bidder's failure to comply with this Section cause any funding agency, body or group (Federal, State, City, Public, Private, etc.) to terminate, cancel or reduce the funding on this project, the bidder in such event shall be liable also to the City for the amount of actual funding withdrawn by such agency on this project, less the amount of the forfeited deposit.

28. Bidder Responsibilities and Qualifications

(A) Bidders must include with their bids all information necessary for a determination of bidder responsibility, as set forth in the Specifications.

(B) The Agency may require any bidder or prospective bidder to furnish all books of account, records, vouchers, statements or other information concerning the bidder's financial status for examination as may be required by the Agency to ascertain the bidder's responsibility and capability to perform the Contract. If required, a bidder must also submit a sworn statement setting forth such information as the Agency may require concerning present and proposed plant and equipment, the personnel and qualifications of his working organizations, prior experience and performance record.

(C) Oral Examination on Qualifications: In addition thereto, and when directed by the Agency, the bidder, or a responsible officer, agent or employee of the bidder, must submit to an oral examination to be conducted by the Agency in relation to his proposed tentative plan and schedule of

operations, and such other matters as the Agency may deem necessary in order to determine the bidder's ability and responsibility to perform the work in accordance with the Contract. Each person so examined must sign and verify a stenographic transcript of such examination noting thereon such corrections as such person may desire to make.

(D) If the bidder fails or refuses to supply any of the documents or information set forth in paragraph (B) hereof or fails to comply with any of the requirements thereof, the Agency may reject the bid.

29. Employment Report

In accordance with Executive Order No. 50 (1980) as modified by Executive Order 108 (1986), the filing of a completed Employment Report (ER) is a requirement of doing business with the City of New York for construction contractors with contracts of $1,000,000 or more and subcontractors with construction subcontracts of $750,000 or more. The required forms and information are included in the Bid Booklet.

30. Labor Law Requirements

(A) General: The successful bidder will be required to comply strictly with all Federal, State and local labor laws and regulations.

(B) New York State Labor Law: This Contract is subject to New York State Labor Law Section 220, which requires that construction workers on the site be paid prevailing wages and supplements. The Contractor is reminded that all wage provisions of this Contract will be enforced strictly and failure to comply will be considered when evaluating performance. Noncompliance may result in the contractor being debarred by the City from future contracts. Complaints filed with the Comptroller may result in decisions which may debar a contractor from bidding contracts with any state governmental entity and other political subdivisions.

(C) Records: The Contractor is expected to submit accurate payroll reports and other required documents and verify attendance and job classifications being utilized in compliance with the law, Contract provisions and agency procedures.

31. Insurance

(A) Bidders are advised that the insurance requirements contained herein are regarded as material terms of the Contract. As required by Article 22 of the Contract, the contractor must effect and maintain with companies licensed and authorized to do business in the State of New York, the types of insurance set forth therein, when required by and in the amounts set forth in Schedule A of the General Conditions. Such required insurance must be provided from the date the contractor is ordered to commence work and up to the date of final acceptance of all required work.

(B) The contractor must, within ten days of receipt of the notice of award, submit the following insurance documentation: (a) original certificate of insurance for general liability in the amount required by Schedule A of the General Conditions, and (b) original certificates of insurance or other proof of coverage for workers' compensation and disability benefits, as required by Section 57 of the New York State Workers' Compensation Law and Section 220 of the Disability Benefits Law.

32. Lump Sum Contracts

(A) Comparison of Bids: Bids on Lump Sum Contracts will be compared on the basis of the lump sum price bid, adjusted for alternate prices bid, if any.

(B) Lump Sum Bids for "General Construction Work" which include excavation shall include all necessary excavation work defined in the Specifications as being included in the lump sum bid. The bidder shall also bid a unit price for the additional cost of excavating material which is defined in the Specifications as excavation for which additional payment will be made. The total estimated additional cost of removing such material will be taken as the quantity set forth in the Engineer's Estimate multiplied by the unit price bid. This total estimated cost of additional excavation shall be added to the lump sum bid for the General Construction Work for the purpose of comparing bids to determine the low bidder.

(C) Variations from Engineer's Estimate: The Engineer's Estimate of the quantity of excavation for which additional payment will be made is approximate only and is given solely to be used as a uniform basis for the comparison of bids and such estimate is not to be considered as part of this contract. The quantities actually required to complete the contract work may be more or less than the quantities in the Engineer's Estimate and, if so, no action for damages or for loss of profits shall accrue to the contractor by reason thereof.

33. Unit Price Contracts

(A) Comparison of Bids: Bids on Unit Price Contracts will be compared on the basis of a total estimated price, arrived at by taking the sum of the estimated quantities of such items, in accordance with the Engineer's Estimate of Quantities set forth in the Bid Schedule, multiplied by the corresponding unit prices, and including any lump sum bids on individual items.

(B) Variations from Engineer's Estimate: Bidders are warned that the Engineer's Estimate of Quantities on the various items of work and materials is approximate only, given solely to be used as a uniform basis for the comparison of bids, and is not be considered part of this contract. The quantities actually required to complete the contract work may be less or more than so estimated, and if so, no action for damages or for loss of profits shall accrue to the contractor by reason thereof.

(C) Overruns: The terms and conditions applicable to overruns of unit price items are set forth in Article 26 of the Contract.

34. Excise Tax

Bidders are referred to the Specifications for information on Federal Excise Tax exemptions.

35. Licenses and Permits

The successful bidder will be required to obtain all necessary licenses and permits necessary to perform the work.

36. Multiple Prime Contractors

If more than one prime contractor will be involved on this project, all contractors are required to examine the Invitation for Bid packages for all other parts of the project.

37. Locally Based Enterprise Requirements (LBE)

This Contract is subject to the requirements of Administrative Code, Section 6-108.1, and the regulations promulgated thereunder. No construction contract will be awarded unless and until these requirements have been complied with in their entirety. The bidder is advised of the provisions set forth below, as well as the provisions with respect to the Locally Based Enterprise Program contained in Article 67 of the Contract. The contractor is advised that:

(A) If any portion of the Contract is subcontracted, not less than ten percent of the total dollar amount of the contract shall be awarded to locally based enterprises ("LBEs"); except, where less than ten percent of the total dollar amount of the Contract is subcontracted, such lesser percentage shall be so awarded.

(B) No contractor shall require performance and payment bonds from LBE subcontractors.

(C) No Contract shall be awarded unless the contractor first identifies in its bid:

(1) the percentage, dollar amount and type of work to be subcontracted; and
(2) the percentage, dollar amount and type of work to be subcontracted to LBEs.

(D) Within ten calendar days after notification of low bid, the apparent low bidder shall submit an "LBE Participation Schedule" to the contracting agency. If such schedule does not identify sufficient LBE subcontractors to meet the requirements of Administrative Code Section 6-108.1, the apparent low bidder shall submit documentation of its good faith efforts to meet such requirements.

(1) The "LBE Participation Schedule" shall include:

(a) the name and address of each LBE that will be given a subcontract,
(b) the percentage, dollar amount and type of work to be subcontracted to the LBE, and
(c) the dates when the LBE subcontract work will commence and end.

(2) The following documents shall be attached to the "LBE Participation Schedule":

(a) verification letters from each subcontractor listed in the "LBE Participation Schedule" stating that the LBE will enter into a formal agreement for work,
(b) certification documents of any proposed LBE subcontractor which is not on the LBE certified list, and
(c) copies of the certification letter of any proposed subcontractor which is an LBE.

(3) Documentation of good faith efforts to achieve the required LBE percentage shall include as appropriate but not limited to the following:

(a) attendance at prebid meetings, when scheduled by the agency, to advise bidders of contract requirements;

(b) advertisement where appropriate in general circulation media, trade association publications and small business media of the specific subcontracts that would be at least equal to the percentage goal for LBE utilization specified by the contractor;

(c) written notification to association of small, minority and women contractors soliciting specific subcontractors;

(d) written notification by certified mail to LBE firms that their interest in the contract is solicited for specific work items and their estimated values;

(e) demonstration of efforts made to select portions of the work for performance by LBE firms in order to increase the likelihood of achieving the stated goal;

(f) documented efforts to negotiate with LBE firms for specific subcontracts, including at a minimum:

(i) The names, address and telephone numbers of LBE firms that are contacted;

(ii) A description of the information provided to LBE firms regarding the plans and specifications for portions of the work to be performed;

(iii) Documentation showing that no reasonable price can be obtained from LBE firms;

(iv) A statement of why agreements with LBE firms were not reached;

(g) a statement of the reason for rejecting any LBE firm which the contractor deemed to be unqualified; and

(h) documentation of efforts made to assist the LBE firms contacted that needed assistance in obtaining required insurance.

(E) Unless otherwise waived by the Commissioner with the approval of the Office of Economic and Financial Opportunity, failure of a proposed contractor to provide the information required by paragraphs (C) and (D) above may render the bid non-responsive and the Contract may not be awarded to the bidder. If the contractor states that it will subcontract a specific portion of the work, but can demonstrate despite good faith efforts it cannot achieve its required LBE percentage for subcontracted work until after award of Contract, the Contract may be awarded, subject to a letter of compliance from the contractor stating that it will comply with Administrative Code Section 6-108.1 and subject to approval by the Commissioner. If the contractor has not met its required LBE percentage prior to award, the contractor shall demonstrate that a good faith effort has been made subsequent to award to obtain LBEs on each subcontract until its meets the required percentage.

(F) When a bidder indicates prior to award that no work will be subcontracted, no work may be subcontracted without the prior written approval of the Commissioner, which shall be granted only if the contractor in good faith seeks LBE subcontractors at least six weeks prior to the start of work.

(G) The contractor may not substitute or change any LBE which was identified prior to award of the contract without the written permission of the Commissioner. The contractor shall make a written application to the Commissioner for permission to make such substitution or change, explaining why the contractor needs to change its LBE subcontractor and how the contractor will meet its LBE subcontracting requirement. Copies of such application must be served on the originally identified LBE by certified mail return receipt requested, as well as the proposed substitute LBE. The Commissioner shall determine whether or not to grant the contractor's request for substitution.

38. <u>Bid Submission Requirements</u>

The following forms, all of which are contained in the Bid Booklet, are to be completed and submitted with the bid:

(1) Bid Schedule and Bid Form, including Affirmation
(2) Bid Security (if required, see Attachment 1 on Page A-1)
(3) M/WBE Subcontactor Utilization Plan (if participation goals have been established)

FAILURE TO SUBMIT ITEMS (1), (2) AND (3)
WILL RESULT IN THE DISQUALIFICATION OF THE BID.

(4) Safety Questionnaire
(5) Construction Employment Report (if bid is $1,000,000 or more)
(6) Contract Certificate (if bid is less than $1,000,000)
(7) Confirmation of Vendex Compliance
(8) Special Experience Requirements (if applicable to this contract)
(9) Apprenticeship Program Questionnaire (if applicable)

FAILURE TO SUBMIT ITEMS (4) THROUGH (9)
MAY RESULT IN THE DISQUALIFICATION OF THE BID.

39. Comptroller's Certificate

This Contract shall not be binding or of any force unless it is registered by the Comptroller in accordance with Section 328 of the City Charter and the Procurement Policy Board Rules. This Contract shall continue in force only after annual appropriation of funds by the City of New York and certification as hereinabove set forth.

40. Procurement Policy Board Rules

This Invitation For Bids is subject to the Rules of the Procurement Policy Board of the City of New York. In the event of a conflict between said Rules and a provision of this Invitation For Bids, the Rules shall take precedence.

41. DDC Safety Requirements

The DDC Safety Requirements apply to the work to be performed pursuant to the Contract. The DDC Safety Requirements are set forth on the following pages.

CITY OF NEW YORK

DEPARTMENT OF DESIGN AND CONSTRUCTION

SAFETY REQUIREMENTS

June 2015

THE DDC SAFETY REQUIREMENTS INCLUDE THE FOLLOWING SECTIONS:

I. POLICY ON SITE SAFETY

II. PURPOSE

III. DEFINITIONS

IV. RESPONSIBILITIES

V. SAFETY QUESTIONNAIRE

VI. SAFETY PROGRAM AND SITE SAFETY PLAN

VII. KICK-OFF/PRE-CONSTRUCTION MEETINGS AND SAFETY REVIEW

VIII. EVALUATION DURING WORK IN PROGRESS

IX. SAFETY PERFORMANCE EVALUATION

I. POLICY ON SITE SAFETY

The City of New York Department of Design and Construction (DDC) is committed to a policy of injury and illness prevention and risk management for construction work that will ensure the safety and health of the workers engaged in the projects and the protection of the general public. Therefore, it is DDC's policy that work carried out by Contractors on DDC jobsites must, at a minimum, comply with applicable federal, state and city laws, rules and regulations, including without limitation:

- U. S. Department of Labor 29 Code of Federal Regulations (CFR) Part 1926 and applicable Sub-parts of Part 1910 – U.S. Occupational Safety and Health Administration (OSHA); New York State Department of Labor Industrial Code Rule 23 – Protection in Construction, Demolition and Excavation;
- New York City Construction Codes, Title 28
- NYC Department of Transportation Title 34 Chapter 2 – Highway Rules
- New York State Department of Labor Industrial Code Rule 16 NYCRR Part 753
- Title 15 of the Rules of the City of New York, Chapter 13 Citywide Construction Dust Mitigation
- Manual on Uniform Traffic Control Devices (MUTCD)
- Title 15 of the Rules of the City of New York, Chapter 28 Citywide Construction Noise Mitigation

II. PURPOSE

The purpose of this policy is to ensure that Contractors perform their work and supervise their employees in accordance with all applicable federal, state and city rules and regulations. Further, Contractors will be expected to minimize or eliminate jobsite and public hazards, through a planning, inspection, auditing and corrective action process. The goal is to control risks so that injuries, illnesses and accidents to contractors' employees, DDC employees and the general public, as well as damage to city-owned and private property, are reduced to the lowest level feasible.

III. DEFINITIONS

Agency Chief Contracting Officer (ACCO): The ACCO shall mean the person delegated authority by the Commissioner to organize and supervise the procurement activity of subordinate Agency staff in conjunction with the CCPO.

Competent Person: As defined by OSHA, an individual who is capable of identifying existing and predictable hazards in the surroundings or working conditions that are unsanitary, hazardous, or dangerous to employees or the general public, and who has authorization to take prompt corrective measures to eliminate them.

Construction Safety Auditor: A representative of the QA&CS Construction Safety Unit who provides inspection and assessment services to enhance health and safety on all DDC construction projects. The activities of the Construction Safety Auditor include performing site surveys, reviewing health and safety plans, reviewing construction permits, and rendering technical advice and assistance to DDC Resident Engineers and Project Managers.

Construction Safety Unit: A part of QA&CS within the Division of Program Management/ Safety & Site Support that assesses contractor safety on DDC jobsites and advises responsible parties of needed corrective actions.

Construction Superintendent: A representative of the contractor responsible for overseeing performance of the required construction work. This individual must engage in sound construction practices, and is responsible to maintain a safe work site. In the case of a project involving the demolition, alteration or new construction of buildings, the Construction Superintendent must be licensed by the NYC Department of Buildings.

Contractor: For purposes of these Safety Requirements, the term "Contractor" shall mean any person or entity that enters into a contract for the performance of construction work on a DDC project. The term "Contractor" shall include any person or entity which enters into any of the following types of contracts: (1) a prime construction contract for a specific project, (2) a prime construction contract using the Job Order Contracting System ("JOCS Contract"), and (3) a subcontract with a CM/Builder ("First Tier Subcontract").

Daily Safety Job Briefing: Daily jobsite safety meetings, giving to all jobsite personnel by contractor, with the purpose of discussing project specific safety procedures for the scheduled construction work.

Director - Quality Assurance and Construction Safety (QA&CS): Responsible for the operations of the QACS Construction Safety Unit and the DDC Site Safety management programs.

Job Hazard Analysis (JHA): A process of identifying the major job steps and any potential site-specific hazards that may be present during construction and establishing the means and methods to eliminate or control those hazards.

Qualified Person: As defined by OSHA, an individual who, by possession of a recognized degree, certificate, license or professional standing, or who by extensive knowledge, training, and experience, has successfully demonstrated his or her ability to solve problems relating to the subject matter, the work, or the project. Qualified Persons are required under regulation to address issues pertaining, but without limit, to fall protection, scaffold design and trenching and shoring, among others.

Project Site: Those areas indicated in the Contract Documents where the Work is to be performed.

Project Safety Representative: The designated project safety representative shall have completed an authorized 30 hour OSHA Construction Safety Course and other safety training applicable to Contractor's/subcontractor's project work. Except in instances where a dedicated Project Safety Manager is required, a Project Safety Representative may also function as a superintendent, foreman or crew leader on the Project, but must have sufficient experience and authority to undertake corrective actions and must qualify to be a competent person. No work is to be performed on site when a Project Safety Representative is not present.

Project Safety Manager: A dedicated, full-time project safety manager may be a contractual requirement on large projects or projects deemed by DDC to be particularly high risk. This would be in addition or in lieu of a Contractor's Project Safety Representative. This individual shall not have any other assigned duties. This individual shall have received, at a minimum an authorized 30 hour OSHA Construction Safety Course. Other examples of acceptable training are OSHA Safety and Health Standards for the Construction Industry training program (OSHA 510), Certified Safety Professional (CSP), Certified Industrial Hygienist (CIH) or a degree/certificate in a safety and health from a college-level curriculum.
A Project Safety Manager shall possess the additional training, years of experience, and skills necessary to thoroughly understand the health and safety hazards and controls for large construction projects, including the full scope of the specific Work.

QA&CS – Quality Assurance and Construction Safety of the New York City Department of Design and Construction.

Resident Engineer (RE) / Construction Project Manager (CPM): Representative of the Commissioner duly designated by the Commissioner to be his/her representative at the site of the work. (The RE/CPM may be a third-party consultant, including a Construction Management firm, retained by DDC)

Safety Program: Established by the Contractor that covers all operations of that Contractor and establishes the Contractor's overall safety policy, regulatory compliance plan and minimum safety standards. The Safety Program must be submitted prior to the commencement of work at the site and is subject to review and acceptance by the Construction Safety Unit.

Safety Questionnaire: Used by DDC to evaluate Contractor's current and past safety performance. It is required to be completed by all Contractors initially when submitting bids for Construction work, or when being pre-qualified and updated annually or as requested by the DDC.

Site Safety Manager: For certain projects, as defined in NYC Construction Codes – Title 28, the Contractor shall provide a Site Safety Manager with a Site Safety Manager License issued by the NYC Department of Building.

Site Safety Plan: A site-specific safety plan developed by the Contractor for a specific project. The Site Safety Plan must identify hazards associated with the project, and include specific safety procedures and training appropriate and necessary to complete the work. The Site Safety Plan must be submitted prior to the commencement of work at the site and is subject to review and acceptance by the Construction Safety Unit.

Unsafe or Unhealthy Condition: A condition that could be potentially hazardous to the health and safety of personnel or the public, and/or damaging to equipment, machinery, property or the environment.

Weekly Safety Meetings: Weekly documented jobsite safety meetings, given to all jobsite personnel by contractor, with the purpose of discussing general safety topics and job specific requirements encountered at the DDC work site.

Work: The construction required by the Contract Documents whether completed or partially completed, performed by the Contractor/ subcontractors. Work refers to the furnishing of labor, furnishing and incorporating materials and equipment into the construction and providing any service required by the Contract Documents to fulfill the Contractor's obligation to complete the Project.

IV. RESPONSIBILITIES

All persons who manage, perform, and provide support for construction projects shall conduct operations in compliance with the requirements identified in this Policy and all applicable governing regulatory agency requirements and guidelines pertaining to safety in construction.

A. DDC or CM Resident Engineer / Construction Project Manager

- Monitors the issuance of safety- related permits, approvals and drawings and maintains copies on site.
- Monitors construction-related work activities to confirm that they are conducted in accordance with DDC policies and all applicable regulations that pertain to construction safety.
- Maintains documentation and periodically attends weekly safety meetings and daily safety job briefings.
- Notifies the Construction Safety Unit and the ACCO's Insurance and Risk Management Unit of project- related accidents and emergencies, as per DDC's Construction Safety Emergency and Accident Notification and Response Protocol.
- Gathers facts related to all accidents and prepares DDC Construction Accident Report.

- Notifies the Construction Safety Unit within two (2) hours of the start of an inspection by any outside regulatory agency personnel, including OSHA, NYC DOB or others and forwards a copy of the inspection report within three days of its receipt.
- Monitors the conditions at the site for conformance with the contractor's Site Safety Plan and DDC construction documents.
- Notifies the contractor and DDC in the event that any condition or activity exists that is not in compliance with the contractor's Site Safety Plan, applicable federal, state or local codes or any condition that presents a potential risk of injury to the public or workers or possible damage to property.
- Notifies DDC of any unsafe or unhealthy condition and directs the contractor to provide such labor, materials, equipment and supervision to abate such conditions.
- Escort and assist QA&CS Construction Safety Auditors during the field and record inspections.
- Reports emergency conditions to the Construction Safety Unit immediately.

B. Contractors

- Submit a completed Safety Questionnaire and other safety performance related documentation with its bid or as part of a pre-qualification package.
- Complete a written Job Hazard Analysis (JHA) that identifies safety hazards for project specific work tasks and hazard control methods. A written JHA shall be available at the site for reference and included in the Site Safety Plan submitted by the contractor.
- Submit a Site Safety Plan and Safety Program within 30 days from the Award Date or as otherwise directed. The Site Safety Plan and Safety Program are subject to review and acceptance by the Construction Safety Unit prior to the commencement of work at the site. The Site Safety Plan shall be revised and updated as necessary.
- Develop project specific safety procedures to protect general public during all construction activities for the duration of the project.
- Ensure that all employees are aware of the hazards associated with the project through documented formal and informal training and/or other communications. Conduct and document weekly safety meetings and daily job briefing sessions for the duration of the project. Documentation to be provided to the RE/CPM on a monthly basis.
- Name the Project Safety Representative and Project Safety Manager, if required. The Contractor will be required to identify the Project Safety Representative and Project Safety Manager in the Site Safety Plan. Resumes, outlining the qualification and experience for the Project Safety Representative and Project Safety Manager, shall be available upon request. DDC reserves the right to request that the Contractor replace any Project Safety Representative or Project Safety Manager for any reason at any time during the project.
- Name a Competent Person(s), The Contractor will be required to identify a Competent Person(s) in the Site Safety Plan.
- Comply with all mandated federal, state and local safety and health rules and regulations.
- Comply with all provisions of the Site Safety Plan.
- Conduct applicable safety training prior to the commencement of work at the site. All training records (OSHA 10-hour, flagger, scaffold, fall protection, confined space entry, etc.) shall be provided to the RE/CPM prior to mobilization, included in the Site Safety Plan, kept current during the course of the project, and available for review. Prior to performing any work on DDC project all employees shall have successfully completed, within the previous five calendar years, a 10 Hour OSHA construction safety course.
- As part of the Site Safety Plan, prepare a site specific programs and plans, such as MPT plan, steel erection plan, confined space program, fall protection plan, demolition plan, etc. (if not otherwise provided in the contract documents) and comply with all of its provisions.
- Conduct and document site-specific safety orientation for Contractor personnel to review the hazards associated with the project as identified in the Site Safety Plan and the specific safety procedures and

controls that will be used to protect workers, the general public and property. The Project Safety Representative and/or Project Safety Manager will conduct this training prior to mobilization and provide documentation to the RE/CPM.

- Provide, replace and adequately maintain at or around the project site, suitable and sufficient signage, lights, barricades and enclosures (fences, sidewalk sheds, netting, bracing, etc.).
- Report unsafe or unhealthy conditions to the RE/CPM as soon as practical, but no more than 24 hours after discovery, and take prompt actions to remove or abate such conditions.
- Report any accidents involving injuries to workers or the general public, as well as property damage, to the RE/CPM within one (1) hour.
- Following an accident, the Contractor shall not remove or alter any equipment, structure, material, or evidence related to the accident. Exception: Immediate emergency procedures taken to secure structures, temporary construction, operations, or equipment that pose a continued imminent danger or facilitate assistance for persons who are trapped or who have sustained bodily injury.
- Notify the RE/CPM within one (1) hour of the start of an inspection by any outside regulatory agency personnel, including OSHA, NYC DOB or others.
- Maintain all records pertaining to all required compliance documents and accident and injury reports.
- Address DDC recommendations on safety, which shall in no way relieve the Contractor of its responsibilities for safety on the project. The Contractor has sole responsibility for safety.

V. SAFETY QUESTIONNAIRE

DDC requires that all Contractors provide information regarding their current and past safety performance and programs. This will be accomplished by the use of the DDC Safety Questionnaire. As a part of the bid submittal package, the contractor must submit a completed DDC Safety Questionnaire listing company workers' compensation experience modification rating and OSHA Incident Rates for the three (3) years prior to the date of the bid opening. DDC may request a Contractor to update its Questionnaire at any time or to provide more detailed information. The Contractor must provide the requested information within 15 days.

The following criteria will be used by DDC in reviewing the Contractor's responsibility, which will be based on the information provided on the questionnaire:

Criteria 1: OSHA Injury and Illness Rates (I&IR) are no greater than the average for the industry (based on the most current Bureau of Labor Statistics data for the Contractors SIC code); and

Criteria 2: Insurance workers compensation Experience Modification Rate (EMR) equal to or less than 1.0; and

Criteria 3: Any willful violations issued by OSHA or NYC DOB within the last three (3) years; and

Criteria 4: A fatality (worker or member of public) and injuries, requiring OSHA notification, experienced on or near Contractor's worksite within the last three (3) years; and

Criteria 5: Past safety performance on DDC projects (accidents; status of safety program and site safety plan submittals; etc.)

Criteria 6: OSHA violation history for the last three (3) years;

Criteria 7: Contractor shall provide OSHA Injury and Illness Records (currently OSHA 300 and 300A Logs) for the last three (3) years.

If the Contractor fails to meet the basic criteria listed above, the Construction Safety Unit may request, through the ACCO, more details concerning the Contractor's safety experience. DDC may request the Contractor to provide copies of, among other things, accident investigation reports, OSHA records, OSHA and NYC DOB citations, EPA citations and written corrective action plan.

VI. SAFETY PROGRAM AND SITE SAFETY PLAN

Within thirty (30) days from the Award Date, or as otherwise directed, the Contractor shall submit the following: (1) Safety Program, and (2) Site Safety Plan. The Safety Program shall set forth the Contractor's overall safety policy, regulatory compliance plan and minimum safety standards. The Site Safety Plan shall identify project work scope, safety hazards associated with the project tasks, and include specific safety procedures and training appropriate and necessary to complete the work. The Safety Program and the Site Safety Plan are subject to review and acceptance by the Construction Safety Unit prior to the commencement of work at the site. Failure by the Contractor to submit an acceptable Site Safety Plan and Safety Program shall be grounds for default.

Safety Program: Corporate Safety Program established by the Contractor that includes the Contractor's overall safety policy, regulatory compliance plan and basic safety procedures covering all aspects of construction operations, performed by the Contractor. The Safety Program shall be a written document with a separate section describing each element of the Safety Program. The Safety Program shall have at minimum the following elements applicable to the Contractor's operations:

- Responsibility and Organization – Contractor's company organization chart, including titles, names, contact information, roles and responsibilities for key personnel, etc.
- Safety Training Program – Contractor's corporate training program.
- Hazard Corrective Actions – Criteria for safety inspections, identification of safety non-compliances, implementation and verification of corrective actions, forms to document safety inspections results, etc.
- Accident/Exposure Investigation
- Recordkeeping and Reporting Injuries – Responsible staff; reporting and recording criteria; OSHA 300 and 300A form completion, etc.
- Fire Protection and Prevention Program
- Housekeeping
- Illumination
- Sanitation
- Personal Protective Equipment (PPE) – Company policy for the use of head protection, foot protection, hearing protection, eye and face protection, protective clothing, and any additional protective equipment based on work tasks; PPE inspection and replacement policy.
- Hazard Communication Program
- Employee Emergency Action Plan
- Protection of Underground Facilities and Utilities
- Ionizing/Nonionizing Radiation
- Material Handling, Storage, Use and Disposal
- Tools – Hand and Power
- Signs, Signals, and Barricades
- Scaffold – Local Law 52 requirements, installation, use, inspection, dismantling, training and general safety requirements.
- Welding and Cutting
- Electrical Safety
- Fall Protection
- Cranes, Derrick, Hoists, Elevators, Conveyors
- Excavation Safety
- Concrete and Masonry Construction
- Maintenance and Protection of Traffic
- Steel Erection
- Demolition
- Blasting and the Use of Explosives
- Stairways and Ladders

- Toxic and Hazardous Substances
- Alcohol and Drug Abuse Policy
- Rodents and Vermin
- Occupational Noise Exposure
- Confined Space Program – General confined Space Program: training requirements, confined space hazard evaluation procedure, atmospheric testing procedure, confined space classification, permit-required procedure, communication procedure, rescue procedure, forms, etc.
- Construction Vehicles/Heavy Equipment
- Dust Control Procedures

Site Safety Plan: The Site Safety Plan shall be a written document and shall apply to all project specific Contractor and subcontractor operations, and shall have at a minimum, the following elements with each element described in a separate section (It may be necessary to modify the basic format for certain unique or high-risk projects, such as tunnels or high-rise construction):

- Project Work Scope – Detailed information regarding work tasks that will be performed by contractor and subcontractors under the project.
- Responsibility and Organization – Contractor's organization chart with responsible staff for the project, including titles, names, contact information, roles and responsibilities.
- Safety Training and Education – OSHA 10 Hours training, requirements for daily safety briefings and weekly safety meetings, any work task specific training, responsible staff for implementation of training program for the project.
- Job Hazard Analysis (JHA) – Project specific Job Hazard Analysis including work tasks, identified hazards, hazard control methods (administrative, engineering, PPE), contractor's name, project id, location, name and signature of a certifying person, hazard assessment date.
- Protection of Public
- Hazard Corrective Actions – Responsible staff, forms, frequency of safety inspections and implementation of corrective actions.
- Accident/Exposure Investigation – Accident/incident notification procedure of DDC project staff. Project specific procedures for accident investigation and implementation of corrective actions.
- First Aid and Medical Attention – Responsible staff, location and inspection of First Aid kit, directions to local hospitals; emergency telephone numbers.
- Project Specific Fire Protection and Prevention Program.
- Project Specific Illumination Procedure.
- Project Specific Sanitation Procedure.
- Personal Protective Equipment (PPE)
- Hazard Communication Program – Responsible staff; training; SDS records, project specific list of chemical; location of the program and SDS records.
- Means of Egress – Information regarding free and unobstructed egress from all parts of the building or structure; exit marking; maintenance of means of egress, etc.
- Employee Emergency Action Plan – Project specific: responsible staff, emergency alarm system, evacuation procedure, procedure to account for employees after evacuation, etc.
- Evacuation Plan – Project specific evacuation plan (drawing/scheme) with exists and evacuation routes.
- Protection of Underground Facilities and Utilities, including responsible staff.
- Ionizing/Nonionizing Radiation – Competent person, license and qualification requirements, type of radiation, employees exposure and protection, etc.
- Material Handling, Storage, Use and Disposal – Project specific information regarding material storage and disposal.
- Signs, Signals, and Barricades – Use of danger/warning signs, sidewalk closure, safety instruction signs, pedestrian fencing and barricades, etc.
- Scaffold – Project specific scaffold types, training, scaffold drawings, competent person, criteria for project specific scaffold, falling object protection.

- Welding and Cutting – project specific procedure for welding and cutting, including all necessary safety requirements such as fire prevention, personal protective equipment, hot work permits, FDNY certificate requirements.
- Fall Protection – Project specific information regarding selected fall protection systems, fall protection plan.
- Cranes, Derrick, Hoists, Elevators, Conveyors – project specific equipment information including type, rated load capacity, manufacture specification requirements, competent person, exposure to falling load, inspection, recordkeeping, clearance requirements, communication procedure, ground lines, permits.
- Excavation Safety – Competent person, project specific protective system.
- Maintenance and Protection of Traffic Plan – Project specific MPT plan, flagmen training.
- Steel Erection – Site specific erection plan, requirements for applicable written notifications, competent person.
- Demolition – Engineering survey, including written evidence, disconnection of all effected utilities, identification of all hazardous chemicals, materials, gases, etc., floor openings, chutes, inspection and maintenance of all stairs/passageways, removal of materials/debris/structural elements, lock out/tag out, competent person.
- Blasting and the Use of Explosives – Project specific safety procedures, warning signs, training/qualification, transportation, storage and use of explosives, inspection.
- Toxic and Hazardous Substances – Safety procedures for substances to be used on project.
- Noise Mitigation Plan – Completed project specific Noise Mitigation Plan.
- Confined Space Program – Project specific Confined Space Program, responsible staff, training records, equipment information, rescue procedure, list of project specific confined spaces, forms.
- Construction Vehicles/Heavy Equipment – Type of construction vehicles/heavy equipment to be used on site.
- Dust Mitigation Plan – Completed project specific Dust Mitigation Plan.

The most critical component of the Site Safety Plan is the Job Hazard Analysis (JHA) section. The JHA form is a written document prepared by the contractor. The contractor must conduct a site and task assessment JHA to identify the major job steps and any potential safety or environmental hazards related to performance of the work, eliminate or implement controls for the potential hazards, and identify proper personal protective equipment for the task. The JHA shall be communicated to all contractor/subcontractor personnel on site.
The initial Job Hazard Assessment form shall be included in the contractor's Site Safety Plan and the current form shall be available at the construction site for reference.

Certain DDC programs, such as Job Order Contracting System (JOCS), may not necessarily require Site Safety Plans. The JOCS contractor shall submit a Safety Program. The Site Safety Plan requirement for the JOCS contractor will be determined by QA&CS based on a project work scope, construction activities and project location. In addition, certain DDC Operating Units may establish client-specific program or safety requirements. The contractor's Site Safety Plan must address such client-specific program or safety requirements.

VII. KICK-OFF MEETINGS/PRE-CONSTRUCTION AND SAFETY REVIEW

RE/CPM shall invite QA&CS Construction Safety Unit to the construction kick-off meeting. A QA&CS representative will participate in this meeting with the Contractor and RE/CPM prior to the start of the project for the purpose of:

A. Reviewing the safety issues detailed in the contract.
B. Reviewing the Site Safety Plan.
C. Reviewing any new issues or information that was not previously addressed.
D. Discussing planned inspections and audits of the site by QA&CS personnel.

VIII. EVALUATION DURING WORK IN PROGRESS

The Contractor's adherence to these Safety Requirements will be monitored throughout the project. This will be accomplished by the following:

A. Use of a safety checklist by a representative of the Construction Safety Unit or other designated DDC representative or Consultant during regular, unannounced inspections of the job site. Field Exit Conferences will be held with the RE/CPM, Contractor Project Safety Representatives.

B. The RE/CPM will continually monitor the safety and environmental performance of the contractor's employees and work methods. Deficiencies shall be brought to the attention of the contractor's representative on site for immediate correction. The DDC representative will maintain a written record of these deficiencies and have these records available upon request. Any critical deficiencies shall be immediately reported to QA&CS phone# (718) 391-1624 or (718) 391-1911.

C. If the Contractor's safety performance during the project is not up to DDC standards (safety performance measure, accident/incident rate, etc.) the Director – QA&CS, or his/her designee will meet with the Contractor's Project Safety Representative and or Project Safety Manager, the DDC Project Manager, the RE/CPM, and the DDC Environmental Specialist (if environmental issues are involved). The purpose of this meeting is to 1) determine the level of non-compliance; 2) explain and clarify the safety/environmental provisions; 3) agree on a future course of action to correct the deficiencies.

D. If the deficiencies continue to occur with inadequate attention by the contractor, this shall, among other remedies available, be grounds for default.

E. The contractor shall within 1 hour inform the RE/CPM/CM of all accidents/incidents including all fatalities, any injuries to employees or members of the general public, and property damage (e.g., structural damage, equipment rollovers, utility damage, loads dropped from crane). The RE/CPM shall notify the Construction Safety Unit as per DDC's Construction Safety Emergency and Accident Notification and Response Protocol and shall maintain a record of all contractor accidents/incidents for the project.

F. The Construction Safety Unit shall be notified within two (2) hours of the start of any NYS-DOL/ NYC-COSH/ OSHA/ EPA inspections.

IX. SAFETY PERFORMANCE EVALUATION

The contractor's safety record, including accident/incident history and DDC safety inspection results, will be considered as part of the Contractor's performance evaluation at the conclusion of the project. Poor safety performance during the course of the project shall be a reason to rate a Contractor unsatisfactory which may be reflected in the City's Vendex system and will be considered for future procurement actions as set forth in the City's Procurement Policy Board Rules.

CITY OF NEW YORK

STANDARD CONSTRUCTION CONTRACT

March 2017

(NO TEXT ON THIS PAGE)

CITY OF NEW YORK
STANDARD CONSTRUCTION CONTRACT

TABLE OF CONTENTS

CHAPTER I: THE CONTRACT AND DEFINITIONS 1
ARTICLE 1. THE CONTRACT 1
ARTICLE 2. DEFINITIONS 1
CHAPTER II: THE WORK AND ITS PERFORMANCE 4
ARTICLE 3. CHARACTER OF THE WORK 4
ARTICLE 4. MEANS AND METHODS OF CONSTRUCTION 4
ARTICLE 5. COMPLIANCE WITH LAWS 5
ARTICLE 6. INSPECTION 10
ARTICLE 7. PROTECTION OF WORK AND OF PERSONS AND PROPERTY; NOTICES AND INDEMNIFICATION 11
CHAPTER III: TIME PROVISIONS 12
ARTICLE 8. COMMENCEMENT AND PROSECUTION OF THE WORK 12
ARTICLE 9. PROGRESS SCHEDULES 13
ARTICLE 10. REQUESTS FOR INFORMATION OR APPROVAL 13
ARTICLE 11. NOTICE OF CONDITIONS CAUSING DELAY AND DOCUMENTATION OF DAMAGES CAUSED BY DELAY 14
ARTICLE 12. COORDINATION WITH OTHER CONTRACTORS 18
ARTICLE 13. EXTENSION OF TIME FOR PERFORMANCE 19
ARTICLE 14. COMPLETION AND FINAL ACCEPTANCE OF THE WORK 21
ARTICLE 15. LIQUIDATED DAMAGES 23
ARTICLE 16. OCCUPATION OR USE PRIOR TO COMPLETION 23
CHAPTER IV: SUBCONTRACTS AND ASSIGNMENTS 24
ARTICLE 17. SUBCONTRACTS 24
ARTICLE 18. ASSIGNMENTS 26
CHAPTER V: CONTRACTOR'S SECURITY AND GUARANTEE 26
ARTICLE 19. SECURITY DEPOSIT 26
ARTICLE 20. PAYMENT GUARANTEE 27
ARTICLE 21. RETAINED PERCENTAGE 29
ARTICLE 22. INSURANCE 30
ARTICLE 23. MONEY RETAINED AGAINST CLAIMS 36
ARTICLE 24. MAINTENANCE AND GUARANTY 37
CHAPTER VI: CHANGES, EXTRA WORK, AND DOCUMENTATION OF CLAIM 38
ARTICLE 25. CHANGES 38
ARTICLE 26. METHODS OF PAYMENT FOR OVERRUNS AND EXTRA WORK 38
ARTICLE 27. RESOLUTION OF DISPUTES 41
ARTICLE 28. RECORD KEEPING FOR EXTRA OR DISPUTED WORK OR WORK ON A TIME & MATERIALS BASIS 45
ARTICLE 29. OMITTED WORK 46
ARTICLE 30. NOTICE AND DOCUMENTATION OF COSTS AND DAMAGES; PRODUCTION OF FINANCIAL RECORDS 46
CHAPTER VII: POWERS OF THE RESIDENT ENGINEER,THE ENGINEER OR ARCHITECT AND THE COMMISSIONER 48
ARTICLE 31. THE RESIDENT ENGINEER 48
ARTICLE 32. THE ENGINEER OR ARCHITECT OR PROJECT MANAGER 48
ARTICLE 33. THE COMMISSIONER 48
ARTICLE 34. NO ESTOPPEL 49
CHAPTER VIII: LABOR PROVISIONS 49
ARTICLE 35. EMPLOYEES 49
ARTICLE 36. NO DISCRIMINATION 57
ARTICLE 37. LABOR LAW REQUIREMENTS 59

ARTICLE 38. PAYROLL REPORTS **64**
ARTICLE 39. DUST HAZARDS **64**
CHAPTER IX: PARTIAL AND FINAL PAYMENTS 65
ARTICLE 40. CONTRACT PRICE **65**
ARTICLE 41. BID BREAKDOWN ON LUMP SUM **65**
ARTICLE 42. PARTIAL PAYMENTS **65**
ARTICLE 43. PROMPT PAYMENT **66**
ARTICLE 44. SUBSTANTIAL COMPLETION PAYMENT **66**
ARTICLE 45. FINAL PAYMENT **67**
ARTICLE 46. ACCEPTANCE OF FINAL PAYMENT **68**
ARTICLE 47. APPROVAL BY PUBLIC DESIGN COMMISSION **69**
CHAPTER X: CONTRACTOR'S DEFAULT 69
ARTICLE 48. COMMISSIONER'S RIGHT TO DECLARE CONTRACTOR IN DEFAULT **69**
ARTICLE 49. EXERCISE OF THE RIGHT TO DECLARE DEFAULT **71**
ARTICLE 50. QUITTING THE SITE **71**
ARTICLE 51. COMPLETION OF THE WORK **71**
ARTICLE 52. PARTIAL DEFAULT **71**
ARTICLE 53. PERFORMANCE OF UNCOMPLETED WORK **72**
ARTICLE 54. OTHER REMEDIES **72**
CHAPTER XI: MISCELLANEOUS PROVISIONS 72
ARTICLE 55. CONTRACTOR'S WARRANTIES **72**
ARTICLE 56. CLAIMS AND ACTIONS THEREON **73**
ARTICLE 57. INFRINGEMENT **73**
ARTICLE 58. NO CLAIM AGAINST OFFICIALS, AGENTS OR EMPLOYEES **74**
ARTICLE 59. SERVICE OF NOTICES **74**
ARTICLE 60. UNLAWFUL PROVISIONS DEEMED STRICKEN FROM CONTRACT **74**
ARTICLE 61. ALL LEGAL PROVISIONS DEEMED INCLUDED **74**
ARTICLE 62. TAX EXEMPTION **74**
ARTICLE 63. INVESTIGATION(S) CLAUSE **76**
ARTICLE 64. TERMINATION BY THE CITY **78**
ARTICLE 65. CHOICE OF LAW, CONSENT TO JURISDICTION AND VENUE **80**
ARTICLE 66. PARTICIPATION IN AN INTERNATIONAL BOYCOTT **81**
ARTICLE 67. LOCALLY BASED ENTERPRISE PROGRAM **82**
ARTICLE 68. ANTITRUST **82**
ARTICLE 69. MACBRIDE PRINCIPLES PROVISIONS **83**
ARTICLE 70. ELECTRONIC FILING/NYC DEVELOPMENT HUB **85**
ARTICLE 71. PROHIBITION OF TROPICAL HARDWOODS **85**
ARTICLE 72. CONFLICTS OF INTEREST **85**
ARTICLE 73. MERGER CLAUSE **85**
ARTICLE 74. STATEMENT OF WORK **85**
ARTICLE 75. COMPENSATION TO BE PAID TO CONTRACTOR **85**
ARTICLE 76. ELECTRONIC FUNDS TRANSFER **85**
ARTICLE 77. RECORDS RETENTION **86**
ARTICLE 78. EXAMINATION AND VIEWING OF SITE, CONSIDERATION OF OTHER SOURCES OF INFORMATION AND CHANGED SITE CONDITIONS **86**

ARTICLE 79: PARTICIPATION BY MINORITY-OWNED AND WOMEN-OWNED BUSINESS ENTERPRISES IN CITY PROCUREMENT 87

SIGNATURES 95

ACKNOWLEDGMENT BY CORPORATION 96
ACKNOWLEDGMENT BY PARTNERSHIP....96
ACKNOWLEDGMENT BY INDIVIDUAL 96

ACKNOWLEDGMENT BY COMMISSIONER 97

AUTHORITY 98
COMPTROLLER'S CERTIFICATE 98
MAYOR'S CERTIFICATE 99
PERFORMANCE BOND #1 100
PERFORMANCE BOND #2....104
PAYMENT BOND 108

(NO TEXT ON THIS PAGE)

WITNESSETH:

The parties, in consideration of the mutual agreements contained herein, agree as follows:

CHAPTER I: THE CONTRACT AND DEFINITIONS

ARTICLE 1. THE CONTRACT

1.1 Except for titles, subtitles, headings, running headlines, tables of contents and indices (all of which are printed herein merely for convenience), the following, except for such portions thereof as may be specifically excluded, shall be deemed to be part of this **Contract**:

1.1.1 All provisions required by law to be inserted in this **Contract**, whether actually inserted or not;

1.1.2 The Contract Drawings and Specifications;

1.1.3 The General Conditions and Special Conditions, if any;

1.1.4 The **Contract**;

1.1.5 The Information for Bidders; Request for Proposals; Notice of Solicitation and Proposal For Bids; Bid or Proposal, and, if used, the Bid Booklet;

1.1.6 All Addenda issued prior to the receipt of the bids; the Notice of Award; Performance and Payment Bonds, if required; and the Notice to Proceed or the Order to Work.

1.2 Should any conflict occur in or between the Drawings and Specifications, the **Contractor** shall be deemed to have estimated the most expensive way of doing the **Work**, unless the **Contractor** shall have asked for and obtained a decision in writing from the **Commissioner** of the **Agency** that is entering into this **Contract**, before the submission of its bid, as to what shall govern.

ARTICLE 2. DEFINITIONS

2.1 The following words and expressions, or pronouns used in their stead, shall, wherever they appear in this Contract, be construed as follows, unless a different meaning is clear from the context:

2.1.1 **"Addendum"** or **"Addenda"** shall mean the additional Contract provisions and/or technical clarifications issued in writing by the Commissioner prior to the receipt of bids.

2.1.2 **"Agency"** shall mean a city, county, borough or other office, position, department, division, bureau, board or commission, or a corporation, institution or agency of government, the expenses of which are paid in whole or in part from the City treasury.

2.1.3 **"Agency Chief Contracting Officer" (ACCO)** shall mean a person delegated authority by the Commissioner to organize and supervise the procurement activity of subordinate Agency staff in conjunction with the CCPO, or his/her duly authorized representative.

2.1.4 **"Allowance"** shall mean a sum of money which the Agency may include in the total amount of the Contract for such specific contingencies as the Agency believes may be necessary to complete the Work, *e.g.*, lead or asbestos remediation, and for which the Contractor will be paid on the basis of stipulated unit prices or a formula set forth in the Contract or negotiated between the parties provided, however, that if the Contractor is not directed to use the Allowance, the Contractor shall have no right to such money and it shall be deducted from the total amount of the Contract.

2.1.5 **"City"** shall mean the City of New York.

2.1.6 **"City Chief Procurement Officer" (CCPO)** shall mean a person delegated authority by the Mayor to coordinate and oversee the procurement activity of Mayoral agency staff, including the ACCO and any offices which have oversight responsibility for the procurement of construction, or his/her duly authorized representative.

2.1.7 **"Commissioner"** shall mean the head of the Agency that has entered into this Contract, or his/her duly authorized representative.

2.1.8 **"Comptroller"** shall mean the Comptroller of the City of New York.

2.1.9 **"Contract"** or **"Contract Documents"** shall mean each of the various parts of the contract referred to in Article 1 hereof, both as a whole and severally.

2.1.10 **"Contract Drawings"** shall mean only those drawings specifically entitled as such and listed in the Specifications or in any Addendum, or any drawings furnished by the Commissioner, pertaining or supplemental thereto.

2.1.11 **"Contract Work"** shall mean everything required to be furnished and done by the Contractor by any one or more of the parts of the Contract referred to in Article 1, except Extra Work as hereinafter defined.

2.1.12 **"Contractor"** shall mean the entity which executed this Contract, whether a corporation, firm, partnership, joint venture, individual, or any combination thereof, and its, their, his/her successors, personal representatives, executors, administrators, and assigns, and any person, firm, partnership, joint venture, individual, or corporation which shall at any time be substituted in the place of the Contractor under this Contract.

2.1.13 **"Days"** shall mean calendar days, except where otherwise specified.

2.1.14 **"Engineer"** or **"Architect"** or **"Project Manager"** shall mean the person so designated in writing by the Commissioner in the Notice to Proceed or the Order to Work to act as such in relation to this Contract, including a private Architect or Engineer or Project Manager, as the case may be. Subject to written approval by the Commissioner, the Engineer, Architect or Project Manager may designate an authorized representative.

2.1.15 **"Engineering Audit Officer" (EAO)** shall mean the person so designated by the Commissioner to perform responsible auditing functions hereunder.

2.1.16 **"Extra Work"** shall mean Work other than that required by the Contract at the time of award which is authorized by the Commissioner pursuant to Chapter VI of this Contract.

2.1.17 **"Federal-Aid Contract"** shall mean a contract in which the United States (federal) Government provides financial funding as so designated in the Information for Bidders.

2.1.18 **"Final Acceptance"** shall mean final written acceptance of all the Work by the Commissioner, a copy of which shall be sent to the Contractor.

2.1.19 **"Final Approved Punch List"** shall mean a list, approved pursuant to Article 14.2.2, specifying those items of Work to be completed by the Contractor after Substantial Completion and dates for the completion of each item of Work.

2.1.20 **"Law"** or **"Laws"** shall mean the Constitution of the State of New York, the New York City Charter, the New York City Administrative Code, a statute of the United States or of the State of New York, a local law of the City of New York, any ordinance, rule or regulation having the force of law, or common law.

2.1.21 **"Materialman"** shall mean any corporation, firm, partnership, joint venture, or individual, other than employees of the Contractor, who or which contracts with the Contractor or any Subcontractor, to fabricate or deliver, or who actually fabricates or delivers, plant, materials or equipment to be incorporated in the Work.

2.1.22 **"Means and Methods of Construction"** shall mean the labor, materials, temporary structures, tools, plant, and construction equipment, and the manner and time of their use, necessary to accomplish the result intended by this Contract.

2.1.23**"Notice to Proceed" or "Order to Work"** shall mean the written notice issued by the Commissioner specifying the time for commencement of the Work and the Engineer, Architect or Project Manager.

2.1.24 **"Other Contractor(s)"** shall mean any contractor (other than the entity which executed this Contract or its Subcontractors) who or which has a contract with the City for work on or adjacent to the building or Site of the Work.

2.1.25 **"Payroll Taxes"** shall mean State Unemployment Insurance (SUI), Federal Unemployment Insurance (FUI), and payments pursuant to the Federal Insurance Contributions Act (FICA).

2.1.26 **"Project"** shall mean the public improvement to which this Contract relates.

2.1.27 **"Procurement Policy Board" (PPB)** shall mean the Agency of the City of New York whose function is to establish comprehensive and consistent procurement policies and rules which shall have broad application throughout the City.

2.1.28 **"Required Quantity"** in a unit price Contract shall mean the actual quantity of any item of Work or materials which is required to be performed or furnished in order to comply with the Contract.

2.1.29 **"Resident Engineer"** shall mean the representative of the Commissioner duly designated by the Commissioner to be his/her representative at the site of the Work.

2.1.30 **"Site"** shall mean the area upon or in which the Contractor's operations are carried on, and such other areas adjacent thereto as may be designated as such by the Engineer.

2.1.31 **"Small Tools"** shall mean items that are ordinarily required for a worker's job function, including but not limited to, equipment that ordinarily has no licensing, insurance or substantive storage costs associated with it; such as circular and chain saws, impact drills, threaders, benders, wrenches, socket tools, etc.

2.1.32 **"Specifications"** shall mean all of the directions, requirements, and standards of performance applying to the Work as hereinafter detailed and designated under the Specifications.

2.1.33 **"Subcontractor"** shall mean any person, firm or corporation, other than employees of the Contractor, who or which contracts with the Contractor or with its subcontractors to furnish, or actually furnishes labor, or labor and materials, or labor and equipment, or superintendence, supervision and/or management at the Site. Wherever the word Subcontractor appears, it shall also mean sub-Subcontractor.

2.1.34 **"Substantial Completion"** shall mean the written determination by the Engineer that the Work required under this Contract is substantially, but not entirely, complete and the approval of the **Final Approved Punch List**.

2.1.35 **"Work"** shall mean all services required to complete the Project in accordance with the Contract Documents, including without limitation, labor, material, superintendence, management, administration, equipment, and incidentals, and obtaining any and all permits, certifications and licenses as may be necessary and required to complete the Work, and shall include both Contract Work and Extra Work.

CHAPTER II: THE WORK AND ITS PERFORMANCE

ARTICLE 3. CHARACTER OF THE WORK

3.1 Unless otherwise expressly provided in the **Contract Drawings, Specifications,** and **Addenda**, the **Work** shall be performed in accordance with the best modern practice, utilizing, unless otherwise specified in writing, new and unused materials of standard first grade quality and workmanship and design of the highest quality, to the satisfaction of the **Commissioner**.

ARTICLE 4. MEANS AND METHODS OF CONSTRUCTION

4.1 Unless otherwise expressly provided in the **Contract Drawings, Specifications,** and **Addenda**, the **Means and Methods of Construction** shall be such as the **Contractor** may choose; subject, however, to the **Engineer's** right to reject the **Means and Methods of Construction** proposed by the **Contractor** which in the opinion of the **Engineer**:

4.1.1 Will constitute or create a hazard to the **Work**, or to persons or property; or

4.1.2 Will not produce finished **Work** in accordance with the terms of the **Contract**; or

4.1.3 Will be detrimental to the overall progress of the **Project**.

4.2 The **Engineer's** approval of the **Contractor's Means and Methods of Construction**, or his/her failure to exercise his/her right to reject such means or methods, shall not relieve the **Contractor**

of its obligation to complete the **Work** as provided in this **Contract**; nor shall the exercise of such right to reject create a cause of action for damages.

ARTICLE 5. COMPLIANCE WITH LAWS

5.1 The **Contractor** shall comply with all **Laws** applicable to this **Contract** and to the **Work** to be done hereunder.

5.2 Procurement Policy Board Rules: This **Contract** is subject to the Rules of the **PPB** ("**PPB** Rules") in effect at the time of the bid opening for this **Contract**. In the event of a conflict between the **PPB** Rules and a provision of this **Contract**, the **PPB** Rules shall take precedence.

5.3 Noise Control Code provisions.

5.3.1 In accordance with the provisions of Section 24-216(b) of the Administrative Code of the **City** ("Administrative Code"), Noise Abatement Contract Compliance, devices and activities which will be operated, conducted, constructed or manufactured pursuant to this **Contract** and which are subject to the provisions of the **City** Noise Control Code shall be operated, conducted, constructed, or manufactured without causing a violation of the Administrative Code. Such devices and activities shall incorporate advances in the art of noise control development for the kind and level of noise emitted or produced by such devices and activities, in accordance with regulations issued by the **Commissioner** of the **City** Department of Environmental Protection.

5.3.2 The **Contractor** agrees to comply with Section 24-219 of the Administrative Code and implementing rules codified at 15 Rules of the City of New York ("RCNY") Section 28-100 *et seq*. In accordance with such provisions, the **Contractor**, if the **Contractor** is the responsible party under such regulations, shall prepare and post a Construction Noise Mitigation Plan at each **Site**, in which the **Contractor** shall certify that all construction tools and equipment have been maintained so that they operate at normal manufacturers operating specifications. If the **Contractor** cannot make this certification, it must have in place an Alternative Noise Mitigation Plan approved by the **City** Department of Environmental Protection. In addition, the **Contractor**'s certified Construction Noise Mitigation Plan is subject inspection by the **City** Department of Environmental Protection in accordance with Section 28-101 of Title 15 of RCNY. No **Contract Work** may take place at a **Site** unless there is a Construction Noise Mitigation Plan or approved Alternative Noise Mitigation Plan in place. In addition, the **Contractor** shall create and implement a noise mitigation training program. Failure to comply with these requirements may result in fines and other penalties pursuant to the applicable provisions of the Administrative Code and RCNY.

5.4 Ultra Low Sulfur Diesel Fuel: In accordance with the provisions of Section 24-163.3 of the Administrative Code, the **Contractor** specifically agrees as follows:

5.4.1 Definitions. For purposes of this Article 5.4, the following definitions apply:

5.4.1(a) "Contractor" means any person or entity that enters into a Public Works Contract with a **City Agency**, or any person or entity that enters into an agreement with such person or entity, to perform work or provide labor or services related to such Public Works Contract.

5.4.1(b) "Motor Vehicle" means any self-propelled vehicle designed for transporting persons or property on a street or highway.

5.4.1(c) "Nonroad Engine" means an internal combustion engine (including the fuel system) that is not used in a Motor Vehicle or a vehicle used solely for competition, or that is not subject to standards promulgated under Section 7411 or Section 7521 of Title 42 of the United States Code, except that this term shall apply to internal combustion engines used to power generators, compressors or similar equipment used in any construction program or project.

5.4.1(d) "Nonroad Vehicle" means a vehicle that is powered by a Nonroad Engine, fifty (50) horsepower and greater, and that is not a Motor Vehicle or a vehicle used solely for competition, which shall include, but not be limited to, excavators, backhoes, cranes, compressors, generators, bulldozers, and similar equipment, except that this term shall not apply to horticultural maintenance vehicles used for landscaping purposes that are powered by a Nonroad Engine of sixty-five (65) horsepower or less and that are not used in any construction program or project.

5.4.1(e) "Public Works Contract" means a contract with a **City Agency** for a construction program or project involving the construction, demolition, restoration, rehabilitation, repair, renovation, or abatement of any building, structure, tunnel, excavation, roadway, park or bridge; a contract with a **City Agency** for the preparation for any construction program or project involving the construction, demolition, restoration, rehabilitation, repair, renovation, or abatement of any building, structure, tunnel, excavation, roadway, park or bridge; or a contract with a **City Agency** for any final work involved in the completion of any construction program or project involving the construction, demolition, restoration, rehabilitation, repair, renovation, or abatement of any building, structure, tunnel, excavation, roadway, park or bridge.

5.4.1(f) "Ultra Low Sulfur Diesel Fuel" means diesel fuel that has a sulfur content of no more than fifteen parts per million (15 ppm).

5.4.2 Ultra Low Sulfur Diesel Fuel

5.4.2(a) All **Contractors** shall use Ultra Low Sulfur Diesel Fuel in diesel-powered Nonroad Vehicles in the performance of this **Contract**.

5.4.2(b) Notwithstanding the requirements of Article 5.4.2(a), **Contractors** may use diesel fuel that has a sulfur content of no more than thirty parts per million (30 ppm) to fulfill the requirements of this Article 5.4.2, where the Commissioner of the **City** Department of Environmental Protection ("DEP Commissioner") has issued a determination that a sufficient quantity of Ultra Low Sulfur Diesel Fuel is not available to meet the needs of **Agencies** and **Contractors**. Any such determination shall expire after six (6) months unless renewed.

5.4.2(c) **Contractors** shall not be required to comply with this Article 5.4.2 where the **City Agency** letting this **Contract** makes a written finding, which is approved, in writing, by the DEP Commissioner, that a sufficient quantity of Ultra Low Sulfur Diesel Fuel, or diesel fuel that has a sulfur content of no more than thirty parts per million (30 ppm) is not available to meet the requirements of Section 24-163.3 of the Administrative Code, provided that such **Contractor** in its fulfillment of the

requirements of this **Contract**, to the extent practicable, shall use whatever quantity of Ultra Low Sulfur Diesel Fuel or diesel fuel that has a sulfur content of no more than thirty parts per million (30 ppm) is available. Any finding made pursuant to this Article 5.4.2(c) shall expire after sixty (60) **Days**, at which time the requirements of this Article 5.4.2 shall be in full force and effect unless the **City Agency** renews the finding in writing and such renewal is approved by the DEP Commissioner.

5.4.2(d) **Contractors** may check on determinations and approvals issued by the DEP Commissioner pursuant to Section 24-163.3 of the Administrative Code, if any, at www.dep.nyc.gov or by contacting the **City Agency** letting this **Contract**.

5.4.2(e) The requirements of this Article 5.4.2 do not apply where they are precluded by federal or State funding requirements or where the **Contract** is an emergency procurement.

5.4.3 Best Available Technology

5.4.3(a) All **Contractors** shall utilize the best available technology for reducing the emission of pollutants for diesel-powered Nonroad Vehicles in the performance of this **Contract**. For determinations of best available technology for each type of diesel-powered Nonroad Vehicle, **Contractors** shall comply with the regulations of the **City** Department of Environmental Protection, as and when adopted, Chapter 14 of Title 15 of the Rules of the City of New York (RCNY). The **Contractor** shall fully document all steps in the best available technology selection process and shall furnish such documentation to the **City Agency** or the DEP Commissioner upon request. The **Contractor** shall retain all documentation generated in the best available technology selection process for as long as the selected best available technology is in use.

5.4.3(b) No **Contractor** shall be required to replace best available technology for reducing the emission of pollutants or other authorized technology utilized for a diesel-powered Nonroad Vehicle in accordance with the provisions of this Article 5.4.3 within three (3) years of having first utilized such technology for such vehicle.

5.4.3(c) This Article 5.4.3 shall not apply to any vehicle used to satisfy the requirements of a specific Public Works Contract for fewer than twenty (20) **Days**.

5.4.3(d) The **Contractor** shall not be required to comply with this Article 5.4.3 with respect to a diesel-powered Nonroad Vehicle under the following circumstances:

5.4.3(d)(i) Where the **City Agency** makes a written finding, which is approved, in writing, by the DEP Commissioner, that the best available technology for reducing the emission of pollutants as required by this Article 5.4.3 is unavailable for such vehicle, the **Contractor** shall use whatever technology for reducing the emission of pollutants, if any, is available and appropriate for such vehicle.

5.4.3(d)(ii) Where the DEP Commissioner has issued a written waiver based upon the **Contractor** having demonstrated to the DEP Commissioner that the use of the best available technology for reducing the emission of pollutants might endanger the operator of such vehicle or those working near such vehicle, due to engine malfunction, the **Contractor** shall use whatever technology for

reducing the emission of pollutants, if any, is available and appropriate for such vehicle, which would not endanger the operator of such vehicle or those working near such vehicle.

5.4.3(d)(iii) In determining which technology to use for the purposes of Articles 5.4.3(d)(i) and 5.4.3(d)(ii) above, the **Contractor** shall primarily consider the reduction in emissions of particulate matter and secondarily consider the reduction in emissions of nitrogen oxides associated with the use of such technology, which shall in no event result in an increase in the emissions of either such pollutant.

5.4.3(d)(iv) The **Contractor** shall submit requests for a finding or a waiver pursuant to this Article 5.4.3(d) in writing to the DEP Commissioner, with a copy to the **ACCO** of the **City Agency** letting this **Contract**. Any finding or waiver made or issued pursuant to Articles 5.4.3(d)(i) and 5.4.3(d)(ii) above shall expire after one hundred eighty (180) **Days**, at which time the requirements of Article 5.4.3(a) shall be in full force and effect unless the **City Agency** renews the finding, in writing, and the DEP Commissioner approves such finding, in writing, or the DEP Commissioner renews the waiver, in writing.

5.4.3(e) The requirements of this Article 5.4.3 do not apply where they are precluded by federal or State funding requirements or where the **Contract** is an emergency procurement.

5.4.4 Section 24-163 of the Administrative Code. The **Contractor** shall comply with Section 24-163 of the Administrative Code related to the idling of the engines of motor vehicles while parking.

5.4.5 Compliance

5.4.5(a) The **Contractor's** compliance with Article 5.4 may be independently monitored. If it is determined that the **Contractor** has failed to comply with any provision of Article 5.4, any costs associated with any independent monitoring incurred by the **City** shall be reimbursed by the **Contractor**.

5.4.5(b) Any **Contractor** who violates any provision of Article 5.4, except as provided in Article 5.4.5(c) below, shall be liable for a civil penalty between the amounts of one thousand ($1,000) and ten thousand ($10,000) dollars, in addition to twice the amount of money saved by such **Contractor** for failure to comply with Article 5.4.

5.4.5(c) No **Contractor** shall make a false claim with respect to the provisions of Article 5.4 to a **City Agency**. Where a **Contractor** has been found to have done so, such **Contractor** shall be liable for a civil penalty of twenty thousand ($20,000) dollars, in addition to twice the amount of money saved by such **Contractor** in association with having made such false claim.

5.4.6 Reporting

5.4.6(a) For all Public Works Contracts covered by this Article 5.4, the **Contractor** shall report to the **City Agency** the following information:

5.4.6(a)(i) The total number of diesel-powered Nonroad Vehicles used to fulfill the requirements of this Public Works Contract;

5.4.6(a)(ii) The number of such Nonroad Vehicles that were powered by Ultra Low Sulfur Diesel Fuel;

5.4.6(a)(iii) The number of such Nonroad Vehicles that utilized the best available technology for reducing the emission of pollutants, including a breakdown by vehicle model and the type of technology;

5.4.6(a)(iv) The number of such Nonroad Vehicles that utilized such other authorized technology in accordance with Article 5.4.3, including a breakdown by vehicle model and the type of technology used for each such vehicle;

5.4.6(a)(v) The locations where such Nonroad Vehicles were used; and

5.4.6(a)(vi) Where a determination is in effect pursuant to Article 5.4.2(b) or 5.4.2(c), detailed information concerning the **Contractor's** efforts to obtain Ultra Low Sulfur Diesel Fuel or diesel fuel that has a sulfur content of no more than thirty parts per million (30 ppm).

5.4.6(b) The **Contractor** shall submit the information required by Article 5.4.6(a) at the completion of **Work** under the Public Works Contract and on a yearly basis no later than August 1 throughout the term of the Public Works Contract. The yearly report shall cover **Work** performed during the preceding fiscal year (July 1 - June 30).

5.5 Ultra Low Sulfur Diesel Fuel. In accordance with the Coordinated Construction Act for Lower Manhattan, as amended:

5.5.1 Definitions. For purposes of this Article 5.5, the following definitions apply:

5.5.1(a) "Lower Manhattan" means the area to the south of and within the following lines: a line beginning at a point where the United States pierhead line in the Hudson River as it exists now or may be extended would intersect with the southerly line of West Houston Street in the Borough of Manhattan extended, thence easterly along the southerly side of West Houston Street to the southerly side of Houston Street, thence easterly along the southerly side of Houston Street to the southerly side of East Houston Street, thence northeasterly along the southerly side of East Houston Street to the point where it would intersect with the United States pierhead line in the East River as it exists now or may be extended, including tax lots within or immediately adjacent thereto.

5.5.1(b) "Lower Manhattan Redevelopment Project" means any project in Lower Manhattan that is funded in whole or in part with federal or State funding, or any project intended to improve transportation between Lower Manhattan and the two air terminals in the **City** known as LaGuardia Airport and John F. Kennedy International Airport, or between Lower Manhattan and the air terminal in Newark known as Newark Liberty International Airport, and that is funded in whole or in part with federal funding.

5.5.1(c) "Nonroad Engine" means an internal combustion engine (including the fuel system) that is not used in a Motor Vehicle or a vehicle used solely for competition, or that is not subject to standards promulgated under Section 7411 or Section 7521 of Title 42 of the United States Code, except that this term shall apply to internal combustion engines used to power generators, compressors or similar equipment used in any construction program or project.

5.5.1(d) "Nonroad Vehicle" means a vehicle that is powered by a Nonroad Engine, fifty (50) horsepower (HP) and greater, and that is not a Motor Vehicle or a vehicle used solely for competition, which shall include, but not be limited to, excavators, backhoes, cranes, compressors, generators, bulldozers, and similar equipment, except that this terms shall not apply to horticultural maintenance vehicles used for landscaping purposes that are powered by a Nonroad Engine of sixty-five (65) HP or less and that are not used in any construction program or project.

5.5.1(e) "Ultra Low Sulfur Diesel Fuel" means diesel fuel that has a sulfur content of no more than fifteen parts per million (15 ppm).

5.5.2 Requirements. **Contractors** and **Subcontractors** are required to use only Ultra Low Sulfur Diesel Fuel to power the diesel-powered Nonroad Vehicles with engine HP rating of fifty (50) HP and above used on a Lower Manhattan Redevelopment Project and, where practicable, to reduce the emission of pollutants by retrofitting such Nonroad Vehicles with oxidation catalysts, particulate filters, or technology that achieves lowest particulate matter emissions.

5.6 Pesticides. In accordance with Section 17-1209 of the Administrative Code, to the extent that the **Contractor** or any **Subcontractor** applies pesticides to any property owned or leased by the **City**, the **Contractor,** and any **Subcontractor** shall comply with Chapter 12 of the Administrative Code.

5.7 Waste Treatment, Storage, and Disposal Facilities and Transporters. In connection with the **Work**, the **Contractor** and any **Subcontractor** shall use only those waste treatment, storage, and disposal facilities and waste transporters that possess the requisite license, permit or other governmental approval necessary to treat, store, dispose, or transport the waste, materials or hazardous substances.

5.8 Environmentally Preferable Purchasing. The **Contractor** shall ensure that products purchased or leased by the **Contractor** or any **Subcontractor** for the **Work** that are not specified by the **City** or are submitted as equivalents to a product specified by the **City** comply with the requirements of the New York City Environmentally Preferable Purchasing Program contained in Chapter 11 of Title 43 of the RCNY, pursuant to Chapter 3 of Title 6 of the Administrative Code.

ARTICLE 6. INSPECTION

6.1 During the progress of the **Work** and up to the date of **Final Acceptance**, the **Contractor** shall at all times afford the representatives of the **City** every reasonable, safe, and proper facility for inspecting all **Work** done or being done at the **Site** and also for inspecting the manufacture or preparation of materials and equipment at the place of such manufacture or preparation.

6.2 The **Contractor's** obligation hereunder shall include the uncovering or taking down of finished **Work** and its restoration thereafter; provided, however, that the order to uncover, take down and restore shall be in writing, and further provided that if **Work** thus exposed proves satisfactory, and if the **Contractor** has complied with Article 6.1, such uncovering or taking down and restoration shall be

considered an item of **Extra Work** to be paid for in accordance with the provisions of Article 26. If the **Work** thus exposed proves unsatisfactory, the **City** has no obligation to compensate the **Contractor** for the uncovering, taking down or restoration.

6.3 Inspection and approval by the **Commissioner**, the **Engineer**, **Project Manager**, or **Resident Engineer**, of finished **Work** or of **Work** being performed, or of materials and equipment at the place of manufacture or preparation, shall not relieve the **Contractor** of its obligation to perform the **Work** in strict accordance with the **Contract**. Finished or unfinished **Work** not found to be in strict accordance with the **Contract** shall be replaced as directed by the **Engineer**, even though such **Work** may have been previously approved and paid for. Such corrective **Work** is **Contract Work** and shall not be deemed **Extra Work**.

6.4 Rejected **Work** and materials shall be promptly taken down and removed from the **Site**, which must at all times be kept in a reasonably clean and neat condition.

ARTICLE 7. PROTECTION OF WORK AND OF PERSONS AND PROPERTY; NOTICES AND INDEMNIFICATION

7.1 During the performance of the **Work** and up to the date of **Final Acceptance**, the **Contractor** shall be under an absolute obligation to protect the finished and unfinished **Work** against any damage, loss, injury, theft and/or vandalism and in the event of such damage, loss, injury, theft and/or vandalism, it shall promptly replace and/or repair such **Work** at the **Contractor's** sole cost and expense, as directed by the **Resident Engineer**. The obligation to deliver finished **Work** in strict accordance with the **Contract** prior to **Final Acceptance** shall be absolute and shall not be affected by the **Resident Engineer's** approval of, or failure to prohibit, the **Means and Methods of Construction** used by the **Contractor**.

7.2 During the performance of the **Work** and up to the date of **Final Acceptance**, the **Contractor** shall take all reasonable precautions to protect all persons and the property of the **City** and of others from damage, loss or injury resulting from the **Contractor's**, and/or its **Subcontractors'** operations under this **Contract.** The **Contractor's** obligation to protect shall include the duty to provide, place or replace, and adequately maintain at or about the **Site** suitable and sufficient protection such as lights, barricades, and enclosures.

7.3 The **Contractor** shall comply with the notification requirements set forth below in the event of any loss, damage or injury to **Work**, persons or property, or any accidents arising out of the operations of the **Contractor** and/or its **Subcontractors** under this **Contract**.

7.3.1 The **Contractor** shall make a full and complete report in writing to the **Resident Engineer** within three (3) **Days** after the occurrence.

7.3.2 The **Contractor** shall also send written notice of any such event to all insurance carriers that issued potentially responsive policies (including commercial general liability insurance carriers for events relating to the **Contractor**'s own employees) no later than twenty (20) days after such event and again no later than twenty (20) days after the initiation of any claim and/or action resulting therefrom. Such notice shall contain the following information: the number of the insurance policy, the name of the Named Insured, the date and location of the incident, and the identity of the persons injured or property damaged. For any policy on which the **City** and/or the **Engineer**, **Architect**, or **Project Manager** are Additional Insureds, such notice shall expressly specify that "this notice is

being given on behalf of the City of New York as Additional Insured, such other Additional Insureds, as well as the Named Insured."

7.3.2(a) Whenever such notice is sent under a policy on which the **City** is an Additional Insured, the **Contractor** shall provide copies of the notice to the **Comptroller,** the **Commissioner** and the **City** Corporation Counsel. The copy to the **Comptroller** shall be sent to the Insurance Unit, NYC Comptroller's Office, 1 Centre Street – Room 1222, New York, New York, 10007. The copy to the **Commissioner** shall be sent to the address set forth in Schedule A of the General Conditions. The copy to the **City** Corporation Counsel shall be sent to Insurance Claims Specialist, Affirmative Litigation Division, New York City Law Department, 100 Church Street, New York, New York 10007.

7.3.2(b) If the **Contractor** fails to provide any of the foregoing notices to any appropriate insurance carrier(s) in a timely and complete manner, the **Contractor** shall indemnify the **City** for all losses, judgments, settlements, and expenses, including reasonable attorneys' fees, arising from an insurer's disclaimer of coverage citing late notice by or on behalf of the **City**.

7.4 To the fullest extent permitted by law, the **Contractor** shall defend, indemnify, and hold the **City**, its employees, and officials (the "Indemnitees") harmless against any and all claims (including but not limited to claims asserted by any employee of the **Contractor** and/or its **Subcontractors**) and costs and expenses of whatever kind (including but not limited to payment or reimbursement of attorneys' fees and disbursements) allegedly arising out of or in any way related to the operations of the **Contractor** and/or its **Subcontractors** in the performance of this **Contract** or from the **Contractor's** and/or its **Subcontractors'** failure to comply with any of the provisions of this **Contract** or of the **Law**. Such costs and expenses shall include all those incurred in defending the underlying claim and those incurred in connection with the enforcement of this Article 7.4 by way of cross-claim, third-party claim, declaratory action or otherwise. The parties expressly agree that the indemnification obligation hereunder contemplates (1) full indemnity in the event of liability imposed against the Indemnitees without negligence and solely by reason of statute, operation of **Law** or otherwise; and (2) partial indemnity in the event of any actual negligence on the part of the Indemnitees either causing or contributing to the underlying claim (in which case, indemnification will be limited to any liability imposed over and above that percentage attributable to actual fault whether by statute, by operation of **Law**, or otherwise). Where partial indemnity is provided hereunder, all costs and expenses shall be indemnified on a pro rata basis.

7.4.1 Indemnification under Article 7.4 or any other provision of the **Contract** shall operate whether or not **Contractor** or its **Subcontractors** have placed and maintained the insurance specified under Article 22.

7.5 The provisions of this Article 7 shall not be deemed to create any new right of action in favor of third parties against the **Contractor** or the **City**.

CHAPTER III: TIME PROVISIONS

ARTICLE 8. COMMENCEMENT AND PROSECUTION OF THE WORK

8.1 The **Contractor** shall commence the **Work** on the date specified in the **Notice to Proceed** or the **Order to Work**. The time for performance of the **Work** under the **Contract** shall be computed from

the date specified in the **Notice to Proceed** or the **Order to Work. TIME BEING OF THE ESSENCE** to the **City**, the **Contractor** shall thereafter prosecute the **Work** diligently, using such **Means and Methods of Construction** as are in accord with Article 4 herein and as will assure its completion not later than the date specified in this Contract, or on the date to which the time for completion may be extended.

ARTICLE 9. PROGRESS SCHEDULES

9.1 To enable the **Work** to be performed in an orderly and expeditious manner, the **Contractor**, within fifteen (15) **Days** after the **Notice to Proceed** or **Order to Work**, unless otherwise directed by the **Engineer**, shall submit to the **Engineer** a proposed progress schedule based on the Critical Path Method in the form of a bar graph or in such other form as specified by the **Engineer**, and monthly cash flow requirements, showing:

9.1.1 The anticipated time of commencement and completion of each of the various operations to be performed under this **Contract**; and

9.1.2 The sequence and interrelation of each of these operations with the others and with those of other related contracts; and

9.1.3 The estimated time required for fabrication or delivery, or both, of all materials and equipment required for the **Work**, including the anticipated time for obtaining required approvals pursuant to Article 10; and

9.1.4 The estimated amount in dollars the **Contractor** will claim on a monthly basis.

9.2 The proposed schedule shall be revised as directed by the **Engineer**, until finally approved by the **Engineer**, and after such approval, subject to the provisions of Article 11, shall be strictly adhered to by the **Contractor**.

9.3 If the **Contractor** shall fail to adhere to the approved progress schedule, or to the schedule as revised pursuant to Article 11, it shall promptly adopt such other or additional **Means and Methods of Construction**, at its sole cost and expense, as will make up for the time lost and will assure completion in accordance with the approved progress schedule. The approval by the **City** of a progress schedule which is shorter than the time allotted under the **Contract** shall not create any liability for the **City** if the approved progress schedule is not met.

9.4 The **Contractor** will not receive any payments until the proposed progress schedule is submitted.

ARTICLE 10. REQUESTS FOR INFORMATION OR APPROVAL

10.1 From time to time as the **Work** progresses and in the sequence indicated by the approved progress schedule, the **Contractor** shall submit to the **Engineer** a specific request in writing for each item of information or approval required by the **Contractor**. These requests shall state the latest date upon which the information or approval is actually required by the **Contractor**, and shall be submitted in a reasonable time in advance thereof to provide the **Engineer** a sufficient time to act upon such submissions, or any necessary re-submissions thereof.

10.2 The **Contractor** shall not have any right to an extension of time on account of delays due to the **Contractor's** failure to submit requests for the required information or the required approval in accordance with the above requirements.

ARTICLE 11. NOTICE OF CONDITIONS CAUSING DELAY AND DOCUMENTATION OF DAMAGES CAUSED BY DELAY

11.1 After the commencement of any condition which is causing or may cause a delay in completion of the **Work**, including conditions for which the **Contractor** may be entitled to an extension of time, the following notifications and submittals are required:

11.1.1 Within fifteen (15) **Days** after the **Contractor** becomes aware or reasonably should be aware of each such condition, the **Contractor** must notify the **Resident Engineer** or **Engineer**, as directed by the **Commissioner**, in writing of the existence, nature and effect of such condition upon the approved progress schedule and the **Work**, and must state why and in what respects, if any, the condition is causing or may cause a delay. Such notice shall include a description of the construction activities that are or could be affected by the condition and may include any recommendations the **Contractor** may have to address the delay condition and any activities the **Contractor** may take to avoid or minimize the delay.

11.1.2 If the **Contractor** shall claim to be sustaining damages for delay as provided for in this Article 11,within forty-five (45) **Days** from the time such damages are first incurred for each such condition, the **Contractor** shall submit to the **Commissioner** a verified written statement of the details and estimates of the amounts of such damages, including categories of expected damages and projected monthly costs, together with documentary evidence of such damages as the **Contractor** may have at the time of submission ("statement of delay damages"), as further detailed in Article 11.6. The **Contractor** may submit the above statement within such additional time as may be granted by the **Commissioner** in writing upon written request therefor.

11.1.3 Articles 11.1.1 and 11.1.2 do not relieve the **Contractor** of its obligation to comply with the provisions of Article 44.

11.2 Failure of the **Contractor** to strictly comply with the requirements of Article 11.1.1 may, in the discretion of the **Commissioner**, be deemed sufficient cause to deny any extension of time on account of delay arising out of such condition. Failure of the **Contractor** to strictly comply with the requirements of both Articles 11.1.1 and 11.1.2 shall be deemed a conclusive waiver by the **Contractor** of any and all claims for damages for delay arising from such condition and no right to recover on such claims shall exist.

11.3 When appropriate and directed by the **Engineer**, the progress schedule shall be revised by the **Contractor** until finally approved by the **Engineer**. The revised progress schedule must be strictly adhered to by the **Contractor**.

11.4 Compensable Delays

11.4.1 The **Contractor** agrees to make claim only for additional costs attributable to delay in the performance of this **Contract** necessarily extending the time for completion of the **Work** or resulting from acceleration directed by the **Commissioner** and required to maintain the progress schedule, occasioned solely by any act or omission to act of the **City** listed below. The **Contractor** also agrees that delay from any other cause shall be

compensated, if at all, solely by an extension of time to complete the performance of the **Work**.

11.4.1.1 The failure of the **City** to take reasonable measures to coordinate and progress the **Work** to the extent required by the **Contract**, except that the City shall not be responsible for the **Contractor's** obligation to coordinate and progress the **Work** of its **Subcontractors**.

11.4.1.2 Unreasonable delays attributable to the review of shop drawings, the issuance of change orders, or the cumulative impact of change orders that were not brought about by any act or omission of the **Contractor**.

11.4.1.3 The unavailability of the **Site** caused by acts or omissions of the **City**..

11.4.1.4 The issuance by the **Engineer** of a stop work order that was not brought about through any act or omission of the **Contractor**.

11.4.1.5 Differing site conditions or environmental hazards that were neither known nor reasonably ascertainable on a pre-bid inspection of the **Site** or review of the bid documents or other publicly available sources, and that are not ordinarily encountered in the **Project**'s geographical area or neighborhood or in the type of **Work** to be performed.

11.4.1.6 Delays caused by the **City's** bad faith or its willful, malicious, or grossly negligent conduct;

11.4.1.7 Delays not contemplated by the parties;

11.4.1.8 Delays so unreasonable that they constitute an intentional abandonment of the **Contract** by the **City**; and

11.4.1.9 Delays resulting from the **City's** breach of a fundamental obligation of the **Contract**.

11.4.2 No claim may be made for any alleged delay in **Substantial Completion** of the **Work** if the **Work** will be or is substantially completed by the date of **Substantial Completion** provided for in Schedule A unless acceleration has been directed by the **Commissioner** to meet the date of **Substantial Completion** set forth in Schedule A, or unless there is a provision in the **Contract** providing for additional compensation for early completion.

11.4.3 The provisions of this Article 11 apply only to claims for additional costs attributable to delay and do not preclude determinations by the **Commissioner** allowing reimbursements for additional costs for **Extra Work** pursuant to Articles 25 and 26 of this **Contract**. To the extent that any cost attributable to delay is reimbursed as part of a change order, no additional claim for compensation under this Article 11 shall be allowed.

11.5 Non-Compensable Delays. The **Contractor** agrees to make no claim for, and is deemed to have included in its bid prices for the various items of the **Contract**, the extra/additional costs attributable to any delays caused by or attributable to the items set forth below. For such items, the **Contractor** shall be compensated, if at all, solely by an extension of time to complete the performance of the **Work**, in accordance with the provisions of Article 13. Such extensions of time will be granted, if at all, pursuant to the grounds set forth in Article 13.3.

11.5.1 The acts or omissions of any third parties, including but not limited to **Other Contractors**, public/ governmental bodies (other than **City Agencies**), utilities or private enterprises, who are disclosed in the **Contract Documents** or are ordinarily encountered or generally recognized as related to the **Work**;

11.5.2 Any situation which was within the contemplation of the parties at the time of entering into the **Contract**, including any delay indicated or disclosed in the **Contract Documents** or that would be generally recognized by a reasonably prudent contractor as related to the nature of the **Work**, and/or the existence of any facility or appurtenance owned, operated or maintained by any third party, as indicated or disclosed in the **Contract Documents** or ordinarily encountered or generally recognized as related to the nature of the **Work**;

11.5.3 Restraining orders, injunctions or judgments issued by a court which were caused by a Contractor's submission, action or inaction or by a Contractor's **Means and Methods of Construction**, or by third parties, unless such order, injunction or judgment was the result of an act or omission by the **City**;

11.5.4 Any labor boycott, strike, picketing, lockout or similar situation;

11.5.5 Any shortages of supplies or materials, or unavailability of equipment, required by the **Contract Work**;

11.5.6 Climatic conditions, storms, floods, droughts, tidal waves, fires, hurricanes, earthquakes, landslides or other catastrophes or acts of God, or acts of war or of the public enemy or terrorist acts, including the **City's** reasonable responses thereto; and

11.5.7 **Extra Work** which does not significantly affect the overall completion of the **Contract**, reasonable delays in the review or issuance of change orders or field orders and/or in shop drawing reviews or approvals.

11.6 Required Content of Submission of Statement of Delay Damages

11.6.1 In the verified written statement of delay damages required by Article 11.1.2, the following information shall be provided by the **Contractor**:

11.6.1.1 For each delay, the start and end dates of the claimed periods of delay and, in addition, a description of the operations that were delayed, an explanation of how they were delayed, and the reasons for the delay, including identifying the applicable act or omission of the City listed in Article 11.4.

11.6.1.2 A detailed factual statement of the claim providing all necessary dates, locations and items of **Work** affected by the claim.

11.6.1.3 The estimated amount of additional compensation sought and a breakdown of that amount into categories as described in Article 11.7.

11.6.1.4 Any additional information requested by the **Commissioner**.

11.7 Recoverable Costs

11.7.1 Delay damages may be recoverable for the following costs actually and necessarily incurred in the performance of the **Work**:

11.7.1.1 Direct labor, including payroll taxes (subject to statutory wage caps) and supplemental benefits, based on time and materials records;

11.7.1.2 Necessary materials (including transportation to the **Site**), based on time and material records;

11.7.1.3 Reasonable rental value of necessary plant and equipment other than small tools, plus fuel/energy costs according to the applicable formula set forth in Articles 26.2.4 and/or 26.2.8, based on time and material records;

11.7.1.4 Additional insurance and bond costs;

11.7.1.5 Extended **Site** overhead, field office rental, salaries of field office staff, on-site project managers and superintendents, field office staff vehicles, **Project**-specific storage, field office utilities and telephone, and field office consumables;

11.7.1.6 Labor escalation costs based on actual costs;

11.7.1.7 Materials and equipment escalation costs based on applicable industry indices unless documentation of actual increased cost is provided;

11.7.1.8 Additional material and equipment storage costs based on actual documented costs and additional costs necessitated by extended manufacturer warranty periods; and

11.7.1.9 Extended home office overhead calculated based on the following formula:

(1) Subtract from the original **Contract** amount the amount earned by original contractual **Substantial Completion** date (not including change orders);

(2) Remove 15% overhead and profit from the calculation in item (1) by dividing the results of item (1) by 1.15;

(3) Multiply the result of item (2) by 7.25% for the total home office overhead;

(4) Multiply the result of item (3) by 7.25% for the total profit; and

(5) The total extended home office overhead will be the total of items (3) and (4).

11.7.2 Recoverable Subcontractor Costs. When the **Work** is performed by a **Subcontractor**, the **Contractor** may be paid the actual and necessary costs of such subcontracted **Work** as outlined above in Articles 11.7.1.1 through 11.7.1.8, and an additional overhead of 5% of the costs outlined in Articles 11.7.1.1 through 11.7.1.3.

11.7.3 Non-Recoverable Costs. The parties agree that the **City** will have no liability for the following items and the **Contractor** agrees it shall make no claim for the following items:

11.7.3.1 Profit, or loss of anticipated or unanticipated profit, except as provided in Article 11.7.1.9;

11.7.3.2 Consequential damages, including, but not limited to, construction or bridge loans or interest paid on such loans, loss of bonding capacity, bidding opportunities, or interest in investment, or any resulting insolvency;

11.7.3.3 Indirect costs or expenses of any nature except those included in Article 11.7.1;

11.7.3.4 Direct or indirect costs attributable to performance of **Work** where the **Contractor**, because of situations or conditions within its control, has not progressed the **Work** in a satisfactory manner; and

11.7.3.5 Attorneys' fees and dispute and claims preparation expenses.

11.8 Any claims for delay under this Article 11 are not subject to the jurisdiction of the Contract Dispute Resolution Board pursuant to the dispute resolution process set forth in Article 27.

11.9 Any compensation provided to the **Contractor** in accordance with this Article 11 will be made pursuant to a claim filed with the **Comptroller**. Nothing in this Article 11 extends the time for the **Contractor** to file an action with respect to a claim within six months after **Substantial Completion** pursuant to Article 56.

ARTICLE 12. COORDINATION WITH OTHER CONTRACTORS

12.1 During the progress of the **Work**, **Other Contractors** may be engaged in performing other work or may be awarded other contracts for additional work on this **Project**. In that event, the **Contractor** shall coordinate the **Work** to be done hereunder with the work of such **Other Contractors** and the **Contractor** shall fully cooperate with such **Other Contractors** and carefully fit its own **Work** to that provided under other contracts as may be directed by the **Engineer**. The **Contractor** shall not commit or permit any act which will interfere with the performance of work by any **Other Contractors**.

12.2 If the **Engineer** determines that the **Contractor** is failing to coordinate its **Work** with the work of **Other Contractors** as the **Engineer** has directed, then the **Commissioner** shall have the right to withhold any payments otherwise due hereunder until the **Contractor** completely complies with the **Engineer's** directions.

12.3 The **Contractor** shall notify the **Engineer** in writing if any **Other Contractor** on this **Project** is failing to coordinate its work with the **Work** of this **Contract**. If the **Engineer** finds such charges to be true, the **Engineer** shall promptly issue such directions to the **Other Contractor** with respect thereto as the situation may require. The **City** shall not, however, be liable for any damages suffered by any **Other Contractor's** failure to coordinate its work with the **Work** of this **Contract** or by reason of the **Other Contractor's** failure to promptly comply with the directions so issued by the **Engineer**, or by reason of any **Other Contractor's** default in performance, it being understood that the **City** does not guarantee the responsibility or continued efficiency of any contractor. The **Contractor** agrees to make no claim against the **City** for any damages relating to or arising out of any directions issued by the **Engineer** pursuant to this Article 12 (including but not limited to the failure of any **Other Contractor** to comply or promptly comply with such directions), or the failure of any **Other Contractor** to coordinate its work, or the default in performance of any **Other Contractor**.

12.4 The **Contractor** shall indemnify and hold the **City** harmless from any and all claims or judgments for damages and from costs and expenses to which the **City** may be subjected or which it may suffer or incur by reason of the **Contractor's** failure to comply with the **Engineer's** directions promptly; and the **Comptroller** shall have the right to exercise the powers reserved in Article 23 with respect to any claims which may be made for damages due to the **Contractor's** failure to comply with the **Engineer's** directions promptly. Insofar as the facts and **Law** relating to any claim would preclude the **City** from being completely indemnified by the **Contractor**, the **City** shall be partially indemnified by the **Contractor** to the fullest extent provided by **Law**.

12.5 Should the **Contractor** sustain any damage through any act or omission of any **Other Contractor** having a contract with the **City** for the performance of work upon the **Site** or of work which may be necessary to be performed for the proper prosecution of the **Work** to be performed hereunder, or through any act or omission of a subcontractor of such **Other Contractor**, the **Contractor** shall have no claim against the **City** for such damage, but shall have a right to recover such damage from the **Other**

Contractor under the provision similar to the following provisions which apply to this **Contract** and have been or will be inserted in the contracts with such **Other Contractors**:

12.5.1 Should any **Other Contractor** having or who shall hereafter have a contract with the **City** for the performance of work upon the **Site** sustain any damage through any act or omission of the **Contractor** hereunder or through any act or omission of any **Subcontractor** of the **Contractor**, the **Contractor** agrees to reimburse such **Other Contractor** for all such damages and to defend at its own expense any action based upon such claim and if any judgment or claim (even if the allegations of the action are without merit) against the **City** shall be allowed the **Contractor** shall pay or satisfy such judgment or claim and pay all costs and expenses in connection therewith and agrees to indemnify and hold the **City** harmless from all such claims. Insofar as the facts and **Law** relating to any claim would preclude the **City** from being completely indemnified by the **Contractor**, the **City** shall be partially indemnified by the **Contractor** to the fullest extent provided by **Law**.

12.6 The **City's** right to indemnification hereunder shall in no way be diminished, waived or discharged by its recourse to assessment of liquidated damages as provided in Article 15, or by the exercise of any other remedy provided for by **Contract** or by **Law**.

ARTICLE 13. EXTENSION OF TIME FOR PERFORMANCE

13.1 If performance by the **Contractor** is delayed for a reason set forth in Article 13.3, the **Contractor** may be allowed a reasonable extension of time in conformance with this Article 13 and the **PPB** Rules.

13.2 Any extension of time may be granted only by the **ACCO** or by the Board for the Extension of Time (hereafter "Board") (as set forth below) upon written application by the **Contractor**.

13.3 Grounds for Extension: If such application is made, the **Contractor** shall be entitled to an extension of time for delay in completion of the **Work** caused solely:

13.3.1 By the acts or omissions of the **City**, its officials, agents or employees; or

13.3.2 By the act or omissions of **Other Contractors** on this **Project**; or

13.3.3 By supervening conditions entirely beyond the control of either party hereto (such as, but not limited to, acts of God or the public enemy, excessive inclement weather, war or other national emergency making performance temporarily impossible or illegal, or strikes or labor disputes not brought about by any act or omission of the **Contractor**).

13.3.4 The **Contractor** shall, however, be entitled to an extension of time for such causes only for the number of **Days** of delay which the **ACCO** or the Board may determine to be due solely to such causes, and then only if the **Contractor** shall have strictly complied with all of the requirements of Articles 9 and 10.

13.4 The **Contractor** shall not be entitled to receive a separate extension of time for each of several causes of delay operating concurrently, but, if at all, only for the actual period of delay in completion of the **Work** as determined by the **ACCO** or the Board, irrespective of the number of causes contributing to produce such delay. If one of several causes of delay operating concurrently results from any act, fault or omission of the **Contractor** or of its **Subcontractors** or **Materialmen**, and would of itself (irrespective

of the concurrent causes) have delayed the **Work**, no extension of time will be allowed for the period of delay resulting from such act, fault or omission.

13.5 The determination made by the **ACCO** or the Board on an application for an extension of time shall be binding and conclusive on the **Contractor**.

13.6 The **ACCO** or the Board acting entirely within their discretion may grant an application for an extension of time for causes of delay other than those herein referred.

13.7 Permitting the **Contractor** to continue with the **Work** after the time fixed for its completion has expired, or after the time to which such completion may have been extended has expired, or the making of any payment to the **Contractor** after such time, shall in no way operate as a waiver on the part of the **City** of any of its rights under this **Contract**.

13.8 Application for Extension of Time:

13.8.1 Before the **Contractor's** time extension request will be considered, the **Contractor** shall notify the **ACCO** of the condition which allegedly has caused or is causing the delay, and shall submit a written application to the **ACCO** identifying:

13.8.1(a) The **Contractor**; the registration number; and **Project** description;

13.8.1(b) Liquidated damage assessment rate, as specified in the **Contract**;

13.8.1(c) Original total bid price;

13.8.1(d) The original **Contract** start date and completion date;

13.8.1(e) Any previous time extensions granted (number and duration); and

13.8.1(f) The extension of time requested.

13.8.2 In addition, the application for extension of time shall set forth in detail:

13.8.2(a) The nature of each alleged cause of delay in completing the **Work**;

13.8.2(b) The date upon which each such cause of delay began and ended and the number of **Days** attributable to each such cause;

13.8.2(c) A statement that the **Contractor** waives all claims except for those delineated in the application, and the particulars of any claims which the **Contractor** does not agree to waive. For time extensions for **Substantial Completion** and final completion payments, the application shall include a detailed statement of the dollar amounts of each element of claim item reserved; and

13.8.2(d) A statement indicating the **Contractor's** understanding that the time extension is granted only for purposes of permitting continuation of **Contract** performance and payment for **Work** performed and that the **City** retains its right to conduct an investigation and assess liquidated damages as appropriate in the future.

13.9 Analysis and Approval of Time Extensions:

13.9.1 For time extensions for partial payments, a written determination shall be made by the **ACCO** who may, for good and sufficient cause, extend the time for the performance of the **Contract** as follows:

13.9.1(a) If the **Work** is to be completed within six (6) months, the time for performance may be extended for sixty (60) **Days**;

13.9.1(b) If the **Work** is to be completed within less than one (1) year but more than six (6) months, an extension of ninety (90) **Days** may be granted;

13.9.1(c) If the **Contract** period exceeds one (1) year, besides the extension granted in Article 13.9.1(b), an additional thirty (30) **Days** may be granted for each multiple of six (6) months involved beyond the one (1) year period; or

13.9.1(d) If exceptional circumstances exist, the **ACCO** may extend the time for performance beyond the extensions in Articles 13.9.1(a), 13.9.1(b), and 13.9.1(c). In that event, the **ACCO** shall file with the Mayor's Office of Contract Services a written explanation of the exceptional circumstances.

13.9.2 For extensions of time for **Substantial Completion** and final completion payments, the **Engineer**, in consultation with the **ACCO**, shall prepare a written analysis of the delay (including a preliminary determination of the causes of delay, the beginning and end dates for each such cause of delay, and whether the delays are excusable under the terms of this **Contract**). The report shall be subject to review by and approval of the Board, which shall have authority to question its analysis and determinations and request additional facts or documentation. The report as reviewed and made final by the Board shall be made a part of the **Agency** contract file. Neither the report itself nor anything contained therein shall operate as a waiver or release of any claim the **City** may have against the **Contractor** for either actual or liquidated damages.

13.9.3 Approval Mechanism for Time Extensions for **Substantial Completion** or Final Completion Payments: An extension shall be granted only with the approval of the Board which is comprised of the **ACCO** of the **Agency**, the **City** Corporation Counsel, and the **Comptroller**, or their authorized representatives.

13.9.4 Neither the granting of any application for an extension of time to the **Contractor** or any **Other Contractor** on this **Project** nor the papers, records or reports related to any application for or grant of an extension of time or determination related thereto shall be referred to or offered in evidence by the **Contractor** or its attorneys in any action or proceeding.

13.10 No Damage for Delay: The **Contractor** agrees to make no claim for damages for delay in the performance of this **Contract** occasioned by any act or omission to act of the **City** or any of its representatives, except as provided for in Article 11.

ARTICLE 14. COMPLETION AND FINAL ACCEPTANCE OF THE WORK

14.1 Date for **Substantial Completion**: The **Contractor** shall substantially complete the **Work** within the time fixed in Schedule A of the General Conditions, or within the time to which such **Substantial Completion** may be extended.

14.2 Determining the Date of **Substantial Completion**: The **Work** will be deemed to be substantially complete when the two conditions set forth below have been met.

14.2.1 Inspection: The **Engineer** or **Resident Engineer**, as applicable, has inspected the **Work** and has made a written determination that it is substantially complete.

14.2.2 Approval of **Final Approved Punch List** and Date for **Final Acceptance**: Following inspection of the **Work**, the **Engineer/Resident Engineer** shall furnish the **Contractor** with a final punch list, specifying all items of **Work** to be completed and proposing dates for the completion of each specified item of **Work**. The **Contractor** shall then submit in writing to the **Engineer/Resident Engineer** within ten (10) **Days** of the **Engineer/Resident Engineer** furnishing the final punch list either acceptance of the dates or proposed alternative dates for the completion of each specified item of **Work**. If the **Contractor** neither accepts the dates nor proposes alternative dates within ten (10) **Days**, the schedule proposed by the **Engineer/Resident Engineer** shall be deemed accepted. If the **Contractor** proposes alternative dates, then, within a reasonable time after receipt, the **Engineer/Resident Engineer**, in a written notification to the **Contractor**, shall approve the **Contractor's** completion dates or, if they are unable to agree, the **Engineer/Resident Engineer** shall establish dates for the completion of each item of **Work**. The latest completion date specified shall be the date for **Final Acceptance** of the **Work**.

14.3 Date of **Substantial Completion**. The date of approval of the **Final Approved Punch List**, shall be the date of **Substantial Completion**. The date of approval of the **Final Approved Punch List** shall be either (a) if the **Contractor** approves the final punch list and proposed dates for completion furnished by the **Engineer/Resident Engineer**, the date of the **Contractor**'s approval; or (b) if the **Contractor** neither accepts the dates nor proposes alternative dates, ten (10) **Days** after the **Engineer/Resident Engineer** furnishes the **Contractor** with a final punch list and proposed dates for completion; or (c) if the **Contractor** proposes alternative dates, the date that the **Engineer/Resident Engineer** sends written notification to the **Contractor** either approving the **Contractor**'s proposed alternative dates or establishing dates for the completion for each item of **Work**.

14.4 Determining the Date of **Final Acceptance**: The **Work** will be accepted as final and complete as of the date of the **Engineer's/Resident Engineer**'s inspection if, upon such inspection, the **Engineer/Resident Engineer** finds that all items on the **Final Approved Punch List** are complete and no further **Work** remains to be done. The **Commissioner** will then issue a written determination of **Final Acceptance**.

14.5 Request for Inspection: Inspection of the **Work** by the **Engineer/Resident Engineer** for the purpose of **Substantial Completion** or **Final Acceptance** shall be made within fourteen (14) **Days** after receipt of the **Contractor's** written request therefor.

14.6 Request for Re-inspection: If upon inspection for the purpose of **Substantial Completion** or **Final Acceptance**, the **Engineer/Resident Engineer** determines that there are items of **Work** still to be performed, the **Contractor** shall promptly perform them and then request a re-inspection. If upon re-inspection, the **Engineer/Resident Engineer** determines that the **Work** is substantially complete or finally accepted, the date of such re-inspection shall be the date of **Substantial Completion** or **Final Acceptance**. Re-inspection by the **Engineer/Resident Engineer** shall be made within ten (10) **Days** after receipt of the **Contractor's** written request therefor.

14.7 Initiation of Inspection by the **Engineer/Resident Engineer**: If the **Contractor** does not request inspection or re-inspection of the **Work** for the purpose of **Substantial Completion** or **Final Acceptance**, the **Engineer/Resident Engineer** may initiate such inspection or re-inspection.

ARTICLE 15. LIQUIDATED DAMAGES

15.1 In the event the **Contractor** fails to substantially complete the **Work** within the time fixed for such **Substantial Completion** in Schedule A of the General Conditions, plus authorized time extensions, or if the **Contractor**, in the sole determination of the **Commissioner**, has abandoned the **Work**, the **Contractor** shall pay to the **City** the sum fixed in Schedule A of the General Conditions, for each and every **Day** that the time consumed in substantially completing the **Work** exceeds the time allowed therefor; which said sum, in view of the difficulty of accurately ascertaining the loss which the **City** will suffer by reason of delay in the **Substantial Completion** of the **Work** hereunder, is hereby fixed and agreed as the liquidated damages that the **City** will suffer by reason of such delay, and not as a penalty. This Article 15 shall also apply to the **Contractor** whether or not the **Contractor** is defaulted pursuant to Chapter X of this **Contract**. Neither the failure to assess liquidated damages nor the granting of any time extension shall operate as a waiver or release of any claim the **City** may have against the **Contractor** for either actual or liquidated damages.

15.2 Liquidated damages received hereunder are not intended to be nor shall they be treated as either a partial or full waiver or discharge of the **City's** right to indemnification, or the **Contractor's** obligation to indemnify the **City**, or to any other remedy provided for in this **Contract** or by **Law**.

15.3 The **Commissioner** may deduct and retain out of the monies which may become due hereunder, the amount of any such liquidated damages; and in case the amount which may become due hereunder shall be less than the amount of liquidated damages suffered by the **City**, the **Contractor** shall be liable to pay the difference.

ARTICLE 16. OCCUPATION OR USE PRIOR TO COMPLETION

16.1 Unless otherwise provided for in the **Specifications**, the **Commissioner** may take over, use, occupy or operate any part of the **Work** at any time prior to **Final Acceptance**, upon written notification to the **Contractor**. The **Engineer** or **Resident Engineer**, as applicable, shall inspect the part of the **Work** to be taken over, used, occupied, or operated, and will furnish the **Contractor** with a written statement of the **Work**, if any, which remains to be performed on such part. The **Contractor** shall not object to, nor interfere with, the **Commissioner's** decision to exercise the rights granted by Article 16. In the event the **Commissioner** takes over, uses, occupies, or operates any part of the **Work:**

16.1.1 the **Engineer/Resident Engineer** shall issue a written determination of **Substantial Completion** with respect to such part of the **Work**;

16.1.2 the **Contractor** shall be relieved of its absolute obligation to protect such part of the unfinished **Work** in accordance with Article 7;

16.1.3 the **Contractor's** guarantee on such part of the **Work** shall begin on the date of such use by the **City**; and;

16.1.4 the **Contractor** shall be entitled to a return of so much of the amount retained in accordance with Article 21 as it relates to such part of the **Work**, except so much thereof as may be retained under Articles 24 and 44.

CHAPTER IV: SUBCONTRACTS AND ASSIGNMENTS

ARTICLE 17. SUBCONTRACTS

17.1 The **Contractor** shall not make subcontracts totaling an amount more than the percentage of the total **Contract** price fixed in Schedule A of the General Conditions, without prior written permission from the **Commissioner**. All subcontracts made by the **Contractor** shall be in writing. No **Work** may be performed by a **Subcontractor** prior to the **Contractor** entering into a written subcontract with the **Subcontractor** and complying with the provisions of this Article 17.

17.2 Before making any subcontracts, the **Contractor** shall submit a written statement to the **Commissioner** giving the name and address of the proposed **Subcontractor**; the portion of the **Work** and materials which it is to perform and furnish; the cost of the subcontract; the VENDEX questionnaire if required; the proposed subcontract if requested by the **Commissioner**; and any other information tending to prove that the proposed **Subcontractor** has the necessary facilities, skill, integrity, past experience, and financial resources to perform the **Work** in accordance with the terms and conditions of this **Contract**.

17.3 In addition to the requirements in Article 17.2, **Contractor** is required to list the **Subcontractor** in the web based Subcontractor Reporting System through the City's Payee Information Portal (PIP), available at www.nyc.gov/pip.[1] For each **Subcontractor** listed, **Contractor** is required to provide the following information: maximum contract value, description of **Subcontractor's** Work, start and end date of the subcontract and identification of the **Subcontractor**'s industry. Thereafter, **Contractor** will be required to report in the system the payments made to each **Subcontractor** within 30 days of making the payment. If any of the required information changes throughout the Term of the **Contract**, **Contractor** will be required to revise the information in the system.

Failure of the **Contractor** to list a **Subcontractor** and/or to report **Subcontractor** payments in a timely fashion may result in the **Commissioner** declaring the **Contractor** in default of the **Contract** and will subject **Contractor** to liquidated damages in the amount of $100 per day for each day that the **Contractor** fails to identify a **Subcontractor** along with the required information about the **Subcontractor** and/or fails to report payments to a **Subcontractor**, beyond the time frames set forth herein or in the notice from the **City**. Article 15 shall govern the issue of liquidated damages.

17.4 If an approved **Subcontractor** elects to subcontract any portion of its subcontract, the proposed sub-subcontract shall be submitted in the same manner as directed above.

17.5 The **Commissioner** will notify the **Contractor** in writing whether the proposed **Subcontractor** is approved. If the proposed **Subcontractor** is not approved, the **Contractor** may submit another proposed **Subcontractor** unless the **Contractor** decides to do the **Work**. No **Subcontractor** shall be permitted to enter or perform any work on the **Site** unless approved.

17.6 Before entering into any subcontract hereunder, the **Contractor** shall provide the proposed **Subcontractor** with a complete copy of this document and inform the proposed **Subcontractor** fully and completely of all provisions and requirements of this **Contract** relating either directly or indirectly to the **Work** to be performed and the materials to be furnished under such subcontract, and every such

[1] In order to use the new system, a PIP account will be required. Detailed instructions on creating a PIP account and using the new system are also available at www.nyc.gov/pip. Additional assistance with PIP may be obtained by emailing the Financial Information Services Agency Help Desk at pip@fisa.nyc.gov.

Subcontractor shall expressly stipulate that all labor performed and materials furnished by the **Subcontractor** shall strictly comply with the requirements of this **Contract**.

17.7 Documents given to a prospective **Subcontractor** for the purpose of soliciting the **Subcontractor's** bid shall include either a copy of the bid cover or a separate information sheet setting forth the **Project** name, the **Contract** number (if available), the **Agency** (as noted in Article 2.1.6), and the **Project's** location.

17.8 The **Commissioner's** approval of a **Subcontractor** shall not relieve the **Contractor** of any of its responsibilities, duties, and liabilities hereunder. The **Contractor** shall be solely responsible to the **City** for the acts or defaults of its **Subcontractor** and of such **Subcontractor's** officers, agents, and employees, each of whom shall, for this purpose, be deemed to be the agent or employee of the **Contractor** to the extent of its subcontract.

17.9 If the **Subcontractor** fails to maintain the necessary facilities, skill, integrity, past experience, and financial resources (other than due to the **Contractor's** failure to make payments where required) to perform the **Work** in accordance with the terms and conditions of this **Contract**, the **Contractor** shall promptly notify the **Commissioner** and replace such **Subcontractor** with a newly approved **Subcontractor** in accordance with this Article 17.

17.10 The **Contractor** shall be responsible for ensuring that all **Subcontractors** performing **Work** at the **Site** maintain all insurance required by **Law**.

17.11 The **Contractor** shall promptly, upon request, file with the **Engineer** a conformed copy of the subcontract and its cost. The subcontract shall provide the following:

17.11.1 Payment to **Subcontractors**: The agreement between the **Contractor** and its **Subcontractor** shall contain the same terms and conditions as to method of payment for **Work**, labor, and materials, and as to retained percentages, as are contained in this **Contract**.

17.11.2 Prevailing Rate of Wages: The agreement between the **Contractor** and its **Subcontractor** shall include the prevailing wage rates and supplemental benefits to be paid in accordance with Labor Law Section 220.

17.11.3 Section 6-123 of the Administrative Code: Pursuant to the requirements of Section 6-123 of the Administrative Code, every agreement between the **Contractor** and a **Subcontractor** in excess of fifty thousand ($50,000) dollars shall include a provision that the **Subcontractor** shall not engage in any unlawful discriminatory practice as defined in Title VIII of the Administrative Code (Section 8-101 *et seq.*).

17.11.4 All requirements required pursuant to federal and/or state grant agreement(s), if applicable to the **Work**.

17.12 The **Commissioner** may deduct from the amounts certified under this **Contract** to be due to the **Contractor**, the sum or sums due and owing from the **Contractor** to the **Subcontractors** according to the terms of the said subcontracts, and in case of dispute between the **Contractor** and its **Subcontractor**, or **Subcontractors**, as to the amount due and owing, the **Commissioner** may deduct and withhold from the amounts certified under this **Contract** to be due to the **Contractor** such sum or sums as may be claimed by such **Subcontractor**, or **Subcontractors**, in a sworn affidavit, to be due and owing until such time as such claim or claims shall have been finally resolved.

17.13 On contracts where performance bonds and payment bonds are executed, the **Contractor** shall include on each requisition for payment the following data: **Subcontractor's** name, value of the subcontract, total amount previously paid to **Subcontractor** for **Work** previously requisitioned, and the amount, including retainage, to be paid to the **Subcontractor** for **Work** included in the requisition.

17.14 On **Contracts** where performance bonds and payment bonds are not executed, the **Contractor** shall include with each requisition for payment submitted hereunder, a signed statement from each and every **Subcontractor** and/or **Materialman** for whom payment is requested in such requisition. Such signed statement shall be on the letterhead of the **Subcontractor** and/or **Materialman** for whom payment is requested and shall (i) verify that such **Subcontractor** and/or **Materialman** has been paid in full for all **Work** performed and/or material supplied to date, exclusive of any amount retained and any amount included on the current requisition, and (ii) state the total amount of retainage to date, exclusive of any amount retained on the current requisition.

ARTICLE 18. ASSIGNMENTS

18.1 The **Contractor** shall not assign, transfer, convey or otherwise dispose of this **Contract**, or the right to execute it, or the right, title or interest in or to it or any part thereof, or assign, by power of attorney or otherwise any of the monies due or to become due under this **Contract**, unless the previous written consent of the **Commissioner** shall first be obtained thereto, and the giving of any such consent to a particular assignment shall not dispense with the necessity of such consent to any further or other assignments.

18.2 Such assignment, transfer, conveyance or other disposition of this **Contract** shall not be valid until filed in the office of the **Commissioner** and the **Comptroller**, with the written consent of the **Commissioner** endorsed thereon or attached thereto.

18.3 Failure to obtain the previous written consent of the **Commissioner** to such an assignment, transfer, conveyance or other disposition, may result in the revocation and annulment of this **Contract**. The **City** shall thereupon be relieved and discharged from any further liability to the **Contractor**, its assignees, transferees or sublessees, who shall forfeit and lose all monies therefor earned under the **Contract**, except so much as may be required to pay the **Contractor's** employees.

18.4 The provisions of this clause shall not hinder, prevent, or affect an assignment by the **Contractor** for the benefit of its creditors made pursuant to the **Laws** of the State of New York.

18.5 This **Contract** may be assigned by the **City** to any corporation, agency or instrumentality having authority to accept such assignment.

CHAPTER V: CONTRACTOR'S SECURITY AND GUARANTEE

ARTICLE 19. SECURITY DEPOSIT

19.1 If performance and payment bonds are required, the **City** shall retain the bid security to ensure that the successful bidder executes the **Contract** and furnishes the required payment and performance security within ten (10) **Days** after notice of the award of the **Contract**. If the successful bidder fails to execute the **Contract** and furnish the required payment and performance security, the **City** shall retain such bid security as set forth in the Information for Bidders. If the successful bidder executes the

Contract and furnishes the required payment and performance security, the **City** shall return the bid security within a reasonable time after the furnishing of such bonds and execution of the **Contract** by the **City**.

19.2 If performance and payment bonds are not required, the bid security shall be retained by the **City** as security for the **Contractor**'s faithful performance of the **Contract**. If partial payments are provided, the bid security will be returned to the **Contractor** after the sum retained under Article 21 equals the amount of the bid security, subject to other provisions of this **Contract**. If partial payments are not provided, the bid security will be released when final payment is certified by the **City** for payment.

19.3 If the **Contractor** is declared in default under Article 48 prior to the return of the deposit, or if any claim is made such as referred to in Article 23, the amount of such deposit, or so much thereof as the **Comptroller** may deem necessary, may be retained and then applied by the **Comptroller**:

19.3.1 To compensate the **City** for any expense, loss or damage suffered or incurred by reason of or resulting from such default, including the cost of re-letting and liquidated damages; or

19.3.2 To indemnify the **City** against any and all claims.

ARTICLE 20. PAYMENT GUARANTEE

20.1 On **Contracts** where one hundred (100%) percent performance bonds and payment bonds are executed, this Article 20 does not apply.

20.2 In the event the terms of this **Contract** do not require the **Contractor** to provide a payment bond or where the **Contract** does not require a payment bond for one hundred (100%) percent of the **Contract** price, the **City** shall, in accordance with the terms of this Article 20, guarantee payment of all lawful claims for:

20.2.1 Wages and compensation for labor performed and/or services rendered; and

20.2.2 Materials, equipment, and supplies provided, whether incorporated into the **Work** or not, when demands have been filed with the **City** as provided hereinafter by any person, firm, or corporation which furnished labor, material, equipment, supplies, or any combination thereof, in connection with the **Work** performed hereunder (hereinafter referred to as the "beneficiary") at the direction of the **City** or the **Contractor**.

20.3 The provisions of Article 20.2 are subject to the following limitations and conditions:

20.3.1 If the **Contractor** provides a payment bond for a value that is less than one hundred (100%) percent of the value of the **Contract Work**, the payment bond provided by the **Contractor** shall be primary (and non-contributing) to the payment guarantee provided under this Article 20.

20.3.2 The guarantee is made for the benefit of all beneficiaries as defined in Article 20.2 provided that those beneficiaries strictly adhere to the terms and conditions of Article 20.3.4 and 20.3.5.

20.3.3 Nothing in this Article 20 shall prevent a beneficiary providing labor, services or material for the **Work** from suing the **Contractor** for any amounts due and owing the beneficiary by the **Contractor**.

20.3.4 Every person who has furnished labor or material, to the **Contractor** or to a **Subcontractor** of the **Contractor**, in the prosecution of the **Work** and who has not been paid in full therefor before the expiration of a period of ninety (90) **Days** after the date on which the last of the labor was performed or material was furnished by him/her for which the claim is made, shall have the right to sue on this payment guarantee in his/her own name for the amount, or the balance thereof, unpaid at the time of commencement of the action; provided, however, that a person having a direct contractual relationship with a **Subcontractor** of the **Contractor** but no contractual relationship express or implied with the **Contractor** shall not have a right of action upon the guarantee unless he/she shall have given written notice to the **Contractor** within one hundred twenty (120) **Days** from the date on which the last of the labor was performed or the last of the material was furnished, for which his/her claim is made, stating with substantial accuracy the amount claimed and the name of the party to whom the material was furnished or for whom the labor was performed. The notice shall be served by delivering the same personally to the **Contractor** or by mailing the same by registered mail, postage prepaid, in an envelope addressed to the **Contractor** at any place where it maintains an office or conducts its business; provided, however, that where such notice is actually received by the **Contractor** by other means, such notice shall be deemed sufficient.

20.3.5 Except as provided in Labor Law Section 220-g, no action on this payment guarantee shall be commenced after the expiration of the one-year limitations period set forth in Section 137(4)(b) of the State Finance Law.

20.3.6 The **Contractor** shall promptly forward to the **City** any notice or demand received pursuant to Article 20.3.4. The **Contractor** shall inform the **City** of any defenses to the notice or demand and shall forward to the **City** any documents the **City** requests concerning the notice or demand.

20.3.7 All demands made against the **City** by a beneficiary of this payment guarantee shall be presented to the **Engineer** along with all written documentation concerning the demand which the **Engineer** deems reasonably appropriate or necessary, which may include, but shall not be limited to: the subcontract; any invoices presented to the **Contractor** for payment; the notarized statement of the beneficiary that the demand is due and payable, that a request for payment has been made of the **Contractor** and that the demand has not been paid by the **Contractor** within the time allowed for such payment by the subcontract; and copies of any correspondence between the beneficiary and the **Contractor** concerning such demand. The **City** shall notify the **Contractor** that a demand has been made. The **Contractor** shall inform the **City** of any defenses to the demand and shall forward to the **City** any documents the **City** requests concerning the demand.

20.3.8 The **City** shall make payment only if, after considering all defenses presented by the **Contractor**, it determines that the payment is due and owing to the beneficiary making the demand.

20.3.9 No beneficiary shall be entitled to interest from the **City**, or to any other costs, including, but not limited to, attorneys' fees, except to the extent required by State Finance Law Section 137.

20.4 Upon the receipt by the **City** of a demand pursuant to this Article 20, the **City** may withhold from any payment otherwise due and owing to the **Contractor** under this **Contract** an amount sufficient to satisfy the demand.

20.4.1 In the event the **City** determines that the demand is valid, the **City** shall notify the **Contractor** of such determination and the amount thereof and direct the **Contractor** to immediately pay such amount to the beneficiary. In the event the **Contractor**, within seven (7) **Days** of receipt of such notification from the **City**, fails to pay the beneficiary, such failure shall constitute an automatic and irrevocable assignment of payment by the **Contractor** to the beneficiary for the amount of the demand determined by the **City** to be valid. The **Contractor**, without further notification or other process, hereby gives its unconditional consent to such assignment of payment to the beneficiary and authorizes the **City**, on its behalf, to take all necessary actions to implement such assignment of payment, including without limitation the execution of any instrument or documentation necessary to effectuate such assignment.

20.4.2In the event that the amount otherwise due and owing to the **Contractor** by the **City** is insufficient to satisfy such demand, the **City** may, at its option, require payment from the **Contractor** of an amount sufficient to cover such demand and exercise any other right to require or recover payment which the **City** may have under **Law** or **Contract**.

20.4.3 In the event the **City** determines that the demand is invalid, any amount withheld pending the **City**'s review of such demand shall be paid to the **Contractor**; provided, however, no lien has been filed. In the event a claim or an action has been filed, the terms and conditions set forth in Article 23 shall apply. In the event a lien has been filed, the parties will be governed by the provisions of the Lien Law of the State of New York.

20.5 The provisions of this Article 20 shall not prevent the **City** and the **Contractor** from resolving disputes in accordance with the **PPB** Rules, where applicable.

20.6 In the event the **City** determines that the beneficiary is entitled to payment pursuant to this Article 20, such determination and any defenses and counterclaims raised by the **Contractor** shall be taken into account in evaluating the **Contractor's** performance.

20.7 Nothing in this Article 20 shall relieve the **Contractor** of the obligation to pay the claims of all persons with valid and lawful claims against the **Contractor** relating to the **Work**.

20.8 The **Contractor** shall not require any performance, payment or other bonds of any **Subcontractor** if this **Contract** does not require such bonds of the **Contractor**.

20.9 The payment guarantee made pursuant to this Article 20 shall be construed in a manner consistent with Section 137 of the State Finance Law and shall afford to persons furnishing labor or materials to the **Contractor** or its **Subcontractors** in the prosecution of the **Work** under this **Contract** all of the rights and remedies afforded to such persons by such section, including but not limited to, the right to commence an action against the **City** on the payment guarantee provided by this Article 20 within the one-year limitations period set forth in Section 137(4)(b).

ARTICLE 21. RETAINED PERCENTAGE

21.1 If this **Contract** requires one hundred (100%) percent performance and payment security, then as further security for the faithful performance of this **Contract**, the **Commissioner** shall deduct, and

retain until the substantial completion of the **Work**, five (5%) percent of the value of **Work** certified for payment in each partial payment voucher.

21.2 If this **Contract** does not require one hundred (100%) percent performance and payment security and if the price for which this **Contract** was awarded does not exceed one million ($1,000,000) dollars, then as further security for the faithful performance of this **Contract**, the **Commissioner** shall deduct, and retain until the substantial completion of the **Work**, five (5%) percent of the value of **Work** certified for payment in each partial payment voucher.

21.3 If this **Contract** does not require one hundred (100%) percent performance and payment security and if the price for which this **Contract** was awarded exceeds one million ($1,000,000) dollars, then as further security for the faithful performance of this **Contract,** the **Commissioner** shall deduct, and retain until the substantial completion of the **Work**, up to ten (10%) percent of the value of **Work** certified for payment in each partial payment voucher. The percentage to be retained is set forth in Schedule A of the General Conditions.

ARTICLE 22. INSURANCE

22.1 Types of Insurance: The **Contractor** shall procure and maintain the following types of insurance if, and as indicated, in Schedule A of the General Conditions (with the minimum limits and special conditions specified in Schedule A). Such insurance shall be maintained from the date the **Contractor** is required to provide Proof of Insurance pursuant to Article 22.3.1 through the date of completion of all required **Work** (including punch list work as certified in writing by the **Resident Engineer**), except for insurance required pursuant to Article 22.1.4, which may terminate upon **Substantial Completion** of the **Contract**. All insurance shall meet the requirements set forth in this Article 22. Wherever this Article requires that insurance coverage be "at least as broad" as a specified form (including all ISO forms), there is no obligation that the form itself be used, provided that the **Contractor** can demonstrate that the alternative form or endorsement contained in its policy provides coverage at least as broad as the specified form.

22.1.1 Commercial General Liability Insurance: The **Contractor** shall provide Commercial General Liability Insurance covering claims for property damage and/or bodily injury, including death, which may arise from any of the operations under this **Contract**. Coverage under this insurance shall be at least as broad as that provided by the latest edition of Insurance Services Office ("ISO") Form CG 0001. Such insurance shall be "occurrence" based rather than "claims-made" and include, without limitation, the following types of coverage: premises operations; products and completed operations; contractual liability (including the tort liability of another assumed in a contract); broad form property damage; independent contractors; explosion, collapse and underground (XCU); construction means and methods; and incidental malpractice. Such insurance shall contain a "per project" aggregate limit, as specified in Schedule A, that applies separately to operations under this **Contract**.

22.1.1(a) Such Commercial General Liability Insurance shall name the **City** as an Additional Insured. Coverage for the City shall specifically include the **City's** officials and employees, be at least as broad as the latest edition of ISO Form CG 20 10 and provide completed operations coverage at least as broad as the latest edition of ISO Form CG 20 37.

22.1.1(b) Such Commercial General Liability Insurance shall name all other entities designated as additional insureds in Schedule A but only for claims arising from the

Contractor's operations under this **Contract**, with coverage at least as broad as the latest edition of ISO Form CG 20 26.

22.1.1(c) If the **Work** requires a permit from the Department of Buildings pursuant to 1 RCNY Section 101-08, the **Contractor** shall provide Commercial General Liability Insurance with limits of at least those required by 1 RCNY section 101-08 or greater limits required by the Agency in accordance with Schedule A. If the **Work** does not require such a permit, the minimum limits shall be those provided for in Schedule A.

22.1.1(d) If any of the **Work** includes repair of a waterborne vessel owned by or to be delivered to the **City**, such Commercial General Liability shall include, or be endorsed to include, Ship Repairer's Legal Liability Coverage to protect against, without limitation, liability arising from navigation of such vessels prior to delivery to and acceptance by the **City**.

22.1.2 Workers' Compensation Insurance, Employers' Liability Insurance, and Disability Benefits Insurance: The **Contractor** shall provide, and shall cause its **Subcontractors** to provide, Workers Compensation Insurance, Employers' Liability Insurance, and Disability Benefits Insurance in accordance with the **Laws** of the State of New York on behalf of all employees providing services under this **Contract** (except for those employees, if any, for which the **Laws** require insurance only pursuant to Article 22.1.3).

22.1.3 United States Longshoremen's and Harbor Workers Act and/or Jones Act Insurance: If specified in Schedule A of the General Conditions or if required by **Law**, the **Contractor** shall provide insurance in accordance with the United States Longshoremen's and Harbor Workers Act and/or the Jones Act, on behalf of all qualifying employees providing services under this **Contract**.

22.1.4 Builders Risk Insurance: If specified in Schedule A of the General Conditions, the **Contractor** shall provide Builders Risk Insurance on a completed value form for the total value of the **Work** through **Substantial Completion** of the **Work** in its entirety. Such insurance shall be provided on an All Risk basis and include coverage, without limitation, for windstorm (including named windstorm), storm surge, flood and earth movement. Unless waived by the **Commissioner**, it shall include coverage for ordinance and law, demolition and increased costs of construction, debris removal, pollutant clean up and removal, and expediting costs. Such insurance shall cover, without limitation, (a) all buildings and/or structures involved in the **Work**, as well as temporary structures at the **Site**, and (b) any property that is intended to become a permanent part of such building or structure, whether such property is on the **Site**, in transit or in temporary storage. Policies shall name the **Contractor** as Named Insured and list the **City** as both an Additional Insured and a Loss Payee as its interest may appear.

22.1.4(a) Policies of such insurance shall specify that, in the event a loss occurs at an occupied facility, occupancy of such facility is permitted without the consent of the issuing insurance company.

22.1.4(b) Such insurance may be provided through an Installation Floater, at the **Contractor's** option, if it otherwise conforms with the requirements of this Article 22.1.4.

22.1.5 Commercial Automobile Liability Insurance: The **Contractor** shall provide Commercial Automobile Liability Insurance for liability arising out of ownership,

maintenance or use of any owned (if any), non-owned and hired vehicles to be used in connection with this **Contract**. Coverage shall be at least as broad as the latest edition of ISO Form CA0001. If vehicles are used for transporting hazardous materials, the Automobile Liability Insurance shall be endorsed to provide pollution liability broadened coverage for covered vehicles (endorsement CA 99 48) as well as proof of MCS 90.

22.1.6 Contractors Pollution Liability Insurance: If specified in Schedule A of the General Conditions, the **Contractor** shall maintain, or cause the **Subcontractor** doing such **Work** to maintain, Contractors Pollution Liability Insurance covering bodily injury and property damage. Such insurance shall provide coverage for actual, alleged or threatened emission, discharge, dispersal, seepage, release or escape of pollutants (including asbestos), including any loss, cost or expense incurred as a result of any cleanup of pollutants (including asbestos) or in the investigation, settlement or defense of any claim, action, or proceedings arising from the operations under this **Contract**. Such insurance shall be in the **Contractor's** name and list the **City** as an Additional Insured and any other entity specified in Schedule A. Coverage shall include, without limitation, (a) loss of use of damaged property or of property that has not been physically injured, (b) transportation, and (c) non-owned disposal sites.

22.1.6(a) Coverage for the **City** as Additional Insured shall specifically include the **City's** officials and employees and be at least as broad as provided to the **Contractor** for this **Project**.

22.1.6(b) If such insurance is written on a claims-made policy, such policy shall have a retroactive date on or before the effective date of this **Contract**, and continuous coverage shall be maintained, or an extended discovery period exercised, for a period of not less than three (3) years from the time the **Work** under this **Contract** is completed.

22.1.7 Marine Insurance:

22.1.7(a) Marine Protection and Indemnity Insurance: If specified in Schedule A of the General Conditions or if the **Contractor** engages in marine operations in the execution of any part of the **Work**, the **Contractor** shall maintain, or cause the **Subcontractor** doing such Work to maintain, Marine Protection and Indemnity Insurance with coverage at least as broad as Form SP-23. The insurance shall provide coverage for the **Contractor** or **Subcontractor** (whichever is doing this **Work**) and for the **City** (together with its officials and employees) and any other entity specified in Schedule A as an Additional Insured for bodily injury and property damage arising from marine operations under this **Contract**. Coverage shall include, without limitation, injury or death of crew members (if not fully provided through other insurance), removal of wreck, damage to piers, wharves and other fixed or floating objects and loss of or damage to any other vessel or craft, or to property on such other vessel or craft.

22.1.7(b) Hull and Machinery Insurance: If specified in Schedule A of the General Conditions or if the **Contractor** engages in marine operations in the execution of any part of the **Work**, the **Contractor** shall maintain, or cause the **Subcontractor** doing such **Work** to maintain, Hull and Machinery Insurance with coverage for the **Contractor** or **Subcontractor** (whichever is doing this Work) and for the **City** (together with its officials and employees) as Additional Insured at least as broad as the latest edition of American Institute Tug Form for all tugs used under this

Contract and Collision Liability at least as broad as the latest edition of American Institute Hull Clauses.

22.1.7(c) Marine Pollution Liability Insurance: If specified in Schedule A of the General Conditions or if the **Contractor** engages in marine operations in the execution of any part of the **Work**, the **Contractor** shall maintain, or cause the **Subcontractor** doing such Work to maintain, Marine Pollution Liability Insurance covering itself (or the Subcontractor doing such Work) as Named Insured and the **City** (together with its officials and employees) and any other entity specified in Schedule A as an Additional Insured. Coverage shall be at least as broad as that provided by the latest edition of Water Quality Insurance Syndicate Form and include, without limitation, liability arising from the discharge or substantial threat of a discharge of oil, or from the release or threatened release of a hazardous substance including injury to, or economic losses resulting from, the destruction of or damage to real property, personal property or natural resources.

22.1.8 The **Contractor** shall provide such other types of insurance, at such minimum limits and with such conditions, as are specified in Schedule A of the General Conditions.

22.2 General Requirements for Insurance Coverage and Policies:

22.2.1 All required insurance policies shall be maintained with companies that may lawfully issue the required policy and have an A.M. Best rating of at least A-/VII or a Standard and Poor's rating of at least A, unless prior written approval is obtained from the **City** Corporation Counsel.

22.2.2 The **Contractor** shall be solely responsible for the payment of all premiums for all required policies and all deductibles and self-insured retentions to which such policies are subject, whether or not the **City** is an insured under the policy.

22.2.3 In his/her sole discretion, the **Commissioner** may, subject to the approval of the **Comptroller** and the **City** Corporation Counsel, accept Letters of Credit and/or custodial accounts in lieu of required insurance.

22.2.4 The **City's** limits of coverage for all types of insurance required pursuant to Schedule A of the General Conditions shall be the greater of (i) the minimum limits set forth in Schedule A or (ii) the limits provided to the **Contractor** as Named Insured under all primary, excess, and umbrella policies of that type of coverage.

22.2.5 The **Contractor** may satisfy its insurance obligations under this Article 22 through primary policies or a combination of primary and excess/umbrella policies, so long as all policies provide the scope of coverage required herein.

22.2.6 Policies of insurance provided pursuant to this Article 22 shall be primary and non-contributing to any insurance or self-insurance maintained by the **City**.

22.3 Proof of Insurance:

22.3.1 For all types of insurance required by Article 22.1 and Schedule A, except for insurance required by Articles 22.1.4 and 22.1.7, the **Contractor** shall file proof of insurance in accordance with this Article 22.3 within ten (10) **Days** of award. For insurance

provided pursuant to Articles 22.1.4 and 22.1.7, proof shall be filed by a date specified by the **Commissioner** or ten (10) **Days** prior to the commencement of the portion of the **Work** covered by such policy, whichever is earlier.

22.3.2 For Workers' Compensation Insurance provided pursuant to Article 22.1.2, the **Contractor** shall submit one of the following forms: C-105.2 Certificate of Workers' Compensation Insurance; U-26.3 - State Insurance Fund Certificate of Workers' Compensation Insurance; Request for WC/DB Exemption (Form CE-200); equivalent or successor forms used by the New York State Workers' Compensation Board; or other proof of insurance in a form acceptable to the **Commissioner**. For Disability Benefits Insurance provided pursuant to Article 22.1.2, the Contractor shall submit DB-120.1 - Certificate Of Insurance Coverage Under The NYS Disability Benefits Law, Request for WC/DB Exemption (Form CE-200); equivalent or successor forms used by the New York State Workers' Compensation Board; or other proof of insurance in a form acceptable to the **Commissioner**. ACORD forms are not acceptable.

22.3.3 For policies provided pursuant to all of Article 22.1 other than Article 22.1.2, the **Contractor** shall submit one or more Certificates of Insurance on forms acceptable to the **Commissioner**. All such Certificates of Insurance shall certify (a) the issuance and effectiveness of such policies of insurance, each with the specified minimum limits (b) for insurance secured pursuant to Article 22.1.1 that the **City** and any other entity specified in Schedule A is an Additional Insured thereunder; (c) in the event insurance is required pursuant to Article 22.1.6 and/or Article 22.1.7, that the City is an Additional Insured thereunder; (d) the company code issued to the insurance company by the National Association of Insurance Commissioners (the NAIC number); and (e) the number assigned to the **Contract** by the **City**. All such Certificates of Insurance shall be accompanied by either a duly executed "Certification by Insurance Broker or Agent" in the form contained in Part III of Schedule A or copies of all policies referenced in such Certificate of Insurance as certified by an authorized representative of the issuing insurance carrier. If any policy is not available at the time of submission, certified binders may be submitted until such time as the policy is available, at which time a certified copy of the policy shall be submitted.

22.3.4 Documentation confirming renewals of insurance shall be submitted to the **Commissioner** prior to the expiration date of coverage of policies required under this **Contract**. Such proofs of insurance shall comply with the requirements of Articles 22.3.2 and 22.3.3.

22.3.5 The **Contractor** shall be obligated to provide the **City** with a copy of any policy of insurance provided pursuant to this Article 22 upon the demand for such policy by the **Commissioner** or the **City** Corporation Counsel.

22.4 Operations of the **Contractor**:

22.4.1 The **Contractor** shall not commence the **Work** unless and until all required certificates have been submitted to and accepted by the **Commissioner**. Acceptance by the **Commissioner** of a certificate does not excuse the **Contractor** from securing insurance consistent with all provisions of this Article 22 or of any liability arising from its failure to do so.

22.4.2 The **Contractor** shall be responsible for providing continuous insurance coverage in the manner, form, and limits required by this **Contract** and shall be authorized to perform **Work** only during the effective period of all required coverage.

22.4.3 In the event that any of the required insurance policies lapse, are revoked, suspended or otherwise terminated, for whatever cause, the **Contractor** shall immediately stop all **Work**, and shall not recommence **Work** until authorized in writing to do so by the **Commissioner**. Upon quitting the **Site**, except as otherwise directed by the **Commissioner**, the **Contractor** shall leave all plant, materials, equipment, tools, and supplies on the **Site**. **Contract** time shall continue to run during such periods and no extensions of time will be granted. The **Commissioner** may also declare the **Contractor** in default for failure to maintain required insurance.

22.4.4 In the event the **Contractor** receives notice, from an insurance company or other person, that any insurance policy required under this Article 22 shall be cancelled or terminated (or has been cancelled or terminated) for any reason, the **Contractor** shall immediately forward a copy of such notice to both the **Commissioner** and the New York City Comptroller, attn: Office of Contract Administration, Municipal Building, One Centre Street, room 1005, New York, New York 10007. Notwithstanding the foregoing, the **Contractor** shall ensure that there is no interruption in any of the insurance coverage required under this Article 22.

22.4.5 Where notice of loss, damage, occurrence, accident, claim or suit is required under an insurance policy maintained in accordance with this Article 22, the **Contractor** shall notify in writing all insurance carriers that issued potentially responsive policies of any such event relating to any operations under this **Contract** (including notice to Commercial General Liability insurance carriers for events relating to the **Contractor**'s own employees) no later than 20 days after such event. For any policy where the **City** is an Additional Insured, such notice shall expressly specify that "this notice is being given on behalf of the City of New York as Insured as well as the Named Insured." Such notice shall also contain the following information: the number of the insurance policy, the name of the named insured, the date and location of the damage, occurrence, or accident, and the identity of the persons or things injured, damaged or lost. The **Contractor** shall simultaneously send a copy of such notice to the City of New York c/o Insurance Claims Specialist, Affirmative Litigation Division, New York City Law Department, 100 Church Street, New York, New York 10007.

22.4.6 In the event of any loss, accident, claim, action, or other event that does or can give rise to a claim under any insurance policy required under this Article 22, the **Contractor** shall at all times fully cooperate with the **City** with regard to such potential or actual claim.

22.5 **Subcontractor** Insurance: In the event the **Contractor** requires any **Subcontractor** to procure insurance with regard to any operations under this **Contract** and requires such **Subcontractor** to name the **Contractor** as an **Additional Insured** thereunder, the **Contractor** shall ensure that the **Subcontractor** name the **City**, including its officials and employees, as an Additional Insured with coverage at least as broad as the most recent edition of ISO Form CG 20 26.

22.6 Wherever reference is made in Article 7 or this Article 22 to documents to be sent to the **Commissioner** (e.g., notices, filings, or submissions), such documents shall be sent to the address set forth in Schedule A of the General Conditions. In the event no address is set forth in Schedule A, such documents are to be sent to the **Commissioner's** address as provided elsewhere in this **Contract**.

22.7 Apart from damages or losses covered by insurance provided pursuant to Articles 22.1.2, 22.1.3, or 22.1.5, the **Contractor** waives all rights against the **City**, including its officials and employees, for any damages or losses that are covered under any insurance required under this Article 22 (whether or

not such insurance is actually procured or claims are paid thereunder) or any other insurance applicable to the operations of the **Contractor** and/or its employees, agents, or **Subcontractors**.

22.8 In the event the **Contractor** utilizes a self-insurance program to satisfy any of the requirements of this Article 22, the **Contractor** shall ensure that any such self-insurance program provides the **City** with all rights that would be provided by traditional insurance under this Article 22, including but not limited to the defense and indemnification obligations that insurers are required to undertake in liability policies.

22.9 Materiality/Non-Waiver: The **Contractor's** failure to secure policies in complete conformity with this Article 22, or to give an insurance company timely notice of any sort required in this **Contract** or to do anything else required by this Article 22 shall constitute a material breach of this **Contract**. Such breach shall not be waived or otherwise excused by any action or inaction by the **City** at any time.

22.10 Pursuant to General Municipal Law Section 108, this **Contract** shall be void and of no effect unless **Contractor** maintains Workers' Compensation Insurance for the term of this **Contract** to the extent required and in compliance with the New York State Workers' Compensation Law.

22.11 Other Remedies: Insurance coverage provided pursuant to this Article 22 or otherwise shall not relieve the **Contractor** of any liability under this **Contract**, nor shall it preclude the **City** from exercising any rights or taking such other actions available to it under any other provisions of this **Contract** or **Law**.

ARTICLE 23. MONEY RETAINED AGAINST CLAIMS

23.1 If any claim shall be made by any person or entity (including **Other Contractors** with the **City** on this **Project**) against the **City** or against the **Contractor** and the **City** for any of the following:

(a) An alleged loss, damage, injury, theft or vandalism of any of the kinds referred to in Articles 7 and 12, plus the reasonable costs of defending the **City**, which in the opinion of the **Comptroller** may not be paid by an insurance company (for any reason whatsoever); or

(b) An infringement of copyrights, patents or use of patented articles, tools, etc., as referred to in Article 57; or

(c) Damage claimed to have been caused directly or indirectly by the failure of the **Contractor** to perform the **Work** in strict accordance with this **Contract,**

the amount of such claim, or so much thereof as the **Comptroller** may deem necessary, may be withheld by the **Comptroller**, as security against such claim, from any money due hereunder. The **Comptroller**, in his/her discretion, may permit the **Contractor** to substitute other satisfactory security in lieu of the monies so withheld.

23.2 If an action on such claim is timely commenced and the liability of the **City**, or the **Contractor**, or both, shall have been established therein by a final judgment of a court of competent jurisdiction, or if such claim shall have been admitted by the **Contractor** to be valid, the **Comptroller** shall pay such judgment or admitted claim out of the monies retained by the **Comptroller** under the provisions of this Article 23, and return the balance, if any, without interest, to the **Contractor**.

ARTICLE 24. MAINTENANCE AND GUARANTY

24.1 The **Contractor** shall promptly repair, replace, restore or rebuild, as the **Commissioner** may determine, any finished **Work** in which defects of materials or workmanship may appear or to which damage may occur because of such defects, during the one (1) year period subsequent to the date of **Substantial Completion** (or use and occupancy in accordance with Article 16), except where other periods of maintenance and guaranty are provided for in Schedule A.

24.2 As security for the faithful performance of its obligations hereunder, the **Contractor**, upon filing its requisition for payment on **Substantial Completion**, shall deposit with the **Commissioner** a sum equal to one (1%) percent of the price (or the amount fixed in Schedule A of the General Conditions) in cash or certified check upon a state or national bank and trust company or a check of such bank and trust company signed by a duly authorized officer thereof and drawn to the order of the **Comptroller**, or obligations of the **City**, which the **Comptroller** may approve as of equal value with the sum so required.

24.3 In lieu of the above, the **Contractor** may make such security payment to the **City** by authorizing the **Commissioner** in writing to deduct the amount from the **Substantial Completion** payment which shall be deemed the deposit required above.

24.4 If the **Contractor** has faithfully performed all of its obligations hereunder the **Commissioner** shall so certify to the **Comptroller** within five (5) **Days** after the expiration of one (1) year from the date of **Substantial Completion** and acceptance of the **Work** or within thirty (30) **Days** after the expiration of the guarantee period fixed in the **Specifications**. The security payment shall be repaid to the **Contractor** without interest within thirty (30) **Days** after certification by the **Commissioner** to the **Comptroller** that the **Contractor** has faithfully performed all of its obligations hereunder.

24.5 Notice by the **Commissioner** to the **Contractor** to repair, replace, rebuild or restore such defective or damaged **Work** shall be timely, pursuant to this article, if given not later than ten (10) **Days** subsequent to the expiration of the one (1) year period or other periods provided for herein.

24.6 If the **Contractor** shall fail to repair, replace, rebuild or restore such defective or damaged **Work** promptly after receiving such notice, the **Commissioner** shall have the right to have the **Work** done by others in the same manner as provided for in the completion of a defaulted **Contract**, under Article 51.

24.7 If the security payment so deposited is insufficient to cover the cost of such **Work**, the **Contractor** shall be liable to pay such deficiency on demand by the **Commissioner**.

24.8 The **Engineer's** certificate setting forth the fair and reasonable cost of repairing, replacing, rebuilding or restoring any damaged or defective **Work** when performed by one other than the **Contractor**, shall be binding and conclusive upon the **Contractor** as to the amount thereof.

24.9 The **Contractor** shall obtain all manufacturers' warranties and guaranties of all equipment and materials required by this **Contract** in the name of the **City** and shall deliver same to the **Commissioner**. All of the **City's** rights and title and interest in and to said manufacturers' warranties and guaranties may be assigned by the **City** to any subsequent purchasers of such equipment and materials or lessees of the premises into which the equipment and materials have been installed.

CHAPTER VI: CHANGES, EXTRA WORK, AND DOCUMENTATION OF CLAIM

ARTICLE 25. CHANGES

25.1 Changes may be made to this **Contract** only as duly authorized in writing by the **Commissioner** in accordance with the **Law** and this **Contract**. All such changes, modifications, and amendments will become a part of the **Contract**. **Work** so ordered shall be performed by the **Contractor**.

25.2 **Contract** changes will be made only for **Work** necessary to complete the **Work** included in the original scope of the **Contract** and/or for non-material changes to the scope of the **Contract**. Changes are not permitted for any material alteration in the scope of **Work** in the **Contract**.

25.3 The **Contractor** shall be entitled to a price adjustment for **Extra Work** performed pursuant to a written change order. Adjustments to price shall be computed in one or more of the following ways:

25.3.1 By applicable unit prices specified in the **Contract**; and/or

25.3.2 By agreement of a fixed price; and/or

25.3.3 By time and material records; and/or

25.3.4 In any other manner approved by the **CCPO**.

25.4 All payments for change orders are subject to pre-audit by the **Engineering Audit Officer** and may be post-audited by the **Comptroller** and/or the **Agency**.

ARTICLE 26. METHODS OF PAYMENT FOR OVERRUNS AND EXTRA WORK

26.1 Overrun of Unit Price Item: An overrun is any quantity of a unit price item which the **Contractor** is directed to provide which is in excess of one hundred twenty-five (125%) percent of the estimated quantity for that item set forth in the bid schedule.

26.1.1For any unit price item, the **Contractor** will be paid at the unit price bid for any quantity up to one hundred twenty-five (125%) percent of the estimated quantity for that item set forth in the bid schedule. If during the progress of the **Work**, the actual quantity of any unit price item required to complete the **Work** approaches the estimated quantity for that item, and for any reason it appears that the actual quantity of any unit price item necessary to complete the **Work** will exceed the estimated quantity for that item by twenty-five (25%) percent, the **Contractor** shall immediately notify the **Engineer** of such anticipated overrun. The **Contractor** shall not be compensated for any quantity of a unit price item provided which is in excess of one hundred twenty-five (125%) percent of the estimated quantity for that item set forth in the bid schedule without written authorization from the **Engineer**.

26.1.2 If the actual quantity of any unit price item necessary to complete the **Work** will exceed one hundred twenty five (125%) percent of the estimated quantity for that item set forth in the bid schedule, the **City** reserves the right and the **Contractor** agrees to negotiate a new unit price for such item. In no event shall such negotiated new unit price exceed the unit bid price. If the **City** and **Contractor** cannot agree on a new unit price, then the **City** shall order the **Contractor** and the **Contractor** agrees to provide additional quantities of

the item on the basis of time and material records for the actual and reasonable cost as determined under Article 26.2, but in no event at a unit price exceeding the unit price bid.

26.2 **Extra Work:** For **Extra Work** where payment is by agreement on a fixed price in accordance with Article 25.3.2, the price to be paid for such **Extra Work** shall be based on the fair and reasonable estimated cost of the items set forth below. For **Extra Work** where payment is based on time and material records in accordance with Article 25.3.3, the price to be paid for such **Extra Work** shall be the actual and reasonable cost of the items set forth below, calculated in accordance with the formula specified therein, if any.

26.2.1 Necessary materials (including transportation to the **Site**); plus

26.2.2 Necessary direct labor, including payroll taxes (subject to statutory wage caps) and supplemental benefits; plus

26.2.3 Sales and personal property taxes, if any, required to be paid on materials not incorporated into such **Extra Work**; plus

26.2.4 Reasonable rental value of **Contractor**-owned (or **Subcontractor**-owned, as applicable), necessary plant and equipment other than **Small Tools**, plus fuel/energy costs. Except for fuel costs for pick-up trucks which shall be reimbursed based on a consumption of five (5) gallons per shift, fuel costs shall be reimbursed based on actual costs or, in the absence of auditable documentation, the following fuel consumption formula per operating hour: (.035) x (HP rating) x (Fuel cost/gallon). Reasonable rental value is defined as the lower of either seventy-five percent of the monthly prorated rental rates established in "The AED Green Book, Rental Rates and Specifications for Construction Equipment" published by Equipment Watch (the "Green Book"), or seventy-five percent of the monthly prorated rental rates established in the "Rental Rate Blue Book for Construction Equipment" published by Equipment Watch (the "Blue Book") (the applicable Blue Book rate being for rental only without the addition of any operational costs listed in the Blue Book). The reasonable rental value is deemed to be inclusive of all operating costs except for fuel/energy consumption and equipment operator's wages/costs. For multiple shift utilization, reimbursement shall be calculated as follows: first shift shall be seventy-five (75%) percent of such rental rates; second shift shall be sixty (60%) percent of the first shift rate; and third shift shall be forty (40%) percent of the first shift rate. Equipment on standby shall be reimbursed at one-third (1/3) the prorated monthly rental rate. **Contractor**-owned (or **Subcontractor**-owned, as applicable) equipment includes equipment from rental companies affiliated with or controlled by the **Contractor** (or **Subcontractor**, as applicable), as determined by the **Commissioner**. In establishing cost reimbursement for non-operating **Contractor**-owned (or **Subcontractor**-owned, as applicable) equipment (scaffolding, sheeting systems, road plates, etc.), the **City** may restrict reimbursement to a purchase-salvage/life cycle basis if less than the computed rental costs; plus

26.2.5 Necessary installation and dismantling of such plant and equipment, including transportation to and from the **Site**, if any, provided that, in the case of non-**Contractor**-owned (or non-**Subcontractor**-owned, as applicable) equipment rented from a third party, the cost of installation and dismantling are not allowable if such costs are included in the rental rate; plus

26.2.6 Necessary fees charged by governmental entities; plus

26.2.7 Necessary construction-related service fees charged by non-governmental entities, such as landfill tipping fees; plus

26.2.8 Reasonable rental costs of non-**Contractor**-owned (or non-**Subcontractor**-owned, as applicable) necessary plant and equipment other than **Small Tools**, plus fuel/energy costs. Except for fuel costs for pick-up trucks which shall be reimbursed based on a consumption of five (5) gallons per shift, fuel costs shall be reimbursed based on actual costs or, in the absence of auditable documentation, the following fuel consumption formula per hour of operation: (.035) x (HP rating) x (Fuel cost/gallon). In lieu of renting, the **City** reserves the right to direct the purchase of non-operating equipment (scaffolding, sheeting systems, road plates, etc.), with payment on a purchase-salvage/life cycle basis, if less than the projected rental costs; plus

26.2.9 Workers' Compensation Insurance, and any insurance coverage expressly required by the **City** for the performance of the **Extra Work** which is different than the types of insurance required by Article 22 and Schedule A of the General Conditions. The cost of Workers' Compensation Insurance is subject to applicable payroll limitation caps and shall be based upon the carrier's Manual Rate for such insurance derived from the applicable class Loss Cost ("LC") and carrier's Lost Cost Multiplier ("LCM") approved by the New York State Department of Financial Services, and with the exception of experience rating, rate modifiers as promulgated by the New York Compensation Insurance Rating Board ("NYCIRB"); plus

26.2.10 Additional costs incurred as a result of the **Extra Work** for performance and payment bonds; plus

26.2.11 Twelve percent (12%) percent of the total of items in Articles 26.2.1 through 26.2.5 as compensation for overhead, except that no percentage for overhead will be allowed on **Payroll Taxes** or on the premium portion of overtime pay or on sales and personal property taxes. Overhead shall include without limitation, all costs and expenses in connection with administration, management superintendence, small tools, and insurance required by Schedule A of the General Conditions other than Workers' Compensation Insurance; plus

26.2.12 Ten (10%) percent of the total of items in Articles 26.2.1 through 26.2.5, plus the items in Article 26.2.11, as compensation for profit, except that no percentage for profit will be allowed on **Payroll Taxes** or on the premium portion of overtime pay or on sales and personal property taxes; plus

26.2.13 Five (5%) percent of the total of items in Articles 26.2.6 through 26.2.10 as compensation for overhead and profit.

26.3 Where the **Extra Work** is performed in whole or in part by other than the **Contractor's** own forces pursuant to Article 26.2, the **Contractor** shall be paid, subject to pre-audit by the **Engineering Audit Officer**, the cost of such **Work** computed in accordance with Article 26.2 above, plus an additional allowance of five (5%) percent to cover the **Contractor's** overhead and profit.

26.4 Where a change is ordered, involving both **Extra Work** and omitted or reduced **Contract Work,** the **Contract** price shall be adjusted, subject to pre-audit by the **EAO**, in an amount based on the difference between the cost of such **Extra Work** and of the omitted or reduced **Work**.

26.5 Where the **Contractor** and the **Commissioner** can agree upon a fixed price for **Extra Work** in accordance with Article 25.3.2 or another method of payment for **Extra Work** in accordance with

Article 25.3.4, or for **Extra Work** ordered in connection with omitted **Work**, such method, subject to pre-audit by the **EAO**, may, at the option of the **Commissioner**, be substituted for the cost plus a percentage method provided in Article 26.2; provided, however, that if the **Extra Work** is performed by a **Subcontractor**, the **Contractor** shall not be entitled to receive more than an additional allowance of five (5%) percent for overhead and profit over the cost of such **Subcontractor's Work** as computed in accordance with Article 26.2.

ARTICLE 27. RESOLUTION OF DISPUTES

27.1 All disputes between the **City** and the **Contractor** of the kind delineated in this Article 27.1 that arise under, or by virtue of, this **Contract** shall be finally resolved in accordance with the provisions of this Article 27 and the **PPB** Rules. This procedure for resolving all disputes of the kind delineated herein shall be the exclusive means of resolving any such disputes.

27.1.1 This Article 27 shall not apply to disputes concerning matters dealt with in other sections of the **PPB** Rules, or to disputes involving patents, copyrights, trademarks, or trade secrets (as interpreted by the courts of New York State) relating to proprietary rights in computer software.

27.1.2 This Article 27 shall apply only to disputes about the scope of **Work** delineated by the **Contract**, the interpretation of **Contract** documents, the amount to be paid for **Extra Work** or disputed work performed in connection with the **Contract**, the conformity of the **Contractor's Work** to the **Contract**, and the acceptability and quality of the **Contractor's Work**; such disputes arise when the **Engineer**, **Resident Engineer**, **Engineering Audit Officer**, or other designee of the **Commissioner** makes a determination with which the **Contractor** disagrees.

27.2 All determinations required by this Article 27 shall be made in writing clearly stated, with a reasoned explanation for the determination based on the information and evidence presented to the party making the determination. Failure to make such determination within the time required by this Article 27 shall be deemed a non-determination without prejudice that will allow application to the next level.

27.3 During such time as any dispute is being presented, heard, and considered pursuant to this Article 27, the **Contract** terms shall remain in force and the **Contractor** shall continue to perform **Work** as directed by the **ACCO** or the **Engineer**. Failure of the **Contractor** to continue **Work** as directed shall constitute a waiver by the **Contractor** of its claim.

27.4 Presentation of Disputes to **Commissioner**.

Notice of Dispute and Agency Response. The **Contractor** shall present its dispute in writing ("Notice of Dispute") to the **Commissioner** within thirty (30) Days of receiving written notice of the determination or action that is the subject of the dispute. This notice requirement shall not be read to replace any other notice requirements contained in the **Contract**. The Notice of Dispute shall include all the facts, evidence, documents, or other basis upon which the **Contractor** relies in support of its position, as well as a detailed computation demonstrating how any amount of money claimed by the **Contractor** in the dispute was arrived at. Within thirty (30) Days after receipt of the detailed written submission comprising the complete Notice of Dispute, the **Engineer**, **Resident Engineer**, **Engineering Audit Officer**, or other designee of the **Commissioner** shall submit to the **Commissioner** all materials he or she deems pertinent to the dispute. Following initial submissions to the **Commissioner**, either party may demand of the other the production of any document or other material the demanding party believes may be relevant to the dispute. The requested party shall produce all relevant materials that are not otherwise

protected by a legal privilege recognized by the courts of New York State. Any question of relevancy shall be determined by the **Commissioner** whose decision shall be final. Willful failure of the **Contractor** to produce any requested material whose relevancy the **Contractor** has not disputed, or whose relevancy has been affirmatively determined, shall constitute a waiver by the **Contractor** of its claim.

27.4.1 **Commissioner** Inquiry. The **Commissioner** shall examine the material and may, in his or her discretion, convene an informal conference with the **Contractor**, the **ACCO**, and the **Engineer**, **Resident Engineer**, **Engineering Audit Officer**, or other designee of the **Commissioner** to resolve the issue by mutual consent prior to reaching a determination. The **Commissioner** may seek such technical or other expertise as he or she shall deem appropriate, including the use of neutral mediators, and require any such additional material from either or both parties as he or she deems fit. The **Commissioner's** ability to render, and the effect of, a decision hereunder shall not be impaired by any negotiations in connection with the dispute presented, whether or not the **Commissioner** participated therein. The **Commissioner** may or, at the request of any party to the dispute, shall compel the participation of any **Other Contractor** with a contract related to the **Work** of this **Contract**, and that **Contractor** shall be bound by the decision of the **Commissioner**. Any **Other Contractor** thus brought into the dispute resolution proceeding shall have the same rights and obligations under this Article 27 as the **Contractor** initiating the dispute.

27.4.2 **Commissioner** Determination. Within thirty (30) **Days** after the receipt of all materials and information, or such longer time as may be agreed to by the parties, the **Commissioner** shall make his or her determination and shall deliver or send a copy of such determination to the **Contractor**, the **ACCO**, and **Engineer**, **Resident Engineer**, **Engineering Audit Officer**, or other designee of the **Commissioner**, as applicable, together with a statement concerning how the decision may be appealed.

27.4.3 Finality of **Commissioner's** Decision. The **Commissioner's** decision shall be final and binding on all parties, unless presented to the Contract Dispute Resolution Board pursuant to this Article 27. The **City** may not take a petition to the Contract Dispute Resolution Board. However, should the **Contractor** take such a petition, the **City** may seek, and the Contract Dispute Resolution Board may render, a determination less favorable to the **Contractor** and more favorable to the **City** than the decision of the **Commissioner**.

27.5 Presentation of Dispute to the **Comptroller**. Before any dispute may be brought by the **Contractor** to the Contract Dispute Resolution Board, the **Contractor** must first present its claim to the **Comptroller** for his or her review, investigation, and possible adjustment.

27.5.1 Time, Form, and Content of Notice. Within thirty (30) **Days** of its receipt of a decision by the **Commissioner**, the **Contractor** shall submit to the **Comptroller** and to the **Commissioner** a Notice of Claim regarding its dispute with the **Agency**. The Notice of Claim shall consist of (i) a brief written statement of the substance of the dispute, the amount of money, if any, claimed and the reason(s) the **Contractor** contends the dispute was wrongly decided by the **Commissioner**; (ii) a copy of the written decision of the **Commissioner**; and (iii) a copy of all materials submitted by the **Contractor** to the **Agency**, including the Notice of Dispute. The **Contractor** may not present to the **Comptroller** any material not presented to the **Commissioner**, except at the request of the **Comptroller**.

27.5.2 Response. Within thirty (30) **Days** of receipt of the Notice of Claim, the **Agency** shall make available to the **Comptroller** a copy of all material submitted by the **Agency** to the **Commissioner** in connection with the dispute. The **Agency** may not present to the **Comptroller** any material not presented to the **Commissioner** except at the request of the **Comptroller**.

27.5.3 **Comptroller** Investigation. The **Comptroller** may investigate the claim in dispute and, in the course of such investigation, may exercise all powers provided in Sections 7-201 and 7-203 of the Administrative Code. In addition, the **Comptroller** may demand of either party, and such party shall provide, whatever additional material the **Comptroller** deems pertinent to the claim, including original business records of the **Contractor**. Willful failure of the **Contractor** to produce within fifteen (15) **Days** any material requested by the **Comptroller** shall constitute a waiver by the **Contractor** of its claim. The **Comptroller** may also schedule an informal conference to be attended by the **Contractor**, **Agency** representatives, and any other personnel desired by the **Comptroller**.

27.5.4 Opportunity of **Comptroller** to Compromise or Adjust Claim. The **Comptroller** shall have forty-five (45) **Days** from his or her receipt of all materials referred to in Article 27.5.3 to investigate the disputed claim. The period for investigation and compromise may be further extended by agreement between the **Contractor** and the **Comptroller**, to a maximum of ninety (90) **Days** from the **Comptroller's** receipt of all materials. The **Contractor** may not present its petition to the Contract Dispute Resolution Board until the period for investigation and compromise delineated in this Article 27.5.4 has expired. In compromising or adjusting any claim hereunder, the **Comptroller** may not revise or disregard the terms of the **Contract** between the parties.

27.6 Contract Dispute Resolution Board. There shall be a Contract Dispute Resolution Board composed of:

27.6.1 The chief administrative law judge of the Office of Administrative Trials and Hearings (OATH) or his/her designated OATH administrative law judge, who shall act as chairperson, and may adopt operational procedures and issue such orders consistent with this Article 27 as may be necessary in the execution of the Contract Dispute Resolution Board's functions, including, but not limited to, granting extensions of time to present or respond to submissions;

27.6.2 The **CCPO** or his/her designee; any designee shall have the requisite background to consider and resolve the merits of the dispute and shall not have participated personally and substantially in the particular matter that is the subject of the dispute or report to anyone who so participated; and

27.6.3 A person with appropriate expertise who is not an employee of the **City**. This person shall be selected by the presiding administrative law judge from a prequalified panel of individuals, established and administered by OATH with appropriate background to act as decision-makers in a dispute. Such individual may not have a contract or dispute with the **City** or be an officer or employee of any company or organization that does, or regularly represents persons, companies, or organizations having disputes with the **City**.

27.7 Petition to the Contract Dispute Resolution Board. In the event the claim has not been settled or adjusted by the **Comptroller** within the period provided in this Article 27, the **Contractor**,

within thirty (30) **Days** thereafter, may petition the Contract Dispute Resolution Board to review the **Commissioner's** determination.

27.7.1 Form and Content of Petition by **Contractor**. The **Contractor** shall present its dispute to the Contract Dispute Resolution Board in the form of a petition, which shall include (i) a brief written statement of the substance of the dispute, the amount of money, if any, claimed, and the reason(s) the **Contractor** contends the dispute was wrongly decided by the **Commissioner**; (ii) a copy of the written Decision of the **Commissioner,** (iii) copies of all materials submitted by the **Contractor** to the Agency; (iv) a copy of the written decision of the **Comptroller**, if any, and (v) copies of all correspondence with, or written material submitted by the **Contractor**, to the **Comptroller**. The **Contractor** shall concurrently submit four (4) complete sets of the Petition: one set to the **City** Corporation Counsel (Attn: Commercial and Real Estate Litigation Division) and three (3) sets to the Contract Dispute Resolution Board at OATH's offices with proof of service on the **City** Corporation Counsel. In addition, the **Contractor** shall submit a copy of the written statement of the substance of the dispute, cited in (i) above, to both the **Commissioner** and the **Comptroller**.

27.7.2 **Agency** Response. Within thirty (30) **Days** of its receipt of the Petition by the **City** Corporation Counsel, the **Agency** shall respond to the brief written statement of the **Contractor** and make available to the Contract Dispute Resolution Board all material it submitted to the **Commissioner** and **Comptroller**. Three (3) complete copies of the **Agency** response shall be provided to the Contract Dispute Resolution Board and one to the **Contractor**. Extensions of time for submittal of the **Agency** response shall be given as necessary upon a showing of good cause or, upon consent of the parties, for an initial period of up to thirty (30) Days.

27.7.3 Further Proceedings. The Contract Dispute Resolution Board shall permit the **Contractor** to present its case by submission of memoranda, briefs, and oral argument. The Contract Dispute Resolution Board shall also permit the **Agency** to present its case in response to the **Contractor** by submission of memoranda, briefs, and oral argument. If requested by the **City** Corporation Counsel, the **Comptroller** shall provide reasonable assistance in the preparation of the **Agency's** case. Neither the **Contractor** nor the **Agency** may support its case with any documentation or other material that was not considered by the **Comptroller**, unless requested by the Contract Dispute Resolution Board. The Contract Dispute Resolution Board, in its discretion, may seek such technical or other expert advice as it shall deem appropriate and may seek, on its own or upon application of a party, any such additional material from any party as it deems fit. The Contract Dispute Resolution Board, in its discretion, may combine more than one dispute between the parties for concurrent resolution.

27.7.4 Contract Dispute Resolution Board Determination. Within forty-five (45) **Days** of the conclusion of all written submissions and oral arguments, the Contract Dispute Resolution Board shall render a written decision resolving the dispute. In an unusually complex case, the Contract Dispute Resolution Board may render its decision in a longer period, not to exceed ninety (90) **Days**, and shall so advise the parties at the commencement of this period. The Contract Dispute Resolution Board's decision must be consistent with the terms of the **Contract**. Decisions of the Contract Dispute Resolution Board shall only resolve matters before the Contract Dispute Resolution Board and shall not have precedential effect with respect to matters not before the Contract Dispute Resolution Board.

27.7.5 Notification of Contract Dispute Resolution Board Decision. The Contract Dispute Resolution Board shall send a copy of its decision to the **Contractor**, the **ACCO**, the Engineer, the **Comptroller**, the **City** Corporation Counsel, the CCPO, and the **PPB**. A decision in favor of the **Contractor** shall be subject to the prompt payment provisions of the **PPB** Rules. The Required Payment Date shall be thirty (30) Days after the date the parties are formally notified of the Contract Dispute Resolution Board's decision.

27.7.6 Finality of Contract Dispute Resolution Board Decision. The Contract Dispute Resolution Board's decision shall be final and binding on all parties. Any party may seek review of the Contract Dispute Resolution Board's decision solely in the form of a challenge, filed within four (4) months of the date of the Contract Dispute Resolution Board's decision, in a court of competent jurisdiction of the State of New York, County of New York pursuant to Article 78 of the Civil Practice Law and Rules. Such review by the court shall be limited to the question of whether or not the Contract Dispute Resolution Board's decision was made in violation of lawful procedure, was affected by an error of **Law**, or was arbitrary and capricious or an abuse of discretion. No evidence or information shall be introduced or relied upon in such proceeding that was not presented to the Contract Dispute Resolution Board in accordance with this Article 27.

27.8 Any termination, cancellation, or alleged breach of the **Contract** prior to or during the pendency of any proceedings pursuant to this Article 27 shall not affect or impair the ability of the **Commissioner** or Contract Dispute Resolution Board to make a binding and final decision pursuant to this Article 27.

ARTICLE 28. RECORD KEEPING FOR EXTRA OR DISPUTED WORK OR WORK ON A TIME & MATERIALS BASIS

28.1 While the **Contractor** or any of its **Subcontractors** is performing **Work** on a time and material basis or **Extra Work** on a time and material basis ordered by the **Commissioner** under Article 25, or where the **Contractor** believes that it or any of its **Subcontractors** is performing **Extra Work** but a final determination by **Agency** has not been made, or the **Contractor** or any of its **Subcontractors** is performing disputed **Work** (whether on or off the **Site**), or complying with a determination or order under protest in accordance with Articles 11, 27, and 30, in each such case the **Contractor** shall furnish the **Resident Engineer** daily with three (3) copies of written statements signed by the **Contractor's** representative at the **Site** showing:

28.1.1 The name, trade, and number of each worker employed on such **Work** or engaged in complying with such determination or order, the number of hours employed, and the character of the **Work** each is doing; and

28.1.2 The nature and quantity of any materials, plant and equipment furnished or used in connection with the performance of such **Work** or compliance with such determination or order, and from whom purchased or rented.

28.2 A copy of such statement will be countersigned by the **Resident Engineer**, noting thereon any items not agreed to or questioned, and will be returned to the **Contractor** within two (2) **Days** after submission.

28.3 The **Contractor** and its **Subcontractors**, when required by the **Commissioner**, or the **Comptroller**, shall also produce for inspection, at the office of the **Contractor** or **Subcontractor**, any and all of its books, bid documents, financial statements, vouchers, records, daily job diaries and reports,

and cancelled checks, and any other documents relating to showing the nature and quantity of the labor, materials, plant and equipment actually used in the performance of such **Work**, or in complying with such determination or order, and the amounts expended therefor, and shall permit the **Commissioner** and the **Comptroller** to make such extracts therefrom, or copies thereof, as they or either of them may desire.

28.4 In connection with the examination provided for herein, the **Commissioner**, upon demand therefor, will produce for inspection by the **Contractor** such records as the **Agency** may have with respect to such **Extra Work** or disputed **Work** performed under protest pursuant to order of the **Commissioner**, except those records and reports which may have been prepared for the purpose of determining the accuracy and validity of the **Contractor's** claim.

28.5 Failure to comply strictly with these requirements shall constitute a waiver of any claim for extra compensation or damages on account of the performance of such **Work** or compliance with such determination or order.

ARTICLE 29. OMITTED WORK

29.1 If any **Contract Work** in a lump sum **Contract**, or if any part of a lump sum item in a unit price, lump sum, or percentage-bid **Contract** is omitted by the **Commissioner** pursuant to Article 33, the **Contract** price, subject to audit by the EAO, shall be reduced by a pro rata portion of the lump sum bid amount based upon the percent of **Work** omitted subject to Article 29.4. For the purpose of determining the pro rata portion of the lump sum bid amount, the bid breakdown submitted in accordance with Article 41 shall be considered, but shall not be the determining factor.

29.2 If the whole of a lump sum item or units of any other item is so omitted by the **Commissioner** in a unit price, lump sum, or percentage-bid **Contract**, then no payment will be made therefor except as provided in Article 29.4.

29.3 For units that have been ordered but are only partially completed, the unit price shall be reduced by a pro rata portion of the unit price bid based upon the percentage of **Work** omitted subject to Article 29.4.

29.4 In the event the **Contractor**, with respect to any omitted **Work**, has purchased any non-cancelable material and/or equipment that is not capable of use except in the performance of this **Contract** and has been specifically fabricated for the sole purpose of this **Contract**, but not yet incorporated into the **Work**, the **Contractor** shall be paid for such material and/or equipment in accordance with Article 64.2.1(b); provided, however, such payment is contingent upon the **Contractor's** delivery of such material and/or equipment in acceptable condition to a location designated by the **City**.

29.5 The **Contractor** agrees to make no claim for damages or for loss of overhead and profit with regard to any omitted **Work**.

ARTICLE 30. NOTICE AND DOCUMENTATION OF COSTS AND DAMAGES; PRODUCTION OF FINANCIAL RECORDS

30.1 If the **Contractor** shall claim to be sustaining damages by reason of any act or omission of the **City** or its agents, it shall submit to the **Commissioner** within forty-five (45) **Days** from the time such damages are first incurred, and every thirty (30) **Days** thereafter to the extent additional damages are being incurred for the same condition, verified statements of the details and the amounts of such

damages, together with documentary evidence of such damages. The **Contractor** may submit any of the above statements within such additional time as may be granted by the **Commissioner** in writing upon written request therefor. Failure of the **Commissioner** to respond in writing to a written request for additional time within thirty (30) **Days** shall be deemed a denial of the request. On failure of the **Contractor** to strictly comply with the foregoing provisions, such claims shall be deemed waived and no right to recover on such claims shall exist. Damages that the **Contractor** may claim in any action or dispute resolution procedure arising under or by reason of this **Contract** shall not be different from or in excess of the statements and documentation made pursuant to this Article 30. This Article 30.1 does not apply to claims submitted to the **Commissioner** pursuant to Article 11 or to claims disputing a determination under Article 27.

30.2 In addition to the foregoing statements, the **Contractor** shall, upon notice from the **Commissioner**, produce for examination at the **Contractor's** office, by the **Engineer**, **Architect** or **Project Manager**, all of its books of account, bills, invoices, payrolls, subcontracts, time books, daily reports, bank deposit books, bank statements, check books, and cancelled checks, showing all of its acts and transactions in connection with or relating to or arising by reason of this **Contract**, and submit itself and persons in its employment, for examination under oath by any person designated by the **Commissioner** or **Comptroller** to investigate claims made or disputes against the **City** under this **Contract**. At such examination, a duly authorized representative of the **Contractor** may be present.

30.3 In addition to the statements required under Article 28 and this Article 30, the **Contractor** and/or its **Subcontractor** shall, within thirty (30) **Days** upon notice from the **Commissioner** or **Comptroller**, produce for examination at the **Contractor's** and/or **Subcontractor's** office, by a representative of either the **Commissioner** or **Comptroller**, all of its books of account, bid documents, financial statements, accountant workpapers, bills, invoices, payrolls, subcontracts, time books, daily reports, bank deposit books, bank statements, check books, and cancelled checks, showing all of its acts and transactions in connection with or relating to or arising by reason of this **Contract**. Further, the **Contractor** and/or its **Subcontractor** shall submit any person in its employment, for examination under oath by any person designated by the **Commissioner** or **Comptroller** to investigate claims made or disputes against the **City** under this **Contract**. At such examination, a duly authorized representative of the **Contractor** may be present.

30.4 Unless the information and examination required under Article 30.3 is provided by the **Contractor** and/or its **Subcontractor** upon thirty (30) **Days'** notice from the **Commissioner** or **Comptroller**, or upon the **Commissioner's** or **Comptroller's** written authorization to extend the time to comply, the **City** shall be released from all claims arising under, relating to or by reason of this **Contract**, except for sums certified by the **Commissioner** to be due under the provisions of this **Contract**. It is further stipulated and agreed that no person has the power to waive any of the foregoing provisions and that in any action or dispute resolution procedure against the **City** to recover any sum in excess of the sums certified by the **Commissioner** to be due under or by reason of this **Contract**, the **Contractor** must allege in its complaint and prove, at trial or during such dispute resolution procedure, compliance with the provisions of this Article 30.

30.5 In addition, after the commencement of any action or dispute resolution procedure by the **Contractor** arising under or by reason of this **Contract**, the **City** shall have the right to require the **Contractor** to produce for examination under oath, up until the trial of the action or hearing before the Contract Dispute Resolution Board, the books and documents described in Article 30.3 and submit itself and all persons in its employ for examination under oath. If this Article 30 is not complied with as required, then the **Contractor** hereby consents to the dismissal of the action or dispute resolution procedure.

CHAPTER VII: POWERS OF THE RESIDENT ENGINEER,THE ENGINEER OR ARCHITECT AND THE COMMISSIONER

ARTICLE 31. THE RESIDENT ENGINEER

31.1 The **Resident Engineer** shall have the power to inspect, supervise, and control the performance of the **Work**, subject to review by the **Commissioner**. The **Resident Engineer** shall not, however, have the power to issue an **Extra Work** order, except as specifically designated in writing by the **Commissioner**.

ARTICLE 32. THE ENGINEER OR ARCHITECT OR PROJECT MANAGER

32.1 The **Engineer** or **Architect** or **Project Manager**, in addition to those matters elsewhere herein delegated to the **Engineer** and expressly made subject to his/her determination, direction or approval, shall have the power, subject to review by the **Commissioner**:

32.1.1 To determine the amount, quality, and location of the **Work** to be paid for hereunder; and

32.1.2 To determine all questions in relation to the **Work**, to interpret the **Contract Drawings**, **Specifications**, and **Addenda**, and to resolve all patent inconsistencies or ambiguities therein; and

32.1.3 To determine how the **Work** of this **Contract** shall be coordinated with **Work** of **Other Contractors** engaged simultaneously on this **Project**, including the power to suspend any part of the **Work**, but not the whole thereof; and

32.1.4 To make minor changes in the **Work** as he/she deems necessary, provided such changes do not result in a net change in the cost to the **City** or to the **Contractor** of the **Work** to be done under the **Contract**; and

32.1.5 To amplify the **Contract Drawings**, add explanatory information and furnish additional **Specifications** and drawings, consistent with this **Contract**.

32.2 The foregoing enumeration shall not imply any limitation upon the power of the **Engineer** or **Architect** or **Project Manager**, for it is the intent of this **Contract** that all of the **Work** shall generally be subject to his/her determination, direction, and approval, except where the determination, direction or approval of someone other than the **Engineer** or **Architect** or **Project Manager** is expressly called for herein.

32.3 The **Engineer** or **Architect** or **Project Manager** shall not, however, have the power to issue an **Extra Work** order, except as specifically designated in writing by the **Commissioner**.

ARTICLE 33. THE COMMISSIONER

33.1 The **Commissioner**, in addition to those matters elsewhere herein expressly made subject to his/her determination, direction or approval, shall have the power:

33.1.1 To review and make determinations on any and all questions in relation to this **Contract** and its performance; and

33.1.2 To modify or change this **Contract** so as to require the performance of **Extra Work** (subject, however, to the limitations specified in Article 25) or the omission of **Contract Work**; and

33.1.3 To suspend the whole or any part of the **Work** whenever in his/her judgment such suspension is required:

33.1.3(a) In the interest of the **City** generally; or

33.1.3(b) To coordinate the **Work** of the various contractors engaged on this **Project** pursuant to the provisions of Article 12; or

33.1.3(c) To expedite the completion of the entire **Project** even though the completion of this particular **Contract** may thereby be delayed.

ARTICLE 34. NO ESTOPPEL

34.1 Neither the **City** nor any **Agency**, official, agent or employee thereof, shall be bound, precluded or estopped by any determination, decision, approval, order, letter, payment or certificate made or given under or in connection with this **Contract** by the **City**, the **Commissioner**, the **Engineer**, the **Resident Engineer**, or any other official, agent or employee of the **City**, either before or after the final completion and acceptance of the **Work** and payment therefor:

34.1.1 From showing the true and correct classification, amount, quality or character of the **Work** actually done; or that any such determination, decision, order, letter, payment or certificate was untrue, incorrect or improperly made in any particular, or that the **Work**, or any part thereof, does not in fact conform to the requirements of this **Contract**; and

34.1.2 From demanding and recovering from the **Contractor** any overpayment made to it, or such damages as the **City** may sustain by reason of the **Contractor's** failure to perform each and every part of its **Contract**.

CHAPTER VIII: LABOR PROVISIONS

ARTICLE 35. EMPLOYEES

35.1 The **Contractor** and its **Subcontractors** shall not employ on the **Work**:

35.1.1 Anyone who is not competent, faithful and skilled in the **Work** for which he/she shall be employed; and whenever the **Commissioner** shall inform the **Contractor**, in writing, that any employee is, in his/her opinion, incompetent, unfaithful or disobedient, that employee shall be discharged from the **Work** forthwith, and shall not again be employed upon it; or

35.1.2 Any labor, materials or means whose employment, or utilization during the course of this **Contract**, may tend to or in any way cause or result in strikes, work stoppages, delays, suspension of **Work** or similar troubles by workers employed by the **Contractor** or its **Subcontractors**, or by any of the trades working in or about the buildings and premises where **Work** is being performed under this **Contract**, or by **Other Contractors** or their **Subcontractors** pursuant to other contracts, or on any other building or premises owned or operated by the **City**, its **Agencies**, departments, boards or authorities. Any violation by the **Contractor** of this requirement may, upon certification of the **Commissioner**, be considered as proper and sufficient cause for declaring the **Contractor** to be in default, and for the **City** to take action against it as set forth in Chapter X of this **Contract**, or such other article of this **Contract** as the Commissioner may deem proper; or

35.1.3 In accordance with Section 220.3-e of the Labor Law of the State of New York (hereinafter "Labor Law"), the **Contractor** and its **Subcontractors** shall not employ on the **Work** any apprentice, unless he/she is a registered individual, under a bona fide program registered with the New York State Department of Labor. The allowable ratio of apprentices to journey-level workers in any craft classification shall not be greater than the ratio permitted to the **Contractor** as to its work force on any job under the registered program. Any employee listed on a payroll at an apprentice wage rate, who is not registered as above, shall be paid the wage rate determined by the **Comptroller** of the **City** for the classification of **Work** actually performed. The **Contractor** or **Subcontractor** will be required to furnish written evidence of the registration of its program and apprentices as well as all the appropriate ratios and wage rates, for the area of the construction prior to using any apprentices on the **Contract Work**.

35.2 If the total cost of the **Work** under this **Contract** is at least two hundred fifty thousand ($250,000) dollars, all laborers, workers, and mechanics employed in the performance of the **Contract** on the public work site, either by the **Contractor**, **Subcontractor** or other person doing or contracting to do the whole or a part of the **Work** contemplated by the **Contract**, shall be certified prior to performing any **Work** as having successfully completed a course in construction safety and health approved by the United States Department of Labor's Occupational Safety and Health Administration that is at least ten (10) hours in duration.

35.3 In accordance with Local Law Nos. 30-2012 and 33-2012, codified at sections 6-132 and 12-113 of the Administrative Code, respectively,

35.3.1 The **Contractor** shall not take an adverse personnel action with respect to an officer or employee in retaliation for such officer or employee making a report of information concerning conduct which such officer or employee knows or reasonably believes to involve corruption, criminal activity, conflict of interest, gross mismanagement or abuse of authority by any officer or employee relating to this **Contract** to (a) the Commissioner of the Department of Investigation, (b) a member of the New York City Council, the Public Advocate, or the **Comptroller**, or (c) the **CCPO**, **ACCO**, **Agency** head, or **Commissioner**.

35.3.2 If any of the **Contractor**'s officers or employees believes that he or she has been the subject of an adverse personnel action in violation of Article 35.3.1, he or she shall be entitled to bring a cause of action against the **Contractor** to recover all relief necessary to make him or her whole. Such relief may include but is not limited to: (a) an injunction to restrain continued retaliation, (b) reinstatement to the position such employee would have had but for the retaliation or to an equivalent position, (c) reinstatement of full fringe benefits and seniority rights, (d) payment of two times back

pay, plus interest, and (e) compensation for any special damages sustained as a result of the retaliation, including litigation costs and reasonable attorney's fees.

35.3.3 The **Contractor** shall post a notice provided by the **City** in a prominent and accessible place on any site where work pursuant to the **Contract** is performed that contains information about:

35.3.3(a) how its employees can report to the New York City Department of Investigation allegations of fraud, false claims, criminality or corruption arising out of or in connection with the **Contract**; and

35.3.3(b) the rights and remedies afforded to its employees under Administrative Code sections 7-805 (the New York City False Claims Act) and 12-113 (the Whistleblower Protection Expansion Act) for lawful acts taken in connection with the reporting of allegations of fraud, false claims, criminality or corruption in connection with the **Contract**.

35.3.4 For the purposes of this Article 35.3, "adverse personnel action" includes dismissal, demotion, suspension, disciplinary action, negative performance evaluation, any action resulting in loss of staff, office space, equipment or other benefit, failure to appoint, failure to promote, or any transfer or assignment or failure to transfer or assign against the wishes of the affected officer or employee.

35.3.5 This Article 35.3 is applicable to all of the **Contractor**'s **Subcontractors** having subcontracts with a value in excess of $100,000; accordingly, the **Contractor** shall include this rider in all subcontracts with a value a value in excess of $100,000.

35.4 Article 35.3 is not applicable to this **Contract** if it is valued at $100,000 or less. Articles 35.3.1, 35.3.2, 35.3.4, and 35.3.5 are not applicable to this **Contract** if it was solicited pursuant to a finding of an emergency.

35.5 Paid Sick Leave Law.

35.5.1 Introduction and General Provisions.

35.5.1(a) The Earned Sick Time Act, also known as the Paid Sick Leave Law ("PSLL"), requires covered employees who annually perform more than 80 hours of work in New York City to be provided with paid sick time.[2] Contractors of the **City** or of other governmental entities may be required to provide sick time pursuant to the PSLL.

35.5.1(b) The PSLL became effective on April 1, 2014, and is codified at Title 20, Chapter 8, of the New York City Administrative Code. It is administered by the City's Department of Consumer Affairs ("DCA"); DCA's rules promulgated under the PSLL are codified at Chapter 7 of Title 6 of the Rules of the City of New York ("Rules").

[2] Pursuant to the PSLL, if fewer than five employees work for the same employer, as determined pursuant to New York City Administrative Code § 20-912(g), such employer has the option of providing such employees uncompensated sick time.

35.5.1(c) The **Contractor** agrees to comply in all respects with the PSLL and the Rules, and as amended, if applicable, in the performance of this **Contract**. The **Contractor** further acknowledges that such compliance is a material term of this **Contract** and that failure to comply with the PSLL in performance of this **Contract** may result in its termination.

35.5.1(d) The **Contractor** must notify the **Agency Chief Contracting Officer** of the **Agency** with whom it is contracting in writing within ten (10) days of receipt of a complaint (whether oral or written) regarding the PSLL involving the performance of this **Contract**. Additionally, the **Contractor** must cooperate with DCA's education efforts and must comply with DCA's subpoenas and other document demands as set forth in the PSLL and Rules.

35.5.1(e) The PSLL is summarized below for the convenience of the **Contractor**. The **Contractor** is advised to review the PSLL and Rules in their entirety. On the website www.nyc.gov/PaidSickLeave there are links to the PSLL and the associated Rules as well as additional resources for employers, such as Frequently Asked Questions, timekeeping tools and model forms, and an event calendar of upcoming presentations and webinars at which the **Contractor** can get more information about how to comply with the PSLL. The **Contractor** acknowledges that it is responsible for compliance with the PSLL notwithstanding any inconsistent language contained herein.

35.5.2 Pursuant to the PSLL and the Rules: Applicability, Accrual, and Use.

35.5.2(a) An employee who works within the City of New York for more than eighty hours in any consecutive 12-month period designated by the employer as its "calendar year" pursuant to the PSLL ("Year") must be provided sick time. Employers must provide a minimum of one hour of sick time for every 30 hours worked by an employee and compensation for such sick time must be provided at the greater of the employee's regular hourly rate or the minimum wage. Employers are not required to provide more than 40 hours of sick time to an employee in any Year.

35.5.2(b) An employee has the right to determine how much sick time he or she will use, provided that employers may set a reasonable minimum increment for the use of sick time not to exceed four hours per **Day**. In addition, an employee may carry over up to 40 hours of unused sick time to the following Year, provided that no employer is required to allow the use of more than forty hours of sick time in a Year or carry over unused paid sick time if the employee is paid for such unused sick time and the employer provides the employee with at least the legally required amount of paid sick time for such employee for the immediately subsequent Year on the first **Day** of such Year.

35.5.2(c) An employee entitled to sick time pursuant to the PSLL may use sick time for any of the following:

i. such employee's mental illness, physical illness, injury, or health condition or the care of such illness, injury, or condition or such employee's need for medical diagnosis or preventive medical care;
ii. such employee's care of a family member (an employee's child, spouse, domestic partner, parent, sibling, grandchild or grandparent, or the child or parent of an employee's spouse or domestic partner) who has a mental

illness, physical illness, injury or health condition or who has a need for medical diagnosis or preventive medical care;

iii. closure of such employee's place of business by order of a public official due to a public health emergency; or

iv. such employee's need to care for a child whose school or childcare provider has been closed due to a public health emergency.

35.5.2(d) An employer must not require an employee, as a condition of taking sick time, to search for a replacement. However, an employer may require an employee to provide: reasonable notice of the need to use sick time; reasonable documentation that the use of sick time was needed for a reason above if for an absence of more than three consecutive work days; and/or written confirmation that an employee used sick time pursuant to the PSLL. However, an employer may not require documentation specifying the nature of a medical condition or otherwise require disclosure of the details of a medical condition as a condition of providing sick time and health information obtained solely due to an employee's use of sick time pursuant to the PSLL must be treated by the employer as confidential.

35.5.2(e) If an employer chooses to impose any permissible discretionary requirement as a condition of using sick time, it must provide to all employees a written policy containing those requirements, using a delivery method that reasonably ensures that employees receive the policy. If such employer has not provided its written policy, it may not deny sick time to an employee because of non-compliance with such a policy.

35.5.2(f) Sick time to which an employee is entitled must be paid no later than the payday for the next regular payroll period beginning after the sick time was used.

35.5.3 Exemptions and Exceptions. Notwithstanding the above, the PSLL does not apply to any of the following:

35.5.3(a) an independent contractor who does not meet the definition of employee under section 190(2) of the New York State Labor Law;

35.5.3(b) an employee covered by a valid collective bargaining agreement in effect on April 1, 2014, until the termination of such agreement;

35.5.3(c) an employee in the construction or grocery industry covered by a valid collective bargaining agreement if the provisions of the PSLL are expressly waived in such collective bargaining agreement;

35.5.3(d) an employee covered by another valid collective bargaining agreement if such provisions are expressly waived in such agreement and such agreement provides a benefit comparable to that provided by the PSLL for such employee;

35.5.3(e) an audiologist, occupational therapist, physical therapist, or speech language pathologist who is licensed by the New York State Department of Education and who calls in for work assignments at will, determines his or her own schedule, has the ability to reject or accept any assignment referred to him or her, and is paid an average hourly wage that is at least four times the federal minimum wage;

35.5.3(f) an employee in a work study program under Section 2753 of Chapter 42 of the United States Code;

35.5.3(g) an employee whose work is compensated by a qualified scholarship program as that term is defined in the Internal Revenue Code, Section 117 of Chapter 20 of the United States Code; or

35.5.3(h) a participant in a Work Experience Program (WEP) under section 336-c of the New York State Social Services Law.

35.5.4 Retaliation Prohibited. An employer may not threaten or engage in retaliation against an employee for exercising or attempting in good faith to exercise any right provided by the PSLL. In addition, an employer may not interfere with any investigation, proceeding, or hearing pursuant to the PSLL.

35.5.5 Notice of Rights.

35.5.5(a) An employer must provide its employees with written notice of their rights pursuant to the PSLL. Such notice must be in English and the primary language spoken by an employee, provided that DCA has made available a translation into such language. Downloadable notices are available on DCA's website at http://www.nyc.gov/html/dca/html/law/PaidSickLeave.shtml.

35.5.5(b) Any person or entity that willfully violates these notice requirements is subject to a civil penalty in an amount not to exceed fifty dollars for each employee who was not given appropriate notice.

35.5.6 Records. An employer must retain records documenting its compliance with the PSLL for a period of at least three years, and must allow DCA to access such records in furtherance of an investigation related to an alleged violation of the PSLL.

35.5.7 Enforcement and Penalties.

35.5.7(a) Upon receiving a complaint alleging a violation of the PSLL, DCA has the right to investigate such complaint and attempt to resolve it through mediation. Within 30 **Days** of written notification of a complaint by DCA, or sooner in certain circumstances, the employer must provide DCA with a written response and such other information as DCA may request. If DCA believes that a violation of the PSLL has occurred, it has the right to issue a notice of violation to the employer.

35.5.7(b) DCA has the power to grant an employee or former employee all appropriate relief as set forth in New York City Administrative Code § 20-924(d). Such relief may include, among other remedies, treble damages for the wages that should have been paid, damages for unlawful retaliation, and damages and reinstatement for unlawful discharge. In addition, DCA may impose on an employer found to have violated the PSLL civil penalties not to exceed $500 for a first violation, $750 for a second violation within two years of the first violation, and $1,000 for each succeeding violation within two years of the previous violation.

35.5.8 More Generous Polices and Other Legal Requirements. Nothing in the PSLL is intended to discourage, prohibit, diminish, or impair the adoption or retention of a more generous sick time policy, or the obligation of an employer to comply with any contract,

collective bargaining agreement, employment benefit plan or other agreement providing more generous sick time. The PSLL provides minimum requirements pertaining to sick time and does not preempt, limit or otherwise affect the applicability of any other law, regulation, rule, requirement, policy or standard that provides for greater accrual or use by employees of sick leave or time, whether paid or unpaid, or that extends other protections to employees. The PSLL may not be construed as creating or imposing any requirement in conflict with any federal or state law, rule or regulation.

35.6 HireNYC: Hiring and Reporting Requirements. This Article 35.6 applies to construction contracts of $1,000,000 or more. The **Contractor** shall comply with the requirements of Articles 35.6.1-35.6.5 for all non-trades jobs (e.g., for an administrative position arising out of **Work** ant located in New York City). The **Contractor** shall reasonably cooperate with SBS and the **City** on specific outreach events, including "Hire-on-the-Spot" events, for the hiring of trades workers in connection with the **Work**. If provided elsewhere in this **Contract**, this **Contract** is subject to a project labor agreement.

35.6.1 Enrollment. The **Contractor** shall enroll with the HireNYC system, found at www.nyc.gov/sbs, within thirty (30) days after the registration of this **Contract** pursuant to Section 328 of the New York City Charter. The **Contractor** shall provide information about the business, designate a primary contact and say whether it intends to hire for any entry to mid-level job opportunities arising from this **Contract** and located in New York City, and, if so, the approximate start date of the first hire.

35.6.2 Job Posting Requirements.

35.6.2(a) Once enrolled in HireNYC, the **Contractor** agrees to update the HireNYC portal with all entry to mid-level job opportunities arising from this **Contract** and located in New York City, if any, which shall be defined as jobs requiring no more than an associate degree, as provided by the New York State Department of Labor (see Column F of https://labor.ny.gov/stats/2012-2022- NYS-Employment-Prospects.xls). The information to be updated includes the types of entry and mid-level positions made available from the work arising from the **Contract** and located in New York City, the number of positions, the anticipated schedule of initiating the hiring process for these positions, and the contact information for the **Contractor's** representative charged with overseeing hiring. The **Contractor** must update the HireNYC portal with any hiring needs arising from the contract and located in New York City, and the requirements of the jobs to be filled, no less than three weeks prior to the intended first day of employment for each new position, except with the permission of SBS, not to be unreasonably withheld, and must also update the HireNYC portal as set forth below.

35.6.2(b) After enrollment through HireNYC and submission of relevant information, SBS will work with the **Contractor** to develop a recruitment plan which will outline the candidate screening process, and will provide clear instructions as to when, where, and how interviews will take place. HireNYC will screen applicants based on employer requirements and refer applicants whom it believes are qualified to the **Contractor** for interviews. The **Contractor** must interview referred applicants whom it believes are qualified.

35.6.2(c) After completing an interview of a candidate referred by HireNYC, the **Contractor** must provide feedback via the portal within twenty (20) business days to indicate which candidates were interviewed and hired, if any. In addition, the **Contractor** shall provide the start date of new hires, and additional information

reasonably related to such hires, within twenty (20) business days after the start date. In the event the **Contractor** does not have any job openings covered by this Rider in any given year, the **Contractor** shall be required to provide an annual update to HireNYC to that effect. For this purpose, the reporting year shall run from the date of the registration of the **Contract** pursuant to Charter section 328 and each anniversary date.

35.6.2(d) These requirements do not limit the **Contractor's** ability to assess the qualifications of prospective workers, and to make final hiring and retention decisions. No provision of this Article 35.6 shall be interpreted so as to require the **Contractor** to employ any particular worker.

35.6.2(e) In addition, the provisions of this Article 35.6 shall not apply to positions that the **Contractor** intends to fill with employees employed pursuant to the job retention provision of Section 22-505 of the Administrative Code of the City of New York. The **Contractor** shall not be required to report such openings with HireNYC. However, the **Contractor** shall enroll with the HireNYC system pursuant to Article 35.6.1, above, and, if such positions subsequently become open, then the remaining provisions of this Article 35.6 will apply.

35.6.3 Breach and Liquidated Damages. If the **Contractor** fails to comply with the terms of the **ContrSact** and this Article 35.6 (l) by not enrolling its business with HireNYC; (2) by not informing HireNYC, as required, of open positions; or (3) by failing to interview a qualified candidate, the **Agency** may assess liquidated damages in the amount of two-thousand five hundred dollars ($2,500) per breach. For all other events of noncompliance with the terms of this Article 35.6, the **Agency** may assess liquidated damages in the amount of five hundred dollars ($500) per breach. Furthermore, in the event the **Contractor** breaches the requirements of this Article 35.6 during the term of the **Contract**, the **City** may hold the **Contractor** in default of this **Contract**.

35.6.4 Audit Compliance. In addition to the auditing requirements set forth in other parts of the **Contract**, the **Contractor** shall permit SBS and the **City** to inspect any and all records concerning or relating to job openings or the hiring of individuals for work arising from the **Contract** and located in New York City. The **Contractor** shall permit an inspection within seven (7) business days of the request.

35.6.5 Other Reporting Requirements. The **Contractor** shall report to the **City**, on a monthly basis, all information reasonably requested by the **City** that is necessary for the **City** to comply with any reporting requirements imposed by **Law**, including any requirement that the **City** maintain a publicly accessible database. In addition, the **Contractor** agrees to comply with all reporting requirements imposed by **Law**, or as otherwise requested by the **City**.

35.6.6 Federal Hiring Requirements. If this **Contract** is federally funded (as indicated elsewhere in this Contract), the **Contractor** shall comply with all federal hiring requirements as may be set forth in this **Contract**, including, as applicable: (a) Section 3 of the HUD Act of 1968, which requires, to the greatest extent feasible, economic opportunities for 30 percent of new hires be given to low- and very low-income persons, particularly persons who are recipients of HUD assistance for housing and Executive Order 11246, which prohibits discrimination in employment due to race, color, religion, sex or national origin, and requires the implementation of goals for minority and female participation for work involving any construction trade.

ARTICLE 36. NO DISCRIMINATION

36.1 The **Contractor** specifically agrees, as required by Labor Law Section 220-e, as amended, that:

36.1.1 In the hiring of employees for the performance of **Work** under this **Contract** or any subcontract hereunder, neither the **Contractor**, **Subcontractor**, nor any person acting on behalf of such **Contractor** or **Subcontractor**, shall by reason of race, creed, color or national origin discriminate against any citizen of the State of New York who is qualified and available to perform the **Work** to which the employment relates;

36.1.2 Neither the **Contractor**, **Subcontractor**, nor any person on its behalf shall, in any manner, discriminate against or intimidate any employee hired for the performance of **Work** under this **Contract** on account of race, creed, color or national origin;

36.1.3 There may be deducted from the amount payable to the **Contractor** by the **City** under this **Contract** a penalty of fifty ($50.00) dollars for each person for each **Day** during which such person was discriminated against or intimidated in violation of the provisions of this **Contract**; and

36.1.4 This **Contract** may be cancelled or terminated by the **City** and all moneys due or to become due hereunder may be forfeited, for a second or any subsequent violation of the terms or conditions of this Article 36.

36.1.5 This Article 36 covers all construction, alteration and repair of any public building or public work occurring in the State of New York and the manufacture, sale, and distribution of materials, equipment, and supplies to the extent that such operations are performed within the State of New York pursuant to this **Contract**.

36.2 The **Contractor** specifically agrees, as required by Section 6-108 of the Administrative Code, as amended, that:

36.2.1 It shall be unlawful for any person engaged in the construction, alteration or repair of buildings or engaged in the construction or repair of streets or highways pursuant to a **Contract** with the **City** or engaged in the manufacture, sale or distribution of materials, equipment or supplies pursuant to a **Contract** with the **City** to refuse to employ or to refuse to continue in any employment any person on account of the race, color or creed of such person.

36.2.2 It shall be unlawful for any person or any servant, agent or employee of any person, described in Article 36.1.2, to ask, indicate or transmit, orally or in writing, directly or indirectly, the race, color or creed or religious affiliation of any person employed or seeking employment from such person, firm or corporation.

36.2.3 Breach of the foregoing provisions shall be deemed a violation of a material provision of this **Contract**.

36.2.4 Any person, or the employee, manager or owner of or officer of such firm or corporation who shall violate any of the provisions of this Article 36.2 shall, upon

conviction thereof, be punished by a fine of not more than one hundred ($100.00) dollars or by imprisonment for not more than thirty (30) **Days**, or both.

36.3 This **Contract** is subject to the requirements of Executive Order No. 50 (1980) ("E.O. 50"), as revised, and the rules and regulations promulgated thereunder. No contract will be awarded unless and until these requirements have been complied with in their entirety. By signing this **Contract**, the **Contractor** agrees that it:

36.3.1 Will not engage in any unlawful discrimination against any employee or applicant for employment because of race, creed, color, national origin, sex, age, disability, marital status or sexual orientation with respect to all employment decisions including, but not limited to, recruitment, hiring, upgrading, demotion, downgrading, transfer, training, rates of pay or other forms of compensation, layoff, termination, and all other terms and conditions of employment; and

36.3.2 Will not engage in any unlawful discrimination in the selection of **Subcontractors** on the basis of the owner's race, color, creed, national origin, sex, age, disability, marital status or sexual orientation; and

36.3.3 Will state in all solicitations or advertisements for employees placed by or on behalf of the **Contractor** that all qualified applicants will receive consideration for employment without unlawful discrimination based on race, creed, color, national origin, sex, age, citizens status, disability, marital status, sexual orientation, or that it is an equal employment opportunity employer; and

36.3.4 Will send to each labor organization or representative of workers with which it has a collective bargaining agreement or other contract or memorandum of understanding, written notification of its equal employment opportunity commitments under E.O. 50 and the rules and regulations promulgated thereunder; and

36.3.5 Will furnish, before the award of the **Contract**, all information and reports, including an employment report, that are required by E.O. 50, the rules and regulations promulgated thereunder, and orders of the **City** Department of Business Services, Division of Labor Services (**DLS**) and will permit access to its books, records, and accounts by the **DLS** for the purposes of investigation to ascertain compliance with such rules, regulations, and orders.

36.4 The **Contractor** understands that in the event of its noncompliance with the nondiscrimination clauses of this **Contract** or with any of such rules, regulations, or orders, such noncompliance shall constitute a material breach of this **Contract** and noncompliance with E.O. 50 and the rules and regulations promulgated thereunder. After a hearing held pursuant to the rules of the **DLS**, the Director of the **DLS** may direct the **Commissioner** to impose any or all of the following sanctions:

36.4.1 Disapproval of the **Contractor**; and/or

36.4.2 Suspension or termination of the **Contract**; and/or

36.4.3 Declaring the **Contractor** in default; and/or

36.4.4 In lieu of any of the foregoing sanctions, the Director of the **DLS** may impose an employment program.

In addition to any actions taken under this **Contract**, failure to comply with E.O. 50 and the rules and regulations promulgated thereunder, in one or more instances, may result in a **City Agency** declaring the **Contractor** to be non-responsible in future procurements. The **Contractor** further agrees that it will refrain from entering into any **Contract** or **Contract** modification subject to E.O. 50 and the rules and regulations promulgated thereunder with a **Subcontractor** who is not in compliance with the requirements of E.O. 50 and the rules and regulations promulgated thereunder.

36.5 The **Contractor** specifically agrees, as required by Section 6-123 of the Administrative Code, that:

36.5.1 The **Contractor** will not engage in any unlawful discriminatory practice in violation of Title 8 of the Administrative Code; and

36.5.2 Any failure to comply with this Article 36.5 may subject the **Contractor** to the remedies set forth in Section 6-123 of the Administrative Code, including, where appropriate, sanctions such as withholding of payment, imposition of an employment program, finding the **Contractor** to be in default, cancellation of the **Contract**, or any other sanction or remedy provided by **Law** or **Contract**.

ARTICLE 37. LABOR LAW REQUIREMENTS

37.1 The **Contractor** shall strictly comply with all applicable provisions of the Labor Law, as amended. Such compliance is a material term of this **Contract**.

37.2 The **Contractor** specifically agrees, as required by Labor Law Sections 220 and 220-d, as amended, that:

37.2.1 Hours of **Work**: No laborer, worker, or mechanic in the employ of the **Contractor**, **Subcontractor** or other person doing or contracting to do the whole or a part of the **Work** contemplated by this **Contract** shall be permitted or required to work more than eight (8) hours in any one (1) **Day**, or more than five (5) **Days** in any one (1) week, except as provided in the Labor Law and in cases of extraordinary emergency including fire, flood, or danger to life or property, or in the case of national emergency when so proclaimed by the President of the United States of America.

37.2.2 In situations in which there are not sufficient laborers, workers, and mechanics who may be employed to carry on expeditiously the **Work** contemplated by this **Contract** as a result of such restrictions upon the number of hours and **Days** of labor, and the immediate commencement or prosecution or completion without undue delay of the **Work** is necessary for the preservation of the **Site** and/or for the protection of the life and limb of the persons using the same, such laborers, workers, and mechanics shall be permitted or required to work more than eight (8) hours in any one (1) **Day**; or five (5) **Days** in any one (1) week; provided, however, that upon application of any **Contractor**, the **Commissioner** shall have first certified to the Commissioner of Labor of the State of New York (hereinafter "Commissioner of Labor") that such public **Work** is of an important nature and that a delay in carrying it to completion would result in serious disadvantage to the public; and provided, further, that such Commissioner of Labor shall have determined that such an emergency does in fact exist as provided in Labor Law Section 220.2.

37.2.3 Failure of the **Commissioner** to make such a certification to the Commissioner of Labor shall not entitle the **Contractor** to damages for delay or for any cause whatsoever.

37.2.4 Prevailing Rate of Wages: The wages to be paid for a legal day's **Work** to laborers, workers, or mechanics employed upon the **Work** contemplated by this **Contract** or upon any materials to be used thereon shall not be less than the "prevailing rate of wage" as defined in Labor Law Section 220, and as fixed by the **Comptroller** in the attached Schedule of Wage Rates and in updated schedules thereof. The prevailing wage rates and supplemental benefits to be paid are those in effect at the time the **Work** is being performed.

37.2.5 Requests for interpretation or correction in the Information for Bidders includes all requests for clarification of the classification of trades to be employed in the performance of the **Work** under this **Contract**. In the event that a trade not listed in the **Contract** is in fact employed during the performance of this **Contract**, the **Contractor** shall be required to obtain from the **Agency** the prevailing wage rates and supplementary benefits for the trades used and to complete the performance of this **Contract** at the price at which the **Contract** was awarded.

37.2.6 Minimum Wages: Except for employees whose wage is required to be fixed pursuant to Labor Law Section 220, all persons employed by the **Contractor** and any **Subcontractor** in the manufacture or furnishing of the supplies, materials, or equipment, or the furnishing of work, labor, or services, used in the performance of this **Contract**, shall be paid, without subsequent deduction or rebate unless expressly authorized by **Law**, not less than the sum mandated by **Law**.

37.3 Working Conditions: No part of the **Work**, labor or services shall be performed or rendered by the **Contractor** in any plants, factories, buildings or surroundings or under working conditions which are unsanitary or hazardous or dangerous to the health and safety of employees engaged in the performance of this **Contract**. Compliance with the safety, sanitary, and factory inspection **Laws** of the state in which the **Work** is to be performed shall be prima facie evidence of compliance with this Article 37.3.

37.4 Prevailing Wage Enforcement: The **Contractor** agrees to pay for all costs incurred by the **City** in enforcing prevailing wage requirements, including the cost of any investigation conducted by or on behalf of the **Agency** or the **Comptroller,** where the **City** discovers a failure to comply with any of the requirements of this Article 37 by the **Contractor** or its **Subcontractor(s)**. The **Contractor** also agrees that, should it fail or refuse to pay for any such investigation, the **Agency** is hereby authorized to deduct from a **Contractor's** account an amount equal to the cost of such investigation.

37.4.1 The Labor Law Section 220 and Section 220-d, as amended, provide that this **Contract** shall be forfeited and no sum paid for any **Work** done hereunder on a second conviction for willfully paying less than:

37.4.1(a) The stipulated prevailing wage scale as provided in Labor Law section 220, as amended, or

37.4.1(b) The stipulated minimum hourly wage scale as provided in Labor Law section 220-d, as amended.

37.4.2 For any breach or violation of either working conditions (Article 37.3) or minimum wages (Article 37.2.6) provisions, the party responsible therefor shall be liable to the **City** for liquidated damages, which may be withheld from any amounts due on any contracts with the **City** of such party responsible, or may be recovered in actions brought by the **City**

Corporation Counsel in the name of the **City**, in addition to damages for any other breach of this **Contract**, for a sum equal to the amount of any underpayment of wages due to any employee engaged in the performance of this **Contract**. In addition, the **Commissioner** shall have the right to cancel contracts and enter into other contracts for the completion of the original contract, with or without public letting, and the original **Contractor** shall be liable for any additional cost. All sums withheld or recovered as deductions, rebates, refunds, or underpayment of wages hereunder, shall be held in a special deposit account and shall be paid without interest, on order of the **Comptroller**, directly to the employees who have been paid less than minimum rates of pay as set forth herein and on whose account such sums were withheld or recovered, provided that no claims by employees for such payments shall be entertained unless made within two (2) years from the date of actual notice to the **Contractor** of the withholding or recovery of such sums by the **City**.

37.4.3 A determination by the **Comptroller** that a **Contractor** and/or its **Subcontractor** willfully violated Labor Law Section 220 will be forwarded to the **City's** five District Attorneys for review.

37.4.4 The **Contractor's** or **Subcontractor's** noncompliance with this Article 37.4 and Labor Law Section 220 may result in an unsatisfactory performance evaluation and the **Comptroller** may also find and determine that the **Contractor** or **Subcontractor** willfully violated the New York Labor **Law**.

37.4.4(a) An unsatisfactory performance evaluation for noncompliance with this Article 37.4 may result in a determination that the **Contractor** is a non-responsible bidder on subsequent procurements with the **City** and thus a rejection of a future award of a contract with the **City**, as well as any other sanctions provided for by **Law**.

37.4.4(b) Labor Law Section 220-b, as amended, provides that when two (2) final determinations have been rendered against a **Contractor** or **Subcontractor** within any consecutive six (6) year period determining that such **Contractor** or **Subcontractor** has willfully failed to pay the prevailing rate of wages or to provide supplements in accordance with the Labor Law and this Article 37.4, whether such failures were concurrent or consecutive and whether or not such final determinations concerning separate public works projects are rendered simultaneously, such **Contractor** or **Subcontractor** shall be ineligible to submit a bid on or be awarded any public works contract with the **City** for a period of five (5) years from the second final determination. If the final determination involves the falsification of payroll records or the kickback of wages or supplements, the **Contractor** or **Subcontractor** shall be ineligible to submit a bid on or be awarded any public works contract with the **City** for a period of five (5) years from the first final determination.

37.4.4(c) Labor Law Section 220, as amended, provides that the **Contractor** or **Subcontractor** found to have violated this Article 37.4 may be directed to make payment of wages or supplements including interest found to be due, and the **Contractor** or **Subcontractor** may be directed to make payment of a further sum as a civil penalty in an amount not exceeding twenty-five (25%) percent of the total amount found to be due.

37.5 The **Contractor** and its **Subcontractors** shall within ten (10) **Days** after mailing of a Notice of Award or written order, post in prominent and conspicuous places in each and every plant, factory, building, and structure where employees of the **Contractor** and its **Subcontractors** engaged in the

performance of this **Contract** are employed, notices furnished by the **City**, in relation to prevailing wages and supplements, minimum wages, and other stipulations contained in Sections 220 and 220-h of the Labor Law, and the **Contractor** and its **Subcontractors** shall continue to keep such notices posted in such prominent and conspicuous places until **Final Acceptance** of the supplies, materials, equipment, or **Work**, labor, or services required to be furnished or rendered under this **Contract**.

37.6 The **Contractor** shall strictly comply with all of the provisions of Articles 37.6.1 through 37.6.5, and provide for all workers, laborers or mechanics in its employ, the following:

37.6.1 Notices Posted At **Site**: Post, in a location designated by the **City**, schedules of prevailing wages and supplements for this **Project**, a copy of all re-determinations of such schedules for the **Project**, the Workers' Compensation **Law** Section 51 notice, all other notices required by **Law** to be posted at the **Site**, the **City** notice that this **Project** is a public works project on which each worker is entitled to receive the prevailing wages and supplements for the occupation at which he or she is working, and all other notices which the **City** directs the **Contractor** to post. The **Contractor** shall provide a surface for such notices which is satisfactory to the **City**. The **Contractor** shall maintain and keep current such notices in a legible manner and shall replace any notice or schedule which is damaged, defaced, illegible or removed for any reason. The **Contractor** shall post such notices before commencing any **Work** on the **Site** and shall maintain such notices until all **Work** on the **Site** is complete; and

37.6.2 Daily **Site** Sign-in Sheets: Maintain daily **Site** sign-in sheets, and require that **Subcontractors** maintain daily **Site** sign-in sheets for its employees, which include blank spaces for an employee's name to be both printed and signed, job title, date started and Social Security number, the time the employee began work and the time the employee left work, until **Final Acceptance** of the supplies, materials, equipment, or **Work**, labor, or services to be furnished or rendered under this **Contract** unless exception is granted by the **Comptroller** upon application by the **Agency**. In the alternative, subject to the approval of the **CCPO**, the **Contractor** and **Subcontractor** may maintain an electronic or biometric sign-in system, which provides the information required by this Article 37.6.2; and

37.6.3 Individual Employee Information Notices: Distribute a notice to each worker, laborer or mechanic employed under this **Contract**, in a form provided by the **Agency**, that this **Project** is a public works project on which each worker, laborer or mechanic is entitled to receive the prevailing rate of wages and supplements for the occupation at which he or she is working. If the total cost of the **Work** under this **Contract** is at least two hundred fifty thousand ($250,000) dollars, such notice shall also include a statement that each worker, laborer or mechanic must be certified prior to performing any **Work** as having successfully completed a course in construction safety and health approved by the United States Department of Labor's Occupational Safety and Health Administration that is at least ten (10) hours in duration. Such notice shall be distributed to each worker before he or she starts performing any **Work** of this **Contract** and with the first paycheck after July first of each year. "Worker, laborer or mechanic" includes employees of the **Contractor** and all **Subcontractors** and all employees of suppliers entering the **Site**. At the time of distribution, the **Contractor** shall have each worker, laborer or mechanic sign a statement, in a form provided by the **Agency**, certifying that the worker has received the notice required by this Article 37.6.3, which signed statement shall be maintained with the payroll records required by this **Contract**; and

37.6.3(a) The **Contractor** and each **Subcontractor** shall notify each worker, laborer or mechanic employed under this **Contract** in writing of the prevailing rate of

wages for their particular job classification. Such notification shall be given to every worker, laborer, and mechanic on their first pay stub and with every pay stub thereafter; and

37.6.4 **Site** Laminated Identification Badges: The **Contractor** shall provide laminated identification badges which include a photograph of the worker's, laborer's or mechanic's face and indicate the worker's, laborer's or mechanic's name, trade, employer's name, and employment starting date (month/day/year). Further, the **Contractor** shall require as a condition of employment on the **Site**, that each and every worker, laborer or mechanic wear the laminated identification badge at all times and that it may be seen by any representative of the **City**. The **Commissioner** may grant a written waiver from the requirement that the laminated identification badge include a photograph if the **Contractor** demonstrates that the identity of an individual wearing a laminated identification badge can be easily verified by another method; and

37.6.5 Language Other Than English Used On **Site**: Provide the **ACCO** notice when three (3) or more employees (worker and/or laborer and/or mechanic) on the **Site**, at any time, speak a language other than English. The **ACCO** will then provide the **Contractor** the notices described in Article 37.6.1 in that language or languages as may be required. The **Contractor** is responsible for all distributions under this Article 37; and

37.6.6 Provision of Records: The **Contractor** and **Subcontractor(s)** shall produce within five (5) **Days** on the **Site** of the **Work** and upon a written order of the **Engineer**, the **Commissioner**, the **ACCO**, the **Agency EAO**, or the **Comptroller,** such records as are required to be kept by this Article 37.6; and

37.6.7 The **Contractor** and **Subcontractor(s)** shall pay employees by check or direct deposit. If this **Contract** is for an amount greater than one million ($1,000,000) dollars, checks issued by the **Contractor** to covered employees shall be generated by a payroll service or automated payroll system (an in-house system may be used if approved by the **Agency**). For any subcontract for an amount greater than seven hundred fifty thousand ($750,000) dollars, checks issued by a **Subcontractor** to covered employees shall be generated by a payroll service or automated payroll system (an in-house system may be used if approved by the **Agency**); and

37.6.8 The failure of the **Contractor** or **Subcontractor(s)** to comply with the provisions of Articles 37.6.1 through 37.6.7 may result in the **Commissioner** declaring the **Contractor** in default and/or the withholding of payments otherwise due under the **Contract**.

37.7 The **Contractor** and its **Subcontractors** shall keep such employment and payroll records as are required by Section 220 of the Labor Law. The failure of the **Contractor** or **Subcontractor(s)** to comply with the provisions of this Article 37.7 may result in the **Commissioner** declaring the **Contractor** in default and/or the withholding of payments otherwise due under the **Contract.**

37.8 At the time the **Contractor** makes application for each partial payment and for final payment, the **Contractor** shall submit to the **Commissioner** a written payroll certification, in the form provided by this **Contract**, of compliance with the prevailing wage, minimum wage, and other provisions and stipulations required by Labor Law Section 220 and of compliance with the training requirements of Labor Law Section 220-h set forth in Article 35.2. This certification of compliance shall be a condition precedent to payment and no payment shall be made to the **Contractor** unless and until each such certification shall have been submitted to and received by the **Commissioner**.

37.9 This **Contract** is executed by the **Contractor** with the express warranty and representation that the **Contractor** is not disqualified under the provisions of Section 220 of the Labor Law from the award of the **Contract**.

37.10 Any breach or violation of any of the foregoing shall be deemed a breach or violation of a material provision of this **Contract**, and grounds for cancellation thereof by the **City**.

ARTICLE 38. PAYROLL REPORTS

38.1 The **Contractor** and its **Subcontractor(s)** shall maintain on the **Site** during the performance of the **Work** the original payrolls or transcripts thereof which the **Contractor** and its **Subcontractor(s)** are required to maintain and shall submit such original payrolls or transcripts, subscribed and affirmed by it as true, within thirty (30) **Days** after issuance of its first payroll, and every thirty (30) **Days** thereafter, pursuant to Labor Law Section 220(3-a)(a)(iii). The **Contractor** and **Subcontractor(s)** shall submit such original payrolls or transcripts along with each and every payment requisition. If payment requisitions are not submitted at least once a month, the **Contractor** and its **Subcontractor(s)** shall submit original payrolls and transcripts both along with its payment requisitions and independently of its payment requisitions.

38.2 The **Contractor** shall maintain payrolls or transcripts thereof for six (6) years from the date of completion of the **Work** on this **Contract**. If such payrolls and transcripts are maintained outside of New York City after the completion of the **Work** and their production is required pursuant to this Article 38, the **Contractor** shall produce such records in New York City upon request by the City.

38.3 The **Contractor** and **Subcontractor(s)** shall comply with any written order, direction, or request made by the **Engineer**, the **Commissioner**, the **ACCO**, the **Agency EAO**, the **Agency Labor Law Investigator(s)**, or the **Comptroller**, to provide to the requesting party any of the following information and/or records within five (5) **Days** of such written order, direction, or request:

38.3.1 Such original payrolls or transcripts thereof subscribed and affirmed by it as true and the statements signed by each worker pursuant to this Chapter VIII; and/or

38.3.2 Attendance sheets for each **Day** on which any employee of the **Contractor** and/or any of the **Subcontractor(s)** performed **Work** on the **Site**, which attendance sheet shall be in a form acceptable to the **Agency** and shall provide information acceptable to the **Agency** to identify each such employee; and/or

38.3.3 Any other information to satisfy the **Engineer**, the **Commissioner**, the **ACCO**, the **Agency EAO**, the **Agency Labor Law Investigator(s)** or the **Comptroller**, that this Chapter VIII and the Labor Law, as to the hours of employment and prevailing rates of wages and/or supplemental benefits, are being observed.

38.4 The failure of the **Contractor** or **Subcontractor(s)** to comply with the provisions of Articles 38.1 and/or 38.2 may result in the **Commissioner** declaring the **Contractor** in default and/or the withholding of payments otherwise due under the **Contract**.

ARTICLE 39. DUST HAZARDS

39.1 Should a harmful dust hazard be created in performing the **Work** of this **Contract**, for the elimination of which appliances or methods have been approved by the Board of Standards and Appeals

of the City of New York, such appliances and methods shall be installed, maintained, and effectively operated during the continuance of such harmful dust hazard. Failure to comply with this provision after notice shall make this **Contract** voidable at the sole discretion of the **City**.

CHAPTER IX: PARTIAL AND FINAL PAYMENTS

ARTICLE 40. CONTRACT PRICE

40.1 The **City** shall pay, and the **Contractor** agrees to accept, in full consideration for the **Contractor's** performance of the **Work** subject to the terms and conditions hereof, the lump sum price or unit prices for which this **Contract** was awarded, plus the amount required to be paid for any **Extra Work** ordered by the **Commissioner** under Article 25, less credit for any **Work** omitted pursuant to Article 29.

ARTICLE 41. BID BREAKDOWN ON LUMP SUM

41.1 Within fifteen (15) **Days** after the commencement date specified in the **Notice to Proceed** or **Order to Work**, unless otherwise directed by the **Resident Engineer**, the **Contractor** shall submit to the **Resident Engineer** a breakdown of its bid price, or of lump sums bid for items of the **Contract**, showing the various operations to be performed under the **Contract**, as directed in the progress schedule required under Article 9, and the value of each of such operations, the total of such items to equal the lump sum price bid. Said breakdown must be approved in writing by the **Resident Engineer**.

41.2 No partial payment will be approved until the **Contractor** submits a bid breakdown that is acceptable to the **Resident Engineer**.

41.3 The **Contractor** shall also submit such other information relating to the bid breakdown as directed by the **Resident Engineer**. Thereafter, the breakdown may be used only for checking the **Contractor's** applications for partial payments hereunder, but shall not be binding upon the **City**, the **Commissioner**, or the **Engineer** for any purpose whatsoever.

ARTICLE 42. PARTIAL PAYMENTS

42.1 From time to time as the **Work** progresses satisfactorily, but not more often than once each calendar month (except where the **Commissioner** approves in writing the submission of invoices on a more frequent basis and for invoices relating to **Work** performed pursuant to a change order), the **Contractor** may submit to the **Engineer** a requisition for a partial payment in the prescribed form, which shall contain an estimate of the quantity and the fair value of the **Work** done during the payment period.

42.2 Partial payments may be made for materials, fixtures, and equipment in advance of their actual incorporation in the **Work**, as the **Commissioner** may approve, and upon the terms and conditions set forth in the General Conditions.

42.3 The **Contractor** shall also submit to the **Commissioner** in connection with every application for partial payment a verified statement in the form prescribed by the **Comptroller** setting forth the information required under Labor Law Section 220-a.

42.4 Within thirty (30) **Days** after receipt of a satisfactory payment application, and within sixty (60) **Days** after receipt of a satisfactory payment application in relation to **Work** performed pursuant to a change order, the **Engineer** will prepare and certify, and the **Commissioner** will approve, a voucher for a partial payment in the amount of such approved estimate, less any and all deductions authorized to be made by the **Commissioner** under the terms of this **Contract** or by **Law**.

ARTICLE 43. PROMPT PAYMENT

43.1 The Prompt Payment provisions of the **PPB** Rules in effect at the time of the bid will be applicable to payments made under this **Contract**. The provisions require the payment to the **Contractor** of interest on payments made after the required payment date, except as set forth in the **PPB** Rules.

43.2 The **Contractor** shall submit a proper invoice to receive payment, except where the **Contract** provides that the **Contractor** will be paid at predetermined intervals without having to submit an invoice for each scheduled payment.

43.3 Determination of interest due will be made in accordance with the **PPB** Rules.

43.4 If the **Contractor** is paid interest, the proportionate share(s) of that interest shall be forwarded by the **Contractor** to its **Subcontractor(s)**.

43.5 The **Contractor** shall pay each **Subcontractor** or **Materialman** not later than seven (7) **Days** after receipt of payment out of amounts paid to the **Contractor** by the **City** for **Work** performed by the **Subcontractor** or **Materialman** under this **Contract**.

43.5.1 If **Contractor** fails to make any payment to any **Subcontractor** or **Materialman** within seven (7) **Days** after receipt of payment by the **City** pursuant to this Article 43.5, then the **Contractor** shall pay interest on amounts due to such **Subcontractor** or **Materialman** at the rate of interest in effect on the date such payment is made by the **Contractor** computed in accordance with Section 756-b (1)(b) of the New York General Business Law. Accrual of interest shall commence on the **Day** immediately following the expiration of the seventh **Day** following receipt of payment by the **Contractor** from the **City** and shall end on the date on which payment is made.

43.6 The **Contractor** shall include in each of its subcontracts a provision requiring each **Subcontractor** to make payment to each of its **Subcontractors** or **Materialmen** for **Work** performed under this **Contract** in the same manner and within the same time period set forth above.

ARTICLE 44. SUBSTANTIAL COMPLETION PAYMENT

44.1 The **Contractor** shall submit with the **Substantial Completion** requisition:

44.1.1 A final verified statement of any pending Article 27 disputes in accordance with the **PPB** Rules and this **Contract** and any and all alleged claims against the **City**, in any way connected with or arising out of this **Contract** (including those as to which details may have been furnished pursuant to Articles 11, 27, 28, and 30) setting forth with respect to each such claim the total amount thereof, the various items of labor and materials included therein, and the alleged value of each item; and if the alleged claim be one for delay, the alleged cause of each such delay, the period or periods of time, giving the dates when the

Contractor claims the performance of the **Work** or a particular part thereof was delayed, and an itemized statement and breakdown of the amount claimed for each such delay.

44.1.1(a) With respect to each such claim, the **Commissioner**, the **Comptroller** and, in the event of litigation, the **City** Corporation Counsel shall have the same right to inspect, and to make extracts or copies of, the **Contractor's** books, vouchers, records, etc., as is referred to in Articles 11, 27, 28, and 30. Nothing contained in this Article 44.1.1(a) is intended to or shall relieve the **Contractor** from the obligation of complying strictly with Articles 11, 27, 28, and 30. The **Contractor** is warned that unless such claims are completely set forth as herein required, the **Contractor** upon acceptance of the **Substantial Completion** payment pursuant to this Article 44, will have waived any such claims.

44.1.2 A **Final Approved Punch List.**

44.1.3 Where required, a request for an extension of time to achieve **Substantial Completion** or final extension of time.

44.2 The **Commissioner** shall issue a voucher calling for payment of any part or all of the balance due for **Work** performed under the **Contract**, including monies retained under Article 21, less any and all deductions authorized to be made by the **Commissioner**, under this **Contract** or by **Law**, and less twice the amount the **Commissioner** considers necessary to ensure the completion of the balance of the **Work** by the **Contractor**. Such a payment shall be considered a partial and not a final payment. No **Substantial Completion** payment shall be made under this Article 44 where the **Contractor** failed to complete the **Work** within the time fixed for such completion in the Schedule A of the General Conditions, or within the time to which completion may have been extended, until an extension or extensions of time for the completion of **Work** have been acted upon pursuant to Article 13.

44.3 No further partial payments shall be made to the **Contractor** after **Substantial Completion**, except the **Substantial Completion** payment and payment pursuant to any **Contractor's** requisition that were properly filed with the **Commissioner** prior to the date of **Substantial Completion**; however, the **Commissioner** may grant a waiver for further partial payments after the date of **Substantial Completion** to permit payments for change order **Work** and/or release of retainage and deposits pursuant to Articles 21 and 24. Such waiver shall be in writing.

44.4 The **Contractor** acknowledges that nothing contained in this Article 44 is intended to or shall in any way diminish the force and effect of Article 13.

ARTICLE 45. FINAL PAYMENT

45.1 After completion and **Final Acceptance** of the **Work**, the **Contractor** shall submit all required certificates and documents, together with a requisition for the balance claimed to be due under the **Contract**, less the amount authorized to be retained for maintenance under Article 24. Such submission shall be within 90 days of the date of the **Commissioner's** written determination of **Final Acceptance**, or within such additional time as may be granted by the **Commissioner** in writing. If the **Contractor** fails to submit all required certificates and documents within the time allowed, no payment of the balance claimed shall be made to the **Contractor** and the **Contractor** shall be deemed to have forfeited its right to payment of any balance claimed. A verified statement similar to that required in connection with applications for partial payments shall also be submitted to the **Commissioner**.

45.2 Amended Verified Statement of Claims: The **Contractor** shall also submit with the final requisition any amendments to the final verified statement of any pending dispute resolution procedures in accordance with the **PPB** Rules and this **Contract** and any and all alleged claims against the **City**, in any way connected with or arising out of this **Contract** (including those as to which details may have been furnished pursuant to Articles 11, 27, 28, and 30) that have occurred subsequent to **Substantial Completion**, setting forth with respect to each such claim the total amount thereof, the various items of labor and materials included therein, and the alleged value of each such item; and if the alleged claim be one for delay, the alleged cause of each such delay, the period or periods of time, giving the dates when the **Contractor** claims the performance of the **Work** or a particular part thereof was delayed, and an itemized statement and breakdown of the amount claimed for each such delay. With reference to each such claim, the **Commissioner**, the **Comptroller** and, in the event of litigation, the **City** Corporation Counsel shall have the same right to inspect, and to make extracts or copies of, the **Contractor's** books, vouchers, records, etc., as is referred to in Articles 11, 27, 28, and 30. Nothing contained in this Article 45.2, is intended to or shall relieve the **Contractor** from the obligation of complying strictly with Articles 11, 27, 28, and 30. The **Contractor** is warned that unless such claims are completely set forth as herein required, the **Contractor**, upon acceptance of the Final Payment pursuant to Article 46, will have waived any such claims.

45.3 Preparation of Final Voucher: Upon determining the balance due hereunder other than on account of claims, the **Engineer** will prepare and certify, for the Commissioner's approval, a voucher for final payment in that amount less any and all deductions authorized to be made by the **Commissioner** under this **Contract** or by **Law**. In the case of a lump sum **Contract**, the **Commissioner** shall certify the voucher for final payment within thirty (30) **Days** from the date of completion and acceptance of the **Work**, provided all requests for extensions of time have been acted upon.

45.3.1 All prior certificates and vouchers upon which partial payments were made, being merely estimates made to enable the **Contractor** to prosecute the **Work** more advantageously, shall be subject to correction in the final voucher, and the certification of the **Engineer** thereon and the approval of the **Commissioner** thereof, shall be conditions precedent to the right of the **Contractor** to receive any money hereunder. Such final voucher shall be binding and conclusive upon the **Contractor**.

45.3.2 Payment pursuant to such final voucher, less any deductions authorized to be made by the **Commissioner** under this **Contract** or by **Law**, shall constitute the final payment, and shall be made by the **Comptroller** within thirty (30) **Days** after the filing of such voucher in his/her office.

45.4 The **Contractor** acknowledges that nothing contained in this Article 45 is intended to or shall in any way diminish the force and effect of Article 13.

ARTICLE 46. ACCEPTANCE OF FINAL PAYMENT

46.1 The acceptance by the **Contractor**, or by anyone claiming by or through it, of the final payment, whether such payment be made pursuant to any judgment of any court, or otherwise, shall constitute and operate as a release of the **City** from any and all claims of and liability to the **Contractor** for anything heretofore done or furnished for the **Contractor** relating to or arising out of this **Contract** and the **Work** done hereunder, and for any prior act, neglect or default on the part of the **City** or any of its officials, agents or employees, excepting only a claim against the **City** for the amounts deducted or retained in accordance with the terms and provisions of this **Contract** or by **Law**, and excepting any claims, not otherwise waived, or any pending dispute resolution procedures which are contained in the

verified statement filed with the **Contractor's** substantial and final requisitions pursuant to Articles 44 and 45.

46.2 The **Contractor** is warned that the execution by it of a release, in connection with the acceptance of the final payment, containing language purporting to reserve claims other than those herein specifically excepted from the operation of this Article 46, or those for amounts deducted by the **Commissioner** from the final requisition or from the final payment as certified by the **Engineer** and approved by the **Commissioner**, shall not be effective to reserve such claims, anything stated to the **Contractor** orally or in writing by any official, agent or employee of the **City** to the contrary notwithstanding.

46.3 Should the **Contractor** refuse to accept the final payment as tendered by the **Comptroller**, it shall constitute a waiver of any right to interest thereon.

46.4 The **Contractor**, however, shall not be barred by this Article 46 from commencing an action for breach of **Contract** to the extent permitted by **Law** and by the terms of the **Contract** for any claims that are contained in the verified statement filed with the **Contractor's** substantial and final requisitions pursuant to Articles 44 and 45 or that arose after submission of the final payment requisition, provided that a detailed and verified statement of claim is served upon the contracting **Agency** and **Comptroller** not later than forty (40) **Days** after the making of such final payment by electronic funds transfer (EFT) or the mailing of such final payment. The statement shall specify the items upon which the claim will be based and any such claim shall be limited to such items.

ARTICLE 47. APPROVAL BY PUBLIC DESIGN COMMISSION

47.1 All works of art, including paintings, mural decorations, stained glass, statues, bas-reliefs, and other sculptures, monuments, fountains, arches, and other structures of a permanent character intended for ornament or commemoration, and every design of the same to be used in the performance of this **Contract**, and the design of all bridges, approaches, buildings, gates, fences, lamps, or structures to be erected, pursuant to the terms of this **Contract**, shall be submitted to the Art Commission, d/b/a the Public Design Commission of the City of New York, and shall be approved by the Public Design Commission prior to the erection or placing in position of the same. The final payment shall not become due or payable under this **Contract** unless and until the Public Design Commission shall certify that the design for the **Work** herein contracted for has been approved by the said Public Design Commission, and that the same has been executed in substantial accordance with the design so approved, pursuant to the provisions of Chapter 37, Section 854 of the **City** Charter, as amended.

CHAPTER X: CONTRACTOR'S DEFAULT

ARTICLE 48. COMMISSIONER'S RIGHT TO DECLARE CONTRACTOR IN DEFAULT

48.1 In addition to those instances specifically referred to in other Articles herein, the **Commissioner** shall have the right to declare the **Contractor** in default of this **Contract** if:

48.1.1 The **Contractor** fails to commence **Work** when notified to do so by the **Commissioner**; or if

48.1.2 The **Contractor** shall abandon the **Work**; or if

48.1.3 The **Contractor** shall refuse to proceed with the **Work** when and as directed by the **Commissioner**; or if

48.1.4 The **Contractor** shall, without just cause, reduce its working force to a number which, if maintained, would be insufficient, in the opinion of the **Commissioner**, to complete the **Work** in accordance with the progress schedule; or if

48.1.5 The **Contractor** shall fail or refuse to increase sufficiently such working force when ordered to do so by the **Commissioner**; or if

48.1.6 The **Contractor** shall sublet, assign, transfer, convert or otherwise dispose of this **Contract** other than as herein specified; or sell or assign a majority interest in the **Contractor**; or if

48.1.7 The **Contractor** fails to secure and maintain all required insurance; or if

48.1.8 A receiver or receivers are appointed to take charge of the **Contractor's** property or affairs; or if

48.1.9 The **Commissioner** shall be of the opinion that the **Contractor** is or has been unnecessarily or unreasonably or willfully delaying the performance and completion of the **Work**, or the award of necessary subcontracts, or the placing of necessary material and equipment orders; or if

48.1.10 The **Commissioner** shall be of the opinion that the **Contractor** is or has been willfully or in bad faith violating any of the provisions of this **Contract**; or if

48.1.11 The **Commissioner** shall be of the opinion that the **Work** cannot be completed within the time herein provided therefor or within the time to which such completion may have been extended; provided, however, that the impossibility of timely completion is, in the **Commissioner's** opinion, attributable to conditions within the **Contractor's** control; or if

48.1.12 The **Work** is not completed within the time herein provided therefor or within the time to which the **Contractor** may be entitled to have such completion extended; or if

48.1.13 Any statement or representation of the **Contractor** in the **Contract** or in any document submitted by the **Contractor** with respect to the **Work**, the **Project**, or the **Contract** (or for purposes of securing the **Contract**) was untrue or incorrect when made; or if

48.1.14 The **Contractor** or any of its officers, directors, partners, five (5%) percent shareholders, principals, or other persons substantially involved in its activities, commits any of the acts or omissions specified as the grounds for debarment in the **PPB** Rules.

48.2 Before the **Commissioner** shall exercise his/her right to declare the **Contractor** in default, the **Commissioner** shall give the **Contractor** an opportunity to be heard, upon not less than two (2) **Days'** notice.

ARTICLE 49. EXERCISE OF THE RIGHT TO DECLARE DEFAULT

49.1 The right to declare the **Contractor** in default for any of the grounds specified or referred to in Article 48 shall be exercised by sending the **Contractor** a notice, signed by the **Commissioner**, setting forth the ground or grounds upon which such default is declared (hereinafter referred to as a "Notice of Default").

49.2 The **Commissioner's** determination that the **Contractor** is in default shall be conclusive, final, and binding on the parties and such a finding shall preclude the **Contractor** from commencing a plenary action for any damages relating to the **Contract**. If the **Contractor** protests the determination of the **Commissioner**, the **Contractor** may commence an action in a court of competent jurisdiction of the State of New York under Article 78 of the New York Civil Practice Law and Rules.

ARTICLE 50. QUITTING THE SITE

50.1 Upon receipt of such notice the **Contractor** shall immediately discontinue all further operations under this **Contract** and shall immediately quit the **Site**, leaving untouched all plant, materials, equipment, tools, and supplies then on the **Site**.

ARTICLE 51. COMPLETION OF THE WORK

51.1 The **Commissioner**, after declaring the **Contractor** in default, may then have the **Work** completed by such means and in such manner, by contract with or without public letting, or otherwise, as he/she may deem advisable, utilizing for such purpose such of the **Contractor's** plant, materials, equipment, tools, and supplies remaining on the **Site**, and also such **Subcontractors**, as he/she may deem advisable.

51.2 After such completion, the **Commissioner** shall make a certificate stating the expense incurred in such completion, which shall include the cost of re-letting and also the total amount of liquidated damages (at the rate provided for in the **Contract**) from the date when the **Work** should have been completed by the **Contractor** in accordance with the terms hereof to the date of actual completion of the **Work**. Such certificate shall be binding and conclusive upon the **Contractor**, its sureties, and any person claiming under the **Contractor**, as to the amount thereof.

51.3 The expense of such completion, including any and all related and incidental costs, as so certified by the **Commissioner**, and any liquidated damages assessed against the **Contractor**, shall be charged against and deducted out of monies which are earned by the **Contractor** prior to the date of default. Should the expense of such completion, as certified by the **Commissioner**, exceed the total sum which would have been payable under the **Contract** if it had been completed by the **Contractor**, any excess shall be paid by the **Contractor**.

ARTICLE 52. PARTIAL DEFAULT

52.1 In case the **Commissioner** shall declare the **Contractor** in default as to a part of the **Work** only, the **Contractor** shall discontinue such part, shall continue performing the remainder of the **Work** in strict conformity with the terms of this **Contract**, and shall in no way hinder or interfere with any **Other Contractor(s)** or persons whom the **Commissioner** may engage to complete the **Work** as to which the **Contractor** was declared in default.

52.2 The provisions of this Chapter relating to declaring the **Contractor** in default as to the entire **Work** shall be equally applicable to a declaration of partial default, except that the **Commissioner** shall be entitled to utilize for completion of the part of the **Work** as to which the **Contractor** was declared in default only such plant, materials, equipment, tools, and supplies as had been previously used by the **Contractor** on such part.

ARTICLE 53. PERFORMANCE OF UNCOMPLETED WORK

53.1 In completing the whole or any part of the **Work** under the provisions of this Chapter X, the **Commissioner** shall have the power to depart from or change or vary the terms and provisions of this **Contract**, provided, however, that such departure, change or variation is made for the purpose of reducing the time or expense of such completion. Such departure, change or variation, even to the extent of accepting a lesser or different performance, shall not affect the conclusiveness of the **Commissioner's** certificate of the cost of completion referred to in Article 51, nor shall it constitute a defense to an action to recover the amount by which such certificate exceeds the amount which would have been payable to the **Contractor** hereunder but for its default.

ARTICLE 54. OTHER REMEDIES

54.1 In addition to the right to declare the **Contractor** in default pursuant to this Chapter X, the **Commissioner** shall have the absolute right, in his/her sole discretion and without a hearing, to complete or cause to be completed in the same manner as described in Articles 51 and 53, any or all unsatisfactory or uncompleted punch list **Work** that remains after the completion date specified in the **Final Approved Punch List**. A written notice of the exercise of this right shall be sent to the **Contractor** who shall immediately quit the **Site** in accordance with the provisions of Article 50.

54.2 The expense of completion permitted under Article 54.1, including any and all related and incidental costs, as so certified by the **Commissioner**, shall be charged against and deducted out of monies which have been earned by the **Contractor** prior to the date of the exercise of the right set forth in Article 54.1; the balance of such monies, if any, subject to the other provisions of this **Contract**, to be paid to the **Contractor** without interest after such completion. Should the expense of such completion, as certified by the **Commissioner**, exceed the total sum which would have been payable under the **Contract** if it had been completed by the **Contractor**, any excess shall be paid by the **Contractor**.

54.3 The previous provisions of this Chapter X shall be in addition to any and all other remedies available under **Law** or in equity.

54.4 The exercise by the **City** of any remedy set forth herein shall not be deemed a waiver by the **City** of any other legal or equitable remedy contained in this **Contract** or provided under **Law**.

CHAPTER XI: MISCELLANEOUS PROVISIONS

ARTICLE 55. CONTRACTOR'S WARRANTIES

55.1 In consideration of, and to induce, the award of this **Contract** to the **Contractor**, the **Contractor** represents and warrants:

55.1.1 That it is financially solvent, sufficiently experienced and competent to perform the **Work**; and

55.1.2 That the facts stated in its bid and the information given by it pursuant to the Information for Bidders is true and correct in all respects; and

55.1.3 That it has read and complied with all requirements set forth in the **Contract**.

ARTICLE 56. CLAIMS AND ACTIONS THEREON

56.1 Any claim, that is not subject to dispute resolution under the **PPB** Rules or this **Contract**, against the **City** for damages for breach of **Contract** shall not be made or asserted in any action, unless the **Contractor** shall have strictly complied with all requirements relating to the giving of notice and of information with respect to such claims, as herein before provided.

56.2 Nor shall any action be instituted or maintained on any such claims unless such action is commenced within six (6) months after **Substantial Completion**; except that:

56.2.1 Any claims arising out of events occurring after **Substantial Completion** and before **Final Acceptance** of the **Work** shall be asserted within six (6) months of **Final Acceptance** of the **Work**;

56.2.2 If the **Commissioner** exercises his/her right to complete or cause to complete any or all unsatisfactory or uncompleted punch list **Work** that remains after the completion date specified in the **Final Approved Punch List** pursuant to Article 54, any such action shall be commenced within six (6) months from the date the **Commissioner** notifies the **Contractor** in writing that he/she has exercised such right. Any claims for monies deducted, retained or withheld under the provisions of this **Contract** shall be asserted within six (6) months after the date when such monies otherwise become due and payable hereunder; and

56.2.3 If the **Commissioner** exercises his/her right to terminate the **Contract** pursuant to Article 64, any such action shall be commenced within six (6) months of the date the **Commissioner** exercises said right.

ARTICLE 57. INFRINGEMENT

57.1 The **Contractor** shall be solely responsible for and shall defend, indemnify, and hold the **City** harmless from any and all claims (even if the allegations of the lawsuit are without merit) and judgments for damages and from costs and expenses to which the **City** may be subject to or which it may suffer or incur allegedly arising out of or in connection with any infringement by the **Contractor** of any copyright, trade secrets, trademark or patent rights or any other property or personal right of any third party by the **Contractor** and/or its **Subcontractors** in the performance or completion of the **Work**. Insofar as the facts or **Law** relating to any claim would preclude the **City** from being completely indemnified by the **Contractor**, the **City** shall be partially indemnified by the **Contractor** to the fullest extent permitted by **Law**.

ARTICLE 58. NO CLAIM AGAINST OFFICIALS, AGENTS OR EMPLOYEES

58.1 No claim whatsoever shall be made by the **Contractor** against any official, agent or employee of the **City** for, or on account of, anything done or omitted to be done in connection with this **Contract**.

ARTICLE 59. SERVICE OF NOTICES

59.1 The **Contractor** hereby designates the business address, fax number, and email address specified in its bid, as the place where all notices, directions or other communications to the **Contractor** may be delivered, or to which they may be mailed. Any notice, direction, or communication from either party to the other shall be in writing and shall be deemed to have been given when (i) delivered personally; (ii) sent by certified mail, return receipt requested; (iii) delivered by overnight or same day courier service in a properly addressed envelope with confirmation; or (iv) sent by fax or email and, unless receipt of the fax or e-mail is acknowledged by the recipient by fax or e-mail, deposited in a post office box regularly maintained by the United States Postal Service in a properly addressed, postage pre-paid envelope.

59.2 **Contractor's** notice address, email address, or fax number may be changed at any time by an instrument in writing, executed and acknowledged by the **Contractor**, and delivered to the **Commissioner**.

59.3 Nothing herein contained shall, however, be deemed to preclude or render inoperative the service of any notice, direction or other communication upon the **Contractor** personally, or, if the **Contractor** is a corporation, upon any officer thereof.

ARTICLE 60. UNLAWFUL PROVISIONS DEEMED STRICKEN FROM CONTRACT

60.1 If this **Contract** contains any unlawful provision not an essential part of the **Contract** and which shall not appear to have been a controlling or material inducement to the making thereof, the same shall be deemed of no effect and shall, upon notice by either party, be deemed stricken from the **Contract** without affecting the binding force of the remainder.

ARTICLE 61. ALL LEGAL PROVISIONS DEEMED INCLUDED

61.1 It is the intent and understanding of the parties to this **Contract** that each and every provision of **Law** required to be inserted in this **Contract** shall be and is inserted herein. Furthermore, it is hereby stipulated that every such provision is to be deemed to be inserted herein, and if, through mistake or otherwise, any such provision is not inserted, or is not inserted in correct form, then this **Contract** shall forthwith upon the application of either party be amended by such insertion so as to comply strictly with the **Law** and without prejudice to the rights of either party hereunder.

ARTICLE 62. TAX EXEMPTION

62.1 The **City** is exempt from payment of Federal, State, and local taxes, including sales and compensating use taxes of the State of New York and its cities and counties on all tangible personal property sold to the **City** pursuant to the provisions of this **Contract**. These taxes are not to be included in bids. However, this exemption does not apply to tools, machinery, equipment or other property leased by or to the **Contractor**, **Subcontractor** or **Materialman** or to tangible personal property which, even

though it is consumed, is not incorporated into the completed **Work** (consumable supplies) and tangible personal property that the **Contractor** is required to remove from the **Site** during or upon completion of the **Work**. The **Contractor** and its **Subcontractors** and **Materialmen** shall be responsible for and pay any and all applicable taxes, including sales and compensating use taxes, on such leased tools, machinery, equipment or other property and upon all such consumable supplies and tangible personal property that the **Contractor** is required to remove from the **Site** during or upon completion of the **Work**.

62.2 The **Contractor** agrees to sell and the **City** agrees to purchase all tangible personal property, other than consumable supplies and other tangible personal property that the **Contractor** is required to remove from the **Site** during or upon completion of the **Work**, that is required, necessary or proper for or incidental to the construction of the **Project** covered by this **Contract**. The sum paid under this **Contract** for such tangible personal property shall be in full payment and consideration for the sale of such tangible personal property.

62.2.1 The **Contractor** agrees to construct the **Project** and to perform all **Work**, labor and services rendered, necessary, proper or incidental thereto for the sum shown in the bid for the performance of such **Work**, labor, and services, and the sum so paid pursuant to this **Contract** for such **Work**, labor, and services, shall be in full consideration for the performance by the **Contractor** of all its duties and obligations under this **Contract** in connection with said **Work**, labor, and services.

62.3 20 NYCRR Section 541.3(d) provides that a **Contractor**'s purchases of tangible personal property that is either incorporated into real property owned by a governmental entity or purchased for and sold to a governmental entity are exempt from sales and use tax. The **City** shall not pay sales tax for any such tangible personal property that it purchases from the **Contractor** pursuant to the **Contract.** With respect to such tangible personal property, the **Contractor**, at the request of the **City**, shall furnish to the **City** such bills of sale and other instruments as may be required by the **City**, properly executed, acknowledged and delivered assuring to the **City** title to such tangible personal property, free of liens and/or encumbrances, and the **Contractor** shall mark or otherwise identify all such tangible personal property as the property of the **City**.

62.4 Title to all tangible personal property to be sold by the **Contractor** to the **City** pursuant to the provisions of the **Contract** shall immediately vest in and become the sole property of the **City** upon delivery of such tangible personal property to the **Site**. Notwithstanding such transfer of title, the **Contractor** shall have the full and continuing responsibility to install such tangible personal property in accordance with the provisions of this **Contract**, protect it, maintain it in a proper condition and forthwith repair, replace and make good any damage thereto, theft or disappearance thereof, and furnish additional tangible personal property in place of any that may be lost, stolen or rendered unusable, without cost to the **City**, until such time as the **Work** covered by the **Contract** is fully accepted by the **City**. Such transfer of title shall in no way affect any of the **Contractor's** obligations hereunder. In the event that, after title has passed to the **City**, any of the tangible personal property is rejected as being defective or otherwise unsatisfactory, title to all such tangible personal property shall be deemed to have been transferred back to the **Contractor**.

62.5 The purchase by **Subcontractors** or **Materialmen** of tangible personal property to be sold hereunder shall be a purchase or procurement for resale to the **Contractor** (either directly or through other **Subcontractors**) and therefore not subject to the aforesaid sales and compensating use taxes, provided that the subcontracts and purchase agreements provide for the resale of such tangible personal property and that such subcontracts and purchase agreements are in a form similar to this **Contract** with respect to the separation of the sale of consumable supplies and tangible personal property that the

Contractor is required to remove from the **Site** during or upon completion of the **Work** from the **Work** and labor, services, and any other matters to be provided, and provided further that the subcontracts and purchase agreements provide separate prices for tangible personal property and all other services and matters. Such separation shall actually be followed in practice, including the separation of payments for tangible personal property from the payments for other **Work** and labor and other things to be provided.

62.6 The **Contractor** and its **Subcontractors** and **Materialmen** shall furnish a **Contractor** Exempt Purchase Certificate to all persons, firms or corporations from which they purchase tangible personal property for the performance of the **Work** covered by this **Contract**.

62.7 In the event any of the provisions of this Article 62 shall be deemed to be in conflict with any other provisions of this **Contract** or create any ambiguity, then the provisions of this Article 62 shall control.

ARTICLE 63. INVESTIGATION(S) CLAUSE

63.1 The parties to this **Contract** agree to cooperate fully and faithfully with any investigation, audit or inquiry conducted by a United States, a State of New York (State) or a **City** governmental agency or authority that is empowered directly or by designation to compel the attendance of witnesses and to examine witnesses under oath, or conducted by the Inspector General of a governmental agency that is a party in interest to the transaction, submitted bid, submitted proposal, contract, lease, permit or license that is the subject of the investigation, audit or inquiry.

63.2 If any person who has been advised that his/her statement, and any information from such statement, will not be used against him/her in any subsequent criminal proceeding refuses to testify before a grand jury or other governmental agency or authority empowered directly or by designation to compel the attendance of witnesses and to examine witnesses under oath concerning the award of or performance under any transaction, agreement, lease, permit, contract, or license entered into with the **City**, the State, or any political subdivision or public authority thereof, or the Port Authority of New York and New Jersey, or any local development corporation within the **City**, or any public benefit corporation organized under the **Laws** of the State of New York, or;

63.3 If any person refuses to testify for a reason other than the assertion of his/her privilege against self incrimination in an investigation, audit or inquiry conducted by a **City** or State governmental agency or authority empowered directly or by designation to compel the attendance of witnesses and to take testimony under oath, or by the Inspector General of the governmental agency that is a party in interest in, and is seeking testimony concerning the award of, or performance under any transaction, agreement, lease, permit, contract, or license entered into with the **City**, the State, or any political subdivision thereof or any local development corporation within the **City**, then;

63.4 The **Commissioner** whose **Agency** is a party in interest to the transaction, submitted bid, submitted proposal, contract, lease, permit, or license shall convene a hearing, upon not less than five (5) **Days**' written notice to the parties involved to determine if any penalties should attach for the failure of a person to testify.

63.5 If any non-governmental party to the hearing requests an adjournment, the **Commissioner** who convened the hearing may, upon granting the adjournment, suspend any contract, lease, permit, or license, pending the final determination pursuant to Article 63.7 without the **City** incurring any penalty or damages for delay or otherwise.

63.6 The penalties which may attach after a final determination by the **Commissioner** may include but shall not exceed:

63.6.1 The disqualification for a period not to exceed five (5) years from the date of an adverse determination for any person, or any entity of which such person was a member at the time the testimony was sought, from submitting bids for, or transacting business with, or entering into or obtaining any contract, lease, permit or license with or from the **City**; and/or

63.6.2 The cancellation or termination of any and all such existing **City** contracts, leases, permits or licenses that the refusal to testify concerns and that have not been assigned as permitted under this **Contract**, nor the proceeds of which pledged, to an unaffiliated and unrelated institutional lender for fair value prior to the issuance of the notice scheduling the hearing, without the **City** incurring any penalty or damages on account of such cancellation or termination; monies lawfully due for goods delivered, work done, rentals, or fees accrued prior to the cancellation or termination shall be paid by the **City**.

63.7 The **Commissioner** shall consider and address in reaching his/her determination and in assessing an appropriate penalty the factors in Articles 63.7.1 and 63.7.2. The **Commissioner** may also consider, if relevant and appropriate, the criteria established in Articles 63.7.3 and 63.7.4, in addition to any other information which may be relevant and appropriate:

63.7.1 The party's good faith endeavors or lack thereof to cooperate fully and faithfully with any governmental investigation or audit, including but not limited to the discipline, discharge, or disassociation of any person failing to testify, the production of accurate and complete books and records, and the forthcoming testimony of all other members, agents, assignees or fiduciaries whose testimony is sought.

63.7.2 The relationship of the person who refused to testify to any entity that is a party to the hearing, including but not limited to, whether the person whose testimony is sought has an ownership interest in the entity and/or the degree of authority and responsibility the person has within the entity.

63.7.3 The nexus of the testimony sought to the subject entity and its contracts, leases, permits or licenses with the **City**.

63.7.4 The effect a penalty may have on an unaffiliated and unrelated party or entity that has a significant interest in an entity subject to penalties under Article 63.6, provided that the party or entity has given actual notice to the **Commissioner** upon the acquisition of the interest, or at the hearing called for in Article 63.4, gives notice and proves that such interest was previously acquired. Under either circumstance the party or entity shall present evidence at the hearing demonstrating the potential adverse impact a penalty will have on such person or entity.

63.8 Definitions:

63.8.1 The term "license" or "permit" as used in this Article 63 shall be defined as a license, permit, franchise or concession not granted as a matter of right.

63.8.2 The term "person" as used in this Article 63 shall be defined as any natural person doing business alone or associated with another person or entity as a partner, director, officer, principal or employee.

63.8.3 The term "entity" as used in this Article 63 shall be defined as any firm, partnership, corporation, association, joint venture, or person that receives monies, benefits, licenses, leases, or permits from or through the **City** or otherwise transacts business with the **City**.

63.8.4 The term "member" as used in this Article 63 shall be defined as any person associated with another person or entity as a partner, director, officer, principal or employee.

63.9 In addition to and notwithstanding any other provision of this **Contract**, the **Commissioner** may in his/her sole discretion terminate this **Contract** upon not less than three (3) **Days'** written notice in the event the **Contractor** fails to promptly report in writing to the **Commissioner** of the Department of Investigations ("DOI") of the **City** any solicitation of money, goods, requests for future employment or other benefit or thing of value, by or on behalf of any employee of the **City** or other person, firm, corporation or entity for any purpose which may be related to the procurement or obtaining of this **Contract** by the **Contractor**, or affecting the performance of this **Contract**.

ARTICLE 64. TERMINATION BY THE CITY

64.1 In addition to termination pursuant to any other article of this **Contract**, the **Commissioner** may, at any time, terminate this **Contract** by written notice to the **Contractor**. In the event of termination, the **Contractor** shall, upon receipt of such notice, unless otherwise directed by the **Commissioner**:

64.1.1 Stop **Work** on the date specified in the notice;

64.1.2 Take such action as may be necessary for the protection and preservation of the **City's** materials and property;

64.1.3 Cancel all cancelable orders for material and equipment;

64.1.4 Assign to the **City** and deliver to the **Site** or another location designated by the **Commissioner**, any non-cancelable orders for material and equipment that is not capable of use except in the performance of this **Contract** and has been specifically fabricated for the sole purpose of this **Contract** and not incorporated in the **Work**;

64.1.5 Take no action which will increase the amounts payable by the **City** under this **Contract**.

64.2 In the event of termination by the **City** pursuant to this Article 64, payment to the **Contractor** shall be in accordance with Articles 64.2.1, 64.2.2 or 64.2.3, to the extent that each respective article applies.

64.2.1 Lump Sum Contracts or Items: On all lump sum **Contracts**, or on lump sum items in a **Contract**, the **City** will pay the **Contractor** the sum of the amounts described in Articles 64.2.1(a) and 64.2.1(b), less all payments previously made pursuant to this **Contract**. On lump sum **Contracts** only, the **City** will also pay the **Contractor** an additional sum as provided in Article 64.2.1(c).

64.2.1(a) For **Work** completed prior to the notice of termination, the **Contractor** shall be paid a pro rata portion of the lump sum bid amount, plus approved change orders, based upon the percent completion of the **Work**, as determined by the

Commissioner. For the purpose of determining the pro rata portion of the lump sum bid amount to which the **Contractor** is entitled, the bid breakdown submitted in accordance with Article 41 shall be considered, but shall not be dispositive. The **Commissioner's** determination hereunder shall be final, binding, and conclusive.

64.2.1(b) For non-cancelable material and equipment that is not capable of use except in the performance of this **Contract** and has been specifically fabricated for the sole purpose of this **Contract**, but not yet incorporated in the **Work**, the **Contractor** shall be paid the lesser of the following, less salvage value:

64.2.1(b)(i) The Direct Cost, as defined in Article 64.2.4; or

64.2.1(b)(ii) The fair and reasonable value, if less than Direct Cost, of such material and equipment, plus necessary and reasonable delivery costs.

64.2.1(b)(iii) In addition, the **Contractor** shall be paid five (5%) percent of the amount described in Article 64.2.1(b)(i) or Article 64.2.1(b)(ii), whichever applies.

64.2.1(c) Except as otherwise provided in Article 64.2.1(d), on all lump sum **Contracts**, the **Contractor** shall be paid the percentage indicated below applied to the difference between the total lump sum bid amount and the total of all payments made prior to the notice of termination plus all payments allowed pursuant to Articles 64.2.1(a) and 64.2.1(b):

64.2.1(c)(i) Five (5%) percent of the first five million ($5,000,000) dollars; and

64.2.1(c)(ii) Three (3%) percent of any amount between five million ($5,000,000) dollars and fifteen million ($15,000,000) dollars; plus

64.2.1(c)(iii) One (1%) percent of any amount over fifteen million ($15,000,000) dollars.

64.2.1(d) In the event the **City** terminates a lump sum **Contract** pursuant to this Article 64 within ninety (90) **Days** after registration of the **Contract** with the **Comptroller**, the **Contractor** shall be paid one (1%) percent of the difference between the lump sum bid amount and the total of all payments made pursuant to this Article 64.2.

64.2.2 Unit Price Contracts or Items: On all unit price **Contracts**, or on unit price items in a **Contract**, the **City** will pay the **Contractor** the sum of the amounts described in Articles 64.2.2(a) and 64.2.2(b), less all payments previously made pursuant to this **Contract**:

64.2.2(a) For all completed units, the unit price stated in the **Contract**, and

64.2.2(b) For units that have been ordered but are only partially completed, the **Contractor** will be paid:

64.2.2(b)(i) A pro rata portion of the unit price stated in the **Contract** based upon the percent completion of the unit and

64.2.2(b)(ii) For non-cancelable material and equipment, payment will be made pursuant to Article 64.2.1(b).

64.2.3 Time and Materials Contracts or Items Based on Time and Material Records: On all **Contracts** or items in a **Contract** where payment for the **Work** is based on time and material records, the **Contractor** shall be paid in accordance with Article 26, less all payments previously made pursuant to this **Contract**.

64.2.4 Direct Costs: Direct Costs as used in this Article 64.2 shall mean:

64.2.4(a) The actual purchase price of material and equipment, plus necessary and reasonable delivery costs,

64.2.4(b) The actual cost of labor involved in construction and installation at the **Site**, and

64.2.4(c) The actual cost of necessary bonds and insurance purchased pursuant to requirements of this **Contract** less any amounts that have been or should be refunded by the **Contractor's** sureties or insurance carriers.

64.2.4(d) Direct Costs shall not include overhead.

64.3 In no event shall any payments under this Article 64 exceed the **Contract** price for such items.

64.4 All payments pursuant to Article 64 shall be in the nature of liquidated damages and shall be accepted by the **Contractor** in full satisfaction of all claims against the **City**.

64.5 The **City** may deduct or set off against any sums due and payable pursuant to this Article 64, any deductions authorized by this **Contract** or by **Law** (including but not limited to liquidated damages) and any claims it may have against the **Contractor**. The **City's** exercise of the right to terminate the **Contract** pursuant to this Article 64 shall not impair or otherwise effect the **City's** right to assert any claims it may have against the **Contractor** in a plenary action.

64.6 Where the **Work** covered by the **Contract** has been substantially completed, as determined in writing by the **Commissioner**, termination of the **Work** shall be handled as an omission of **Work** pursuant to Articles 29 and 33, in which case a change order will be issued to reflect an appropriate reduction in the **Contract** sum, or if the amount is determined after final payment, such amount shall be paid by the **Contractor**.

ARTICLE 65. CHOICE OF LAW, CONSENT TO JURISDICTION AND VENUE

65.1 This **Contract** shall be deemed to be executed in the **City** regardless of the domicile of the **Contractor**, and shall be governed by and construed in accordance with the **Laws** of the State of New York and the **Laws** of the United States, where applicable.

65.2 The parties agree that any and all claims asserted against the **City** arising under this **Contract** or related thereto shall be heard and determined in the courts of the State of New York ("New York State Courts") located in the **City** and County of New York. To effect this **Contract** and intent, the **Contractor** agrees:

65.2.1 If the **City** initiates any action against the **Contractor** in Federal court or in a New York State Court, service of process may be made on the **Contractor** either in person, wherever such **Contractor** may be found, or by registered mail addressed to the **Contractor** at its address as set forth in this **Contract**, or to such other address as the **Contractor** may provide to the **City** in writing; and

65.2.2 With respect to any action between the **City** and the **Contractor** in a New York State Court, the **Contractor** hereby expressly waives and relinquishes any rights it might otherwise have:

65.2.2(a) To move to dismiss on grounds of forum non conveniens;

65.2.2(b) To remove to Federal Court; and

65.2.2(c) To move for a change of venue to a New York State Court outside New York County.

65.2.3 With respect to any action brought by the **City** against the **Contractor** in a Federal Court located in the **City**, the **Contractor** expressly waives and relinquishes any right it might otherwise have to move to transfer the action to a Federal Court outside the **City**.

65.2.4 If the **Contractor** commences any action against the **City** in a court located other than in the **City** and County of New York, upon request of the **City**, the **Contractor** shall either consent to a transfer of the action to a New York State Court of competent jurisdiction located in the **City** and County of New York or, if the Court where the action is initially brought will not or cannot transfer the action, the **Contractor** shall consent to dismiss such action without prejudice and may thereafter reinstate the action in a New York State Court of competent jurisdiction in New York County.

65.3 If any provision(s) of this Article 65 is held unenforceable for any reason, each and all other provision(s) shall nevertheless remain in full force and effect.

ARTICLE 66. PARTICIPATION IN AN INTERNATIONAL BOYCOTT

66.1 The **Contractor** agrees that neither the **Contractor** nor any substantially owned affiliated company is participating or shall participate in an international boycott in violation of the provisions of the Federal Export Administration Act of 1979, as amended, or the regulations of the United States Department of Commerce (Commerce Department) promulgated thereunder.

66.2 Upon the final determination by the Commerce Department or any other agency of the United States as to, or conviction of the **Contractor** or a substantially-owned affiliated company thereof for participation in an international boycott in violation of the provisions of the Export Administration Act of 1979, as amended, or the regulations promulgated thereunder, the **Comptroller** may, at his/her option, render forfeit and void this **Contract**.

66.3 The **Contractor** shall comply in all respects, with the provisions of Section 6-114 of the Administrative Code and the rules and regulations issued by the **Comptroller** thereunder.

ARTICLE 67. LOCALLY BASED ENTERPRISE PROGRAM

67.1 This **Contract** is subject to the requirements of Section 6-108.1 of the Administrative Code and regulations promulgated thereunder. No construction contract shall be awarded unless and until these requirements have been complied with in their entirety; however, compliance with this Article 67 is not required if the Agency sets Subcontractor Participation Goals for Minority- and Women-Owned Business Enterprises (M/WBEs).

67.2 Unless specifically waived by the **Commissioner** with the approval of the Division of Economic and Financial Opportunity of the **City** Department of Business Services, if any portion of the **Contract** is subcontracted, not less than ten (10%) percent of the total dollar amount of the **Contract** shall be awarded to locally based enterprises (LBEs); except that where less than ten (10%) percent of the total dollar amount of the **Contract** is subcontracted, such lesser percentage shall be so awarded.

67.3 The **Contractor** shall not require performance and payment bonds from LBE **Subcontractors**.

67.4 If the **Contractor** has indicated prior to award that no **Work** will be subcontracted, no **Work** shall be subcontracted without the prior approval of the **Commissioner**, which shall be granted only if the **Contractor** makes a good faith effort beginning at least six (6) weeks before the **Work** is to be performed to obtain LBE **Subcontractors** to perform the **Work**.

67.5 If the **Contractor** has not identified sufficient LBE **Subcontractors** prior to award, it shall sign a letter of compliance stating that it complies with Section 6-108.1 of the Administrative Code, recognizes that achieving the LBE requirement is a condition of its **Contract**, and shall submit documentation demonstrating its good faith efforts to obtain LBEs. After award, the **Contractor** shall begin to solicit LBE's to perform subcontracted **Work** at least six (6) weeks before the date such **Work** is to be performed and shall demonstrate that a good faith effort has been made to obtain LBEs on each subcontract until it meets the required percentage.

67.6 Failure of the **Contractor** to comply with the requirements of Section 6-108.1 of the Administrative Code and the regulations promulgated thereunder shall constitute a material breach of this **Contract**. Remedy for such breach may include the imposition of any or all of the following sanctions:

67.6.1 Reducing the **Contractor's** compensation by an amount equal to the dollar value of the percentage of the LBE subcontracting requirement not complied with;

67.6.2 Declaring the **Contractor** in default;

67.6.3 If the **Contractor** is an LBE, de-certifying and declaring the **Contractor** ineligible to participate in the LBE program for a period of up to three (3) years.

ARTICLE 68. ANTITRUST

68.1 The **Contractor** hereby assigns, sells, and transfers to the **City** all right, title, and interest in and to any claims and causes of action arising under the antitrust **Laws** of New York State or of the United States relating to the particular goods or services purchased or procured by the **City** under this **Contract**.

ARTICLE 69. MacBRIDE PRINCIPLES PROVISIONS

69.1 Notice To All Prospective **Contractors**:

69.1.1 Local Law No. 34 of 1991 became effective on September 10, 1991 and added Section 6-115.1 of the Administrative Code. The local **Law** provides for certain restrictions on **City Contracts** to express the opposition of the people of the **City** to employment discrimination practices in Northern Ireland to promote freedom of work-place opportunity.

69.1.2 Pursuant to Section 6-115.1, prospective **Contractors** for **Contracts** to provide goods or services involving an expenditure of an amount greater than ten thousand ($10,000.) dollars, or for construction involving an amount greater than fifteen thousand ($15,000.) dollars, are asked to sign a rider in which they covenant and represent, as a material condition of their **Contract**, that any business operations in Northern Ireland conducted by the **Contractor** and any individual or legal entity in which the **Contractor** holds a ten (10%) percent or greater ownership interest in the **Contractor** will be conducted in accordance with the MacBride Principles of nondiscrimination in employment.

69.1.3 Prospective **Contractors** are not required to agree to these conditions. However, in the case of **Contracts** let by competitive sealed bidding, whenever the lowest responsible bidder has not agreed to stipulate to the conditions set forth in this notice and another bidder who has agreed to stipulate to such conditions has submitted a bid within five (5%) percent of the lowest responsible bid for a **Contract** to supply goods, services or contraction of comparable quality, the **Agency** shall refer such bids to the Mayor, the Speaker or other officials, as appropriate, who may determine, in accordance with applicable **Law**, that it is in the best interest of the **City** that the **Contract** be awarded to other than the lowest responsible pursuant to Section 313(b)(2) of the **City** Charter.

69.1.4 In the case of **Contracts** let by other than competitive sealed bidding, if a prospective **Contractor** does not agree to these conditions, no **Agency**, elected official or the **City** Council shall award the **Contract** to that bidder unless the **Agency** seeking to use the goods, services or construction certifies in writing that the **Contract** is necessary for the **Agency** to perform its functions and there is no other responsible **Contractor** who will supply goods, services or construction of comparable quality at a comparable price.

69.2 In accordance with Section 6-115.1 of the Administrative Code, the **Contractor** stipulates that such **Contractor** and any individual or legal entity in which the **Contractor** holds a ten (10%) percent or greater ownership interest in the **Contractor** either:

69.2.1 Have no business operations in Northern Ireland, or

69.2.2 Shall take lawful steps in good faith to conduct any business operations they have in Northern Ireland in accordance with the MacBride Principles, and shall permit independent monitoring of their compliance with such principles.

69.3 For purposes of this Article, the following terms shall have the following meanings:

69.3.1 "MacBride Principles" shall mean those principles relating to nondiscrimination in employment and freedom of work-place opportunity which require employers doing business in Northern Ireland to:

69.3.1(a) increase the representation of individuals from under-represented religious groups in the workforce, including managerial, supervisory, administrative, clerical and technical jobs;

69.3.1(b) take steps to promote adequate security for the protection of employees from under-represented religious groups both at the work-place and while traveling to and from **Work**;

69.3.1(c) ban provocative religious or political emblems from the workplace;

69.3.1(d) publicly advertise all job openings and make special recruitment efforts to attract applicants from under-represented religious groups;

69.3.1(e) establish layoff, recall, and termination procedures which do not in practice favor a particular religious group;

69.3.1(f) abolish all job reservations, apprenticeship restrictions and different employment criteria which discriminate on the basis of religion;

69.3.1(g) develop training programs that will prepare substantial numbers of current employees from under-represented religious groups for skilled jobs, including the expansion of existing programs and the creation of new programs to train, upgrade, and improve the skills of workers from under-represented religious groups;

69.3.1(h) establish procedures to asses, identify, and actively recruit employees from under-represented religious groups with potential for further advancement; and

69.3.1(i) appoint a senior management staff member to oversee affirmative action efforts and develop a timetable to ensure their full implementation.

69.4 The **Contractor** agrees that the covenants and representations in Article 69.2 are material conditions to this **Contract**. In the event the **Agency** receives information that the **Contractor** who made the stipulation required by this Article 69 is in violation thereof, the **Agency** shall review such information and give the **Contractor** an opportunity to respond. If the **Agency** finds that a violation has occurred, the **Agency** shall have the right to declare the **Contractor** in default in default and/or terminate this **Contract** for cause and procure supplies, services or **Work** from another source in the manner the **Agency** deems proper. In the event of such termination, the **Contractor** shall pay to the **Agency**, or the **Agency** in its sole discretion may withhold from any amounts otherwise payable to the **Contractor**, the difference between the **Contract** price for the uncompleted portion of this **Contract** and the cost to the **Agency** of completing performance of this **Contract** either itself or by engaging another **Contractor** or **Contractors**. In the case of a requirement **Contract**, the **Contractor** shall be liable for such difference in price for the entire amount of supplies required by the **Agency** for the uncompleted term of **Contractor's Contract**. In the case of a construction **Contract**, the **Agency** shall also have the right to hold the **Contractor** in partial or total default in accordance with the default provisions of this **Contract**, and/or may seek debarment or suspension of the **Contractor**. The rights and remedies of the **Agency** hereunder shall be in addition to, and not in lieu of, any rights and remedies the **Agency** has pursuant to this **Contract** or by operation of **Law**.

ARTICLE 70. ELECTRONIC FILING/NYC DEVELOPMENT HUB

70.1 The **Contractor** shall electronically file all alteration type-2 and alteration type-3 applications via the New York City Development Hub Web site, except applications for the following types of minor alterations: enlargements, curb cuts, legalizations, fire alarms, builders pavement plans, and jobs filed on Landmark Preservation Commission calendared properties. All such filings must be professionally certified. Information about electronic filing via the New York City Development Hub is available on the **City** Department of Buildings Web site at www.nyc.gov/buildings.

ARTICLE 71. PROHIBITION OF TROPICAL HARDWOODS

71.1 Tropical hardwoods, as defined in Section 165 of the New York State Finance Law (Finance Law), shall not be utilized in the performance of this **Contract** except as expressly permitted by Section 165 of the Finance Law.

ARTICLE 72. CONFLICTS OF INTEREST

72.1 Section 2604 of the **City** Charter and other related provisions of the **City** Charter, the Administrative Code, and the Penal Law are applicable under the terms of this **Contract** in relation to conflicts of interest and shall be extended to **Subcontractors** authorized to perform **Work**, labor and services pursuant to this **Contract** and further, it shall be the duty and responsibility of the **Contractor** to so inform its respective **Subcontractors**. Notice is hereby given that, under certain circumstances, penalties may be invoked against the donor as well as the recipient of any form of valuable gift.

ARTICLE 73. MERGER CLAUSE

73.1 The written **Contract** herein, contains all the terms and conditions agreed upon by the parties hereto, and no other agreement, oral or otherwise, regarding the subject matter of this **Contract** shall be deemed to exist or to bind any of the parties hereto, or to vary any of the terms contained herein.

ARTICLE 74. STATEMENT OF WORK

74.1 The **Contractor** shall furnish all labor and materials and perform all **Work** in strict accordance with the **Specifications** and **Addenda** thereto, numbered as shown in Schedule A.

ARTICLE 75. COMPENSATION TO BE PAID TO CONTRACTOR

75.1 The **City** will pay and the **Contractor** will accept in full consideration for the performance of the **Contract**, subject to additions and deductions as provided herein, the total sum shown in Schedule A, this said sum being the amount at which the **Contract** was awarded to the **Contractor** at a public letting thereof, based upon the **Contractor's** bid for the **Contract**.

ARTICLE 76. ELECTRONIC FUNDS TRANSFER

76.1 In accordance with Section 6-107.1 of the Administrative Code, the **Contractor** agrees to accept payments under this **Contract** from the **City** by electronic funds transfer (EFT). An EFT is any

transfer of funds, other than a transaction originated by check, draft or similar paper instrument, which is initiated through an electronic terminal, telephonic instrument or computer or magnetic tape so as to order, instruct or authorize a financial institution to debit or credit an account. Prior to the first payment made under this **Contract**, the **Contractor** shall designate one financial institution or other authorized payment agent and shall complete the attached "EFT Vendor Payment Enrollment Form" in order to provide the Commissioner of the **City** Department of Finance with information necessary for the **Contractor** to receive electronic funds transfer payments through a designated financial institution or authorized payment agent. The crediting of the amount of a payment to the appropriate account on the books of a financial institution or other authorized payment agent designated by the **Contractor** shall constitute full satisfaction by the **City** for the amount of the payment under this **Contract**. The account information supplied by the **Contractor** to facilitate the electronic funds transfer shall remain confidential to the fullest extent provided by **Law**.

76.2 The **Commissioner** may waive the application of the requirements of this Article 76 to payments on contracts entered into pursuant to Section 315 of the **City** Charter. In addition, the Commissioner of the Department of Finance and the Comptroller may jointly issue standards pursuant to which the **Agency** may waive the requirements of this Article 76 for payments in the following circumstances: (i) for individuals or classes of individuals for whom compliance imposes a hardship; (ii) for classifications or types of checks; or (iii) in other circumstances as may be necessary in the interest of the **City**.

ARTICLE 77. RECORDS RETENTION

77.1 The **Contractor** agrees to retain all books, records, and other documents relevant to this **Contract** for six years after the final payment or termination of this **Contract**, whichever is later. **City**, state, and federal auditors and any other persons duly authorized by the **City** shall have full access to and the right to examine any such books, records, and other documents during the retention period.

ARTICLE 78. EXAMINATION AND VIEWING OF SITE, CONSIDERATION OF OTHER SOURCES OF INFORMATION AND CHANGED SITE CONDITIONS

78.1 Pre-Bidding (Investigation) Viewing of Site – Bidders must carefully view and examine the **Site** of the proposed **Work**, as well as its adjacent area, and seek other usual sources of information, for they will be conclusively presumed to have full knowledge of any and all conditions and hazards on, about or above the **Site** relating to or affecting in any way the performance of the **Work** to be done under the **Contract** that were or should have been known by a reasonably prudent bidder. To arrange a date for visiting the **Site**, bidders are to contact the **Agency** contact person specified in the bid documents.

78.2 Should the **Contractor** encounter during the progress of the Work site conditions or environmental hazards at the **Site** materially differing from any shown on the **Contract Drawings** or indicated in the **Specifications** or such conditions or environmental hazards as could not reasonably have been anticipated by the **Contractor**, which conditions or hazards will materially affect the cost of the **Work** to be done under the **Contract**, the attention of the **Commissioner** must be called immediately to such conditions or hazards before they are disturbed. The **Commissioner** shall thereupon promptly investigate the conditions or hazards. If the **Commissioner** finds that they do so materially differ, and that they could not have been reasonably anticipated by the **Contractor**, the **Contract** may be modified with the **Commissioner**'s written approval.

ARTICLE 79. PARTICIPATION BY MINORITY-OWNED AND WOMEN-OWNED BUSINESS ENTERPRISES IN CITY PROCUREMENT

NOTICE TO ALL PROSPECTIVE CONTRACTORS

ARTICLE I. M/WBE PROGRAM

Local Law No. 129 of 2005 added and Local Law 1 of 2013 amended Section 6-129 of the Administrative Code of the City of New York (hereinafter "Section 6-129"). Section 6-129 establishes the program for participation in City procurement ("M/WBE Program") by minority- owned business enterprises ("MBEs") and women-owned business enterprises ("WBEs"), certified in accordance with Section 1304 of the New York City Charter. As stated in Section 6-129, the intent of the program is to address the impact of discrimination on the City's procurement process, and to promote the public interest in avoiding fraud and favoritism in the procurement process, increasing competition for City business, and lowering contract costs. The contract provisions contained herein are pursuant to Section 6-129, and the rules of the Department of Small Business Services ("DSBS") promulgated thereunder.

If this Contract is subject to the M/WBE Program established by Section 6-129, the specific requirements of MBE and/or WBE participation for this Contract are set forth in Schedule B of the Contract (entitled the "M/WBE Utilization Plan"), and are detailed below. The Contractor must comply with all applicable MBE and WBE requirements for this Contract.

All provisions of Section 6-129 are hereby incorporated in the Contract by reference and all terms used herein that are not defined herein shall have the meanings given such terms in Section 6-129. Article I, Part A, below, sets forth provisions related to the participation goals for construction, standard and professional services contracts. Article I, Part B, below, sets forth miscellaneous provisions related to the M/WBE Program.

PART A

PARTICIPATION GOALS FOR CONSTRUCTION, STANDARD AND PROFESSIONAL SERVICES CONTRACTS OR TASK ORDERS

1. The **MBE and/or WBE Participation Goals** established for this Contract or Task Orders issued pursuant to this Contract, ("**Participation Goals**"), as applicable, are set forth on Schedule B, Part I to this Contract (see Page 1, line 1 Total Participation Goals) or will be set forth on Schedule B, Part I to Task Orders issued pursuant to this Contract, as applicable.

The **Participation Goals** represent a percentage of the total dollar value of the Contract or Task Order, as applicable, that may be achieved by awarding subcontracts to firms certified with New York City Department of Small Business Services as MBEs and/or WBEs, and/or by crediting the participation of prime contractors and/or qualified joint ventures as provided in Section 3 below, unless the goals have been waived or modified by Agency in accordance with Section 6-129 and Part A, Sections 10 and 11 below, respectively.

2. If **Participation Goals** have been established for this Contract or Task Orders issued pursuant to this Contract, Contractor agrees or shall agree as a material term of the Contract that Contractor shall be subject to the **Participation Goals**, unless the goals are waived or modified by Agency in accordance with Section 6-129 and Part A, Sections 10 and 11 below, respectively.

3. If **Participation Goals** have been established for this Contract or Task Order issued pursuant to this Contract, a Contractor that is an MBE and/or WBE shall be permitted to count its own participation toward fulfillment of the relevant **Participation Goal**, provided that in accordance with Section 6-129 the value of Contractor's participation shall be determined by subtracting from the total value of the Contract or Task Order, as applicable, any amounts that the Contractor pays to direct subcontractors (as defined in Section 6-129(c)(13)), and provided further that a Contractor that is certified as both an MBE and a WBE may count its own participation either toward the goal for MBEs or the goal for WBEs, but not both.

A Contractor that is a qualified joint venture (as defined in Section 6-129(c)(30)) shall be permitted to count a percentage of its own participation toward fulfillment of the relevant **Participation Goal**. In accordance with Section 6-129, the value of Contractor's participation shall be determined by subtracting from the total value of the Contract or Task Order, as applicable, any amounts that Contractor pays to direct subcontractors, and then multiplying the remainder by the percentage to be applied to total profit to determine the amount to which an MBE or WBE is entitled pursuant to the joint venture agreement, provided that where a participant in a joint venture is certified as both an MBE and a WBE, such amount shall be counted either toward the goal for MBEs or the goal for WBEs, but not both.

4. A. If **Participation Goals** have been established for this Contract, a prospective contractor shall be required to submit with its bid or proposal, as applicable, a completed Schedule B, M/WBE Utilization Plan, Part II (see Pages 2-4) indicating: (a) whether the contractor is an MBE or WBE, or qualified joint venture; (b) the percentage of work it intends to award to direct subcontractors; and (c) in cases where the contractor intends to award direct subcontracts, a description of the type and dollar value of work designated for participation by MBEs and/or WBEs, and the time frames in which such work is scheduled to begin and end. In the event that this M/WBE Utilization Plan indicates that the bidder or proposer, as applicable, does not intend to meet the **Participation Goals**, the bid or proposal, as applicable, shall be deemed non-responsive, unless Agency has granted the bidder or proposer, as applicable, a pre- award waiver of the Participation Goals in accordance with Section 6-129 and Part A, Section 10 below.

B. (i) If this Contract is for a master services agreement or other requirements type contract that will result in the issuance of Task Orders that will be individually registered ("Master Services Agreement") and is subject to M/WBE **Participation Goals**, a prospective contractor shall be required to submit with its bid or proposal, as applicable, a completed Schedule B, M/WBE Participation Requirements for Master Services Agreements That Will Require Individually Registered Task Orders, Part II (page 2) indicating the prospective contractor's certification and required affirmations to make all reasonable good faith efforts to meet participation goals established on each individual Task Order issued pursuant to this Contract, or if a partial waiver is obtained or such goals are modified by the Agency, to meet the modified **Participation Goals** by soliciting and obtaining the participation of certified MBE and/or WBE firms. In the event that the Schedule B indicates that the bidder or proposer, as applicable, does not intend to meet the **Participation Goals** that may be established on Task Orders issued pursuant to this Contract, the bid or proposal, as applicable, shall be deemed nonresponsive.

(ii) **Participation Goals** on a Master Services Agreement will be established for individual Task Orders issued after the Master Services Agreement is awarded. If **Participation Goals** have been established on a Task Order, a contractor shall be required to submit a Schedule B – M/WBE Utilization Plan For Independently Registered Task Orders That Are Issued Pursuant to Master Services Agreements, Part II (see Pages 2-4) indicating: (a) whether the contractor is an MBE or WBE, or qualified joint venture; (b) the percentage of work it intends to award to direct subcontractors; and (c) in cases where the contractor intends to award direct subcontracts, a description of the type and dollar value of work designated for participation by MBEs and/or WBEs, and the time frames in which such work is scheduled to begin and end. The contractor must engage in good faith efforts to meet the **Participation Goals** as established for the Task Order unless Agency has granted the contractor a pre-award waiver of the Participation Goals in accordance with Section 6-129 and Part A, Section 10 below.

C. THE BIDDER/PROPOSER MUST COMPLETE THE SCHEDULE B INCLUDED HEREIN (SCHEDULE B, PART II). A SCHEDULE B SUBMITTED BY THE BIDDER/PROPOSER WHICH DOES NOT INCLUDE THE VENDOR CERTIFICATION AND REQUIRED AFFIRMATIONS (SEE SECTION V OF PART II) WILL BE DEEMED TO BE NON-RESPONSIVE, UNLESS A FULL WAIVER OF THE PARTICIPATION GOALS IS GRANTED (SCHEDULE B, PART III). IN THE EVENT THAT THE CITY DETERMINES THAT THE BIDDER/PROPOSER HAS SUBMITTED A SCHEDULE B WHERE THE VENDOR CERTIFICATION AND REQUIRED AFFIRMATIONS ARE COMPLETED BUT OTHER ASPECTS OF THE SCHEDULE B ARE NOT COMPLETE, OR CONTAIN A COPY OR COMPUTATION ERROR THAT IS AT ODDS WITH THE VENDOR CERTIFICATION AND AFFIRMATIONS, THE BIDDER/PROPOSER WILL BE NOTIFIED BY THE AGENCY AND WILL BE GIVEN FOUR (4) CALENDAR DAYS FROM RECEIPT OF NOTIFICATION TO CURE THE SPECIFIED DEFICIENCIES AND RETURN A COMPLETED SCHEDULE B TO THE AGENCY. FAILURE TO DO SO WILL RESULT IN A DETERMINATION THAT THE BID/PROPOSAL IS NON-RESPONSIVE. RECEIPT OF NOTIFICATION IS DEFINED AS THE DATE NOTICE IS E-MAILED OR FAXED (IF THE BIDDER/PROPOSER HAS PROVIDED AN E-MAIL ADDRESS OR FAX NUMBER), OR NO LATER THAN FIVE (5) CALENDAR DAYS FROM THE DATE OF MAILING OR UPON DELIVERY, IF DELIVERED.

5. Where an **M/WBE** Utilization Plan has been submitted, the Contractor shall, within 30 days of issuance by Agency of a notice to proceed, submit a list of proposed persons or entities to which it intends to award subcontracts within the subsequent 12 months. In the case of multiyear contracts, such list shall also be submitted every year thereafter. The Agency may also require the Contractor to report periodically about the contracts awarded by its direct subcontractors to indirect subcontractors (as defined in Section 6-129(c)(22)). **PLEASE NOTE: If this Contract is a public works project subject to GML §101(5) (i.e., a contract valued at or below $3M for projects in New York City) or if the Contract is subject to a project labor agreement in accordance with Labor Law §222, and the bidder is required to identify at the time of bid submission its intended subcontractors for the Wicks trades (plumbing and gas fitting; steam heating, hot water heating, ventilating and air conditioning (HVAC); and electric wiring), the Contractor must identify all those to which it intends to award construction subcontracts for any portion of the Wicks trade work at the time of bid submission, regardless of what point in the life of the contract such subcontracts will occur. In identifying intended subcontractors in the bid submission, bidders may satisfy any Participation Goals established for this Contract by proposing one or more subcontractors that are MBEs and/or WBEs for any portion of the Wicks trade work.** In the event that the Contractor's selection of a subcontractor is disapproved, the Contractor shall have a reasonable time to propose alternate subcontractors.

6. MBE and WBE firms must be certified by DSBS in order for the Contractor to credit such firms' participation toward the attainment of the **Participation Goals**. Such certification must occur prior to the

firms' commencement of work. A list of MBE and WBE firms may be obtained from the DSBS website at www.nyc.gov/buycertified, by emailing DSBS at buyer@sbs.nyc.gov, by calling (212) 513-6356, or by visiting or writing DSBS at 110 William St., New York, New York, 10038, 7th floor. Eligible firms that have not yet been certified may contact DSBS in order to seek certification by visiting www.nyc.gov/getcertified, emailing MWBE@sbs.nyc.gov, or calling the DSBS certification helpline at (212) 513-6311. A firm that is certified as both an MBE and a WBE may be counted either toward the goal for MBEs or the goal for WBEs, but not both. No credit shall be given for participation by a graduate MBE or graduate WBE, as defined in Section 6-129(c)(20).

7. Where an **M/WBE** Utilization Plan has been submitted, the Contractor shall, with each voucher for payment, and/or periodically as Agency may require, submit statements, certified under penalty of perjury, which shall include, but not be limited to,: the total amount the Contractor paid to its direct subcontractors, and, where applicable pursuant to Section 6-129(j), the total amount direct subcontractors paid to indirect subcontractors; the names, addresses and contact numbers of each MBE or WBE hired as a subcontractor by the Contractor, and, where applicable, hired by any of the Contractor's direct subcontractors; and the dates and amounts paid to each MBE or WBE. The Contractor shall also submit, along with its voucher for final payment: the total amount it paid to subcontractors, and, where applicable pursuant to Section 6-129(j), the total amount its direct subcontractors paid directly to their indirect subcontractors; and a final list, certified under penalty of perjury, which shall include the name, address and contact information of each subcontractor that is an MBE or WBE, the work performed by, and the dates and amounts paid to each.

8. If payments made to, or work performed by, MBEs or WBEs are less than the amount specified in the Contractor's **M/WBE** Utilization Plan, Agency shall take appropriate action, in accordance with Section 6-129 and Article II below, unless the Contractor has obtained a modification of its **M/WBE** Utilization Plan in accordance with Section 6-129 and Part A, Section 11 below.

9. Where an **M/WBE** Utilization Plan has been submitted, and the Contractor requests a change order the value of which exceeds the greater of 10 percent of the Contract or Task Order, as applicable, or $500,000, Agency shall review the scope of work for the Contract or Task Order, as applicable, and the scale and types of work involved in the change order, and determine whether the **Participation Goals** should be modified.

10. Pre-award waiver of the **Participation Goals**. (a) A bidder or proposer, or contractor with respect to a Task Order, may seek a pre-award full or partial waiver of the **Participation Goals** in accordance with Section 6-129, which requests that Agency change one or more **Participation Goals** on the grounds that the **Participation Goals** are unreasonable in light of the availability of certified firms to perform the services required, or by demonstrating that it has legitimate business reasons for proposing a lower level of subcontracting in its M/WBE Utilization Plan.

(b) To apply for a full or partial waiver of the **Participation Goals**, a bidder, proposer, or contractor, as applicable, must complete Part III (Page 5) of Schedule B and submit such request no later than seven (7) calendar days prior to the date and time the bids, proposals, or Task Orders are due, in writing to the Agency by email at poped@ddc.nyc.gov or via facsimile at (718) 391-1886. Bidders, proposers, or contractors, as applicable, who have submitted requests will receive an Agency response by no later than two (2) calendar days prior to the due date for bids, proposals, or Task Orders; provided, however, that if that date would fall on a weekend or holiday, an Agency response will be provided by close-of-business on the business day before such weekend or holiday date.

(c) If the Agency determines that the **Participation Goals** are unreasonable in light of the availability of certified firms to perform the services required, it shall revise the solicitation and extend the deadline for bids and proposals, or revise the Task Order, as applicable.

(d) Agency may grant a full or partial waiver of the **Participation Goals** to a bidder, proposer or contractor, as applicable, who demonstrates—before submission of the bid, proposal or Task Order, as applicable—that it has legitimate business reasons for proposing the level of subcontracting in its **M/WBE** Utilization Plan. In making its determination, Agency shall consider factors that shall include, but not be limited to, whether the bidder, proposer or contractor, as applicable, has the capacity and the bona fide intention to perform the Contract without any subcontracting, or to perform the Contract without awarding the amount of subcontracts represented by the **Participation Goals**. In making such determination, Agency may consider whether the **M/WBE** Utilization Plan is consistent with past subcontracting practices of the bidder, proposer or contractor, as applicable, whether the bidder, proposer or contractor, as applicable, has made efforts to form a joint venture with a certified firm, and whether the bidder, proposer, or contractor, as applicable, has made good faith efforts to identify other portions of the Contract that it intends to subcontract.

11. Modification of **M/WBE** Utilization Plan. (a) A Contractor may request a modification of its **M/WBE** Utilization Plan after award of this Contract. **PLEASE NOTE: If this Contract is a public works project subject to GML §101(5) (i.e., a contract valued at or below $3M for projects in New York City) or if the Contract is subject to a project labor agreement in accordance with Labor Law §222, and the bidder is required to identify at the time of bid submission its intended subcontractors for the Wicks trades (plumbing and gas fitting; steam heating, hot water heating, ventilating and air conditioning (HVAC); and electric wiring), the Contractor may request a Modification of its M/WBE Utilization Plan as part of its bid submission.** The Agency may grant a request for Modification of a Contractor's **M/WBE** Utilization Plan if it determines that the Contractor has established, with appropriate documentary and other evidence, that it made reasonable, good faith efforts to meet the **Participation Goals.** In making such determination, Agency shall consider evidence of the following efforts, as applicable, along with any other relevant factors:

(i) The Contractor advertised opportunities to participate in the Contract, where appropriate, in general circulation media, trade and professional association publications and small business media, and publications of minority and women's business organizations;
(ii) The Contractor provided notice of specific opportunities to participate in the Contract, in a timely manner, to minority and women's business organizations;
(iii) The Contractor sent written notices, by certified mail or facsimile, in a timely manner, to advise MBEs or WBEs that their interest in the Contract was solicited;
(iv) The Contractor made efforts to identify portions of the work that could be substituted for portions originally designated for participation by MBEs and/or WBEs in the M/WBE Utilization Plan, and for which the Contractor claims an inability to retain MBEs or WBEs;
(v) The Contractor held meetings with MBEs and/or WBEs prior to the date their bids or proposals were due, for the purpose of explaining in detail the scope and requirements of the work for which their bids or proposals were solicited;
(vi) The Contractor made efforts to negotiate with MBEs and/or WBEs as relevant to perform specific subcontracts, or act as suppliers or service providers;
(vii) Timely written requests for assistance made by the Contractor to Agency's M/WBE liaison officer and to DSBS;
(viii) Description of how recommendations made by DSBS and Agency were acted upon and an explanation of why action upon such recommendations did not lead to the desired level of participation of MBEs and/or WBEs.

Agency's M/WBE officer shall provide written notice to the Contractor of the determination.

(b) The Agency may modify the **Participation Goals** when the scope of the work has been changed by the Agency in a manner that affects the scale and types of work that the Contractor indicated in its **M/WBE** Utilization Plan would be awarded to subcontractors.

12. If this Contract is for an indefinite quantity of construction, standard or professional services or is a requirements type contract and the Contractor has submitted an **M/WBE** Utilization Plan and has committed to subcontract work to MBEs and/or WBEs in order to meet the **Participation Goals**, the Contractor will not be deemed in violation of the M/WBE Program requirements for this Contract with regard to any work which was intended to be subcontracted to an MBE and/or WBE to the extent that the Agency has determined that such work is not needed.

13. If **Participation Goals** have been established for this Contract or a Task Order issued pursuant to this Contract, at least once annually during the term of the Contract or Task Order, as applicable, Agency shall review the Contractor's progress toward attainment of its M/WBE Utilization Plan, including but not limited to, by reviewing the percentage of work the Contractor has actually awarded to MBE and/or WBE subcontractors and the payments the Contractor made to such subcontractors.

14. If **Participation Goals** have been established for this Contract or a Task Order issued pursuant to this Contract, Agency shall evaluate and assess the Contractor's performance in meeting those goals, and such evaluation and assessment shall become part of the Contractor's overall contract performance evaluation.

PART B: MISCELLANEOUS

1. The Contractor shall take notice that, if this solicitation requires the establishment of an **M/WBE** Utilization Plan, the resulting contract may be audited by DSBS to determine compliance with Section 6-129. See §6-129(e)(10). Furthermore, such resulting contract may also be examined by the City's Comptroller to assess compliance with the **M/WBE** Utilization Plan.

2. Pursuant to DSBS rules, construction contracts that include a requirement for an **M/WBE** Utilization Plan shall not be subject to the law governing Locally Based Enterprises set forth in Section 6-108.1 of the Administrative Code of the City of New York.

3. DSBS is available to assist contractors and potential contractors in determining the availability of MBEs and/or WBEs to participate as subcontractors, and in identifying opportunities that are appropriate for participation by MBEs and/or WBEs in contracts.

4. Prospective contractors are encouraged to enter into qualified joint venture agreements with MBEs and/or WBEs as defined by Section 6-129(c)(30).

5. By submitting a bid or proposal the Contractor hereby acknowledges its understanding of the M/WBE Program requirements set forth herein and the pertinent provisions of Section 6-129, and any rules promulgated thereunder, and if awarded this Contract, the Contractor hereby agrees to comply with the M/WBE Program requirements of this Contract and pertinent provisions of Section 6-129, and any rules promulgated thereunder, all of which shall be deemed to be material terms of this Contract. The Contractor hereby agrees to make all reasonable, good faith efforts to solicit and obtain the participation of MBEs and/or WBEs to meet the required **Participation Goals**.

ARTICLE II. ENFORCEMENT

1. If Agency determines that a bidder or proposer, as applicable, has, in relation to this procurement, violated Section 6-129 or the DSBS rules promulgated pursuant to Section 6-129, Agency may disqualify such bidder or proposer, as applicable, from competing for this Contract and the Agency may revoke such bidder's or proposer's prequalification status, if applicable.

2. Whenever Agency believes that the Contractor or a subcontractor is not in compliance with Section 6-129 or the DSBS rules promulgated pursuant to Section 6-129, or any provision of this Contract that implements Section 6-129, including, but not limited to any **M/WBE** Utilization Plan, Agency shall send a written notice to the Contractor describing the alleged noncompliance and offering the Contractor an opportunity to be heard. Agency shall then conduct an investigation to determine whether such Contractor or subcontractor is in compliance.

3. In the event that the Contractor has been found to have violated Section 6-129, the DSBS rules promulgated pursuant to Section 6-129, or any provision of this Contract that implements Section 6-129, including, but not limited to, any **M/WBE** Utilization Plan, Agency may determine that one of the following actions should be taken:

(a) entering into an agreement with the Contractor allowing the Contractor to cure the violation;
(b) revoking the Contractor's pre-qualification to bid or make proposals for future contracts;
(c) making a finding that the Contractor is in default of the Contract;
(d) terminating the Contract;
(e) declaring the Contractor to be in breach of Contract;
(f) withholding payment or reimbursement;
(g) determining not to renew the Contract;
(h) assessing actual and consequential damages;
(i) assessing liquidated damages or reducing fees, provided that liquidated damages may be based on amounts representing costs of delays in carrying out the purposes of the M/WBE Program, or in meeting the purposes of the Contract, the costs of meeting utilization goals through additional procurements, the administrative costs of investigation and enforcement, or other factors set forth in the Contract;
(j) exercising rights under the Contract to procure goods, services or construction from another contractor and charge the cost of such contract to the Contractor that has been found to be in noncompliance; or
(k) taking any other appropriate remedy.

4. If an **M/WBE** Utilization Plan has been submitted, and pursuant to this Article II, Section 3, the Contractor has been found to have failed to fulfill its **Participation Goals** contained in its **M/WBE** Utilization Plan or the **Participation Goals** as modified by Agency pursuant to Article I, Part A, Section 11, Agency may assess liquidated damages in the amount of ten percent (10%) of the difference between the dollar amount of work required to be awarded to MBE and/or WBE firms to meet the **Participation Goals** and the dollar amount the Contractor actually awarded and paid, and/or credited, to MBE and/or WBE firms. In view of the difficulty of accurately ascertaining the loss which the City will suffer by reason of Contractor's failure to meet the **Participation Goals**, the foregoing amount is hereby fixed and agreed as the liquidated damages that the City will suffer by reason of such failure, and not as a penalty. Agency may deduct and retain out of any monies which may become due under this Contract the amount of any such liquidated damages; and in case the amount which may become due under this Contract shall be less than the amount of liquidated damages suffered by the City, the Contractor shall be liable to pay the difference.

5. Whenever Agency has reason to believe that an MBE and/or WBE is not qualified for certification, or is participating in a contract in a manner that does not serve a commercially useful function (as defined in Section 6-129(c)(8)), or has violated any provision of Section 6- 129, Agency shall notify the Commissioner of DSBS who shall determine whether the certification of such business enterprise should be revoked.

6. Statements made in any instrument submitted to Agency pursuant to Section 6-129 shall be submitted under penalty of perjury and any false or misleading statement or omission shall be grounds for the application of any applicable criminal and/or civil penalties for perjury. The making of a false or fraudulent statement by an MBE and/or WBE in any instrument submitted pursuant to Section 6-129 shall, in addition, be grounds for revocation of its certification.

7. The Contractor's record in implementing its **M/WBE** Utilization Plan shall be a factor in the evaluation of its performance. Whenever Agency determines that a Contractor's compliance with an **M/WBE** Utilization Plan has been unsatisfactory, Agency shall, after consultation with the City Chief Procurement Officer, file an advice of caution form for inclusion in VENDEX as caution data.

IN WITNESS WHEREOF, the Commissioner, on behalf of the City of New York, and the Contractor, have executed this agreement in quadruplicate, two parts of which are to remain with the Commissioner, another to be filed with the Comptroller of the City, and the fourth to be delivered to the Contractor.

THE CITY OF NEW YORK

By: _____
Commissioner

CONTRACTOR: INTER LA PERUTA JV

By: _____
(Member of Firm or Officer of Corporation)

Title: Partner

(Where Contractor is a Corporation, add):
Attest:

Mario Salerno
Secretary

(Seal)

_____

ACKNOWLEDGEMENT OF PRINCIPAL, IF A CORPORATION

State of New York County of _____ ss:

On this _____ day of _____, _____, before me personally came _____ to me known who, being by me duly sworn did depose and say that he resides at _____ _____ that he is the _____ of the corporation described in and which executed the foregoing instrument; that he knows the seal of said corporation; that one of the seals affixed to said instrument is such seal; that it was so affixed by order of the directors of said corporation, and that he signed his name thereto by like order.

_____
Notary Public or Commissioner of Deeds

ACKNOWLEDGEMENT OF PRINCIPAL, IF A PARTNERSHIP

State of New York County of Queens ss:

On this 12 day of June, 2018, before me personally appeared Michael Mutine to me known, and known to me to be one of the members of the firm of Inter Carpentry IV _____ described in and who executed the foregoing instrument; and he acknowledged to me that he executed the same as and for the act and deed of said firm.

VICTORIA AYO-VAUGHAN
Notary Public, State of New York
Registration #01AY5014042
Qualified in Queens County
Commission Expires July 15, 2019

_____
Notary Public or Commissioner of Deeds

ACKNOWLEDGEMENT OF PRINCIPAL, IF AN INDIVIDUAL

State of _____ County of _____ ss:

On this _____ day of _____, _____, before me personally appeared _____ to me known, and known to me to be the person described in and who executed the foregoing instrument; and acknowledged that he executed the same.

_____
Notary Public or Commissioner of Deeds

IN WITNESS WHEREOF, the Commissioner, on behalf of the City of New York, and the Contractor, have executed this agreement in quadruplicate, two parts of which are to remain with the Commissioner, another to be filed with the Comptroller of the City, and the fourth to be delivered to the Contractor.

THE CITY OF NEW YORK

By: _____
Commissioner

CONTRACTOR: INTER LA PERUTA JV

By: _____
(Member of Firm or Officer of Corporation)

Title: Partner

(Where Contractor is a Corporation, add):
Attest:

_____
Secretary

(Seal)

_____

ACKNOWLEDGEMENT OF PRINCIPAL, IF A CORPORATION

State of _____ County of _____ ss:

On this _____ day of _____, _____, before me personally came Mario La Peruta to me known who, being by me duly sworn did depose and say that he resides at Morganville, New Jersey, that he is the Partner of the corporation described in and which executed the foregoing instrument; that he knows the seal of said corporation; that one of the seals affixed to said instrument is such seal; that it was so affixed by order of the directors of said corporation, and that he signed his name thereto by like order.

_____
Notary Public or Commissioner of Deeds

ACKNOWLEDGEMENT OF PRINCIPAL, IF A PARTNERSHIP

State of New York County of Queens ss:

On this 12 day of June, 2018 before me personally appeared Mario La Peruta to me known, and known to me to be one of the members of the firm of Inter La Peruta described in and who executed the foregoing instrument; and he acknowledged to me that he executed the same as and for the act and deed of said firm.

VICTORIA AYO-VAUGHAN
Notary Public, State of New York
Registration #01AY5014042
Qualified in Queens County
Commission Expires July 15, 20

_____
Notary Public or Commissioner of Deeds

ACKNOWLEDGEMENT OF PRINCIPAL, IF AN INDIVIDUAL

State of _____ County of _____ ss:

On this _____ day of _____, _____, before me personally appeared _____ to me known, and known to me to be the person described in and who executed the foregoing instrument; and acknowledged that he executed the same.

_____
Notary Public or Commissioner of Deeds

ACKNOWLEDGEMENT BY COMMISSIONER

State of New York County of Queens ss:

On this 13th day of June, 2018, before me personally came Eric Macfarlane to me known, and known to be the Deputy Commissioner of the Department of Design and Construction of The City of New York, the person described as such in and who as such executed the foregoing instrument and acknowledged to me that he executed the same as Deputy Commissioner for the purposes therein mentioned.

Notary Public or Commissioner of Deeds

VICTORIA AYO-VAUGHAN
Notary Public, State of New York
Registration #01AY5014042
Qualified in Queens County
Commission Expires July 15, 2019

AUTHORITY

MAYOR'S CERTIFICATE NO. CBX DATED
BUDGET DIRECTOR'S CERTIFICATE NO. DATED

APPROPRIATION
COMMISSIONER'S CERTIFICATE

In conformity with the provisions of Section 6-101 of the Administrative Code of the City of New York, it is hereby certified that the estimated cost of the work, materials and supplies required by the within Contract, amounting to

Eight million, nine hundred ninety-six thousand, four hundred seventy-five dollars and thirty-five cents

Dollars ($ 8,996,475.35)

is chargeable to the fund of the Department of Design and Construction entitled Code

_____

_____

_____
Department of Design and Construction

I hereby certify that the specifications contained herein comply with the terms and conditions of the BUDGET.

Commissioner

COMPTROLLER'S CERTIFICATE

The City of New York_____

Pursuant to the provisions of Section 6-101 of the Administrative Code of the City of New York, I hereby certify that there remains unapplied and unexpended a balance of the above mentioned fund applicable to this Contract sufficient to pay the estimated expense of executing the same viz:

$_____

_____
Comptroller

MAYOR'S CERTIFICATE OR CERTIFICATE OF THE DIRECTOR OF THE BUDGET

<u>Performance Bond #1 (Pages 100 to 103)</u>: Use if the total contract price is $5 Million Or Less. Performance Bond #1 has been approved by the U.S. Small Business Administration ("SBA") for participation in its Bond Guarantee Program.

PERFORMANCE BOND #1

KNOW ALL PERSONS BY THESE PRESENTS:,
That we, _____

_____

_____

hereinafter referred to as the "Principal,"
and, _____

_____

_____

hereinafter referred to as the "Surety" ("Sureties") are held and firmly bound to THE CITY OF NEW YORK, hereinafter referred to as the "City" or to its successors and assigns in the penal sum
of _____

_____

_____

($_____) Dollars, lawful money of the United States for the payment of which said sum of money well and truly to be made, we, and each of us, bind ourselves, our heirs, executors, administrators, successors and assigns, jointly and severally, firmly by these presents.

WHEREAS, the Principal is about to enter, or has entered, into a Contract in writing with the City for

_____

_____

a copy of which Contract is annexed to and hereby made a part of this bond as though herein set forth in full;

NOW, THEREFORE, the conditions of this obligation are such that if the Principal, his or its representatives or assigns, shall well and faithfully perform the said Contract and all modifications, amendments, additions and alterations thereto that may hereafter be made, according to its terms and its true intent and meaning, including repair and or replacement of defective work and guarantees of maintenance for the periods stated in the Contract, and shall fully indemnify and save harmless the City from all cost and damage which it may suffer by reason of the Principal's default of the Contract, and shall fully reimburse and repay the City for all outlay and expense which the City may incur in making

good any such default and shall protect the said City of New York against, and pay any and all amounts, damages, cost and judgments which may or shall be recovered against said City or its officers or agents or which the said City of New York may be called upon to pay any person or corporation by reason of any damages arising or growing out of the Principal's default of the Contract, then this obligation shall be null and void, otherwise to remain in full force and effect.

The Surety (Sureties), for value received, hereby stipulates and agrees, upon written notice from the City that the City has determined that the Principal is in default of the Contract, to (1) pay the City the cost to complete the contract as determined by the City in excess of the balance of the Contract held by the City, plus any damages or costs to which the City is entitled, up to the full amount of the above penal sum, (2) fully perform and complete the Work to be performed under the Contract, pursuant to the terms, conditions, and covenants thereof, or (3) tender a completion Contractor that is acceptable to the City. The Surety (Sureties) further agrees, at its option, either to notify the City that it elects to pay the city the cost of completion plus any applicable damages and costs under option (1) above, or to commence and diligently perform the Work specified in the Contract, including physical site work, within twenty-five (25) business days after written notice thereof from the City and, if the Surety elects to fully perform and complete the Work, then to complete all Work within the time set forth in the Contract or such other time as agreed to between the City and Surety in accordance with the Contract. If the Surety elects to tender payment pursuant to (1) above, then the Surety shall tender such amount within fifteen (15) business days notification from the City of the cost of completion. The Surety and the City reserve all rights and defenses each may have against the other; provided, however, that the Surety expressly agrees that its reservation of rights shall not provide a basis for non-performance of its obligation to pay the City the cost of completion, to commence and complete all Work as provided herein, or to tender a completion contractor.

The Surety (Sureties), for value received, for itself and its successors and assigns, hereby stipulates and agrees that the obligation of said Surety (Sureties) and its bond shall be in no way impaired or affected by any extension of time, modification, omission, addition, or change in or to the said Contract or the Work to be performed thereunder, or by any payment thereunder before the time required therein, or by any waiver of any provisions thereof, or any moneys due or to become due thereunder; and said Surety (Sureties) does hereby waive notice of any and all of such extensions, modifications, omissions, additions, changes, payments, and waivers, and hereby expressly stipulates and agrees that any and all things done and omitted to be done by and in relation to subcontractors shall have the same effect as to said Surety (Sureties) as though done or omitted to be done by or in relation to said Principal. Notwithstanding the above, if the City makes payments to the Principal before the time required by the contract that in the aggregate exceed $100,000 or 10% of the Contract price, whichever is less, and that have not become earned prior to the Principal being found to be in default, then all payments made to the Principal before the time required by the Contract shall be added to the remaining contract value available to be paid for the completion of the Contract as if such sums had not been paid to the Principal, but shall not provide a basis for non-performance of its obligation to pay the City the cost of completion, to commence and to complete all Work as provided herein, or to tender a completion contractor.

<u>Performance Bond #1 (Pages 100 to 103)</u>: Use if the total contract price is $5 Million Or Less. Performance Bond #1 has been approved by the U.S. Small Business Administration ("SBA") for participation in its Bond Guarantee Program.

IN WITNESS WHEREOF, The Principal and the Surety (Sureties) have hereunto set their hands and seals, and such of them as are corporations have caused their corporate seals to be hereunto affixed and these presents to be signed by their proper officers, this

_____ day of _____, 20_____.

(Seal)

_____(L.S.)
Principal

By:_____.

(Seal)

Surety

By:_____.
_____.

(Seal)

Surety

By:_____.
_____.

(Seal)

Surety

By:_____.
_____.

(Seal)

Surety

By:_____.
_____.

(Seal)

Surety

By:_____.

Bond Premium Rate _____.

Bond Premium Cost _____.

If the Contractor (Principal) is a partnership, the bond should be signed by each of the individuals who are partners.

If the Contractor (Principal) is a corporation, the bond should be signed in its correct corporate name by a duly authorized officer, agent, or attorney-in-fact.

There should be executed an appropriate number of counterparts of the bond corresponding to the number of counterparts of the Contract.

Performance Bond #1 (Pages 100 to 103): Use if the total contract price is $5 Million Or Less. Performance Bond #1 has been approved by the U.S. Small Business Administration ("SBA") for participation in its Bond Guarantee Program.m.

ACKNOWLEDGMENT OF PRINCIPAL IF A CORPORATION

State of _____ County of _____ ss:

On this _____ day of _____, 20_____ before me personally came _____,
to me known, who, being by me duly sworn did depose and say that he/she resides at _____
_____; that he/she is the _____
of the corporation described in and which executed the foregoing instrument; and that he/she signed his/her name to the foregoing instrument by order of the directors of said corporation as the duly authorized and binding act thereof.

_____
Notary Public or Commissioner of Deeds.

ACKNOWLEDGMENT OF PRINCIPAL IF A PARTNERSHIP

State of _____ County of _____ ss:

On this _____ day of _____, 20 _____ before me personally came _____,
to me known, who, being by me duly sworn did dispose and say that he/she resides at _____
_____; that he/she is _____ partner of _____, a limited/general partnership existing under the laws of the State of _____, the partnership described in and which executed the foregoing instrument; and that he/she signed his/her name to the foregoing instrument as the duly authorized and binding act of said partnership.

_____
Notary Public or Commissioner of Deeds.

ACKNOWLEDGMENT OF PRINCIPAL IF AN INDIVIDUAL

State of _____ County of _____ ss:

On this _____ day of _____, 20_____ before me personally came _____,
to me known, who,.being by me duly sworn did depose and say that he/she resides at _____
_____, and that he/she is the individual whose name is subscribed to the within instrument and acknowledged to me that by his/her signature on the instrument, said individual executed the instrument.

_____
Notary Public or Commissioner of Deeds

Each executed bond should be accompanied by: (a) appropriate acknowledgments of the respective parties; (b) appropriate duly certified copy of Power of Attorney or other certificate of authority where bond is executed by agent, officer or other representative of Principal or Surety; (c) a duly certified extract from By-Laws or resolutions of Surety under which Power of Attorney or other certificate of authority of its agent, officer or representative was issued, and (d) certified copy of latest published financial statement of assets and liabilities of Surety.

* * * * * * * *

Affix Acknowledgments and Justification of Sureties.

Performance Bond #2 (Pages 104 to 107): Use if the total contract price is more than $5 Million.

PERFORMANCE BOND #2

KNOW ALL PERSONS BY THESE PRESENTS:,
That we, Inter LaPeruta JV

35 Colonial Place, Mount Vernon, NY 10550

hereinafter referred to as the "Principal,"
and, Western Surety Company

P.O. Box 5077, Sioux Falls, SD 57117-5077

hereinafter referred to as the "Surety" ("Sureties") are held and firmly bound to THE CITY OF NEW YORK, hereinafter referred to as the "City" or to its successors and assigns in the penal sum of Eight Million Nine Hundred Ninety Six Thousand Four Hundred Seventy Five and 35/100

($ 8,996,475.35) **Dollars, lawful money of the United States for the payment of which said sum of money well and truly to be made, we, and each of us, bind ourselves, our heirs, executors, administrators, successors and assigns, jointly and severally, firmly by these presents.**

WHEREAS, the Principal is about to enter, or has entered, into a Contract in writing with the City for

FMS ID: SEQ200531. E-PIN: 85018B0059001 DDC PIN: 8502018SE0015C Storm Sewer

Extensions in 239th Street Between 87th Avenue and 88th Avenue ETC. Borough of Queens, City of New York.

a copy of which Contract is annexed to and hereby made a part of this bond as though herein set forth in full;

NOW, THEREFORE, the conditions of this obligation are such that if the Principal, his or its representatives or assigns, shall well and faithfully perform the said Contract and all modifications, amendments, additions and alterations thereto that may hereafter be made, according to its terms and its true intent and meaning, including repair and or replacement of defective work and guarantees of maintenance for the periods stated in the Contract, and shall fully indemnify and save harmless the City from all cost and damage which it may suffer by reason of the Principal's default of the Contract, and shall fully reimburse and repay the City for all outlay and expense which the City may incur in making

<u>Performance Bond #2 (Pages 104 to 107)</u>: Use if the total contract price is more than $5 Million.

good any such default and shall protect the said City of New York against, and pay any and all amounts, damages, cost and judgments which may or shall be recovered against said City or its officers or agents or which the said City of New York may be called upon to pay any person or corporation by reason of any damages arising or growing out of the Principal's default of the Contract, then this obligation shall be null and void, otherwise to remain in full force and effect.

The Surety (Sureties), for value received, hereby stipulates and agrees, upon written notice from the City that the City has determined that the Principal is in default of the Contract, to either (1) pay the full amount of the above penal sum in complete discharge and exoneration of this bond and of all the liabilities of the Surety relating to this bond, or (2) fully perform and complete the Work to be performed under the Contract, pursuant to the terms, conditions, and covenants thereof. The Surety (Sureties) further agrees, at its option, either to tender the penal sum or to commence and diligently perform the Work specified in the Contract, including physical site work, within twenty-five (25) business days after written notice thereof from the City and to complete all Work within the time set forth in the Contract or such other time as agreed to between the City and Surety in accordance with the Contract. The Surety and the City reserve all rights and defenses each may have against the other; provided, however, that the Surety expressly agrees that its reservation of rights shall not provide a basis for non-performance of its obligation to commence and to complete all Work as provided herein.

The Surety (Sureties), for value received, for itself and its successors and assigns, hereby stipulates and agrees that the obligation of said Surety (Sureties) and its bond shall be in no way impaired or affected by any extension of time, modification, omission, addition, or change in or to the said Contract or the Work to be performed thereunder, or by any payment thereunder before the time required therein, or by any waiver of any provisions thereof, or by any assignment, subletting or other transfer thereof or of any Work to be performed or any moneys due or to become due thereunder; and said Surety (Sureties) does hereby waive notice of any and all of such extensions, modifications, omissions, additions, changes, payments, waivers, assignments, subcontracts and transfers, and hereby expressly stipulates and agrees that any and all things done and omitted to be done by and in relation to assignees, subcontractors, and other transferees shall have the same effect as to said Surety (Sureties) as though done or omitted to be done by or in relation to said Principal.

Performance Bond #2 (Pages 104 to 107): Use if the total contract price is more than $5 Million.

IN WITNESS WHEREOF, The Principal and the Surety (Sureties) have hereunto set their hands and seals, and such of them as are corporations have caused their corporate seals to be hereunto affixed and these presents to be signed by their proper officers, this

31st day of May 20 18.

(Seal)

Inter LaPeruta JV (L.S.)

Principal

By: _____.

(Seal)

Surety

By: _____.

Western Surety Company _____.

(Seal)

Surety

By: _____.

Dana Granice, Attorney-In-Fact _____.

(Seal)

Surety

By: _____.

_____.

(Seal)

Surety

By: _____.

_____.

(Seal)

Surety

By: _____.

Bond Premium Rate _____.

Bond Premium Cost _____.

If the Contractor (Principal) is a partnership, the bond should be signed by each of the individuals who are partners.

If the Contractor (Principal) is a corporation, the bond should be signed in its correct corporate name by a duly authorized officer, agent, or attorney-in-fact.

There should be executed an appropriate number of counterparts of the bond corresponding to the number of counterparts of the Contract.

Performance Bond #2 (Pages 104 to 107): Use if the total contract price is more than $5 Million.

ACKNOWLEDGMENT OF PRINCIPAL IF A CORPORATION

State of _____ County of _____ ss:

On this _____ day of _____, 20 _____ before me personally came _____,
to me known, who, being by me duly sworn did depose and say that he resides at _____

_____; that he/she is the _____
of the corporation described in and which executed the foregoing instrument; that he/she signed his/her name to the foregoing instrument by order of the directors of said corporation as the duly authorized and binding act thereof.

_____
Notary Public or Commissioner of Deeds.

ACKNOWLEDGMENT OF PRINCIPAL IF A PARTNERSHIP

State of _____ County of _____ ss:

On this _____ day of _____, 20 _____ before me personally came _____,
to me known, who, being by me duly sworn did depose and say that he/she resides at _____

_____; that he/she is _____ partner of _____, a limited/general partnership existing under the laws of the State of _____, the partnership described in and which executed the foregoing instrument; and that he/she signed his/her name to the foregoing instrument as the duly authorized and binding act of said partnership.

_____
Notary Public or Commissioner of Deeds

ACKNOWLEDGMENT OF PRINCIPAL IF AN INDIVIDUAL

State of _____ County of _____ ss:

On this _____ day of _____, 20_____ before me personally came _____,
to me known, who, being by me duly sworn did depose and say that he/she resides at _____

_____, and that he/she is the individual whose name is subscribed to the within instrument and acknowledged to me that by his/her signature on the instrument, said individual executed the instrument.

_____
Notary Public or Commissioner of Deeds

Each executed bond should be accompanied by: (a) appropriate acknowledgments of the respective parties; (b) appropriate duly certified copy of Power of Attorney or other certificate of authority where bond is executed by agent, officer or other representative of Principal or Surety; (c) a duly certified extract from By-Laws or resolutions of Surety under which Power of Attorney or other certificate of authority of its agent, officer or representative was issued, and (d) certified copy of latest published financial statement of assets and liabilities of Surety.

* * * * * * * *

Affix Acknowledgments and Justification of Sureties.

Acknowledgment by Principal

State of New York }
County of Queens }

On this 4th day of June 20 18, personally appeared before me Michael Mutino member of the firm/Joint Venture of Inter LaPeruta JV to me known and known to me to be the individual described in and who executed the foregoing instrument and he acknowledged to me that he executed the same for an on behalf of said firm/Joint Venture.

Sworn before me this 4th day of June 20 18

Elizabeth L

Notary Public

Elizabeth Leichnam
Notary Public, State of New York
No. [illegible]
Qualified in [illegible] County
Commission Expires June 7, 2018

Western Surety Company

POWER OF ATTORNEY APPOINTING INDIVIDUAL ATTORNEY-IN-FACT

Know All Men By These Presents, That WESTERN SURETY COMPANY, a South Dakota corporation, is a duly organized and existing corporation having its principal office in the City of Sioux Falls, and State of South Dakota, and that it does by virtue of the signature and seal herein affixed hereby make, constitute and appoint

Gerard S Macholz, Camille Maitland, Rita Sagistano, Robert T Pearson, Thomas Bean, Susan Lupski, George O Brewster, Michelle Wannamaker, Desiree Cardlin, Colette R Chisholm, Vincent A Walsh, Dana Granice, Individually

of Uniondale, NY, its true and lawful Attorney(s)-in-Fact with full power and authority hereby conferred to sign, seal and execute for and on its behalf bonds, undertakings and other obligatory instruments of similar nature

- In Unlimited Amounts -

and to bind it thereby as fully and to the same extent as if such instruments were signed by a duly authorized officer of the corporation and all the acts of said Attorney, pursuant to the authority hereby given, are hereby ratified and confirmed.

This Power of Attorney is made and executed pursuant to and by authority of the By-Law printed on the reverse hereof, duly adopted, as indicated, by the shareholders of the corporation.

In Witness Whereof, WESTERN SURETY COMPANY has caused these presents to be signed by its Vice President and its corporate seal to be hereto affixed on this 18th day of January, 2018.

WESTERN SURETY COMPANY

Paul T. Bruflat, Vice President

State of South Dakota
County of Minnehaha } ss

On this 18th day of January, 2018, before me personally came Paul T. Bruflat, to me known, who, being by me duly sworn, did depose and say: that he resides in the City of Sioux Falls, State of South Dakota; that he is the Vice President of WESTERN SURETY COMPANY described in and which executed the above instrument; that he knows the seal of said corporation; that the seal affixed to the said instrument is such corporate seal; that it was so affixed pursuant to authority given by the Board of Directors of said corporation and that he signed his name thereto pursuant to like authority, and acknowledges same to be the act and deed of said corporation.

My commission expires
June 23, 2021

J. MOHR
NOTARY PUBLIC
SOUTH DAKOTA

J. Mohr, Notary Public

CERTIFICATE

I, L. Nelson, Assistant Secretary of WESTERN SURETY COMPANY do hereby certify that the Power of Attorney hereinabove set forth is still in force, and further certify that the By-Law of the corporation printed on the reverse hereof is still in force. In testimony whereof I have hereunto subscribed my name and affixed the seal of the said corporation this _____ day of MAY 31 2018, _____.

WESTERN SURETY COMPANY

L. Nelson, Assistant Secretary

Form F4280-7-2012

Go to www.cnasurety.com > Owner / Obligee Services > Validate Bond Coverage, if you want to verify bond authenticity.

Authorizing By-Law

ADOPTED BY THE SHAREHOLDERS OF WESTERN SURETY COMPANY

This Power of Attorney is made and executed pursuant to and by authority of the following By-Law duly adopted by the shareholders of the Company.

Section 7. All bonds, policies, undertakings, Powers of Attorney, or other obligations of the corporation shall be executed in the corporate name of the Company by the President, Secretary, and Assistant Secretary, Treasurer, or any Vice President, or by such other officers as the Board of Directors may authorize. The President, any Vice President, Secretary, any Assistant Secretary, or the Treasurer may appoint Attorneys in Fact or agents who shall have authority to issue bonds, policies, or undertakings in the name of the Company. The corporate seal is not necessary for the validity of any bonds, policies, undertakings, Powers of Attorney or other obligations of the corporation. The signature of any such officer and the corporate seal may be printed by facsimile.

ACKNOWLEDGEMENT OF SURETY COMPANY

STATE OF NEW YORK

COUNTY OF NASSAU

On this May 31, 2018 before me personally came Dana Granice to me known, who, being by me duly sworn, did depose and say; that he/she resides in Suffolk County, State of New York, that he/she is the Attorney-In-Fact of the Western Surety Company the corporation described in which executed the above instrument; that he/she knows the seal of said corporation; that the seal affixed to said instrument is such corporate seal; that is was so affixed by the Board of Directors of said corporation; and that he/she signed his/her name thereto by like order; and the affiant did further depose and say that the Superintendent of Insurance of the State of New York, has, pursuant to Section 1111 of the Insurance Law of the State of New York, issued to Western Surety Company (Surety) his/her certificate of qualification evidencing the qualification of said Company and its sufficiency under any law of the State of New York as surety and guarantor, and the propriety of accepting and approving it as such; and that such Certificate has not been revoked.

GRACE ACKERSON
Notary Public-State of New York
No. 01AC6111590
Qualified in Nassau County
Commission Expires 6/14/2020

Notary Public

WESTERN SURETY COMPANY
Sioux Falls, South Dakota
Statement of Net Admitted Assets and Liabilities
December 31, 2017

ASSETS

Bonds	$ 1,895,156,151
Stocks	28,408,086
Cash, cash equivalents, and short-term investments	24,679,133
Receivables for securities	7,500,016
Investment income due and accrued	22,426,771
Premiums and considerations	37,932,713
Amounts recoverable from reinsurers	1,562,035
Current federal and foreign income taxes recoverable from CNA Financial Corporation	3,481,084
Net deferred tax asset	10,688,834
Receivable from parent, subsidiaries, and affiliates	11,647,470
Other assets	10,215
Total Assets	$ 2,043,492,508

LIABILITIES AND SURPLUS

Losses		$ 201,046,845
Loss adjustment expense		57,918,199
Commissions payable, contingent commissions and other similar charges		10,047,343
Other expenses (excluding taxes, license and fees)		943,877
Taxes, License and fees (excluding federal and foreign income taxes)		3,447,669
Unearned premiums		223,752,269
Advance premiums		5,436,181
Ceded reinsurance premiums payable		1,720,726
Amounts withheld or retained by company for account of others		7,338,456
Provision for reinsurance		239,534
Payable to parent, subsidiaries and affiliates		12,934
Payable on security transations		4,000,000
Other liabilities		367,837
Total Liabilities		$ 516,271,870
Surplus Account:		
Common stock	$ 4,000,000	
Gross paid in and contributed surplus	280,071,837	
Unassigned funds	1,243,148,801	
Surplus as regards policyholders		$ 1,527,220,637
Total Liabilities and Capital		$ 2,043,492,508

I, Troy Wray, Assistant Vice President of Western Surety Company hereby certify that the above is an accurate representation of the financial statement of the Company dated December 31, 2017, as filed with the various Insurance Departments and is a true and correct statement of the condition of Western Surety Company as of that date.

Western Surety Company

By _____
Assistant Vice President

Subscribed and sworn to me this 8th day of March, 2018.

My commission expires:

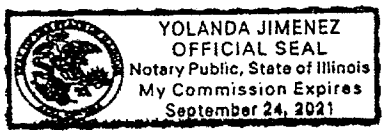

Yolanda Jimenez
Notary Public

Bond No. 30042564

Payment Bond (Pages 108 to 111): Use for any contract for which a Payment Bond is required.

PAYMENT BOND (Page 1)

PAYMENT BOND

KNOW ALL PERSONS BY THESE PRESENTS, That we, Inter LaPeruta JV

35 Colonial Place, Mount Vernon, NY 10550

hereinafter referred to as the "Principal", and Western Surety Company

P.O. Box 5077, Sioux Falls, SD 57117-5077

hereinafter referred to as the "Surety" ("Sureties") are held and firmly bound to THE CITY OF NEW YORK, hereinafter referred to as the "City" or to its successors and assigns, in the penal sum of

Eight Million Nine Hundred Ninety Six Thousand Four Hundred Seventy Five and 35/100

($ 8,996,475.35) Dollars, lawful money of the United States, for the payment of which said sum of money well and truly to be made, we, and each of us, bind ourselves, our heirs, executors, administrators, successors and assigns, jointly and severally, firmly by these presents.

WHEREAS, the Principal is about to enter, or has entered, into a Contract in writing with the City for

FMS ID: SEQ200531. E-PIN: 85018B0059001 DDC PIN: 8502018SE0015C Storm Sewer Extensions in 239th Street Between 87th Avenue and 88th Avenue ETC. Borough of Queens, City of New York.

a copy of which Contract is annexed to and hereby made a part of this bond as though herein set forth in full;

NOW, THEREFORE, the conditions of this obligation are such that if the Principal, his or its representatives or assigns and other Subcontractors to whom Work under this Contract is sublet and his or their successors and assigns shall promptly pay or cause to be paid all lawful claims for

(a) Wages and compensation for labor performed and services rendered by all persons engaged in the prosecution of the Work under said Contract, and any amendment or extension thereof or addition thereto, whether such persons be agents servants or employees of the Principal or any such Subcontractor, including all persons so engaged who perform the work of laborers or mechanics at or in the vicinity of the site

Payment Bond (Pages 108 to 111): Use for any contract for which a Payment Bond is required.

of the Project regardless of any contractual relationship between the Principal or such Subcontractors, or his or their successors or assigns, on the one hand and such laborers or mechanics on the other, but not including office employees not regularly stationed at the site of the project; and

(b) Materials and supplies (whether incorporated in the permanent structure or not), as well as teams, fuels, oils, implements or machinery furnished, used or consumed by said Principal or any subcontractor at or in the vicinity of the site of the Project in the prosecution of the Work under said Contract and any amendment or extension thereof or addition thereto; then this obligation shall be void, otherwise to remain in full force and effect.

This bond is subject to the following additional conditions, limitations and agreements:

(a) The Principal and Surety (Sureties) agree that this bond shall be for the benefit of any materialmen or laborer having a just claim, as well as the City itself.

(b) All persons who have performed labor, rendered services or furnished materials and supplies, as aforesaid, shall have a direct right of action against the Principal and his, its or their successors and assigns, and the Surety (Sureties) herein, or against either or both or any of them and their successors and assigns. Such persons may sue in their own name, and may prosecute the suit to judgment and execution without the necessity of joining with any other persons as party plaintiff.

(c) The Principal and Surety (Sureties) agree that neither of them will hold the City liable for any judgment for costs of otherwise, obtained by either or both of them against a laborer or materialman in a suit brought by either a laborer or materialman under this bond for moneys allegedly due for performing work or furnishing material.

(d) The Surety (Sureties) or its successors and assigns shall not be liable for any compensation recoverable by an employee or laborer under the Workmen's Compensation Law.

(e) In no event shall the Surety (Sureties), or its successors or assigns, be liable for a greater sum than the penalty of this bond or be subject to any suit, action or proceeding hereon that is instituted by any person, firm, or corporation hereunder later than two years after the complete performance of said Contract and final settlement thereof.

The Principal, for himself and his successors and assigns, and the Surety (Sureties), for itself and its successors and assigns, do hereby expressly waive any objection that might be interposed as to the right of the City to require a bond containing the foregoing provisions, and they do hereby further expressly waive any defense which they or either of them might interpose to an action brought hereon by any person, firm or corporation, including subcontractors, materialmen and third persons, for work, labor, services, supplies or material performed rendered, or furnished as aforesaid upon the ground that there is no law authorizing the City to require the foregoing provisions to be place in this bond.

And the Surety (Sureties), for value received, for itself and its successors and assigns, hereby stipulates and agrees that the obligation of said Surety (Sureties), and its bonds shall be in no way impaired or affected by any extension of time, modification, omission, addition, or change in or of the said Contract or the work to be performed thereunder, or by any payment thereunder before the time required therein, or by any waiver of any provisions thereof, or by any assignment, subletting or other transfer thereof or of any part thereof, or of any Work to be performed, or any moneys due to become due thereunder and said Surety (Sureties) does hereby waive notice of any and all of such extensions, modifications, omissions, additions, changes, payments, waivers, assignments, subcontracts and transfers, and hereby expressly stipulates and agrees that any and all things done and omitted to be done by and in relation to assignees, Subcontractors, and other transferees shall have the same effect as to said Surety (Sureties) as though done or omitted to be done or in relation to said Principal.

Payment Bond (Pages 108 to 111): Use for any contract for which a Payment Bond is required.

PAYMENT BOND (Page 3)

IN WITNESS WHEREOF, the Principal and the Surety (Sureties) have hereunto set their hands and seals, and such of them as are corporations have caused their corporate seals to be hereunto affixed and these presents to be signed by their proper officers, this 31st day of May, 2018.

(Seal)

Inter LaPeruta JV (L.S.)
Principal

By:

(Seal)

Western Surety Company
Surety

By:
Dana Granice, Attorney-In-Fact

(Seal)

Surety

By:

(Seal)

Surety

By:

(Seal)

Surety

By:

If the Contractor (Principal) is a partnership, the bond should be signed by each of the individuals who are partners.

If the Contractor (Principal) is a corporation, the bond should be signed in its correct corporate name by a duly authorized officer, agent, or attorney-in-fact.

There should be executed an appropriate number of counterparts of the bond corresponding to the number of counterparts of the Contract.

Payment Bond (Pages 108 to 111): Use for any contract for which a Payment Bond is required.

ACKNOWLEDGMENT OF PRINCIPAL, IF A CORPORATION

State of _____ County of _____ ss:

On this _____ day of _____, _____, before me personally came _____ to me known, who, being by me duly sworn did depose and say that he resides at _____ _____ that he is the _____ of the corporation described in and which executed the foregoing instrument; that he knows the seal of said corporation; that one of the seals affixed to said instrument is such seal; that it was so affixed by order of the directors of said corporation, and that he signed his name thereto by like order.

_____
Notary Public or Commissioner of Deeds

ACKNOWLEDGMENT OF PRINCIPAL, IF A PARTNERSHIP

State of _____ County of _____ ss:

On this _____ day of _____, _____, before me personally appeared _____ to me known, and known to me to be one of the members of the firm of _____ _____ described in and who executed the foregoing instrument; and he acknowledged to me that he executed the same as and for the act and deed of said firm.

_____
Notary Public or Commissioner of Deeds

ACKNOWLEDGMENT OF PRINCIPAL, IF AN INDIVIDUAL

State of _____ County of _____ ss:

On this _____ day of _____, _____, before me personally appeared _____ to me known, and known to me to be the person described in and who executed the foregoing instrument; and acknowledged that he executed the same.

_____
Notary Public or Commissioner of Deeds

Each executed bond should be accompanied by: (a) appropriate acknowledgments of the respective parties; (b) appropriate duly certified copy of Power of Attorney or other certificate of authority where bond is executed by agent, officer or other representative of Principal or Surety; (c) a duly certified extract from By-Laws or resolutions of Surety under which Power of Attorney or other certificate of authority of its agent, officer or representative was issued, and (d) certified copy of latest published financial statement of assets and liabilities of Surety.

****

Affix Acknowledgments and Justification of Sureties.

Acknowledgment by Principal

State of New York }
County of Queens }

On this 4th day of June 2018, personally appeared before me Michael Mutino member of the firm/Joint Venture of Inter LaPeruta JV to me known and known to me to be the individual described in and who executed the foregoing instrument and he acknowledged to me that he executed the same for an on behalf of said firm/Joint Venture.

Sworn before me this 4th day of June 2018

Elizabeth L

Notary Public

Elizabeth Leichnam
Notary Public, State of New York
No. 01LE6004261
Qualified in Queens County
Commission Expires June 7, 2018

Western Surety Company

POWER OF ATTORNEY APPOINTING INDIVIDUAL ATTORNEY-IN-FACT

Know All Men By These Presents, That WESTERN SURETY COMPANY, a South Dakota corporation, is a duly organized and existing corporation having its principal office in the City of Sioux Falls, and State of South Dakota, and that it does by virtue of the signature and seal herein affixed hereby make, constitute and appoint

Gerard S Macholz, Camille Maitland, Rita Sagistano, Robert T Pearson, Thomas Bean, Susan Lupski, George O Brewster, Michelle Wannamaker, Desiree Cardlin, Colette R Chisholm, Vincent A Walsh, Dana Granice, Individually

of Uniondale, NY, its true and lawful Attorney(s)-in-Fact with full power and authority hereby conferred to sign, seal and execute for and on its behalf bonds, undertakings and other obligatory instruments of similar nature

- In Unlimited Amounts -

and to bind it thereby as fully and to the same extent as if such instruments were signed by a duly authorized officer of the corporation and all the acts of said Attorney, pursuant to the authority hereby given, are hereby ratified and confirmed.

This Power of Attorney is made and executed pursuant to and by authority of the By-Law printed on the reverse hereof, duly adopted, as indicated, by the shareholders of the corporation.

In Witness Whereof, WESTERN SURETY COMPANY has caused these presents to be signed by its Vice President and its corporate seal to be hereto affixed on this 18th day of January, 2018.

WESTERN SURETY COMPANY

Paul T. Bruflat, Vice President

State of South Dakota
County of Minnehaha } ss

On this 18th day of January, 2018, before me personally came Paul T. Bruflat, to me known, who, being by me duly sworn, did depose and say: that he resides in the City of Sioux Falls, State of South Dakota; that he is the Vice President of WESTERN SURETY COMPANY described in and which executed the above instrument; that he knows the seal of said corporation; that the seal affixed to the said instrument is such corporate seal; that it was so affixed pursuant to authority given by the Board of Directors of said corporation and that he signed his name thereto pursuant to like authority, and acknowledges same to be the act and deed of said corporation.

My commission expires
June 23, 2021

J. MOHR
NOTARY PUBLIC
SOUTH DAKOTA

J. Mohr, Notary Public

CERTIFICATE

I, L. Nelson, Assistant Secretary of WESTERN SURETY COMPANY do hereby certify that the Power of Attorney hereinabove set forth is still in force, and further certify that the By-Law of the corporation printed on the reverse hereof is still in force. In testimony whereof I have hereunto subscribed my name and affixed the seal of the said corporation this _____ day of MAY 31 2018, _____.

WESTERN SURETY COMPANY

L. Nelson, Assistant Secretary

Form F4280-7-2012

Go to www.cnasurety.com > Owner / Obligee Services > Validate Bond Coverage, if you want to verify bond authenticity.

Authorizing By-Law

ADOPTED BY THE SHAREHOLDERS OF WESTERN SURETY COMPANY

This Power of Attorney is made and executed pursuant to and by authority of the following By-Law duly adopted by the shareholders of the Company.

Section 7. All bonds, policies, undertakings, Powers of Attorney, or other obligations of the corporation shall be executed in the corporate name of the Company by the President, Secretary, and Assistant Secretary, Treasurer, or any Vice President, or by such other officers as the Board of Directors may authorize. The President, any Vice President, Secretary, any Assistant Secretary, or the Treasurer may appoint Attorneys in Fact or agents who shall have authority to issue bonds, policies, or undertakings in the name of the Company. The corporate seal is not necessary for the validity of any bonds, policies, undertakings, Powers of Attorney or other obligations of the corporation. The signature of any such officer and the corporate seal may be printed by facsimile.

ACKNOWLEDGEMENT OF SURETY COMPANY

STATE OF NEW YORK

COUNTY OF NASSAU

On this May 31, 2018 before me personally came Dana Granice to me known, who, being by me duly sworn, did depose and say; that he/she resides in Suffolk County, State of New York, that he/she is the Attorney-In-Fact of the Western Surety Company the corporation described in which executed the above instrument; that he/she knows the seal of said corporation; that the seal affixed to said instrument is such corporate seal; that is was so affixed by the Board of Directors of said corporation; and that he/she signed his/her name thereto by like order; and the affiant did further depose and say that the Superintendent of Insurance of the State of New York, has, pursuant to Section 1111 of the Insurance Law of the State of New York, issued to Western Surety Company (Surety) his/her certificate of qualification evidencing the qualification of said Company and its sufficiency under any law of the State of New York as surety and guarantor, and the propriety of accepting and approving it as such; and that such Certificate has not been revoked.

GRACE ACKERSON
Notary Public-State of New York
No. 01AC6111590
Qualified in Nassau County
Commission Expires 6/14/2020

Notary Public

WESTERN SURETY COMPANY
Sioux Falls, South Dakota
Statement of Net Admitted Assets and Liabilities
December 31, 2017

ASSETS

Bonds	$ 1,895,156,151
Stocks	28,408,086
Cash, cash equivalents, and short-term investments	24,679,133
Receivables for securities	7,500,016
Investment income due and accrued	22,426,771
Premiums and considerations	37,932,713
Amounts recoverable from reinsurers	1,562,035
Current federal and foreign income taxes recoverable from CNA Financial Corporation	3,481,084
Net deferred tax asset	10,688,834
Receivable from parent, subsidiaries, and affiliates	11,647,470
Other assets	10,215
Total Assets	$ 2,043,492,508

LIABILITIES AND SURPLUS

Losses		$ 201,046,845
Loss adjustment expense		57,918,199
Commissions payable, contingent commissions and other similar charges		10,047,343
Other expenses (excluding taxes, license and fees)		943,877
Taxes, License and fees (excluding federal and foreign income taxes)		3,447,669
Unearned premiums		223,752,269
Advance premiums		5,436,181
Ceded reinsurance premiums payable		1,720,726
Amounts withheld or retained by company for account of others		7,338,456
Provision for reinsurance		239,534
Payable to parent, subsidiaries and affiliates		12,934
Payable on security transations		4,000,000
Other liabilities		367,837
Total Liabilities		$ 516,271,870
Surplus Account:		
Common stock	$ 4,000,000	
Gross paid in and contributed surplus	280,071,837	
Unassigned funds	1,243,148,801	
Surplus as regards policyholders		$ 1,527,220,637
Total Liabilities and Capital		$ 2,043,492,508

I, Troy Wray, Assistant Vice President of Western Surety Company hereby certify that the above is an accurate representation of the financial statement of the Company dated December 31, 2017, as filed with the various Insurance Departments and is a true and correct statement of the condition of Western Surety Company as of that date.

Western Surety Company

By _____
Assistant Vice President

Subscribed and sworn to me this 8th day of March, 2018.

My commission expires:

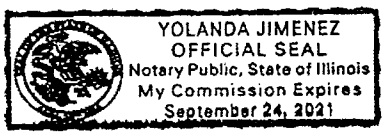

Yolanda Jimenez
Notary Public

ACORD®

CERTIFICATE OF LIABILITY INSURANCE

DATE (MM/DD/YYYY): 6/25/2018

THIS CERTIFICATE IS ISSUED AS A MATTER OF INFORMATION ONLY AND CONFERS NO RIGHTS UPON THE CERTIFICATE HOLDER. THIS CERTIFICATE DOES NOT AFFIRMATIVELY OR NEGATIVELY AMEND, EXTEND OR ALTER THE COVERAGE AFFORDED BY THE POLICIES BELOW. THIS CERTIFICATE OF INSURANCE DOES NOT CONSTITUTE A CONTRACT BETWEEN THE ISSUING INSURER(S), AUTHORIZED REPRESENTATIVE OR PRODUCER, AND THE CERTIFICATE HOLDER.

IMPORTANT: If the certificate holder is an ADDITIONAL INSURED, the policy(ies) must be endorsed. If SUBROGATION IS WAIVED, subject to the terms and conditions of the policy, certain policies may require an endorsement. A statement on this certificate does not confer rights to the certificate holder in lieu of such endorsement(s).

PRODUCER
Alliant Insurance Services Inc
333 Earle Ovington Boulevard
Uniondale NY 11553

CONTACT NAME:
PHONE (A/C, No, Ext): 516-414-8900 FAX (A/C, No):
E-MAIL ADDRESS:

INSURER(S) AFFORDING COVERAGE	NAIC #
INSURER A : Zurich American Insurance Company	16535
INSURER B : Starr Indemnity & Liability Company	38318
INSURER C : American Guarantee and Liability Ins Co	26247
INSURER D : Aspen American Insurance Company	43460
INSURER E :	
INSURER F :	

INSURED
Inter LaPeruta JV
35 Colonial Place
Mount Vernon NY 10550

INTECON-05

COVERAGES **CERTIFICATE NUMBER:** 1385690980 **REVISION NUMBER:**

THIS IS TO CERTIFY THAT THE POLICIES OF INSURANCE LISTED BELOW HAVE BEEN ISSUED TO THE INSURED NAMED ABOVE FOR THE POLICY PERIOD INDICATED. NOTWITHSTANDING ANY REQUIREMENT, TERM OR CONDITION OF ANY CONTRACT OR OTHER DOCUMENT WITH RESPECT TO WHICH THIS CERTIFICATE MAY BE ISSUED OR MAY PERTAIN, THE INSURANCE AFFORDED BY THE POLICIES DESCRIBED HEREIN IS SUBJECT TO ALL THE TERMS, EXCLUSIONS AND CONDITIONS OF SUCH POLICIES. LIMITS SHOWN MAY HAVE BEEN REDUCED BY PAID CLAIMS.

INSR LTR	TYPE OF INSURANCE	ADDL INSD	SUBR WVD	POLICY NUMBER	POLICY EFF (MM/DD/YYYY)	POLICY EXP (MM/DD/YYYY)	LIMITS	
A	X COMMERCIAL GENERAL LIABILITY CLAIMS-MADE X OCCUR X Contractual Liab GEN'L AGGREGATE LIMIT APPLIES PER: POLICY X PRO-JECT LOC OTHER:			0127823-00	8/1/2017	8/1/2018	EACH OCCURRENCE DAMAGE TO RENTED PREMISES (Ea occurrence) MED EXP (Any one person) PERSONAL & ADV INJURY GENERAL AGGREGATE PRODUCTS - COMP/OP AGG $	$ 2,000,000 $ 300,000 $ 15,000 $ 1,000,000 $ 4,000,000 $ 4,000,000
A	AUTOMOBILE LIABILITY X ANY AUTO ALL OWNED AUTOS SCHEDULED AUTOS X HIRED AUTOS X NON-OWNED AUTOS			0127834-00	8/1/2017	8/1/2018	COMBINED SINGLE LIMIT (Ea accident) BODILY INJURY (Per person) BODILY INJURY (Per accident) PROPERTY DAMAGE (Per accident) $	$ 1,000,000 $ $ $ $
B	X UMBRELLA LIAB X OCCUR EXCESS LIAB CLAIMS-MADE DED X RETENTION $ $10,000			1000023839	8/1/2017	8/1/2018	EACH OCCURRENCE AGGREGATE $	$ 3,000,000 $ 3,000,000 $
A	WORKERS COMPENSATION AND EMPLOYERS' LIABILITY ANY PROPRIETOR/PARTNER/EXECUTIVE OFFICER/MEMBER EXCLUDED? Y/N (Mandatory in NH) If yes, describe under DESCRIPTION OF OPERATIONS below	N/A		0127648-00	8/1/2017	8/1/2018	X PER STATUTE OTH-ER E.L. EACH ACCIDENT E.L. DISEASE - EA EMPLOYEE E.L. DISEASE - POLICY LIMIT	 $ 1,000,000 $ 1,000,000 $ 1,000,000
C D	Excess Liability Leased/Rented Equipment			AEC 0199899-01 IMZ280717	8/1/2017 8/1/2017	8/1/2018 8/1/2018	Occurrence/Aggregate Limit	$9,00,000 1,000,000

DESCRIPTION OF OPERATIONS / LOCATIONS / VEHICLES (ACORD 101, Additional Remarks Schedule, may be attached if more space is required)
Re: SEQ200531
Consolidated Edison Company of New York, the City of New York, including its officials and employees are included as Additional Insured as respects Liability arising out of work performed by the Named Insured as required by written contract. The insurance provided shall be primary and any other insurance maintained by the Additional Insured is excess and non-contributory. Waiver of Subrogation applies as required by contract.

CERTIFICATE HOLDER

New York City Department of Design and Construction
30-30 Thomson Avenue, 4th Floor
Long Island City, NY 11101

CANCELLATION

SHOULD ANY OF THE ABOVE DESCRIBED POLICIES BE CANCELLED BEFORE THE EXPIRATION DATE THEREOF, NOTICE WILL BE DELIVERED IN ACCORDANCE WITH THE POLICY PROVISIONS.

AUTHORIZED REPRESENTATIVE

NEW YORK STATE | Workers' Compensation Board

CERTIFICATE OF NYS WORKERS' COMPENSATION INSURANCE COVERAGE

1a. Legal Name & Address of Insured (use street address only) Inter LaPeruta JV 274 White Plains Road, Suite 6 Eastchester, NY 10709 Work Location of Insured *(Only required if coverage is specifically limited to certain locations in New York State, i.e., a Wrap-Up Policy)*	1b. Business Telephone Number of Insured (914) 337-1350 1c. NYS Unemployment Insurance Employer Registration Number of Insured 1d. Federal Employer Identification Number of Insured or Social Security Number FEIN: 47-1391529
2. Name and Address of Entity Requesting Proof of Coverage (Entity Being Listed as the Certificate Holder) City of New York Department of Design and Construction 30-30 Thomson Avenue Long Island City, NY 1101	3a. Name of Insurance Carrier Zurich American Insurance Company 3b. Policy Number of Entity Listed in Box "1a" 0127646-00 3c. Policy effective period 8/1/2017 to 8/1/2018 3d. The Proprietor, Partners or Executive Officers are ☒ included. (Only check box if all partners/officers included) ☐ all excluded or certain partners/officers excluded.

This certifies that the insurance carrier indicated above in box "3" insures the business referenced above in box "1a" for workers' compensation under the New York State Workers' Compensation Law. **(To use this form, New York (NY) must be listed under Item 3A on the INFORMATION PAGE of the workers' compensation insurance policy).** The Insurance Carrier or its licensed agent will send this Certificate of Insurance to the entity listed above as the certificate holder in box "2".

Will the carrier notify the certificate holder within 10 days of a policy being cancelled for non-payment of premium or within 30 days if cancelled for any other reason or if the insured is otherwise eliminated from the coverage indicated on this certificate prior to the end of the policy effective period? ☒YES ☐NO

This certificate is issued as a matter of information only and confers no rights upon the certificate holder. This certificate does not amend, extend or alter the coverage afforded by the policy listed, nor does it confer any rights or responsibilities beyond those contained in the referenced policy.

This certificate may be used as evidence of a Workers' Compensation contract of insurance only while the underlying policy is in effect.

Please Note: Upon cancellation of the workers' compensation policy indicated on this form, if the business continues to be named on a permit, license or contract issued by a certificate holder, the business must provide that certificate holder with a new Certificate of Workers' Compensation Coverage or other authorized proof that the business is complying with the mandatory coverage requirements of the New York State Workers' Compensation Law.

Under penalty of perjury, I certify that I am an authorized representative or licensed agent of the insurance carrier referenced above and that the named insured has the coverage as depicted on this form.

Approved by: Connor Baker
(Print name of authorized representative or licensed agent of insurance carrier)

Approved by: Connor Baker 6/25/2018
(Signature) (Date)

Title: Account Rep.

Telephone Number of authorized representative or licensed agent of insurance carrier: (516) 414-8606

Please Note: Only insurance carriers and their licensed agents are authorized to issue Form C-105.2. Insurance brokers are NOT authorized to issue it.

Workers' Compensation Law

Section 57. Restriction on issue of permits and the entering into contracts unless compensation is secured.

1. The head of a state or municipal department, board, commission or office authorized or required by law to issue any permit for or in connection with any work involving the employment of employees in a hazardous employment defined by this chapter, and notwithstanding any general or special statute requiring or authorizing the issue of such permits, shall not issue such permit unless proof duly subscribed by an insurance carrier is produced in a form satisfactory to the chair, that compensation for all employees has been secured as provided by this chapter. Nothing herein, however, shall be construed as creating any liability on the part of such state or municipal department, board, commission or office to pay any compensation to any such employee if so employed.

2. The head of a state or municipal department, board, commission or office authorized or required by law to enter into any contract for or in connection with any work involving the employment of employees in a hazardous employment defined by this chapter, notwithstanding any general or special statute requiring or authorizing any such contract, shall not enter into any such contract unless proof duly subscribed by an insurance carrier is produced in a form satisfactory to the chair, that compensation for all employees has been secured as provided by this chapter.

STATE OF NEW YORK
WORKERS' COMPENSATION BOARD

CERTIFICATE OF INSURANCE COVERAGE UNDER THE NYS DISABILITY BENEFITS LAW

PART 1. To be completed by Disability Benefits Carrier or Licensed Insurance Agent of that Carrier

1a. Legal Name and Address of Insured (Use street address only) Inter LaPeruta JV 35 Colonial Place Mount Vernon, NY 10550	1b. Business Telephone Number of Insured (914) 863-0000 1c. NYS Unemployment Insurance Employer Registration Number of Insured 4830428 1d. Federal Employer Identification Number of Insured or Social Security Number 47-1391529
2. Name and Address of the Entity Requesting Proof of Coverage (Entity Being Listed as the Certificate Holder) New York City Department of Design and Construction 30-30 Thomson Ave. Long Island City, NY 11101	3a. Name of Insurance Carrier HARTFORD LIFE AND ACCIDENT 3b. Policy Number of entity listed in box "1a": LNY-621621 3c. Policy effective period: 10/01/2016 to 09/30/2018

4. Policy covers:

a. ☑ All of the employer's employees eligible under the New York Disability Benefits Law

b. ☐ Only the following class or classes of the employer's employees:

Under penalty of perjury, I certify that I am an authorized representative or licensed agent of the insurance carrier referenced above and that the named insured has NYS Disability Benefits insurance coverage as described above.

Date Signed 6/25//2018 By _____
(Signature of insurance carrier's authorized representative or NYS Licensed Insurance Agent of that insurance carrier)

Telephone Number 516-746-4440 Title President

IMPORTANT: If box "4a" is checked, and this form is signed by the insurance carrier's authorized representative or NYS Licensed Insurance Agent of that carrier, this certificate is COMPLETE. Mail it directly to the certificate holder.
If box "4b" is checked, this certificate is NOT COMPLETE for purposes of Section 220, Subd. 8 of the Disability Benefits Law. It must be mailed for completion to the Workers' Compensation Board, DB Plans Acceptance Unit, 20 Park Street, Albany, New York 12207.

PART 2. To be completed by NYS Workers' Compensation Board (Only if box "4b" of Part 1 has been checked)

State Of New York
Workers' Compensation Board

According to information maintained by the NYS Workers' Compensation Board, the above-named employer has complied with the NYS Disability Benefits Law with respect to all of his/her employees.

Date Signed _____ By _____
(Signature of NYS Workers' Compensation Board Employee)

Telephone Number _____ Title _____

Please Note: Only insurance carriers licensed to write NYS disability benefits insurance policies and NYS licensed insurance agents of those insurance carriers are authorized to issue Form DB-120.1. Insurance brokers are NOT authorized to issue this form.

Additional Instructions for Form DB-120.1

By signing this form, the insurance carrier identified in box "3" on this form is certifying that it is insuring the business referenced in box "1a" for disability benefits under the New York State Disability Benefits Law. The Insurance Carrier or its licensed agent will send this Certificate of Insurance to the entity listed as the certificate holder in box "2". ***This Certificate is valid for the earlier of one year after this form is approved by the insurance carrier or its licensed agent, or the policy expiration date listed in box "3c".***

Please Note: Upon the cancellation of the disability benefits policy indicated on this form, if the business continues to be named on a permit, license or contract issued by a certificate holder, the business must provide that certificate holder with a new Certificate of NYS Disability Benefits Coverage or other authorized proof that the business is complying with the mandatory coverage requirements of the New York State Disability Benefits Law.

DISABILITY BENEFITS LAW

§220. Subd. 8

(a) The head of a state or municipal department, board, commission or office authorized or required by law to issue any permit for or in connection with any work involving the employment of employees in employment as defined in this article, and not withstanding any general or special statute requiring or authorizing the issue of such permits, shall not issue such permit unless proof duly subscribed by an insurance carrier is produced in a form satisfactory to the chair, that the payment of disability benefits for all employees has been secured as provided by this article. Nothing herein, however, shall be construed as creating any liability on the part of such state or municipal department, board, commission or office to pay any disability benefits to any such employee if so employed.

(b) The head of a state or municipal department, board, commission or office authorized or required by law to enter into any contract for or in connection with any work involving the employment of employees in employment as defined in this article, and notwithstanding any general or special statute requiring or authorizing any such contract, shall not enter into any such contract unless proof duly subscribed by an insurance carrier is produced in a form satisfactory to the chair, that the payment of disability benefits for all employees has been secured as provided by this article.

CITY OF NEW YORK

CERTIFICATION BY INSURANCE BROKER OR AGENT

The undersigned insurance broker or agent represents to the City of New York that the attached Certificate of Insurance is accurate in all material respects.

Ursula Simicic
[Name of broker or agent (typewritten)]

333 Earle Ovington Blvd., Suite 700, Uniondale, NY 11553
[Address of broker or agent (typewritten)]

Usrula.Simicic@alliant.com
[Email address of broker or agent (typewritten)]

(516) 414-8280
[Phone number/Fax number of broker or agent (typewritten)]

[Signature of authorized official, broker, or agent]

Account Manager
[Name and title of authorized official, broker, or agent (typewritten)]

State of New York)
) ss.:
County of Nassau)

Sworn to before me this 25 day of June 2018

NOTARY PUBLIC FOR THE STATE OF New York

DANA GRANICE
Notary Public, State of New York
No. 01GR6099128
Qualified in Suffolk County
Commission Expires 9/22/2019

LABOR LAW §220 PREVAILING WAGE SCHEDULE

Workers, Laborers and Mechanics employed on a public work project must receive not less than the prevailing rate of wage and benefits for the classification of work performed by each upon such public work. Pursuant to Labor Law §220 the Comptroller of the City of New York has promulgated this schedule solely for Workers, Laborers and Mechanics engaged by private contractors on New York City public work contracts.

This schedule is a compilation of separate determinations of the prevailing rate of wage and supplements made by the Comptroller for each trade classification listed herein pursuant to New York State Labor Law section 220 (5). The source of the wage and supplement rates, whether a collective bargaining agreement, survey data or other, is listed at the end of each classification.

Agency Chief Contracting Officers should contact the Bureau of Labor Law's Classification Unit with any questions concerning trade classifications, prevailing rates or prevailing practices with respect to procurement on New York City public works contracts. Contractors are advised to review the Comptroller's Prevailing Wage Schedule before bidding on public works contracts. Contractors with questions concerning trade classifications, prevailing rates or prevailing practices with respect to public works contracts in the procurement stage must contact the contracting agency responsible for the procurement.

Any error as to compensation under the prevailing wage law or other information as to trade classification, made by the contracting agency in the contract documents or in any other communication, will not preclude a finding against the contractor of prevailing wage violation.

Any questions concerning trade classifications, prevailing rates or prevailing practices on New York City public works contracts that have already been awarded may be directed to the Bureau of Labor Law's Classification Unit by calling (212) 669-4443. All callers must have the agency name and contract registration number available when calling with questions on public works contracts. Please direct all other compliance issues to: Bureau of Labor Law, Attn: Wasyl Kinach, P.E., Office of the Comptroller, 1 Centre Street, Room 651, New York, N.Y. 10007; Fax (212) 669-4002.

The appropriate schedule of prevailing wages and benefits must be posted at all public work sites pursuant to Labor Law §220 (3-a) (a).

This schedule is applicable to work performed during the effective period, unless otherwise noted. Changes to this schedule are published on our web site www.comptroller.nyc.gov. Contractors must pay the wages and supplements in effect when the worker, laborer, mechanic performs the work. Preliminary schedules for future one-year periods appear in the City Record on or about June 1 each succeeding year. Final schedules appear on or about July 1 in the City Record and on our web site www.comptroller.nyc.gov.

The Comptroller's Office has attempted to include all overtime, shift and night differential, Holiday, Saturday, Sunday or other premium time work. However, this schedule does not set forth every prevailing practice with respect to such rates with which employers must comply. All such practices are nevertheless part of the employer's prevailing wage obligation and contained in the collective bargaining agreements of the prevailing wage unions. These collective bargaining agreements are available for inspection by appointment. Requests for appointments may be made by calling (212) 669-4443, Monday through Friday between the hours of 9 a.m. and 5 p.m.

Prevailing rates and ratios for apprentices are attached to this schedule in the Appendix. Pursuant to Labor Law §220 (3-e), only apprentices who are individually registered in a bona fide program to which the employer contractor is a participant, registered with the New York State Department of Labor, may be employed on a public work project. Workers who are not journey persons or not registered apprentices pursuant to Labor Law §220 (3-e) may not be substituted for apprentices and must be paid as journey persons.

Public Work construction, reconstruction, demolition, excavation, rehabilitation, repair, renovation, alteration, or improvement contracts awarded pursuant to a Project Labor Agreement ("PLA") in accordance with Labor Law section 222 may have different labor standards for shift, premium and overtime work. Please refer to the PLA's pre-negotiated labor agreements for wage and benefit rates applicable to work performed outside of the regular workday. More information is available at the Mayor's Office of Contract Services (MOCS) web page at http://www.nyc.gov/html/mocs/html/vendors/pla.shtml.

All the provisions of Labor Law section 220 remain applicable to PLA work including, but not limited to, the enforcement of prevailing wage requirements by the Comptroller; however, we will enforce shift, premium, overtime and other non-standard rates as they appear in a project's pre-negotiated labor agreement.

In order to meet their obligation to provide prevailing supplemental benefits to each covered employee, employers must either:

1) Provide bona fide fringe benefits which cost the employer no less than the prevailing supplemental benefits rate; or
2) Supplement the employee's hourly wage by an amount no less than the prevailing supplemental benefits rate; or
3) Provide a combination of bona fide fringe benefits and wage supplements which cost the employer no less than the prevailing supplemental benefits rate in total.

Although prevailing wage laws do not require employers to provide bona fide fringe benefits (as opposed to wage supplements) to their employees, other laws may. For example, the Employee Retirement Income Security Act, 29 U.S.C. § 1001 et seq., the Patient Protection and Affordable Care Act, 42 U.S.C. § 18001 et seq., and the New York City Paid Sick Leave Law, N.Y.C. Admin. Code § 20-911 et seq., require certain employers to provide certain benefits to their employees. Labor agreements to which employers are a party may also require certain benefits. The Comptroller's Office does not enforce these laws or agreements.

Employers must provide prevailing supplemental benefits at the straight time rate for <u>each hour worked</u> unless otherwise noted in the classification.

Wasyl Kinach, P.E.
Director of Classifications
Bureau of Labor Law

TABLE OF CONTENTS

CLASSIFICATION	PAGE
ASBESTOS HANDLER	5
BLASTER	5
BOILERMAKER	7
BRICKLAYER	8
CARPENTER - BUILDING COMMERCIAL	9
CARPENTER - HEAVY CONSTRUCTION WORK	10
CARPENTER - HIGH RISE CONCRETE FORMS	11
CARPENTER - SIDEWALK SHED, SCAFFOLD AND HOIST	12
CEMENT & CONCRETE WORKER	13
CEMENT MASON	14
CORE DRILLER	15
DERRICKPERSON AND RIGGER	16
DIVER	17
DOCKBUILDER - PILE DRIVER	18
DRIVER: TRUCK (TEAMSTER)	19
ELECTRICIAN	21
ELECTRICIAN - ALARM TECHNICIAN	24
ELECTRICIAN-STREET LIGHTING WORKER	25
ELEVATOR CONSTRUCTOR	26
ELEVATOR REPAIR & MAINTENANCE	27
ENGINEER	28
ENGINEER - CITY SURVEYOR AND CONSULTANT	33
ENGINEER - FIELD (BUILDING CONSTRUCTION)	34
ENGINEER - FIELD (HEAVY CONSTRUCTION)	35
ENGINEER - FIELD (STEEL ERECTION)	36
ENGINEER - OPERATING	37
FLOOR COVERER	45
GLAZIER	46
GLAZIER - REPAIR & MAINTENANCE	47
HEAT AND FROST INSULATOR	48
HOUSE WRECKER	49
IRON WORKER - ORNAMENTAL	49
IRON WORKER - STRUCTURAL	50
LABORER	51
LANDSCAPING	52

MARBLE MECHANIC 54
MASON TENDER 55
MASON TENDER (INTERIOR DEMOLITION WORKER) 56
METALLIC LATHER 56
MILLWRIGHT 57
MOSAIC MECHANIC 58
PAINTER 59
PAINTER - METAL POLISHER 60
PAINTER - STRIPER 61
PAINTER - STRUCTURAL STEEL 62
PAPERHANGER 63
PAVER AND ROADBUILDER 64
PLASTERER 66
PLASTERER - TENDER 67
PLUMBER 67
PLUMBER (MECHNICAL EQUIPMENT AND SERVICE) 68
PLUMBER (RESIDENTIAL RATES FOR 1, 2 AND 3 FAMILY HOME CONSTRUCTION) 69
PLUMBER: PUMP & TANK 70
POINTER, WATERPROOFER, CAULKER, SANDBLASTER, STEAMBLASTER 71
ROOFER 72
SHEET METAL WORKER 72
SHEET METAL WORKER - SPECIALTY 73
SHIPYARD WORKER 74
SIGN ERECTOR 76
STEAMFITTER 76
STEAMFITTER - REFRIGERATION AND AIR CONDITIONER 78
STONE MASON - SETTER 80
TAPER 81
TELECOMMUNICATION WORKER 82
TILE FINISHER 83
TILE LAYER - SETTER 84
TIMBERPERSON 84
TUNNEL WORKER 85
WELDER 87

ASBESTOS HANDLER
(Hazardous Material; Disturbs, removes, encapsulates, repairs, or encloses friable asbestos material)

Asbestos Handler

Effective Period: 7/1/2017 - 6/30/2018
Wage Rate per Hour: $36.00
Supplemental Benefit Rate per Hour: $16.45

Overtime
Time and one half the regular rate after an 8 hour day.
Time and one half the regular rate for Sunday.
Time and one half the regular hourly rate after 40 hours in any work week.

Overtime Holidays
Time and one half the regular rate for work on the following holiday(s).
New Year's Day
Good Friday
Memorial Day
Independence Day
Labor Day
Thanksgiving Day
Christmas Day
Easter

Paid Holidays
None

(Local #78 and Local #12A)

BLASTER

Blaster

Effective Period: 7/1/2017 - 6/30/2018
Wage Rate per Hour: $46.27
Supplemental Benefit Rate per Hour: $47.99

Blaster (Hydraulic)

Effective Period: 7/1/2017 - 6/30/2018

Wage Rate per Hour: $47.15
Supplemental Benefit Rate per Hour: $47.99

Blaster - Trac Drill Hydraulic

Effective Period: 7/1/2017 - 6/30/2018
Wage Rate per Hour: $41.29
Supplemental Benefit Rate per Hour: $47.99

Blaster - Wagon: Air Trac: Quarry Bar: Drillrunners

Effective Period: 7/1/2017 - 6/30/2018
Wage Rate per Hour: $40.46
Supplemental Benefit Rate per Hour: $47.99

Blaster - Operators of Jack Hammers

Chippers: Spaders: Concrete Breakers: and all other pneumatic tools of like usage: Walk Behind Self Propelled Hydraulic Asphalt and Concrete Breakers: Hydro (Water) Demolition

Effective Period: 7/1/2017 - 6/30/2018
Wage Rate per Hour: $39.34
Supplemental Benefit Rate per Hour: $47.99

Blaster - Powder Carriers

Effective Period: 7/1/2017 - 6/30/2018
Wage Rate per Hour: $35.17
Supplemental Benefit Rate per Hour: $47.99

Blaster - Hydraulic Trac Drill Chuck Tender

Effective Period: 7/1/2017 - 6/30/2018
Wage Rate per Hour: $33.81
Supplemental Benefit Rate per Hour: $47.99

Blaster - Chuck Tender & Nipper

Effective Period: 7/1/2017 - 6/30/2018
Wage Rate per Hour: $33.00
Supplemental Benefit Rate per Hour: $47.99

Blaster - Magazine Keepers: (Watch Person)

Effective Period: 7/1/2017 - 6/30/2018
Wage Rate per Hour: $18.22
Supplemental Benefit Rate per Hour: $47.99

Overtime Description

Magazine Keepers:
Time and one half for work performed in excess of forty (40) hours per week and for work performed on Saturdays, Sundays and Holidays.

All Other Employees:
Time and one-half for the first two hours of overtime Monday through Friday, the first ten hours, the first ten hours of work on Saturday and for Make-up Time. Double time for all hours over ten Monday through Saturday (except make-up hours) and for all hours worked on Sunday and Holidays.

Overtime Holidays

Double time the regular rate for work on the following holiday(s).
New Year's Day
Memorial Day
Independence Day
Labor Day
Columbus Day
Thanksgiving Day
Christmas Day

Paid Holidays

None

Shift Rates

A single shift shall be 8 hours plus an unpaid lunch, starting at 8:00 A.M (or between 6:00 A.M. and 10:00 A.M. on weekdays). When two (2) shifts are employed, each shift shall be 8 hours plus ½ hour unpaid lunch. When three (3) shifts are employed, each shift will work seven and one-half (7 ½) hours, but will be paid for eight (8) hours, since only one-half (½) hour is allowed for mealtime. When two (2) or more shifts are employed, single time will be paid for each shift. The first 8 hours of any and all work performed Monday through Friday inclusive of any off-shift shall be at the single time rate.

(Local #29)

BOILERMAKER

Boilermaker

Effective Period: 7/1/2017 - 12/31/2017
Wage Rate per Hour: $55.23
Supplemental Benefit Rate per Hour: $42.96
Supplemental Note: For time and one half overtime - $63.82 For double overtime - $84.68

Effective Period: 1/1/2018 - 6/30/2018
Wage Rate per Hour: $57.17
Supplemental Benefit Rate per Hour: $43.62
Supplemental Note: For time and one half overtime - $64.81 For double overtime - $86.00

Overtime Description

For Repair and Maintenance work:
Time and one half the regular rate after an 8 hour day.
Time and one half the regular rate for Saturday.
Double time the regular rate for Sunday.
For New Construction work:
Double time the regular rate after an 8 hour day.
Double time the regular time rate for Saturday.
Double time the regular rate for Sunday.

Overtime Holidays

Double time the regular rate for work on the following holiday(s).
New Year's Day
President's Day
Memorial Day
Independence Day
Columbus Day
Election Day
Veteran's Day
Thanksgiving Day
Christmas Day

Quadruple time the regular rate for work on the following holiday(s).
Labor Day

Paid Holidays

Good Friday
Day after Thanksgiving
Day before Christmas
Day before New Year's Day

Shift Rates

When shifts are required, the first shift shall work eight (8) hours at the regular straight-time hourly rate. The second shift shall work seven and one-half (7 ½) hours and receive eight hours at the regular straight time hourly rate plus twenty-five cents ($0.25) per hour. The third shift shall work seven (7) hours and receive eight hours at the regular straight time hourly rate plus fifty cents ($0.50) per hour. A thirty (30) minute lunch period shall not be considered as time worked. Work in excess of the above shall be paid overtime at the appropriate new construction work or repair work overtime wage and supplemental benefit hourly rate.

(Local #5)

BRICKLAYER

Bricklayer

Effective Period: 7/1/2017 - 6/30/2018
Wage Rate per Hour: $55.10

Supplemental Benefit Rate per Hour: $31.20

Overtime
Time and one half the regular rate after a 7 hour day.
Time and one half the regular rate for Saturday.
Double time the regular rate for Sunday.
Saturday may be used as a make-up day at straight time when a day is lost during that week to inclement weather.

Overtime Holidays
Double time the regular rate for work on the following holiday(s).
New Year's Day
President's Day
Memorial Day
Independence Day
Labor Day
Thanksgiving Day
Christmas Day

Paid Holidays
None

Shift Rates
Overtime rates to be paid outside the regular scheduled work day.

(Bricklayer District Council)

CARPENTER - BUILDING COMMERCIAL

Building Commercial

Effective Period: 7/1/2017 - 6/30/2018
Wage Rate per Hour: $52.50
Supplemental Benefit Rate per Hour: $46.28

Overtime
Time and one half the regular rate after an 8 hour day.
Time and one half the regular rate for Saturday.
Double time the regular rate for Sunday.
Saturday may be used as a make-up day at straight time when a day is lost during that week to inclement weather.

Overtime Holidays
Double time the regular rate for work on the following holiday(s).
New Year's Day
Washington's Birthday

Memorial Day
Independence Day
Labor Day
Columbus Day
Presidential Election Day
Thanksgiving Day
Day after Thanksgiving
Christmas Day

Paid Holidays
None

Shift Rates
The second shift will receive one hour at the double time rate of pay for the last hour of the shift; eight hours pay for seven hours of work, nine hours pay for eight hours of work. There must be a first shift in order to work a second shift.

(Carpenters District Council)

CARPENTER - HEAVY CONSTRUCTION WORK
(Construction of Engineering Structures and Building Foundations)

Heavy Construction Work

Effective Period: 7/1/2017 - 6/30/2018
Wage Rate per Hour: $52.63
Supplemental Benefit Rate per Hour: $49.66

Overtime
Time and one half the regular rate after an 8 hour day.
Time and one half the regular rate for Saturday.
Double time the regular rate for Sunday.
Saturday may be used as a make-up day at straight time when a day is lost during that week to inclement weather.

Overtime Holidays
Double time the regular rate for work on the following holiday(s).
New Year's Day
President's Day
Memorial Day
Independence Day
Labor Day
Columbus Day
Presidential Election Day
Thanksgiving Day
Christmas Day

Paid Holidays
None

Shift Rates
Off shift work commencing between 5:00 P.M. and 11:00 P.M. shall work eight and one half hours allowing for one half hour for lunch. The wage rate shall be 113% of the straight time hourly wage rate.

(Carpenters District Council)

CARPENTER - HIGH RISE CONCRETE FORMS
(Excludes Engineering Structures and Building Foundations)

Carpenter High Rise A

Effective Period: 7/1/2017 - 6/30/2018
Wage Rate per Hour: $50.78
Supplemental Benefit Rate per Hour: $41.49

Carpenter High Rise B

Carpenter High Rise B worker is excluded from high risk operations such as erection decking, perimeter debris netting, leading edge work, self-climbing form systems, and the installation of cocoon systems unless directly supervised by a Carpenter High Rise A worker.

Effective Period: 7/1/2017 - 6/30/2018
Wage Rate per Hour: $39.07
Supplemental Benefit Rate per Hour: $16.65

Overtime
Time and one half the regular rate after an 8 hour day.
Time and one half the regular rate for Saturday.
Double time the regular rate for Sunday.
Saturday may be used as a make-up day at straight time when a day is lost during that week to inclement weather.

Overtime Holidays
Time and one half the regular rate for work on the following holiday(s).
New Year's Day
President's Day
Good Friday
Memorial Day
Independence Day
Labor Day
Columbus Day

Presidential Election Day
Thanksgiving Day
Christmas Day

Paid Holidays
None

Shift Rates
The second shift wage rate shall be 113% of the straight time hourly wage rate. There must be a first shift in order to work a second shift.

(Carpenters District Council)

CARPENTER - SIDEWALK SHED, SCAFFOLD AND HOIST

Carpenter - Hod Hoist

(Assisted by Mason Tender)

Effective Period: 7/1/2017 - 6/30/2018
Wage Rate per Hour: $50.50
Supplemental Benefit Rate per Hour: $39.46

Overtime
Time and one half the regular rate after an 8 hour day.
Time and one half the regular rate for Saturday.
Double time the regular rate for Sunday.
Saturday may be used as a make-up day at straight time when a day is lost during that week to inclement weather.

Overtime Holidays
Double time the regular rate for work on the following holiday(s).
New Year's Day
President's Day
Memorial Day
Independence Day
Labor Day
Columbus Day
Presidential Election Day
Thanksgiving Day
Day after Thanksgiving
Christmas Day

Paid Holidays
None

Shift Rates

The second shift will receive one hour at the double time rate of pay for the last hour of the shift; eight hours pay for seven hours of work, nine hours pay for eight hours of work. There must be a first shift in order to work a second shift.

(Carpenters District Council)

CEMENT & CONCRETE WORKER

Cement & Concrete Worker

Effective Period: 7/1/2017 - 6/30/2018
Wage Rate per Hour: $42.48
Supplemental Benefit Rate per Hour: $26.00
Supplemental Note: $29.50 on Saturdays; $33.00 on Sundays & Holidays

Cement & Concrete Worker - (Hired after 2/6/2016)

Effective Period: 7/1/2017 - 6/30/2018
Wage Rate per Hour: $32.00
Supplemental Benefit Rate per Hour: $18.00
Supplemental Note: $19.50 on Saturdays; $21.00 on Sundays & Holidays

Overtime Description

Time and one half the regular rate after 7 hour day (time and one half the regular rate after an 8 hour day when working with Dockbuilders on pile cap forms and for work below street level to the top of the foundation wall, not to exceed 2 feet or 3 feet above the sidewalk-brick shelf, when working on the foundation and structure.)

Overtime

Time and one half the regular rate for Saturday.
Double time the regular rate for Sunday.

Overtime Holidays

Double time the regular rate for work on the following holiday(s).
New Year's Day
President's Day
Good Friday
Memorial Day
Independence Day
Labor Day
Columbus Day
Presidential Election Day
Thanksgiving Day
Christmas Day

Paid Holidays

1/2 day before Christmas Day
1/2 day before New Year's Day

Shift Rates
On shift work extending over a twenty-four hour period, all shifts are paid at straight time.

(Cement Concrete Workers District Council)

CEMENT MASON

Cement Mason

Effective Period: 7/1/2017 - 6/30/2018
Wage Rate per Hour: $42.62
Supplemental Benefit Rate per Hour: $38.96
Supplemental Note: For time and one half overtime - $48.21; For double overtime - $57.46

Overtime Description
Time and one-half the regular rate after an 8 hour day, double time the regular rate after 10 hours. Time and one-half the regular rate on Saturday, double time the regular rate after 10 hours. Double time the regular rate on Sunday.

Overtime Holidays
Double time the regular rate for work on the following holiday(s).
New Year's Day
President's Day
Good Friday
Memorial Day
Independence Day
Labor Day
Columbus Day
Presidential Election Day
Thanksgiving Day
Christmas Day

Paid Holidays
Any worker who reports to work on Christmas Eve or New Year's Eve pursuant to his employer's instruction shall be entitled to three (3) hours afternoon pay without working.

Shift Rates
For an off shift day, (work at times other than the regular 7:00 A.M. to 3:30 P.M. work day) a cement mason shall be paid at the regular hourly rate plus a 25% per hour differential. Four Days a week at Ten (10)hour day.

(Local #780) (BCA)

CORE DRILLER

Core Driller

Effective Period: 7/1/2017 - 6/30/2018
Wage Rate per Hour: $38.82
Supplemental Benefit Rate per Hour: $24.66

Core Driller Helper

Effective Period: 7/1/2017 - 6/30/2018
Wage Rate per Hour: $30.96
Supplemental Benefit Rate per Hour: $24.66

Core Driller Helper(Third year in the industry)

Effective Period: 7/1/2017 - 6/30/2018
Wage Rate per Hour: $27.86
Supplemental Benefit Rate per Hour: $24.66

Core Driller Helper (Second year in the industry)

Effective Period: 7/1/2017 - 6/30/2018
Wage Rate per Hour: $24.77
Supplemental Benefit Rate per Hour: $24.66

Core Driller Helper (First year in the industry)

Effective Period: 7/1/2017 - 6/30/2018
Wage Rate per Hour: $21.67
Supplemental Benefit Rate per Hour: $24.66

Overtime Description

Time and one half the regular rate for work on a holiday plus Holiday pay when worked.

Overtime

Time and one half the regular rate after an 8 hour day.
Time and one half the regular rate for Saturday.
Double time the regular rate for Sunday.
Time and one half the regular rate for work on the following holiday(s).

Paid Holidays

New Year's Day
Memorial Day
Independence Day

Labor Day
Thanksgiving Day
Christmas Day

Shift Rates

The shift day shall be the continuous eight and one-half (8½) hours from 6:00 A.M. to 2:30 P.M. and from 2:30 P.M. to 11:00 P.M., including one-half (½) hour of employees regular rate of pay for lunch. When two (2) or more shifts are employed, single time shall be paid for each shift, but those employees employed on a shift other than from 8:00 A.M. to 5:00 P.M. shall, in addition, receive seventy-five cents ($0.75) per hour differential for each hour worked. When three (3) shifts are needed, each shift shall work seven and one-half (7 ½) hours paid for eight (8) hours of labor and be permitted one-half (½) hour for mealtime.

(Carpenters District Council)

DERRICKPERSON AND RIGGER

Derrick Person & Rigger

Effective Period: 7/1/2017 - 6/30/2018
Wage Rate per Hour: $46.86
Supplemental Benefit Rate per Hour: $51.40
Supplemental Note: The above supplemental rate applies for work performed in Manhattan, Bronx, Brooklyn and Queens. $52.82 - For work performed in Staten Island.

Derrick Person & Rigger - Site Work

Assists the Stone Mason-Setter in the setting of stone

Effective Period: 7/1/2017 - 6/30/2018
Wage Rate per Hour: $40.29
Supplemental Benefit Rate per Hour: $39.23

Overtime Description

The first two hours of overtime on weekdays and the first seven hours of work on Saturdays are paid at time and one half for wages and supplemental benefits. All additional overtimes is paid at double time for wages and supplemental benefits. Deduct $1.42 from the Staten Island hourly benefits rate before computing overtime.

Overtime

Double time the regular rate for Sunday.

Overtime Holidays

Double time the regular rate for work on the following holiday(s).
New Year's Day
Washington's Birthday
Good Friday
Memorial Day

Independence Day
Labor Day
Thanksgiving Day
Christmas Day

Paid Holidays

1/2 day on Christmas Eve if work is performed in the A.M.

(Local #197)

DIVER

Diver (Marine)

Effective Period: 7/1/2017 - 6/30/2018
Wage Rate per Hour: $66.66
Supplemental Benefit Rate per Hour: $49.66

Diver Tender (Marine)

Effective Period: 7/1/2017 - 6/30/2018
Wage Rate per Hour: $47.34
Supplemental Benefit Rate per Hour: $49.66

Overtime

Time and one half the regular rate after an 8 hour day.
Time and one half the regular rate for Saturday.
Double time the regular rate for Sunday.
Saturday may be used as a make-up day at straight time when a day is lost during that week to inclement weather.

Overtime Holidays

Double time the regular rate for work on the following holiday(s).
New Year's Day
President's Day
Memorial Day
Independence Day
Labor Day
Columbus Day
Presidential Election Day
Thanksgiving Day
Christmas Day

Paid Holidays

None

Shift Rates

When three shifts are utilized each shift shall work seven and one half-hours (7 1/2 hours) and paid for 8 hours, allowing for one half hour for lunch.

(Carpenters District Council)

DOCKBUILDER - PILE DRIVER

Dockbuilder - Pile Driver

Effective Period: 7/1/2017 - 6/30/2018
Wage Rate per Hour: $52.63
Supplemental Benefit Rate per Hour: $49.66

Overtime

Time and one half the regular rate after an 8 hour day.
Time and one half the regular rate for Saturday.
Double time the regular rate for Sunday.
Saturday may be used as a make-up day at straight time when a day is lost during that week to inclement weather.

Overtime Holidays

Double time the regular rate for work on the following holiday(s).
New Year's Day
President's Day
Memorial Day
Independence Day
Labor Day
Columbus Day
Presidential Election Day
Thanksgiving Day
Christmas Day

Paid Holidays

None

Shift Rates

Off shift work commencing between 5:00 P.M. and 11:00 P.M. shall work eight and one half hours allowing for one half hour for lunch. The wage rate shall be 113% of the straight time hourly wage rate.

(Carpenters District Council)

DRIVER: TRUCK (TEAMSTER)

Driver - Dump Truck

Effective Period: 7/1/2017 - 6/30/2018
Wage Rate per Hour: $41.18
Supplemental Benefit Rate per Hour: $44.79
Supplemental Note: Over 40 hours worked: at time and one half rate - $19.94; at double time rate - $26.58

Driver - Tractor Trailer

Effective Period: 7/1/2017 - 6/30/2018
Wage Rate per Hour: $42.22
Supplemental Benefit Rate per Hour: $45.40
Supplemental Note: Over 40 hours worked: at time and one half rate - $17.55; at double time rate - $23.40

Driver - Euclid & Turnapull Operator

Effective Period: 7/1/2017 - 6/30/2018
Wage Rate per Hour: $42.78
Supplemental Benefit Rate per Hour: $45.40
Supplemental Note: Over 40 hours worked: at time and one half rate - $17.55 at double time rate - $23.40

Overtime Description

For Paid Holidays: Holiday pay for all holidays shall be prorated based two hours per day for each day worked in the holiday week, not to exceed 8 hours of holiday pay. For Thanksgiving week, the prorated share shall be 5 1/3 hours of holiday pay for each day worked in Thanksgiving week.

Overtime

Time and one half the regular rate after an 8 hour day.
Time and one half the regular rate for Saturday.
Double time the regular rate for Sunday.

Overtime Holidays

Double time the regular rate for work on the following holiday(s).
New Year's Day
President's Day
Memorial Day
Independence Day
Labor Day
Columbus Day
Veteran's Day
Thanksgiving Day
Day after Thanksgiving
Christmas Day

Paid Holidays

New Year's Day
President's Day
Memorial Day

Independence Day
Labor Day
Columbus Day
Veteran's Day
Thanksgiving Day
Day after Thanksgiving
Christmas Day

Shift Rates

Off single shift work commencing between 6:00 P.M. and 5:00 A.M. shall work eight and one half hours allowing for one half hour for lunch and receive 9 hours pay for 8 hours of work.

Driver Redi-Mix (Sand & Gravel)

Effective Period: 7/1/2017 - 6/30/2018
Wage Rate per Hour: $38.40
Supplemental Benefit Rate per Hour: $42.12
Supplemental Note: Over 40 hours worked: time and one half rate $15.99, double time rate $21.33

Overtime Description

For Paid Holidays: Employees working two (2) days in the calendar week in which the holiday falls are to paid for these holidays, provided they shape each remaining workday during that calendar week.

Overtime

Time and one half the regular rate after an 8 hour day.
Time and one half the regular rate for Saturday.
Double time the regular rate for Sunday.

Overtime Holidays

Double time the regular rate for work on the following holiday(s).
President's Day
Columbus Day
Veteran's Day

Triple time the regular rate for work on the following holiday(s).
New Year's Day
Memorial Day
Independence Day
Labor Day
Thanksgiving Day
Christmas Day

Paid Holidays

New Year's Day
President's Day
Memorial Day
Independence Day
Labor Day
Columbus Day

Election Day
Thanksgiving Day
Christmas Day

(Local #282)

ELECTRICIAN
(Including all low voltage cabling carrying data; video; and voice in combination with data and or video.)

Electrician "A" (Regular Day / Day Shift)

Effective Period: 7/1/2017 - 5/9/2018
Wage Rate per Hour: $56.00
Supplemental Benefit Rate per Hour: $54.35

Effective Period: 5/10/2018 - 6/30/2018
Wage Rate per Hour: $56.00
Supplemental Benefit Rate per Hour: $55.72

Electrician "A" (Regular Day Overtime after 7 hrs / Day Shift Overtime after 8 hrs)

Effective Period: 7/1/2017 - 5/9/2018
Wage Rate per Hour: $84.00
Supplemental Benefit Rate per Hour: $57.86

Effective Period: 5/10/2018 - 6/30/2018
Wage Rate per Hour: $84.00
Supplemental Benefit Rate per Hour: $59.23

Electrician "A" (Swing Shift)

Effective Period: 7/1/2017 - 5/9/2018
Wage Rate per Hour: $65.71
Supplemental Benefit Rate per Hour: $61.94

Effective Period: 5/10/2018 - 6/30/2018
Wage Rate per Hour: $65.71
Supplemental Benefit Rate per Hour: $63.52

Electrician "A" (Swing Shift Overtime After 7.5 hours)

Effective Period: 7/1/2017 - 5/9/2018

Wage Rate per Hour: $98.57
Supplemental Benefit Rate per Hour: $66.05

Effective Period: 5/10/2018 - 6/30/2018
Wage Rate per Hour: $98.57
Supplemental Benefit Rate per Hour: $67.64

Electrician "A" (Graveyard Shift)

Effective Period: 7/1/2017 - 5/9/2018
Wage Rate per Hour: $73.60
Supplemental Benefit Rate per Hour: $68.33

Effective Period: 5/10/2018 - 6/30/2018
Wage Rate per Hour: $73.60
Supplemental Benefit Rate per Hour: $70.09

Electrician "A" (Graveyard Shift Overtime After 7 hours)

Effective Period: 7/1/2017 - 5/9/2018
Wage Rate per Hour: $110.40
Supplemental Benefit Rate per Hour: $72.95

Effective Period: 5/10/2018 - 6/30/2018
Wage Rate per Hour: $110.40
Supplemental Benefit Rate per Hour: $74.70

Overtime

Time and one half the regular rate after a 7 hour day.
Time and one half the regular rate for Saturday.
Time and one half the regular rate for Sunday.

Overtime Holidays

Time and one half the regular rate for work on a holiday.
New Year's Day
Martin Luther King Jr. Day
President's Day
Memorial Day
Independence Day
Labor Day
Columbus Day
Veteran's Day
Thanksgiving Day
Day after Thanksgiving
Christmas Day

Paid Holidays

None

Shift Rates

When so elected by the Employer, one or more shifts of at least five days duration may be scheduled as follows: Day Shift: 8:00 am to 4:30 pm, Swing Shift 4:30 pm to 12:30 am, Graveyard Shift: 12:30 am to 8:00 am.

For multiple shifts of temporary light and/or power, the temporary light and/or power employee shall be paid for 8 hours at the straight time rate. For three or less workers performing 8 hours temporary light and/or power the supplemental benefit rate is $25.67 and effective 5/10/18 $25.92.

Electrician "M" (First 8 hours)

"M" rated work shall be defined as jobbing: electrical work of limited duration and scope, also consisting of repairs and/or replacement of electrical and tele-data equipment. Includes all work necessary to retrofit, service, maintain and repair all kinds of lighting fixtures and local lighting controls and washing and cleaning of foregoing fixtures.

Effective Period: 7/1/2017 - 5/9/2018
Wage Rate per Hour: $28.50
Supplemental Benefit Rate per Hour: $22.10
First and Second Year "M" Wage Rate Per Hour: $24.00
First and Second Year "M" Supplemental Rate: $19.80

Effective Period: 5/10/2018 - 6/30/2018
Wage Rate per Hour: $29.00
Supplemental Benefit Rate per Hour: $22.65
First and Second Year "M" Wage Rate Per Hour: $24.50
First and Second Year "M" Supplemental Rate: $20.30

Electrician "M" (Overtime After First 8 hours)

"M" rated work shall be defined as jobbing: electrical work of limited duration and scope, also consisting of repairs and/or replacement of electrical and tele-data equipment. Includes all work necessary to retrofit, service, maintain and repair all kinds of lighting fixtures and local lighting controls and washing and cleaning of foregoing fixtures.

Effective Period: 7/1/2017 - 5/9/2018
Wage Rate per Hour: $42.75
Supplemental Benefit Rate per Hour: $23.89
First and Second Year "M" Wage Rate Per Hour: $36.00
First and Second Year "M" Supplemental Rate: $21.30

Effective Period: 5/10/2018 - 6/30/2018
Wage Rate per Hour: $43.50
Supplemental Benefit Rate per Hour: $24.47
First and Second Year "M" Wage Rate Per Hour: $36.75
First and Second Year "M" Supplemental Rate: $21.84

Overtime

Time and one half the regular rate after an 8 hour day.
Time and one half the regular rate for Saturday.
Time and one half the regular rate for Sunday.

Overtime Holidays
Time and one half the regular rate for work on the following holiday(s).
New Year's Day
Martin Luther King Jr. Day
President's Day
Memorial Day
Independence Day
Labor Day
Columbus Day
Veteran's Day
Thanksgiving Day
Day after Thanksgiving
Christmas Day

Paid Holidays
None

(Local #3)

ELECTRICIAN - ALARM TECHNICIAN
(Scope of Work - Inspect, test, repair, and replace defective, malfunctioning, or broken devices, components and controls of Fire, Burglar and Security Systems)

Alarm Technician

Effective Period: 7/1/2017 - 6/30/2018
Wage Rate per Hour: $32.40
Supplemental Benefit Rate per Hour: $16.10
Supplemental Note: $14.60 only after 8 hours worked in a day

Overtime Description
Time and one half the regular rate for work on the following holidays: Columbus Day, Veterans Day, Day after Thanksgiving.
Double time the regular rate for work on the following holidays: New Year's day, Martin Luther King Jr. Day, President's Day, Memorial Day, Independence Day, Labor Day, Thanksgiving Day, Christmas Day.

Overtime
Time and one half the regular rate after an 8 hour day.
Time and one half the regular rate for Saturday.
Double time the regular rate for Sunday.

Paid Holidays
New Year's Day

Martin Luther King Jr. Day
President's Day
Memorial Day
Independence Day
Labor Day
Columbus Day
Veteran's Day
Thanksgiving Day
Day after Thanksgiving
Christmas Day

Shift Rates

Night Differential is based upon a ten percent (10%) differential between the hours of 4:00 P.M. and 12:30 A.M. and a fifteen percent (15%) differential for the hours 12:00 A.M. to 8:00 A.M.

Vacation

At least 1 year of employment.....ten (10) days
5 years or more of employment.....fifteen (15) days
10 years of employment.....twenty (20) days
Plus one Personal Day per year

Sick Days:
One day per Year. Up to 4 vacation days may be used as sick days.

(Local #3)

ELECTRICIAN-STREET LIGHTING WORKER

Electrician - Electro Pole Electrician

Effective Period: 7/1/2017 - 5/15/2018
Wage Rate per Hour: $56.00
Supplemental Benefit Rate per Hour: $56.26

Effective Period: 5/16/2018 - 6/30/2018
Wage Rate per Hour: $56.00
Supplemental Benefit Rate per Hour: $57.63

Electrician - Electro Pole Foundation Installer

Effective Period: 7/1/2017 - 5/15/2018
Wage Rate per Hour: $41.54
Supplemental Benefit Rate per Hour: $41.02

Effective Period: 5/16/2018 - 6/30/2018
Wage Rate per Hour: $42.16
Supplemental Benefit Rate per Hour: $42.19

Electrician - Electro Pole Maintainer

Effective Period: 7/1/2017 - 5/16/2018
Wage Rate per Hour: $35.58
Supplemental Benefit Rate per Hour: $36.89

Effective Period: 5/17/2018 - 6/30/2018
Wage Rate per Hour: $36.11
Supplemental Benefit Rate per Hour: $37.93

Overtime Description

Electrician - Electro Pole Electrician: Time and one half the regular rate after a 7 hour day and after 5 consecutive days worked per week.
Electrician - Electro Pole Foundation Installer: Time and one half the regular rate after 8 hours within a 24 hour period and Saturday and Sunday.
Electrician - Electro Pole Maintainer: Time and one half the regular rate after a 7 hour day and after 5 consecutive days worked per week. Saturdays and Sundays may be used as a make-up day at straight time when a day is lost during the week to inclement weather.

Overtime Holidays

Time and one half the regular rate for work on the following holiday(s).
New Year's Day
Martin Luther King Jr. Day
President's Day
Memorial Day
Independence Day
Labor Day
Columbus Day
Veteran's Day
Thanksgiving Day
Day after Thanksgiving
Christmas Day

Paid Holidays

None

(Local #3)

ELEVATOR CONSTRUCTOR

Elevator Constructor

Effective Period: 7/1/2017 - 3/16/2018
Wage Rate per Hour: $62.64
Supplemental Benefit Rate per Hour: $34.25

Effective Period: 3/17/2018 - 6/30/2018
Wage Rate per Hour: $64.48
Supplemental Benefit Rate per Hour: $35.85

Overtime Description

For New Construction: work performed after 7 or 8 hour day, Saturday, Sunday or between 4:30pm and 7:00am shall be paid at double time rate.

Existing buildings: work performed after an 8 hour day, Saturday, Sunday or between 5:30pm and 7:00 am shall be paid time and one half.

Overtime

Double time the regular rate for work on the following holiday(s).

Paid Holidays

New Year's Day
President's Day
Good Friday
Memorial Day
Independence Day
Labor Day
Columbus Day
Veteran's Day
Thanksgiving Day
Day after Thanksgiving
Christmas Day

Vacation

Employer contributes 8% of regular basic hourly rate as vacation pay for employees with more than 15 years of service, and 6% for employees with 5 to 15 years of service, and 4% for employees with less than 5 years of service.

(Local #1)

ELEVATOR REPAIR & MAINTENANCE

Elevator Service/Modernization Mechanic

Effective Period: 7/1/2017 - 3/16/2018
Wage Rate per Hour: $49.14
Supplemental Benefit Rate per Hour: $34.11

Effective Period: 3/17/2018 - 6/30/2018
Wage Rate per Hour: $50.49
Supplemental Benefit Rate per Hour: $35.71

Overtime Description

For Scheduled Service Work: Double time - work scheduled in advance by two or more workers performed on Sundays, Holidays, and between midnight and 7:00am.

Overtime

Time and one half the regular rate after an 8 hour day.
Time and one half the regular rate for Saturday.
Time and one half the regular rate for Sunday.
Time and one half the regular rate for work on a holiday plus the day's pay.

Paid Holidays

New Year's Day
President's Day
Good Friday
Memorial Day
Independence Day
Labor Day
Columbus Day
Veteran's Day
Thanksgiving Day
Day after Thanksgiving
Christmas Day

Shift Rates

Afternoon shift - regularly hourly rate plus a (15%) fifteen percent differential. Graveyard shift - time and one half the regular rate.

Vacation

Employer contributes 8% of regular basic hourly rate as vacation pay for employees with more than 15 years of service, and 6% for employees with 5 to 15 years of service, and 4% for employees with less than 5 years of service.

(Local #1)

ENGINEER

Engineer - Heavy Construction Operating Engineer I

Cherrypickers 20 tons and over and Loaders (rubber tired and/or tractor type with a manufacturer's minimum rated capacity of six cubic yards and over).

Effective Period: 7/1/2017 - 6/30/2018
Wage Rate per Hour: $67.32
Supplemental Benefit Rate per Hour: $36.87
Supplemental Note: $66.34 on overtime
Shift Wage Rate: $107.71

Engineer - Heavy Construction Operating Engineer II

Backhoes, Basin Machines, Groover, Mechanical Sweepers, Bobcat, Boom Truck, Barrier Transport (Barrier Mover) & machines of similar nature. Operation of Churn Drills and machines of a similar nature, Stetco Silent Hoist and machines of similar nature, Vac-Alls, Meyers Machines, John Beam and machines of a similar nature, Ross Carriers and Travel Lifts and machines of a similar nature, Bulldozers, Scrapers and Turn-a-Pulls: Tugger Hoists (Used exclusively for handling excavated material); Tractors with attachments, Hyster and Roustabout Cranes, Cherrypickers. Austin Western, Grove and machines of a similar nature, Scoopmobiles, Monorails, Conveyors, Trenchers: Loaders-Rubber Tired and Tractor: Barber Greene and Eimco Loaders and Eimco Backhoes; Mighty Midget and similar breakers and Tampers, Curb and Gutter Pavers and Motor Patrol, Motor Graders and all machines of a similar nature. Locomotives 10 Tons or under. Mini-Max, Break-Tech and machines of a similar nature; Milling machines, robotic and demolition machines and machines of a similar nature, shot blaster, skid steer machines and machines of a similar nature including bobcat, pile rig rubber-tired excavator (37,000 lbs. and under), 2 man auger.

Effective Period: 7/1/2017 - 6/30/2018
Wage Rate per Hour: $65.31
Supplemental Benefit Rate per Hour: $36.87
Supplemental Note: $66.34 on overtime
Shift Wage Rate: $104.50

Engineer - Heavy Construction Operating Engineer III

Minor Equipment such as Tractors, Post Hole Diggers, Ditch Witch (Walk Behind), Road Finishing Machines, Rollers five tons and under, Tugger Hoists, Dual Purpose Trucks, Fork Lifts, and Dempsey Dumpers, Fireperson.

Effective Period: 7/1/2017 - 6/30/2018
Wage Rate per Hour: $61.93
Supplemental Benefit Rate per Hour: $36.87
Supplemental Note: $66.34 on overtime
Shift Wage Rate: $99.09

Engineer - Heavy Construction Maintenance Engineer I

Installing, Repairing, Maintaining, Dismantling and Manning of all equipment including Steel Cutting, Bending and Heat Sealing Machines, Mechanical Heaters, Grout Pumps, Bentonite Pumps & Plants, Screening Machines, Fusion Coupling Machines, Tunnel Boring Machines Moles and Machines of a similar nature, Power Packs, Mechanical Hydraulic Jacks; all drill rigs including but not limited to Churn, Rotary Caisson, Raised Bore & Drills of a similar nature; Personnel, Inspection & Safety Boats or any boats used to perform functions of same, Mine Hoists, Whirlies, all Climbing Cranes, all Tower Cranes, including but not limited to Truck Mounted and Crawler Type and machines of similar nature; Maintaining Hydraulic Drills and machines of a similar nature; Well Point System-Installation and dismantling; Burning, Welding, all Pumps regardless of size and/or motor power, except River Cofferdam Pumps and Wells Point Pumps; Motorized Buggies (three or more); equipment used in the cleaning and televising of sewers, but not limited to jet-rodder/vacuum truck, vacall/vactor, closed circuit television inspection equipment; high powered water pumps, jet pumps; screed machines and concrete finishing machines of a similar nature; vermeers.

Effective Period: 7/1/2017 - 6/30/2018
Wage Rate per Hour: $65.00
Supplemental Benefit Rate per Hour: $36.87
Supplemental Note: $66.34 on overtime
Shift Wage Rate: $104.00

Engineer - Heavy Construction Maintenance Engineer II

On Base Mounted Tower Cranes

Effective Period: 7/1/2017 - 6/30/2018
Wage Rate per Hour: $85.53
Supplemental Benefit Rate per Hour: $36.87
Supplemental Note: $66.34 on overtime
Shift Wage Rate: $136.85

Engineer - Heavy Construction Maintenance Engineer III

On Generators, Light Towers

Effective Period: 7/1/2017 - 6/30/2018
Wage Rate per Hour: $42.73
Supplemental Benefit Rate per Hour: $36.87
Supplemental Note: $66.34 on overtime
Shift Wage Rate: $68.37

Engineer - Heavy Construction Maintenance Engineer IV

On Pumps and Mixers including mud sucking

Effective Period: 7/1/2017 - 6/30/2018
Wage Rate per Hour: $43.86
Supplemental Benefit Rate per Hour: $36.87
Supplemental Note: $66.34 on overtime
Shift Wage Rate: $70.18

Engineer - Heavy Construction Oilers I

Gradalls, Cold Planer Grader, Concrete Pumps, Driving Truck Cranes, Driving and Operating Fuel and Grease Trucks.

Effective Period: 7/1/2017 - 6/30/2018
Wage Rate per Hour: $58.57
Supplemental Benefit Rate per Hour: $36.87
Supplemental Note: $66.34 on overtime
Shift Wage Rate: $93.71

Engineer - Heavy Construction Oilers II

All gasoline, electric, diesel or air operated Shovels, Draglines, Backhoes, Keystones, Pavers, Gunite Machines, Battery of Compressors, Crawler Cranes, two-person Trenching Machines.

Effective Period: 7/1/2017 - 6/30/2018
Wage Rate per Hour: $40.36
Supplemental Benefit Rate per Hour: $36.87

Supplemental Note: $66.34 on overtime
Shift Wage Rate: $64.58

Engineer - Steel Erection Maintenance Engineers

Derrick, Travelers, Tower, Crawler Tower and Climbing Cranes

Effective Period: 7/1/2017 - 6/30/2018
Wage Rate per Hour: $61.13
Supplemental Benefit Rate per Hour: $35.41
Supplemental Note: $63.67 on overtime
Shift Wage Rate: $97.81

Engineer - Steel Erection Oiler I

On a Truck Crane

Effective Period: 7/1/2017 - 6/30/2018
Wage Rate per Hour: $57.21
Supplemental Benefit Rate per Hour: $35.41
Supplemental Note: $63.67 on overtime
Shift Wage Rate: $91.54

Engineer - Steel Erection Oiler II

On a Crawler Crane

Effective Period: 7/1/2017 - 6/30/2018
Wage Rate per Hour: $43.54
Supplemental Benefit Rate per Hour: $35.41
Supplemental Note: $63.67 on overtime
Shift Wage Rate: $69.66

Overtime Description

On jobs of more than one shift, if the next shift employee fails to report for work through any cause over which the employer has no control, the employee on duty who works the next shift continues to work at the single time rate.

Overtime

Double time the regular rate after an 8 hour day.
Double time the regular time rate for Saturday.
Double time the regular rate for Sunday.
Double time the regular rate for work on the following holiday(s).

Paid Holidays

New Year's Day
Lincoln's Birthday
President's Day
Memorial Day
Independence Day

Labor Day
Columbus Day
Veteran's Day
Thanksgiving Day
Day after Thanksgiving
Christmas Day
Employees must work at least one day in the payroll week in which the holiday occurs to receive the paid holiday

---

Engineer - Building Work Maintenance Engineers I

Installing, repairing, maintaining, dismantling (of all equipment including: Steel Cutting and Bending Machines, Mechanical Heaters, Mine Hoists, Climbing Cranes, Tower Cranes, Linden Peine, Lorain, Liebherr, Mannes, or machines of a similar nature, Well Point Systems, Deep Well Pumps, Concrete Mixers with loading Device, Concrete Plants, Motor Generators when used for temporary power and lights), skid steer machines of a similar nature including bobcat.

Effective Period: 7/1/2017 - 6/30/2018
Wage Rate per Hour: $58.30
Supplemental Benefit Rate per Hour: $35.41
Supplemental Note: $63.67 on overtime

Engineer - Building Work Maintenance Engineers II

On Pumps, Generators, Mixers and Heaters

Effective Period: 7/1/2017 - 6/30/2018
Wage Rate per Hour: $45.28
Supplemental Benefit Rate per Hour: $35.41
Supplemental Note: $63.67 on overtime

Engineer - Building Work Oilers I

All gasoline, electric, diesel or air operated Gradealls: Concrete Pumps, Overhead Cranes in Power Houses: Their duties shall be to assist the Engineer in oiling, greasing and repairing of all machines; Driving Truck Cranes: Driving and Operating Fuel and Grease Trucks, Cherrypickers (hydraulic cranes) over 70,000 GVW, and machines of a similar nature.

Effective Period: 7/1/2017 - 6/30/2018
Wage Rate per Hour: $55.42
Supplemental Benefit Rate per Hour: $35.41
Supplemental Note: $63.67 on overtime

Engineer - Building Work Oilers II

Oilers on Crawler Cranes, Backhoes, Trenching Machines, Gunite Machines, Compressors (three or more in Battery).

Effective Period: 7/1/2017 - 6/30/2018

Wage Rate per Hour: $41.16
Supplemental Benefit Rate per Hour: $35.41
Supplemental Note: $63.67 on overtime

Overtime Description

On jobs of more than one shift, if an Employee fails to report for work through any cause over which the Employer has no control, the Employee on duty will continue to work at the rate of single time.

Overtime

Double time the regular rate after an 8 hour day.
Double time the regular time rate for Saturday.
Double time the regular rate for Sunday.
Double time the regular rate for work on the following holiday(s).

Paid Holidays

New Year's Day
Lincoln's Birthday
President's Day
Memorial Day
Independence Day
Labor Day
Columbus Day
Veteran's Day
Thanksgiving Day
Christmas Day
Employees must work at least one day in the payroll week in which the holiday occurs to receive the paid holiday

Shift Rates

Off Shift: double time the regular hourly rate.

(Local #15)

ENGINEER - CITY SURVEYOR AND CONSULTANT

Party Chief

Effective Period: 7/1/2017 - 6/30/2018
Wage Rate per Hour: $38.18
Supplemental Benefit Rate per Hour: $20.15
Supplemental Note: Overtime Benefit Rate - $27.65 per hour (time & one half) $35.15 per hour (double time).

Instrument Person

Effective Period: 7/1/2017 - 6/30/2018
Wage Rate per Hour: $31.47
Supplemental Benefit Rate per Hour: $20.15

Supplemental Note: Overtime Benefit Rate - $27.65 per hour (time & one half) $35.15 per hour (double time).

Rodperson

Effective Period: 7/1/2017 - 6/30/2018
Wage Rate per Hour: $27.24
Supplemental Benefit Rate per Hour: $20.15
Supplemental Note: Overtime Benefit Rate - $27.65 per hour (time & one half) $35.15 per hour (double time).

Overtime Description

Time and one half the regular rate after an 8 hour day, Time and one half the regular rate for Saturday for the first eight hours worked, Double time the regular time rate for Saturday for work performed in excess of eight hours, Double time the regular rate for Sunday and Double time the regular rate for work on a holiday.

Paid Holidays

New Year's Day
Lincoln's Birthday
President's Day
Memorial Day
Independence Day
Labor Day
Columbus Day
Veteran's Day
Thanksgiving Day
Day after Thanksgiving
Christmas Day
Employees must work at least one day in the payroll week in which the holiday occurs to receive the paid holiday

(Operating Engineer Local #15-D)

ENGINEER - FIELD (BUILDING CONSTRUCTION)
(Construction of Building Projects, Concrete Superstructures, etc.)

Field Engineer - BC Party Chief

Effective Period: 7/1/2017 - 6/30/2018
Wage Rate per Hour: $60.10
Supplemental Benefit Rate per Hour: $32.15
Supplemental Note: Overtime Benefit Rate - $44.90 per hour (time & one half) $57.65 per hour (double time).

Field Engineer - BC Instrument Person

Effective Period: 7/1/2017 - 6/30/2018
Wage Rate per Hour: $46.69
Supplemental Benefit Rate per Hour: $32.15

Supplemental Note: Overtime Benefit Rate - $44.90 per hour (time & one half) $57.65 per hour (double time).

Field Engineer - BC Rodperson

Effective Period: 7/1/2017 - 6/30/2018
Wage Rate per Hour: $30.20
Supplemental Benefit Rate per Hour: $32.15
Supplemental Note: Overtime Benefit Rate - $44.90 per hour (time & one half) $57.65 per hour (double time).

Overtime Description

Time and one half the regular rate after a 7 hour work and time and one half the regular rate for Saturday for the first seven hours worked, Double time the regular time rate for Saturday for work performed in excess of seven hours, Double time the regular rate for Sunday and Double time the regular rate for work on a holiday.

Paid Holidays

New Year's Day
President's Day
Good Friday
Memorial Day
Independence Day
Labor Day
Columbus Day
Veteran's Day
Thanksgiving Day
Christmas Day
Employees must work at least one day in the payroll week in which the holiday occurs to receive the paid holiday

(Operating Engineer Local #15-D)

ENGINEER - FIELD (HEAVY CONSTRUCTION)
(Construction of Roads, Tunnels, Bridges, Sewers, Building Foundations, Engineering Structures etc.)

Field Engineer - HC Party Chief

Effective Period: 7/1/2017 - 6/30/2018
Wage Rate per Hour: $70.25
Supplemental Benefit Rate per Hour: $34.18
Supplemental Note: Overtime benefit rate - $47.82 per hour (time & one half), $61.46 per hour (double time).

Field Engineer - HC Instrument Person

Effective Period: 7/1/2017 - 6/30/2018
Wage Rate per Hour: $51.64

Supplemental Benefit Rate per Hour: $34.18
Supplemental Note: Overtime benefit rate - $47.82 per hour (time & one half), $61.46 per hour (double time).

Field Engineer - HC Rodperson

Effective Period: 7/1/2017 - 6/30/2018
Wage Rate per Hour: $43.37
Supplemental Benefit Rate per Hour: $34.18
Supplemental Note: Overtime benefit rate - $47.82 per hour (time & one half), $61.46 per hour (double time).

Overtime Description

Time and one half the regular rate after an 8 hour day, Time and one half the regular rate for Saturday for the first eight hours worked, Double time the regular time rate for Saturday for work performed in excess of eight hours, Double time the regular rate for Sunday and Double time the regular rate for work on a holiday.

Paid Holidays

New Year's Day
Lincoln's Birthday
President's Day
Memorial Day
Independence Day
Labor Day
Columbus Day
Veteran's Day
Thanksgiving Day
Christmas Day
Employees must work at least one day in the payroll week in which the holiday occurs to receive the paid holiday

(Operating Engineer Local #15-D)

ENGINEER - FIELD (STEEL ERECTION)

Field Engineer - Steel Erection Party Chief

Effective Period: 7/1/2017 - 6/30/2018
Wage Rate per Hour: $63.64
Supplemental Benefit Rate per Hour: $33.04
Supplemental Note: Overtime benefit rate - $46.11 per hour (time & one half), $59.18 per hour (double time).

Field Engineer - Steel Erection Instrument Person

Effective Period: 7/1/2017 - 6/30/2018
Wage Rate per Hour: $49.59
Supplemental Benefit Rate per Hour: $33.04
Supplemental Note: Overtime benefit rate - $46.11 per hour (time & one half), $59.18 per hour (double time).

Field Engineer - Steel Erection Rodperson

Effective Period: 7/1/2017 - 6/30/2018
Wage Rate per Hour: $33.20
Supplemental Benefit Rate per Hour: $33.04
Supplemental Note: Overtime benefit rate - $46.11 per hour (time & one half), $59.18 per hour (double time).

Overtime Description
Time and one half the regular rate for Saturday for the first eight hours worked.
Double time the regular rate for Saturday for work performed in excess of eight hours.

Overtime
Time and one half the regular rate after an 8 hour day.
Double time the regular rate for Sunday.
Double time the regular rate for work on the following holiday(s).

Paid Holidays
New Year's Day
Lincoln's Birthday
President's Day
Memorial Day
Independence Day
Labor Day
Columbus Day
Veteran's Day
Thanksgiving Day
Christmas Day
Employees must work at least one day in the payroll week in which the holiday occurs to receive the paid holiday

(Operating Engineer Local #15-D)

ENGINEER - OPERATING

Operating Engineer - Road & Heavy Construction I

Back Filling Machines, Cranes, Mucking Machines and Dual Drum Paver.

Effective Period: 7/1/2017 - 6/30/2018
Wage Rate per Hour: $76.60
Supplemental Benefit Rate per Hour: $31.10
Supplemental Note: $56.50 overtime hours
Shift Wage Rate: $122.56

Operating Engineer - Road & Heavy Construction II

Backhoes, Power Shovels, Hydraulic Clam Shells, Steel Erection, Moles and machines of a similar nature.

Effective Period: 7/1/2017 - 6/30/2018
Wage Rate per Hour: $79.28
Supplemental Benefit Rate per Hour: $31.10
Supplemental Note: $56.50 overtime hours
Shift Wage Rate: $126.85

Operating Engineer - Road & Heavy Construction III

Mine Hoists, Cranes, etc. (Used as Mine Hoists)

Effective Period: 7/1/2017 - 6/30/2018
Wage Rate per Hour: $81.80
Supplemental Benefit Rate per Hour: $31.10
Supplemental Note: $56.50 overtime hours
Shift Wage Rate: $130.88

Operating Engineer - Road & Heavy Construction IV

Gradealls, Keystones, Cranes on land or water (with digging buckets), Bridge Cranes, Vermeer Cutter and machines of a similar nature, Trenching Machines.

Effective Period: 7/1/2017 - 6/30/2018
Wage Rate per Hour: $79.85
Supplemental Benefit Rate per Hour: $31.10
Supplemental Note: $56.50 overtime hours
Shift Wage Rate: $127.76

Operating Engineer - Road & Heavy Construction V

Pile Drivers & Rigs (employing Dock Builder foreperson): Derrick Boats, Tunnel Shovels.

Effective Period: 7/1/2017 - 6/30/2018
Wage Rate per Hour: $78.29
Supplemental Benefit Rate per Hour: $31.10
Supplemental Note: $56.50 overtime hours
Shift Wage Rate: $125.26

Operating Engineer - Road & Heavy Construction VI

Mixers (Concrete with loading attachment), Concrete Pavers, Cableways, Land Derricks, Power Houses (Low Air Pressure Units).

Effective Period: 7/1/2017 - 6/30/2018
Wage Rate per Hour: $74.42
Supplemental Benefit Rate per Hour: $31.10
Supplemental Note: $56.50 overtime hours
Shift Wage Rate: $119.07

Operating Engineer - Road & Heavy Construction VII

Barrier Movers , Barrier Transport and Machines of a Similar Nature.

Effective Period: 7/1/2017 - 6/30/2018
Wage Rate per Hour: $60.22
Supplemental Benefit Rate per Hour: $31.10
Supplemental Note: $56.50 overtime hours
Shift Wage Rate: $96.35

Operating Engineer - Road & Heavy Construction VIII

Utility Compressors

Effective Period: 7/1/2017 - 6/30/2018
Wage Rate per Hour: $46.88
Supplemental Benefit Rate per Hour: $31.10
Supplemental Note: $56.50 overtime hours
Shift Wage Rate: $58.92

Operating Engineer - Road & Heavy Construction IX

Horizontal Boring Rig

Effective Period: 7/1/2017 - 6/30/2018
Wage Rate per Hour: $70.79
Supplemental Benefit Rate per Hour: $31.10
Supplemental Note: $56.50 overtime hours
Shift Wage Rate: $113.26

Operating Engineer - Road & Heavy Construction X

Elevators (manually operated as personnel hoist).

Effective Period: 7/1/2017 - 6/30/2018
Wage Rate per Hour: $65.12
Supplemental Benefit Rate per Hour: $31.10
Supplemental Note: $56.50 overtime hours
Shift Wage Rate: $104.19

Operating Engineer - Road & Heavy Construction XI

Compressors (Portable 3 or more in battery), Driving of Truck Mounted Compressors, Well-point Pumps, Tugger Machines Well Point Pumps, Churn Drill.

Effective Period: 7/1/2017 - 6/30/2018
Wage Rate per Hour: $50.73
Supplemental Benefit Rate per Hour: $31.10
Supplemental Note: $56.50 overtime hours
Shift Wage Rate: $81.17

Operating Engineer - Road & Heavy Construction XII

All Drills and Machines of a similar nature.

Effective Period: 7/1/2017 - 6/30/2018
Wage Rate per Hour: $75.19
Supplemental Benefit Rate per Hour: $31.10
Supplemental Note: $56.50 overtime hours
Shift Wage Rate: $120.30

Operating Engineer - Road & Heavy Construction XIII

Concrete Pumps, Concrete Plant, Stone Crushers, Double Drum Hoist, Power Houses (other than above).

Effective Period: 7/1/2017 - 6/30/2018
Wage Rate per Hour: $72.84
Supplemental Benefit Rate per Hour: $31.10
Supplemental Note: $56.50 overtime hours
Shift Wage Rate: $116.54

Operating Engineer - Road & Heavy Construction XIV

Concrete Mixer

Effective Period: 7/1/2017 - 6/30/2018
Wage Rate per Hour: $69.67
Supplemental Benefit Rate per Hour: $31.10
Supplemental Note: $56.50 overtime hours
Shift Wage Rate: $111.47

Operating Engineer - Road & Heavy Construction XV

Compressors (Portable Single or two in Battery, not over 100 feet apart), Pumps (River Cofferdam) and Welding Machines, Push Button Machines, All Engines Irrespective of Power (Power-Pac) used to drive auxiliary equipment, Air, Hydraulic, etc.

Effective Period: 7/1/2017 - 6/30/2018
Wage Rate per Hour: $47.18
Supplemental Benefit Rate per Hour: $31.10
Supplemental Note: $56.50 overtime hours
Shift Wage Rate: $75.49

Operating Engineer - Road & Heavy Construction XVI

Concrete Breaking Machines, Hoists (Single Drum), Load Masters, Locomotives (over ten tons) and Dinkies over ten tons, Hydraulic Crane-Second Engineer.

Effective Period: 7/1/2017 - 6/30/2018
Wage Rate per Hour: $66.56
Supplemental Benefit Rate per Hour: $31.10

Supplemental Note: $56.50 overtime hours
Shift Wage Rate: $106.50

Operating Engineer - Road & Heavy Construction XVII

On-Site concrete plant engineer, On-site Asphalt Plant Engineer, and Vibratory console.

Effective Period: 7/1/2017 - 6/30/2018
Wage Rate per Hour: $67.07
Supplemental Benefit Rate per Hour: $31.10
Supplemental Note: $56.50 overtime hours
Shift Wage Rate: $107.31

Operating Engineer - Road & Heavy Construction XVIII

Tower Crane

Effective Period: 7/1/2017 - 6/30/2018
Wage Rate per Hour: $95.98
Supplemental Benefit Rate per Hour: $31.10
Supplemental Note: $56.50 overtime hours
Shift Wage Rate: $153.57

Operating Engineer - Paving I

Asphalt Spreaders, Autogrades (C.M.I.), Roto/Mil

Effective Period: 7/1/2017 - 6/30/2018
Wage Rate per Hour: $74.42
Supplemental Benefit Rate per Hour: $31.10
Supplemental Note: $56.50 overtime hours
Shift Wage Rate: $119.07

Operating Engineer - Paving II

Asphalt Roller

Effective Period: 7/1/2017 - 6/30/2018
Wage Rate per Hour: $72.50
Supplemental Benefit Rate per Hour: $31.10
Supplemental Note: $56.50 overtime hours
Shift Wage Rate: $116.00

Operating Engineer - Paving III

Asphalt Plants

Effective Period: 7/1/2017 - 6/30/2018
Wage Rate per Hour: $61.43

Supplemental Benefit Rate per Hour: $31.10
Supplemental Note: $56.50 overtime hours
Shift Wage Rate: $98.29

Operating Engineer - Concrete I

Cranes

Effective Period: 7/1/2017 - 6/30/2018
Wage Rate per Hour: $79.50
Supplemental Benefit Rate per Hour: $31.10
Supplemental Note: $56.50 overtime hours

Operating Engineer - Concrete II

Compressors

Effective Period: 7/1/2017 - 6/30/2018
Wage Rate per Hour: $47.54
Supplemental Benefit Rate per Hour: $31.10
Supplemental Note: $56.50 overtime hours

Operating Engineer - Concrete III

Micro-traps (Negative Air Machines), Vac-All Remediation System.

Effective Period: 7/1/2017 - 6/30/2018
Wage Rate per Hour: $63.66
Supplemental Benefit Rate per Hour: $31.10
Supplemental Note: $56.50 overtime hours

Operating Engineer - Steel Erection I

Three Drum Derricks

Effective Period: 7/1/2017 - 6/30/2018
Wage Rate per Hour: $82.23
Supplemental Benefit Rate per Hour: $31.10
Supplemental Note: $56.50 overtime hours
Shift Wage Rate: $131.57

Operating Engineer - Steel Erection II

Cranes, 2 Drum Derricks, Hydraulic Cranes, Fork Lifts and Boom Trucks.

Effective Period: 7/1/2017 - 6/30/2018
Wage Rate per Hour: $79.04
Supplemental Benefit Rate per Hour: $31.10
Supplemental Note: $56.50 overtime hours
Shift Wage Rate: $126.46

Operating Engineer - Steel Erection III

Compressors, Welding Machines.

Effective Period: 7/1/2017 - 6/30/2018
Wage Rate per Hour: $47.14
Supplemental Benefit Rate per Hour: $31.10
Supplemental Note: $56.50 overtime hours
Shift Wage Rate: $75.42

Operating Engineer - Steel Erection IV

Compressors - Not Combined with Welding Machine.

Effective Period: 7/1/2017 - 6/30/2018
Wage Rate per Hour: $44.91
Supplemental Benefit Rate per Hour: $31.10
Supplemental Note: $56.50 overtime hours
Shift Wage Rate: $71.86

Operating Engineer - Building Work I

Forklifts, Plaster (Platform machine), Plaster Bucket, Concrete Pump and all other equipment used for hoisting material.

Effective Period: 7/1/2017 - 6/30/2018
Wage Rate per Hour: $62.87
Supplemental Benefit Rate per Hour: $31.10
Supplemental Note: $56.50 overtime hours

Operating Engineer - Building Work II

Compressors, Welding Machines (Cutting Concrete-Tank Work), Paint Spraying, Sandblasting, Pumps (with the exclusion of Concrete Pumps), All Engines irrespective of Power (Power-Pac) used to drive Auxiliary Equipment, Air, Hydraulic, Jacking System, etc.

Effective Period: 7/1/2017 - 6/30/2018
Wage Rate per Hour: $47.01
Supplemental Benefit Rate per Hour: $31.10
Supplemental Note: $56.50 overtime hours

Operating Engineer - Building Work III

Double Drum

Effective Period: 7/1/2017 - 6/30/2018
Wage Rate per Hour: $71.60
Supplemental Benefit Rate per Hour: $31.10
Supplemental Note: $56.50 overtime hours

Operating Engineer - Building Work IV

Stone Derrick, Cranes, Hydraulic Cranes Boom Trucks.

Effective Period: 7/1/2017 - 6/30/2018
Wage Rate per Hour: $75.87
Supplemental Benefit Rate per Hour: $31.10
Supplemental Note: $56.50 overtime hours

Operating Engineer - Building Work V

Dismantling and Erection of Cranes, Relief Engineer.

Effective Period: 7/1/2017 - 6/30/2018
Wage Rate per Hour: $69.88
Supplemental Benefit Rate per Hour: $31.10
Supplemental Note: $56.50 overtime hours

Operating Engineer - Building Work VI

4 Pole Hoist, Single Drum Hoists.

Effective Period: 7/1/2017 - 6/30/2018
Wage Rate per Hour: $69.14
Supplemental Benefit Rate per Hour: $31.10
Supplemental Note: $56.50 overtime hours

Operating Engineer - Building Work VII

Rack & Pinion and House Cars

Effective Period: 7/1/2017 - 6/30/2018
Wage Rate per Hour: $54.92
Supplemental Benefit Rate per Hour: $31.10
Supplemental Note: $56.50 overtime hours
For New House Car projects Wage Rate per Hour $43.77

Overtime Description

On jobs of more than one shift, if an Employee fails to report for work through any cause over which the Employer has no control, the Employee on duty will continue to work at the rate of single time.

For House Cars and Rack & Pinion only: Overtime paid at time and one-half for all hours in excess of eight hours in a day, Saturday, Sunday and Holidays worked.

Overtime

Double time the regular rate after an 8 hour day.
Double time the regular time rate for Saturday.
Double time the regular rate for Sunday.
Double time the regular rate for work on the following holiday(s).

Paid Holidays
New Year's Day
Lincoln's Birthday
President's Day
Memorial Day
Independence Day
Labor Day
Columbus Day
Veteran's Day
Thanksgiving Day
Day after Thanksgiving
Christmas Day
Employees must work at least one day in the payroll week in which the holiday occurs to receive the paid holiday

Shift Rates
For Steel Erection Only: Shifts may be worked at the single time rate at other than the regular working hours (8:00 A.M. to 4:30 P.M.) on the following work ONLY: Heavy construction jobs on work below the street level, over railroad tracks and on building jobs.

(Operating Engineer Local #14)

FLOOR COVERER
(Interior vinyl composition tile, sheath vinyl linoleum and wood parquet tile including site preparation and synthetic turf not including site preparation)

Floor Coverer

Effective Period: 7/1/2017 - 6/30/2018
Wage Rate per Hour: $50.50
Supplemental Benefit Rate per Hour: $45.88

Overtime
Time and one half the regular rate after an 8 hour day.
Time and one half the regular rate for Saturday.
Double time the regular rate for Sunday.

Overtime Holidays
Double time the regular rate for work on the following holiday(s).
New Year's Day
President's Day
Memorial Day
Independence Day
Labor Day
Columbus Day

Presidential Election Day
Thanksgiving Day
Day after Thanksgiving
Christmas Day

Paid Holidays
1/2 day on Christmas Eve if work is performed in the A.M.
1/2 day on New Year's Eve if work is performed in the A.M.

Shift Rates
Two shifts may be utilized with the first shift working 8:00 A.M. to the end of the shift at the straight time of pay. The second shift will receive one hour at double time rate for the last hour of the shift. (eight for seven, nine for eight).

(Carpenters District Council)

GLAZIER
(New Construction, Remodeling, and Alteration)

Glazier

Effective Period: 7/1/2017 - 6/30/2018
Wage Rate per Hour: $44.70
Supplemental Benefit Rate per Hour: $40.99
Supplemental Note: Supplemental Benefit Overtime Rate: $50.09

Overtime Description
An optional 8th hour can be worked at straight time rate. If 9th hour is worked, then both hours or more (8th & 9th or more) will be at the double time rate of pay.

Overtime
Double time the regular rate after a 7 hour day.
Double time the regular time rate for Saturday.
Double time the regular rate for Sunday.

Overtime Holidays
Double time the regular rate for work on the following holiday(s).
New Year's Day
President's Day
Memorial Day
Independence Day
Labor Day
Thanksgiving Day
Day after Thanksgiving
Christmas Day

Paid Holidays
None

Shift Rates
Shifts shall be any 7 hours beyond 4:00 P.M. for which the glazier shall receive 8 hours pay for 7 hours worked.

(Local #1281)

GLAZIER - REPAIR & MAINTENANCE
(For the Installation of Glass - All repair and maintenance work on a particular building, whenever performed, where the total cumulative contract value is under $127,628. Except where enumerated (i.e. plate glass windows) does not apply to non-residential buildings.)

Craft Jurisdiction for repair, maintenance and fabrication

Plate glass replacement, Residential glass replacement, Residential mirrors and shower doors, Storm windows and storm doors, Residential replacement windows, Herculite door repairs, Door closer repairs, Retrofit apartment house (non commercial buildings), Glass tinting.

Effective Period: 7/1/2017 - 6/30/2018
Wage Rate per Hour: $24.13
Supplemental Benefit Rate per Hour: $21.12

Overtime
Time and one half the regular rate after an 8 hour day.
Double time the regular rate for Sunday.
Time and one half the regular hourly rate after 40 hours in any work week.

Paid Holidays
New Year's Day
President's Day
Memorial Day
Independence Day
Labor Day
Thanksgiving Day
Day after Thanksgiving
Christmas Day

(Local #1281)

HEAT AND FROST INSULATOR

Heat & Frost Insulator

Effective Period: 7/1/2017 - 6/30/2018
Wage Rate per Hour: $58.38
Supplemental Benefit Rate per Hour: $39.46

Overtime Description
Double time shall be paid for supplemental benefits during overtime work.
8th hour paid at time and one half.

Overtime
Double time the regular rate after an 8 hour day.
Double time the regular time rate for Saturday.
Double time the regular rate for Sunday.

Overtime Holidays
Double time the regular rate for work on the following holiday(s).
New Year's Day
Martin Luther King Jr. Day
President's Day
Memorial Day
Independence Day
Columbus Day
Veteran's Day
Thanksgiving Day
Day after Thanksgiving
Christmas Day

Triple time the regular rate for work on the following holiday(s).
Labor Day

Paid Holidays
None

Shift Rates
The first shift shall work seven hours at the regular straight time rate. The second and third shift shall work seven hours the regular straight time hourly rate plus a fourteen percent wage and benefit premium.
Off hour work in occupied or retail buildings may be worked on weekdays with an increment of $1.00 per hour and eight hours pay for seven (7) hours worked. Double time will apply for over seven (7) hours worked on weekdays, weekends or holidays.

(Local #12) (BCA)

HOUSE WRECKER
(TOTAL DEMOLITION)

House Wrecker - Tier A

On all work sites the first, second, eleventh and every third House Wrecker thereafter will be Tier A House Wreckers (i.e. 1st, 2nd, 11th, 14th etc). Other House Wreckers may be Tier B House Wreckers.

Effective Period: 7/1/2017 - 6/30/2018
Wage Rate per Hour: $36.33
Supplemental Benefit Rate per Hour: $29.22

House Wrecker - Tier B

Effective Period: 7/1/2017 - 6/30/2018
Wage Rate per Hour: $25.56
Supplemental Benefit Rate per Hour: $21.63

Overtime
Time and one half the regular rate after an 8 hour day.
Time and one half the regular rate for Saturday.
Double time the regular rate for Sunday.

Overtime Holidays
Double time the regular rate for work on the following holiday(s).
New Year's Day
President's Day
Memorial Day
Independence Day
Labor Day
Thanksgiving Day
Christmas Day

Paid Holidays
None

(Mason Tenders District Council)

IRON WORKER - ORNAMENTAL

Iron Worker - Ornamental

Effective Period: 7/1/2017 - 6/30/2018

Wage Rate per Hour: $44.20
Supplemental Benefit Rate per Hour: $51.57
Supplemental Note: Supplemental benefits are to be paid at the applicable overtime rate when overtime is in effect.

Overtime Description
Time and one half the regular rate after a 7 hour day for a maximum of two hours on any regular work day (the 8th and 9th hour) and double time shall be paid for all work on a regular work day thereafter, time and one half the regular rate for Saturday for the first seven hours of work and double time shall be paid for all work on a Saturday thereafter.

Overtime
Double time the regular rate for Sunday.

Overtime Holidays
Double time the regular rate for work on the following holiday(s).
New Year's Day
President's Day
Memorial Day
Independence Day
Labor Day
Thanksgiving Day
Christmas Day

Paid Holidays
None

Shift Rates
For off shift work - 8 hours pay for 7 hours of work. When two or three shifts are employed on a job, Monday through Friday, the workday for each shift shall be seven hours and paid for ten and one-half hours at the single time rate. When two or three shifts are worked on Saturday, Sunday or holidays, each shift shall be seven hours and paid fifteen and three-quarters hours.

(Local #580)

IRON WORKER - STRUCTURAL

Iron Worker - Structural

Effective Period: 7/1/2017 - 6/30/2018
Wage Rate per Hour: $50.05
Supplemental Benefit Rate per Hour: $72.53
Supplemental Note: Supplemental benefits are to be paid at the applicable overtime rate when overtime is in effect.

Overtime Description

Monday through Friday- the first eight hours are paid at straight time, the 9th and 10th hours are paid at time and one-half the regular rate, all additional weekday overtime is paid at double the regular rate. Saturdays- the first eight hours are paid at time and one-half the regular rate, double time thereafter. Sunday-all shifts are paid at double time.

Overtime

Time and one half the regular rate after an 8 hour day.
Time and one half the regular rate for Saturday.
Double time the regular rate for Sunday.

Overtime Holidays

Double time the regular rate for work on the following holiday(s).
New Year's Day
President's Day
Memorial Day
Independence Day
Labor Day
Thanksgiving Day
Christmas Day

Paid Holidays

1/2 day on Christmas Eve if work is performed in the A.M.
1/2 day on New Year's Eve if work is performed in the A.M.

Shift Rates

Monday through Friday - First Shift: First eight hours are paid at straight time, the 9th & 10th hours are paid at time and a half, double time paid thereafter. Second and third Shifts: First eight hours are paid at time and one-half, double time thereafter. Saturdays: All shifts, first eight hours paid at time and one-half, double time thereafter: Sunday all shifts are paid at double time.

(Local #40 & #361)

LABORER
(Foundation, Concrete, Excavating, Street Pipe Layer and Common)

Laborer

Excavation and foundation work for buildings, heavy construction, engineering work, and hazardous waste removal in connection with the above work. Landscaping tasks in connection with heavy construction work, engineering work and building projects. Projects include, but are not limited to pollution plants, sewers, parks, subways, bridges, highways, etc.

Effective Period: 7/1/2017 - 6/30/2018
Wage Rate per Hour: $41.50
Supplemental Benefit Rate per Hour: $40.63

Overtime
Time and one half the regular rate after an 8 hour day.
Time and one half the regular rate for Saturday.
Double time the regular rate for Sunday.

Overtime Holidays
Double time the regular rate for work on the following holiday(s).
New Year's Day
Memorial Day
Independence Day
Labor Day
Columbus Day
Thanksgiving Day
Christmas Day

Paid Holidays
Labor Day
Thanksgiving Day

Shift Rates
When two shifts are employed, single time rate shall be paid for each shift. When three shifts are found necessary, each shift shall work seven and one half hours (7 ½), but shall be paid for eight (8) hours of labor, and be permitted one half hour for lunch.

(Local #731)

LANDSCAPING
(Landscaping tasks, as well as tree pruning, tree removing, spraying and maintenance in connection with the planting of street trees and the planting of trees in city parks but not when such activities are performed as part of, or in connection with, other construction or reconstruction projects.)

Landscaper (Above 6 years experience)

Effective Period: 7/1/2017 - 6/30/2018
Wage Rate per Hour: $28.75
Supplemental Benefit Rate per Hour: $15.55

Landscaper (3 - 6 years experience)

Effective Period: 7/1/2017 - 6/30/2018
Wage Rate per Hour: $27.75
Supplemental Benefit Rate per Hour: $15.55

Landscaper (up to 3 years experience)

Effective Period: 7/1/2017 - 6/30/2018
Wage Rate per Hour: $25.25
Supplemental Benefit Rate per Hour: $15.55

Groundperson

Effective Period: 7/1/2017 - 6/30/2018
Wage Rate per Hour: $25.25
Supplemental Benefit Rate per Hour: $15.55

Tree Remover / Pruner

Effective Period: 7/1/2017 - 6/30/2018
Wage Rate per Hour: $33.75
Supplemental Benefit Rate per Hour: $15.55

Landscaper Sprayer (Pesticide Applicator)

Effective Period: 7/1/2017 - 6/30/2018
Wage Rate per Hour: $23.75
Supplemental Benefit Rate per Hour: $15.55

Watering - Plant Maintainer

Effective Period: 7/1/2017 - 6/30/2018
Wage Rate per Hour: $18.72
Supplemental Benefit Rate per Hour: $15.55

Overtime Description

For all overtime work performed, supplemental benefits shall include an additional seventy-five ($0.75) cents per hour.

Overtime

Time and one half the regular rate after an 8 hour day.
Time and one half the regular rate for Saturday.
Double time the regular rate for Sunday.
Time and one half the regular rate for work on a holiday plus the day's pay.

Paid Holidays

New Year's Day
Memorial Day
Independence Day
Labor Day
Thanksgiving Day
Christmas Day

Shift Rates

Work performed on a 4pm to 12am shift has a 15% differential. Work performed on a 12am to 8am shift has a 20% differential.

(Local #175)

MARBLE MECHANIC

Marble Setter

Effective Period: 7/1/2017 - 6/30/2018
Wage Rate per Hour: $52.74
Supplemental Benefit Rate per Hour: $38.67

Marble Finisher

Effective Period: 7/1/2017 - 6/30/2018
Wage Rate per Hour: $41.46
Supplemental Benefit Rate per Hour: $36.64

Marble Polisher

Effective Period: 7/1/2017 - 6/30/2018
Wage Rate per Hour: $37.93
Supplemental Benefit Rate per Hour: $28.33

Overtime Description

Supplemental Benefit contributions are to be made at the applicable overtime rates. Time and one half the regular rate after a 7 hour day or time and one half the regular rate after an 8 hour day - chosen by Employer at the start of the project and then would last for the full duration of the project.

Overtime

Time and one half the regular rate for Saturday.
Double time the regular rate for Sunday.

Overtime Holidays

Double time the regular rate for work on the following holiday(s).
New Year's Day
President's Day
Good Friday
Memorial Day
Independence Day
Labor Day
Columbus Day
Veteran's Day
Thanksgiving Day
Day after Thanksgiving

Christmas Day

Paid Holidays
None

(Local #7)

MASON TENDER

Mason Tender

Effective Period: 7/1/2017 - 6/30/2018
Wage Rate per Hour: $37.90
Supplemental Benefit Rate per Hour: $30.59

Overtime
Time and one half the regular rate after an 8 hour day.
Time and one half the regular rate for Saturday.
Double time the regular rate for Sunday.
Saturday may be used as a make-up day at straight time when a day is lost during that week to inclement weather.

Overtime Holidays
Double time the regular rate for work on the following holiday(s).
New Year's Day
President's Day
Memorial Day
Independence Day
Labor Day
Thanksgiving Day
Christmas Day

Paid Holidays
None

Shift Rates
The Employer may work two (2) shifts with the first shift at the straight time wage rate and the second shift receiving eight (8) hours paid for seven (7) hours work at the straight time wage rate.

(Local #79)

MASON TENDER (INTERIOR DEMOLITION WORKER)

Mason Tender Tier A

Tier A Interior Demolition Worker performs all burning, chopping, and other technically skilled tasks related to interior demolition work.

Effective Period: 7/1/2017 - 6/30/2018
Wage Rate per Hour: $36.19
Supplemental Benefit Rate per Hour: $24.25

Mason Tender Tier B

Tier B Interior Demolition Worker performs manual work and work incidental to demolition work, such as loading and carting of debris from the work site to an area where it can be loaded in to bins/trucks for removal. Also performs clean-up of the site when demolition is completed.

Effective Period: 7/1/2017 - 6/30/2018
Wage Rate per Hour: $25.38
Supplemental Benefit Rate per Hour: $18.57

Overtime
Time and one half the regular rate after an 8 hour day.
Time and one half the regular rate for Sunday.

Overtime Holidays
Double time the regular rate for work on the following holiday(s).
New Year's Day
President's Day
Memorial Day
Independence Day
Labor Day
Thanksgiving Day
Christmas Day

Paid Holidays
None

(Local #79)

METALLIC LATHER

Metallic Lather

Effective Period: 7/1/2017 - 6/30/2018

Wage Rate per Hour: $46.28
Supplemental Benefit Rate per Hour: $42.92
Supplemental Note: Supplemental benefits for overtime are paid at the appropriate overtime rate.

Overtime Description
Overtime would be time and one half the regular rate after a seven (7) or eight (8) hours workday, which would be set at the start of the job.

Overtime
Time and one half the regular rate for Saturday.
Double time the regular rate for Sunday.

Overtime Holidays
Double time the regular rate for work on the following holiday(s).
New Year's Day
Washington's Birthday
Memorial Day
Independence Day
Labor Day
Columbus Day
Thanksgiving Day
Christmas Day

Paid Holidays
1/2 day on Christmas Eve if work is performed in the A.M.
1/2 day on New Year's Eve if work is performed in the A.M.

Shift Rates
There will be no shift differential paid on the first shift if more than one shift is employed. The shift differential will remain $12/hour on the second and third shift for the first eight (8) hours if worked. There will be no pyramiding on overtime worked on second and third shifts. The time and one half (1.5x) rate will be against the base wage rate, not the shift differential

(Local #46)

MILLWRIGHT

Millwright

Effective Period: 7/1/2017 - 6/30/2018
Wage Rate per Hour: $51.50
Supplemental Benefit Rate per Hour: $52.41

Overtime
Time and one half the regular rate after an 8 hour day.
Time and one half the regular rate for Saturday.

Double time the regular rate for Sunday.
Saturday may be used as a make-up day at straight time when a day is lost during that week to inclement weather.

Overtime Holidays

Double time the regular rate for work on the following holiday(s).
New Year's Day
President's Day
Good Friday
Memorial Day
Independence Day
Labor Day
Columbus Day
Presidential Election Day
Thanksgiving Day
Christmas Day

Paid Holidays

1/2 day on Christmas Eve if work is performed in the A.M.
1/2 day on New Year's Eve if work is performed in the A.M.

Shift Rates

The first shift shall receive the straight time rate of pay. The second shift receives the straight time rate of pay plus fifteen (15%) per cent. Members of the second shift shall be allowed one half hour to eat, with this time being included in the hours of the workday established. There must be a first shift to work a second shift. All additional hours worked shall be paid at the time and one-half rate of pay plus fifteen (15%) per cent for weekday hours.

(Local #740)

MOSAIC MECHANIC

Mosaic Mechanic - Mosaic & Terrazzo Mechanic

Effective Period: 7/1/2017 - 6/30/2018
Wage Rate per Hour: $46.86
Supplemental Benefit Rate per Hour: $40.65
Supplemental Note: Supplemental benefits for overtime to be paid at the rate of $51.67 per hour.

Mosaic Mechanic - Mosaic & Terrazzo Finisher

Effective Period: 7/1/2017 - 6/30/2018
Wage Rate per Hour: $45.26
Supplemental Benefit Rate per Hour: $40.63
Supplemental Note: Supplemental benefits for overtime to be paid at the rate of $51.65 per hour.

Mosaic Mechanic - Machine Operator Grinder

Effective Period: 7/1/2017 - 6/30/2018
Wage Rate per Hour: $45.26
Supplemental Benefit Rate per Hour: $40.63
Supplemental Note: Supplemental benefits for overtime to be paid at the rate of $51.65 per hour.

Overtime
Time and one half the regular rate after a 7 hour day.
Time and one half the regular rate for Saturday.
Double time the regular rate for Sunday.

Overtime Holidays
Double time the regular rate for work on the following holiday(s).
New Year's Day
Washington's Birthday
Good Friday
Independence Day
Labor Day
Columbus Day
Veteran's Day
Thanksgiving Day
Day after Thanksgiving
Christmas Day

Paid Holidays
None

(Local #7)

PAINTER

Painter - Brush & Roller

Effective Period: 7/1/2017 - 6/30/2018
Wage Rate per Hour: $42.50
Supplemental Benefit Rate per Hour: $28.62
Supplemental Note: $ 33.25 on overtime

Spray & Scaffold / Decorative / Sandblast

Effective Period: 7/1/2017 - 6/30/2018
Wage Rate per Hour: $45.50
Supplemental Benefit Rate per Hour: $28.62
Supplemental Note: $ 33.25 on overtime

Overtime
Time and one half the regular rate after a 7 hour day.
Time and one half the regular rate for Saturday.
Time and one half the regular rate for Sunday.

Overtime Holidays
Time and one half the regular rate for work on the following holiday(s).
New Year's Day
President's Day
Memorial Day
Independence Day
Labor Day
Columbus Day
Thanksgiving Day
Christmas Day

Paid Holidays
None

(District Council of Painters #9)

PAINTER - METAL POLISHER

METAL POLISHER

Effective Period: 7/1/2017 - 6/30/2018
Wage Rate per Hour: $29.73
Supplemental Benefit Rate per Hour: $7.06

METAL POLISHER - NEW CONSTRUCTION

Effective Period: 7/1/2017 - 6/30/2018
Wage Rate per Hour: $30.68
Supplemental Benefit Rate per Hour: $7.06

METAL POLISHER - SCAFFOLD OVER 34 FEET

Effective Period: 7/1/2017 - 6/30/2018
Wage Rate per Hour: $33.23
Supplemental Benefit Rate per Hour: $7.06

Overtime Description
All work performed on Saturdays shall be paid at time-in-a half. The exception being; for suspended scaffold work and work deemed as a construction project; an eight (8) hour shift lost during the week due to

circumstances beyond the control of the employer, up to amaximumof eight (8) hours per week, may be worked on Saturday at the straight time rate.

Overtime

Time and one half the regular rate after an 8 hour day.
Time and one half the regular rate for Saturday.
Double time the regular rate for Sunday.
Saturday may be used as a make-up day at straight time when a day is lost during that week to inclement weather.
Triple time the regular rate for work on the following holiday(s).

Paid Holidays

New Year's Day
Martin Luther King Jr. Day
President's Day
Memorial Day
Independence Day
Labor Day
Columbus Day
Veteran's Day
Thanksgiving Day
Day after Thanksgiving
Christmas Day

Shift Rates

Four Days a week at Ten (10) hours straight a day.

Local 8A-28A

PAINTER - STRIPER

Striper (paint)

Effective Period: 7/1/2017 - 6/30/2018
Wage Rate per Hour: $35.00
Supplemental Benefit Rate per Hour: $12.37
Supplemental Note: Overtime Supplemental Benefit rate - $8.02; New Hire Rate (0-3 months) - $0.00

Lineperson (thermoplastic)

Effective Period: 7/1/2017 - 6/30/2018
Wage Rate per Hour: $39.00
Supplemental Benefit Rate per Hour: $12.37
Supplemental Note: Overtime Supplemental Benefit rate - $8.02; New Hire Rate (0-3 months) - $0.00

Overtime

Time and one half the regular rate after an 8 hour day.
Time and one half the regular rate for Saturday.
Double time the regular rate for Sunday.
Time and one half the regular rate for work on the following holiday(s).

Paid Holidays

New Year's Day
Good Friday
Memorial Day
Independence Day
Labor Day
Columbus Day
Presidential Election Day
Thanksgiving Day
Day after Thanksgiving
Christmas Day

Shift Rates

Employees hired before April 1, 2003: 15% night shift premium differential for work commenced at 9:00 PM or later.

Vacation

Employees with one to two years service shall accrue vacation based on hours worked: 250 hours worked - 1 day vacation; 500 hours worked - 2 days vacation; 750 hours worked - 3 days vacation; 900 hours worked - 4 days vacation; 1,000 hours worked - 5 days vacation. Employees with two to five years service receive two weeks vacation. Employees with five to twenty years service receive three weeks vacation. Employees with twenty to twenty-five years service receive four weeks vacation. Employees with 25 or more years service receive five weeks vacation. Vacation must be taken during winter months. 2 Personal Days except employees hired after 4/1/12 who do not have 2 years of service.

(Local #917)

PAINTER - STRUCTURAL STEEL

Painters on Structural Steel

Effective Period: 7/1/2017 - 9/30/2017
Wage Rate per Hour: $49.50
Supplemental Benefit Rate per Hour: $37.08

Effective Period: 10/1/2017 - 6/30/2018
Wage Rate per Hour: $50.00
Supplemental Benefit Rate per Hour: $38.33

Painter - Power Tool

Effective Period: 7/1/2017 - 9/30/2017
Wage Rate per Hour: $55.50

Supplemental Benefit Rate per Hour: $37.08
Overtime Wage Rate: $6.00 above the "Painters on Structural Steel" overtime rate.

Effective Period: 10/1/2017 - 6/30/2018
Wage Rate per Hour: $56.00
Supplemental Benefit Rate per Hour: $38.33
Overtime Wage Rate: $6.00 above the "Painters on Structural Steel" overtime rate.

Overtime Description

Supplemental Benefits shall be paid for each hour worked, up to forty (40) hours per week for the period of May 1st to November 15th or up to fifty (50) hours per week for the period of November 16th to April 30th.

Overtime

Time and one half the regular rate after a 7 hour day.
Time and one half the regular rate for Saturday.
Time and one half the regular rate for Sunday.

Overtime Holidays

Double time the regular rate for work on the following holiday(s).
New Year's Day
Memorial Day
Independence Day
Labor Day
Thanksgiving Day
Christmas Day

Paid Holidays

None

Shift Rates

Regular hourly rates plus a ten per cent (10%) differential

(Local #806)

PAPERHANGER

Paperhanger

Effective Period: 7/1/2017 - 6/30/2018
Wage Rate per Hour: $44.89
Supplemental Benefit Rate per Hour: $31.13
Supplemental Note: Supplemental benefits are to be paid at the appropriate straight time and overtime rate.

Overtime

Time and one half the regular rate after a 7 hour day.
Time and one half the regular rate for Saturday.

Time and one half the regular rate for Sunday.

Overtime Holidays

Time and one half the regular rate for work on the following holiday(s).
New Year's Day
President's Day
Memorial Day
Independence Day
Labor Day
Thanksgiving Day
Day after Thanksgiving
Christmas Day

Paid Holidays

None

Shift Rates

Evening shift - 4:30 P.M. to 12:00 Midnight (regular rate of pay); any work performed before 7:00 A.M. shall be at time and one half the regular base rate of pay.

(District Council of Painters #9)

PAVER AND ROADBUILDER

Paver & Roadbuilder - Formsetter

Effective Period: 7/1/2017 - 6/30/2018
Wage Rate per Hour: $45.85
Supplemental Benefit Rate per Hour: $40.98

Paver & Roadbuilder - Laborer

Paving and road construction work, regardless of material used, including but not limited to preparation of job sites, removal of old surfaces, asphalt and/or concrete, by whatever method, including but not limited to milling; laying of concrete; laying of asphalt for temporary, patchwork, and utility paving (but not production paving); site preparation and incidental work before the installation of rubberized materials and similar surfaces; installation and repair of temporary construction fencing; slurry seal coating, maintenance of safety surfaces; play equipment installation, and other related work.

Effective Period: 7/1/2017 - 6/30/2018
Wage Rate per Hour: $41.98
Supplemental Benefit Rate per Hour: $40.98

Production Paver & Roadbuilder - Screed Person

(Production paving is asphalt paving when using a paving machine or on a project where a paving machine is traditionally used)

Adjustment of paving machinery on production paving jobs.

Effective Period: 7/1/2017 - 6/30/2018
Wage Rate per Hour: $46.45
Supplemental Benefit Rate per Hour: $40.98

Production Paver & Roadbuilder - Raker

Effective Period: 7/1/2017 - 6/30/2018
Wage Rate per Hour: $45.85
Supplemental Benefit Rate per Hour: $40.98

Production Paver & Roadbuilder - Shoveler

General laborer (except removal of surfaces - see Paver and Roadbuilder-Laborer) including but not limited to tamper, AC paint and liquid tar work.

Effective Period: 7/1/2017 - 6/30/2018
Wage Rate per Hour: $42.37
Supplemental Benefit Rate per Hour: $40.98

Overtime Description

If an employee works New Year's Day or Christmas Day, they receive the single time rate plus 25%.

Overtime

Time and one half the regular rate after an 8 hour day.
Time and one half the regular rate for Saturday.
Double time the regular rate for Sunday.

Overtime Holidays

Double time the regular rate for work on the following holiday(s).
Memorial Day
Independence Day
Labor Day
Columbus Day
Thanksgiving Day

Shift Rates

When two shifts are employed, the work period for each shift shall be a continuous eight (8) hours. When three shifts are employed, each shift will work seven and one half (7 ½) hours but will be paid for eight (8) hours since only one half (1/2) hour is allowed for meal time.
When two or more shifts are employed, single time will be paid for each shift.

Night Work - On night work, the first eight (8) hours of work will be paid for at the single time rate, except that production paving work shall be paid at 10% over the single time rate for the screed person, rakers and shovelers directly involved only. This differential is to be paid when there is only one shift and the shift works at night. All other workers will be exempt. Hours worked over eight (8) hours during said shift shall be paid for at the time and one-half rate.

(Local #1010)

PLASTERER

Plasterer

Effective Period: 7/1/2017 - 6/30/2018
Wage Rate per Hour: $44.93
Supplemental Benefit Rate per Hour: $25.15

Overtime

Time and one half the regular rate after an 8 hour day.
Time and one half the regular rate for Saturday.
Double time the regular rate for Sunday.
Saturday may be used as a make-up day at straight time when a day is lost during that week to inclement weather.

Overtime Holidays

Double time the regular rate for work on the following holiday(s).
New Year's Day
President's Day
Memorial Day
Independence Day
Labor Day
Thanksgiving Day
Christmas Day

Paid Holidays

None

Shift Rates

When it is not possible to conduct alteration work during regular work hours, in a building occupied by tenants, said work shall proceed on a shift basis: however work over seven (7) hours in any twenty four (24) hour period, the time after seven (7) hours shall be considered overtime.
The second shift shall start at a time between 3:30 p.m. and 7:00 p.m. and shall consist of seven (7) working hours and shall receive eight (8) hours of wages and benefits at the straight time rate. The workers on the second shift shall be allowed one-half (½) hour to eat with this time being included in the seven (7) hours of work.

(Local #262)

PLASTERER - TENDER

Plasterer - Tender

Effective Period: 7/1/2017 - 6/30/2018
Wage Rate per Hour: $37.90
Supplemental Benefit Rate per Hour: $30.59

Overtime
Time and one half the regular rate after an 8 hour day.
Time and one half the regular rate for Saturday.
Double time the regular rate for Sunday.
Saturday may be used as a make-up day at straight time when a day is lost during that week to inclement weather.

Overtime Holidays
Double time the regular rate for work on the following holiday(s).
New Year's Day
Washington's Birthday
Memorial Day
Independence Day
Labor Day
Presidential Election Day
Thanksgiving Day
Christmas Day

Paid Holidays
None

Shift Rates
When work commences outside regular work hours, workers receive an hour additional (differential) wage and supplement payment. Eight hours pay for seven hours work or nine hours pay for eight hours work.

(Mason Tenders District Council)

PLUMBER

Plumber

Effective Period: 7/1/2017 - 6/30/2018
Wage Rate per Hour: $67.25
Supplemental Benefit Rate per Hour: $31.80
Supplemental Note: Supplemental benefit contributions are to be made at the applicable overtime rates.

Plumber - Temporary Services

Temporary Services - When there are no Plumbers on the job site, there may be three shifts designed to cover the entire twenty-four hour period, including weekends if necessary, at the following rate straight time.

Effective Period: 7/1/2017 - 6/30/2018
Wage Rate per Hour: $53.88
Supplemental Benefit Rate per Hour: $25.36

Overtime Description

Double time the regular rate after a 7 hour day - unless for new construction site work where the plumbing contract price is $1.5 million or less, the hours of labor can be 8 hours per day at the employers option. On Alteration jobs when other mechanical trades at the site are working an eighth hour at straight time, then the plumber shall also work an eighth hour at straight time.

Overtime

Double time the regular time rate for Saturday.
Double time the regular rate for Sunday.

Overtime Holidays

Double time the regular rate for work on the following holiday(s).
New Year's Day
President's Day
Memorial Day
Independence Day
Labor Day
Columbus Day
Veteran's Day
Thanksgiving Day
Day after Thanksgiving
Christmas Day

Shift Rates

Shift work, when directly specified in public agency or authority documents where plumbing contract is $8 million or less, will be permitted. 30% shift premium shall be paid for wages and fringe benefits for 4:00 pm and midnight shifts Monday to Friday. 50% shift premium shall be paid for wages and fringe benefits for 4:00 pm and midnight shift work performed on weekends. For shift work on holidays, double time wages and fringe benefits shall be paid.

(Plumbers Local #1)

PLUMBER (MECHNICAL EQUIPMENT AND SERVICE)

(Mechanical Equipment and Service work shall include any repair and/or replacement of the present plumbing system.)

Plumber

Effective Period: 7/1/2017 - 6/30/2018
Wage Rate per Hour: $41.20
Supplemental Benefit Rate per Hour: $15.41

Overtime
Time and one half the regular rate after an 8 hour day.
Time and one half the regular rate for Saturday.
Time and one half the regular rate for Sunday.

Overtime Holidays
Time and one half the regular rate for work on the following holiday(s).
New Year's Day
President's Day
Memorial Day
Independence Day
Thanksgiving Day
Day after Thanksgiving
Christmas Day

Paid Holidays
None

(Plumbers Local # 1)

PLUMBER (RESIDENTIAL RATES FOR 1, 2 AND 3 FAMILY HOME CONSTRUCTION)

Effective Period: 7/1/2017 - 6/30/2018
Wage Rate per Hour: $46.66
Supplemental Benefit Rate per Hour: $22.95

Overtime
Double time the regular rate after an 8 hour day.
Double time the regular time rate for Saturday.
Double time the regular rate for Sunday.

Overtime Holidays
Double time the regular rate for work on the following holiday(s).
New Year's Day
President's Day
Memorial Day
Independence Day
Labor Day
Columbus Day
Veteran's Day

Thanksgiving Day
Day after Thanksgiving
Christmas Day

Paid Holidays
None

Shift Rates
30% shift premium shall be paid for wages and fringe benefits for 4:00 pm and midnight shifts Monday to Friday. 50% shift premium shall be paid for wages and fringe benefits for 4:00 pm and midnight shift work performed on weekends. For shift work on holidays, double time wages and fringe benefits shall be paid.

(Plumbers Local #1)

PLUMBER: PUMP & TANK
Oil Trades (Installation and Maintenance)

Plumber - Pump & Tank

Effective Period: 7/1/2017 - 6/30/2018
Wage Rate per Hour: $64.22
Supplemental Benefit Rate per Hour: $23.21

Overtime
Time and one half the regular rate after an 8 hour day.
Time and one half the regular rate for Saturday.
Time and one half the regular rate for Sunday.

Overtime Holidays
Time and one half the regular rate for work on the following holiday(s).
New Year's Day
President's Day
Memorial Day
Independence Day
Labor Day
Columbus Day
Veteran's Day
Thanksgiving Day
Day after Thanksgiving
Christmas Day

Paid Holidays
None

Shift Rates

All work outside the regular workday (8:00 A.M. to 3:30 P.M.) is to be paid at time and one half the regular hourly rate

(Plumbers Local #1)

POINTER, WATERPROOFER, CAULKER, SANDBLASTER, STEAMBLASTER
(Exterior Building Renovation)

Journeyperson

Effective Period: 7/1/2017 - 6/30/2018
Wage Rate per Hour: $52.57
Supplemental Benefit Rate per Hour: $25.80

Overtime
Time and one half the regular rate after an 8 hour day.
Time and one half the regular rate for Saturday.
Time and one half the regular rate for Sunday.
Saturday may be used as a make-up day at straight time when a day is lost during that week to inclement weather.

Overtime Holidays
Time and one half the regular rate for work on the following holiday(s).
New Year's Day
Martin Luther King Jr. Day
President's Day
Memorial Day
Independence Day
Labor Day
Thanksgiving Day
Christmas Day

Paid Holidays
None

Shift Rates
All work outside the regular work day (an eight hour workday between the hours of 6:00 A.M. and 4:30 P.M.) is to be paid at time and one half the regular rate.

(Bricklayer District Council)

ROOFER

Roofer

Effective Period: 7/1/2017 - 6/30/2018
Wage Rate per Hour: $41.50
Supplemental Benefit Rate per Hour: $32.27

Overtime
Time and one half the regular rate after an 8 hour day.
Time and one half the regular rate for Saturday.
Time and one half the regular rate for Sunday.

Overtime Holidays
Time and one half the regular rate for work on the following holiday(s).
New Year's Day
Memorial Day
Independence Day
Labor Day
Thanksgiving Day
Christmas Day

Paid Holidays
None

Shift Rates
Second shift - Regular hourly rate plus a 10% differential. Third shift - Regular hourly rate plus a 15% differential.

(Local #8)

SHEET METAL WORKER

Sheet Metal Worker

Effective Period: 7/1/2017 - 6/30/2018
Wage Rate per Hour: $48.90
Supplemental Benefit Rate per Hour: $48.00
Supplemental Note: Supplemental benefit contributions are to be made at the applicable overtime rates.

Sheet Metal Worker - Fan Maintenance

(The temporary operation of fans or blowers in new or existing buildings for heating and/or ventilation, and/or air conditioning prior to the completion of the project.)

Effective Period: 7/1/2017 - 6/30/2018
Wage Rate per Hour: $39.12
Supplemental Benefit Rate per Hour: $48.00

Sheet Metal Worker - Duct Cleaner

Effective Period: 7/1/2017 - 6/30/2018
Wage Rate per Hour: $12.90
Supplemental Benefit Rate per Hour: $8.07

Overtime
Time and one half the regular rate after an 8 hour day.
Time and one half the regular rate for Saturday.
Double time the regular rate for Sunday.

Overtime Holidays
Double time the regular rate for work on the following holiday(s).
New Year's Day
Martin Luther King Jr. Day
President's Day
Memorial Day
Independence Day
Labor Day
Columbus Day
Veteran's Day
Thanksgiving Day
Day after Thanksgiving
Christmas Day

Paid Holidays
None

Shift Rates
Work that can only be performed outside regular working hours (eight hours of work between 7:30 A.M. and 3:30 P.M.) - First shift (work between 3:30 P.M. and 11:30 P.M.) - 10% differential above the established hourly rate. Second shift (work between 11:30 P.M. and 7:30 A.M.) - 15% differential above the established hourly rate.

For Fan Maintenance: On all full shifts of fan maintenance work the straight time hourly rate of pay will be paid for each shift, including nights, Saturdays, Sundays, and holidays.

(Local #28)

SHEET METAL WORKER - SPECIALTY
(Decking & Siding)

Sheet Metal Specialty Worker

The first worker to perform this work must be paid at the rate of the Sheet Metal Worker. The second and third workers shall be paid the Specialty Worker Rate. The ratio of One Sheet Metal Worker, then Two Specialty Workers shall be utilized thereafter.

Effective Period: 7/1/2017 - 6/30/2018
Wage Rate per Hour: $44.57
Supplemental Benefit Rate per Hour: $25.02
Supplemental Note: Supplemental benefit contributions are to be made at the applicable overtime rates.

Overtime
Time and one half the regular rate after an 8 hour day.
Time and one half the regular rate for Saturday.
Double time the regular rate for Sunday.

Overtime Holidays
Double time the regular rate for work on the following holiday(s).
New Year's Day
Martin Luther King Jr. Day
President's Day
Memorial Day
Independence Day
Labor Day
Columbus Day
Veteran's Day
Thanksgiving Day
Christmas Day

Paid Holidays
None

(Local #28)

SHIPYARD WORKER

Shipyard Mechanic - First Class

Effective Period: 7/1/2017 - 6/30/2018
Wage Rate per Hour: $28.12
Supplemental Benefit Rate per Hour: $3.03

Shipyard Mechanic - Second Class

Effective Period: 7/1/2017 - 6/30/2018

Wage Rate per Hour: $23.35
Supplemental Benefit Rate per Hour: $2.85

Shipyard Laborer - First Class

Effective Period: 7/1/2017 - 6/30/2018
Wage Rate per Hour: $20.96
Supplemental Benefit Rate per Hour: $2.76

Shipyard Laborer - Second Class

Effective Period: 7/1/2017 - 6/30/2018
Wage Rate per Hour: $15.24
Supplemental Benefit Rate per Hour: $2.54

Shipyard Dockhand - First Class

Effective Period: 7/1/2017 - 6/30/2018
Wage Rate per Hour: $22.89
Supplemental Benefit Rate per Hour: $2.83

Shipyard Dockhand - Second Class

Effective Period: 7/1/2017 - 6/30/2018
Wage Rate per Hour: $16.51
Supplemental Benefit Rate per Hour: $2.58

Overtime Description

Work performed on holiday is paid double time the regular hourly wage rate plus holiday pay.

Overtime

Time and one half the regular rate after an 8 hour day.
Time and one half the regular rate for Saturday.
Double time the regular rate for Sunday.
Time and one half the regular hourly rate after 40 hours in any work week.

Paid Holidays

New Year's Day
Martin Luther King Jr. Day
President's Day
Good Friday
Memorial Day
Independence Day
Labor Day
Thanksgiving Day
Day after Thanksgiving
Christmas Day

Based on Survey Data

SIGN ERECTOR
(Sheet Metal, Plastic, Electric, and Neon)

Sign Erector

Effective Period: 7/1/2017 - 6/30/2018
Wage Rate per Hour: $47.67
Supplemental Benefit Rate per Hour: $50.67

Overtime
Time and one half the regular rate after a 7 hour day.
Time and one half the regular rate for Saturday.
Time and one half the regular rate for Sunday.
Time and one half the regular rate for work on the following holiday(s).

Paid Holidays
New Year's Day
Washington's Birthday
Memorial Day
Independence Day
Labor Day
Columbus Day
Election Day
Thanksgiving Day
Day after Thanksgiving
Christmas Day

Shift Rates
Time and one half the regular hourly rate is to be paid for all hours worked outside the regular workday either (7:00 A.M. through 2:30 P.M.) or (8:00 A.M. through 3:30 P.M.)

(Local #137)

STEAMFITTER

Steamfitter I

Effective Period: 7/1/2017 - 6/30/2018
Wage Rate per Hour: $55.50
Supplemental Benefit Rate per Hour: $55.29

Supplemental Note: Overtime supplemental benefit rate: $109.84

Steamfitter -Temporary Services

The steamfitters shall not do any other work and shall not be permitted to work more than one shift in a twenty-four hour day. When steamfitters are present during the regular working day, no temporary services steamfitter will be required

Effective Period: 7/1/2017 - 6/30/2018
Wage Rate per Hour: $42.18
Supplemental Benefit Rate per Hour: $44.84

Overtime
Double time the regular rate after a 7 hour day.
Double time the regular time rate for Saturday.
Double time the regular rate for Sunday.

Overtime Holidays
Double time the regular rate for work on the following holiday(s).
New Year's Day
President's Day
Memorial Day
Independence Day
Labor Day
Columbus Day
Veteran's Day
Thanksgiving Day
Day after Thanksgiving
Christmas Day

Paid Holidays
None

Shift Rates
Work performed between 3:30 P.M. and 7:00 A.M. and on Saturdays, Sundays and Holidays shall be at double time the regular hourly rate and paid at the overtime supplemental benefit rate above.

Steamfitter II

For heating, ventilation, air conditioning and mechanical public works contracts with a dollar value not to exceed $15,000,000 and for fire protection/sprinkler public works contracts not to exceed $1,500,000.

Effective Period: 7/1/2017 - 6/30/2018
Wage Rate per Hour: $55.50
Supplemental Benefit Rate per Hour: $55.29
Supplemental Note: Overtime supplemental benefit rate: $109.84

Steamfitter -Temporary Services

The steamfitters shall not do any other work and shall not be permitted to work more than one shift in a twenty-four hour day. When steamfitters are present during the regular working day, no temporary services steamfitter will be required.

Effective Period: 7/1/2017 - 6/30/2018
Wage Rate per Hour: $42.18
Supplemental Benefit Rate per Hour: $44.84

Overtime

Double time the regular rate after an 8 hour day.
Double time the regular time rate for Saturday.
Double time the regular rate for Sunday.

Overtime Holidays

Double time the regular rate for work on the following holiday(s).
New Year's Day
President's Day
Memorial Day
Independence Day
Labor Day
Columbus Day
Veteran's Day
Thanksgiving Day
Day after Thanksgiving
Christmas Day

Paid Holidays

None

Shift Rates

May be performed outside of the regular workday except Saturday, Sunday and Holidays. A shift shall consist of eight working hours. All work performed in excess of eight hours shall be paid at double time. No shift shall commence after 7:00 P.M. on Friday or 7:00 P.M. the day before holidays. All work performed after 12:01 A.M. Saturday or 12:01 A.M. the day before a Holiday will be paid at double time. When shift work is performed the wage rate for regular time worked is a thirty percent premium together with fringe benefits.

On Transit Authority projects, where work is performed in the vicinity of tracks all shift work on weekends and holidays may be performed at the regular shift rates.

Local #638

STEAMFITTER - REFRIGERATION AND AIR CONDITIONER
(Maintenance and Installation Service Person)

Refrigeration and Air Conditioner Mechanic

Effective Period: 7/1/2017 - 6/30/2018
Wage Rate per Hour: $39.50
Supplemental Benefit Rate per Hour: $15.81

Refrigeration and Air Conditioner Service Person V

Effective Period: 7/1/2017 - 6/30/2018
Wage Rate per Hour: $32.46
Supplemental Benefit Rate per Hour: $14.16

Refrigeration and Air Conditioner Service Person IV

Effective Period: 7/1/2017 - 6/30/2018
Wage Rate per Hour: $26.89
Supplemental Benefit Rate per Hour: $12.80

Refrigeration and Air Conditioner Service Person III

Filter changing and maintenance thereof, oil and greasing, tower and coil cleaning, scraping and painting, general housekeeping, taking of water samples.

Effective Period: 7/1/2017 - 6/30/2018
Wage Rate per Hour: $23.08
Supplemental Benefit Rate per Hour: $11.79

Refrigeration and Air Conditioner Service Person II

Filter changing and maintenance thereof, oil and greasing, tower and coil cleaning, scraping and painting, general housekeeping, taking of water samples.

Effective Period: 7/1/2017 - 6/30/2018
Wage Rate per Hour: $19.14
Supplemental Benefit Rate per Hour: $10.85

Refrigeration and Air Conditioner Service Person I

Filter changing and maintenance thereof, oil and greasing, tower and coil cleaning, scraping and painting, general housekeeping, taking of water samples.

Effective Period: 7/1/2017 - 6/30/2018
Wage Rate per Hour: $14.00
Supplemental Benefit Rate per Hour: $9.76

Overtime

Time and one half the regular rate after an 8 hour day.
Time and one half the regular rate for Saturday.
Double time the regular rate for Sunday.

Overtime Holidays

Double time the regular rate for work on the following holiday(s).
New Year's Day
Independence Day
Labor Day
Veteran's Day
Thanksgiving Day
Christmas Day

Double time and one half the regular rate for work on the following holiday(s).
Martin Luther King Jr. Day
President's Day
Memorial Day
Columbus Day

Paid Holidays

New Year's Day
Martin Luther King Jr. Day
President's Day
Memorial Day
Independence Day
Labor Day
Columbus Day
Veteran's Day
Thanksgiving Day
Christmas Day

(Local #638B)

STONE MASON - SETTER

Stone Mason - Setter

Effective Period: 7/1/2017 - 6/30/2018
Wage Rate per Hour: $53.62
Supplemental Benefit Rate per Hour: $41.65

Overtime

Time and one half the regular rate after a 7 hour day.
Time and one half the regular rate for Saturday.
Double time the regular rate for Sunday.

Overtime Holidays

Double time the regular rate for work on the following holiday(s).
New Year's Day
Washington's Birthday
Good Friday

Memorial Day
Independence Day
Labor Day
Thanksgiving Day
Christmas Day

Paid Holidays

1/2 day on Christmas Eve if work is performed in the A.M.

Shift Rates

For all work outside the regular workday (8:00 A.M. to 3:30 P.M. Monday through Friday), the pay shall be straight time plus a ten percent (10%) differential.

(Bricklayers District Council)

TAPER

Drywall Taper

Effective Period: 7/1/2017 - 6/30/2018
Wage Rate per Hour: $47.82
Supplemental Benefit Rate per Hour: $22.68

Overtime

Time and one half the regular rate after a 7 hour day.
Time and one half the regular rate for Saturday.
Time and one half the regular rate for Sunday.

Overtime Holidays

Time and one half the regular rate for work on the following holiday(s).
New Year's Day
Martin Luther King Jr. Day
President's Day
Good Friday
Memorial Day
Independence Day
Labor Day
Columbus Day
Thanksgiving Day
Christmas Day

Paid Holidays

Any worker who reports to work on Christmas Eve or New Year's Eve pursuant to his employer's instruction shall be entitled to three (3) hours afternoon pay without working.

(Local #1974)

TELECOMMUNICATION WORKER
(Voice Installation Only)

Telecommunication Worker

Effective Period: 7/1/2017 - 6/30/2018
Wage Rate per Hour: $40.35
Supplemental Benefit Rate per Hour: $13.19
Supplemental Note: The above rate applies for Manhattan, Bronx, Brooklyn, Queens. $12.64 for Staten Island only.

Overtime
Time and one half the regular rate after a 7 hour day.
Time and one half the regular rate for Saturday.
Time and one half the regular rate for Sunday.

Overtime Holidays
Time and one half the regular rate for work on the following holiday(s).
New Year's Day
Lincoln's Birthday
Washington's Birthday
Memorial Day
Independence Day
Labor Day
Columbus Day
Election Day
Veteran's Day
Thanksgiving Day
Christmas Day

Paid Holidays
New Year's Day
Lincoln's Birthday
Washington's Birthday
Memorial Day
Independence Day
Labor Day
Columbus Day
Election Day
Veteran's Day
Thanksgiving Day
Christmas Day
Employees have the option of observing either Martin Luther King's Birthday or the day after Thanksgiving instead of Lincoln's Birthday

Shift Rates

For any workday that starts before 8A.M. or ends after 6P.M. there is a 10% differential for the applicable worker's hourly rate.

Vacation

After 6 months.....one week.
After 12 months but less than 7 years.....two weeks.
After 7 or more but less than 15 years.....three weeks.
After 15 years or more but less than 25 years.....four weeks.

(C.W.A.)

TILE FINISHER

Tile Finisher

Effective Period: 7/1/2017 - 6/30/2018
Wage Rate per Hour: $41.13
Supplemental Benefit Rate per Hour: $31.18

Overtime

Time and one half the regular rate after a 7 hour day.
Time and one half the regular rate for Saturday.
Double time the regular rate for Sunday.

Overtime Holidays

Double time the regular rate for work on the following holiday(s).
New Year's Day
President's Day
Good Friday
Memorial Day
Independence Day
Labor Day
Columbus Day
Veteran's Day
Thanksgiving Day
Day after Thanksgiving
Christmas Day

Paid Holidays

None

Shift Rates

Off shift work day (work performed outside the regular 8:00 A.M. to 3:30 P.M. workday): shift differential of one and one quarter (1¼) times the regular straight time rate of pay for the seven hours of actual off-shift work.

(Local #7)

TILE LAYER - SETTER

Tile Layer - Setter

Effective Period: 7/1/2017 - 6/30/2018
Wage Rate per Hour: $53.19
Supplemental Benefit Rate per Hour: $35.35

Overtime
Time and one half the regular rate after a 7 hour day.
Time and one half the regular rate for Saturday.
Double time the regular rate for Sunday.

Overtime Holidays
Double time the regular rate for work on the following holiday(s).
New Year's Day
President's Day
Good Friday
Memorial Day
Independence Day
Labor Day
Columbus Day
Veteran's Day
Thanksgiving Day
Day after Thanksgiving
Christmas Day

Shift Rates
Off shift work day (work performed outside the regular 8:00 A.M. to 3:30 P.M. workday): shift differential of one and one quarter (1¼) times the regular straight time rate of pay for the seven hours of actual off-shift work.

(Local #7)

TIMBERPERSON

Timberperson

Effective Period: 7/1/2017 - 6/30/2018
Wage Rate per Hour: $48.00
Supplemental Benefit Rate per Hour: $49.16

Overtime

Time and one half the regular rate after an 8 hour day.
Time and one half the regular rate for Saturday.
Double time the regular rate for Sunday.
Saturday may be used as a make-up day at straight time when a day is lost during that week to inclement weather.
Time and one half the regular hourly rate after 40 hours in any work week.

Overtime Holidays

Double time the regular rate for work on the following holiday(s).
New Year's Day
President's Day
Memorial Day
Independence Day
Labor Day
Columbus Day
Presidential Election Day
Thanksgiving Day
Christmas Day

Paid Holidays

None

Shift Rates

Off shift work commencing between 5:00 P.M. and 11:00 P.M. shall work eight and one half hours allowing for one half hour for lunch. The wage rate shall be 113% of the straight time hourly wage rate.

(Local #1536)

TUNNEL WORKER

Blasters, Mucking Machine Operators (Compressed Air Rates)

Effective Period: 7/1/2017 - 6/30/2018
Wage Rate per Hour: $62.37
Supplemental Benefit Rate per Hour: $52.39

Tunnel Workers (Compressed Air Rates)

Effective Period: 7/1/2017 - 6/30/2018
Wage Rate per Hour: $60.21
Supplemental Benefit Rate per Hour: $50.65

Top Nipper (Compressed Air Rates)

Effective Period: 7/1/2017 - 6/30/2018

Wage Rate per Hour: $59.11
Supplemental Benefit Rate per Hour: $49.74

Outside Lock Tender, Outside Gauge Tender,Muck Lock Tender (Compressed Air Rates)

Effective Period: 7/1/2017 - 6/30/2018
Wage Rate per Hour: $58.04
Supplemental Benefit Rate per Hour: $48.81

Bottom Bell & Top Bell Signal Person: Shaft Person (Compressed Air Rates)

Effective Period: 7/1/2017 - 6/30/2018
Wage Rate per Hour: $58.04
Supplemental Benefit Rate per Hour: $48.81

Changehouse Attendant: Powder Watchperson (Compressed Air Rates)

Effective Period: 7/1/2017 - 6/30/2018
Wage Rate per Hour: $50.87
Supplemental Benefit Rate per Hour: $46.11

Blasters (Free Air Rates)

Effective Period: 7/1/2017 - 6/30/2018
Wage Rate per Hour: $59.52
Supplemental Benefit Rate per Hour: $50.03

Tunnel Workers (Free Air Rates)

Effective Period: 7/1/2017 - 6/30/2018
Wage Rate per Hour: $56.97
Supplemental Benefit Rate per Hour: $47.89

All Others (Free Air Rates)

Effective Period: 7/1/2017 - 6/30/2018
Wage Rate per Hour: $52.63
Supplemental Benefit Rate per Hour: $44.29

Microtunneling (Free Air Rates)

Effective Period: 7/1/2017 - 6/30/2018
Wage Rate per Hour: $45.58
Supplemental Benefit Rate per Hour: $38.31

Overtime Description

For Repair-Maintenance Work on Existing Equipment and Facilities - Time and one half the regular rate after a 7 hour day, or for Saturday, or for Sunday. Double time the regular rate for work on a holiday.
For Small-Bore Micro Tunneling Machines - Time and one-half the regular rate shall be paid for all overtime.

Overtime

Double time the regular rate after an 8 hour day.
Double time the regular time rate for Saturday.
Double time the regular rate for Sunday.
Double time the regular rate for work on the following holiday(s).

Paid Holidays

New Year's Day
Lincoln's Birthday
President's Day
Memorial Day
Independence Day
Labor Day
Columbus Day
Election Day
Veteran's Day
Thanksgiving Day
Christmas Day

(Local #147)

WELDER

TO BE PAID AT THE RATE OF THE JOURNEYPERSON IN THE TRADE PERFORMING THE WORK.

OFFICE OF THE COMPTROLLER

CITY OF NEW YORK

220 APPRENTICESHIP PREVAILING WAGE SCHEDULE

APPENDIX

Pursuant to Labor Law §220 (3-e), only apprentices who are individually registered in a bona fide program to which the employer contractor is a participant and registered with the New York State Department of Labor, may be employed on a public work project.
Any employee listed on a payroll at an apprentice wage rate, who is not registered as above, shall be paid the journey person wage rate for the classification of work he actually performed.

Apprentice ratios are established to ensure the proper safety, training and supervision of apprentices. A ratio establishes the number of journey workers required for each apprentice in a program and on a job site. Ratios are interpreted as follows: in the case of a 1:1, 1:4 ratio, there must be one journey worker for the first apprentice, and four additional journey workers for each subsequent apprentice.

TABLE OF CONTENTS

CLASSIFICATION	PAGE
ASBESTOS HANDLER	3
BOILERMAKER	3
BRICKLAYER	4
CARPENTER	5
CARPENTER - HIGH RISE CONCRETE FORMS	6
CEMENT MASON	7
CEMENT AND CONCRETE WORKER	7
DERRICKPERSON & RIGGER (STONE)	8
DOCKBUILDER/PILE DRIVER	9
ELECTRICIAN	10
ELEVATOR CONSTRUCTOR	12
ELEVATOR REPAIR & MAINTENANCE	13
ENGINEER	14
ENGINEER - OPERATING	15
FLOOR COVERER	16
GLAZIER	16
HEAT & FROST INSULATOR	17
HOUSE WRECKER	18
IRON WORKER - ORNAMENTAL	18
IRON WORKER - STRUCTURAL	19
LABORER (FOUNDATION, CONCRETE, EXCAVATING, STREET PIPE LAYER & COMMON)	20
MARBLE MECHANICS	21
MASON TENDER	22
METALLIC LATHER	23
MILLWRIGHT	23
PAVER AND ROADBUILDER	24
PAINTER	24
PAINTER - METAL POLISHER	25
PAINTER - STRUCTURAL STEEL	26
PLASTERER	26
PLASTERER - TENDER	27
PLUMBER	28
POINTER, WATERPROOFER, CAULKER, SANDBLASTER, STEAMBLASTER	29
ROOFER	30
SHEET METAL WORKER	30
SIGN ERECTOR	32
STEAMFITTER	33
STONE MASON - SETTER	34
TAPER	35
TILE LAYER - SETTER	35
TIMBERPERSON	36

ASBESTOS HANDLER
(Ratio of Apprentice Journeyperson: 1 to 1, 1 to 3)

Asbestos Handler (First 1000 Hours)

Effective Period: 7/1/2017 - 6/30/2018
Wage Rate Per Hour: 78% of Journeyperson's rate
Supplemental Benefit Rate Per Hour: $14.25

Asbestos Handler (Second 1000 Hours)

Effective Period: 7/1/2017 - 6/30/2018
Wage Rate Per Hour: 80% of Journeyperson's rate
Supplemental Benefit Rate Per Hour: $14.25

Asbestos Handler (Third 1000 Hours)

Effective Period: 7/1/2017 - 6/30/2018
Wage Rate Per Hour: 83% of Journeyperson's rate
Supplemental Benefit Rate Per Hour: $14.25

Asbestos Handler (Fourth 1000 Hours)

Effective Period: 7/1/2017 - 6/30/2018
Wage Rate Per Hour: 89% of Journeyperson's rate
Supplemental Benefit Rate Per Hour: $14.25

(Local #78)

BOILERMAKER
(Ratio of Apprentice to Journeyperson: 1 to 1, 1 to 3)

Boilermaker (First Year)

Effective Period: 7/1/2017 - 6/30/2018
Wage Rate Per Hour: 65% of Journeyperson's rate
Supplemental Benefit Rate Per Hour: $30.84
Effective 1/1/2018 - Supplemental Benefit Rate Per Hour: $31.26

Boilermaker (Second Year: 1st Six Months)

Effective Period: 7/1/2017 - 6/30/2018

Wage Rate Per Hour: 70% of Journeyperson's rate
Supplemental Benefit Rate Per Hour: $32.57
Effective 1/1/2018 - Supplemental Benefit Rate Per Hour: $33.02

Boilermaker (Second Year: 2nd Six Months)

Effective Period: 7/1/2017 - 6/30/2018
Wage Rate Per Hour: 75% of Journeyperson's rate
Supplemental Benefit Rate Per Hour: $34.29
Effective 1/1/2018 - Supplemental Benefit Rate Per Hour: $34.78

Boilermaker (Third Year: 1st Six Months)

Effective Period: 7/1/2017 - 6/30/2018
Wage Rate Per Hour: 80% of Journeyperson's rate
Supplemental Benefit Rate Per Hour: $36.03
Effective 1/1/2018- Supplemental Benefit Rate Per Hour: $36.56

Boilermaker (Third Year: 2nd Six Months)

Effective Period: 7/1/2017 - 6/30/2018
Wage Rate Per Hour: 85% of Journeyperson's rate
Supplemental Benefit Rate Per Hour: $37.76
Effective 1/1/2018 - Supplemental Benefit Rate Per Hour: $38.32

Boilermaker (Fourth Year: 1st Six Months)

Effective Period: 7/1/2017 - 6/30/2018
Wage Rate Per Hour: 90% of Journeyperson's rate
Supplemental Benefit Rate Per Hour: $39.51
Effective 1/1/2018 - Supplemental Benefit Rate Per Hour: $40.09

Boilermaker (Fourth Year: 2nd Six Months)

Effective Period: 7/1/2017 - 6/30/2018
Wage Rate Per Hour: 95% of Journeyperson's rate
Supplemental Benefit Rate Per Hour: $41.22
Effective 1/1/2018- Supplemental Benefit Rate Per Hour: $41.84

(Local #5)

BRICKLAYER
(Ratio of Apprentice to Journeyperson: 1 to 1, 1 to 4)

Bricklayer (First 750 Hours)

Effective Period: 7/1/2017 - 6/30/2018
Wage Rate Per Hour: 50% of Journeyperson's rate
Supplemental Benefit Rate Per Hour: $18.80

Bricklayer (Second 750 Hours)

Effective Period: 7/1/2017 - 6/30/2018
Wage Rate Per Hour: 60% of Journeyperson's rate
Supplemental Benefit Rate Per Hour: $18.80

Bricklayer (Third 750 Hours)

Effective Period: 7/1/2017 - 6/30/2018
Wage Rate Per Hour: 70% of Journeyperson's rate
Supplemental Benefit Rate Per Hour: $18.80

Bricklayer (Fourth 750 Hours)

Effective Period: 7/1/2017 - 6/30/2018
Wage Rate Per Hour: 80% of Journeyperson's rate
Supplemental Benefit Rate Per Hour: $18.80

Bricklayer (Fifth 750 Hours)

Effective Period: 7/1/2017 - 6/30/2018
Wage Rate Per Hour: 90% of Journeyperson's rate
Supplemental Benefit Rate Per Hour: $18.80

Bricklayer (Sixth 750 Hours)

Effective Period: 7/1/2017 - 6/30/2018
Wage Rate Per Hour: 95% of Journeyperson's rate
Supplemental Benefit Rate Per Hour: $18.80

(Bricklayer District Council)

CARPENTER
(Ratio of Apprentice to Journeyperson: 1 to 1, 1 to 4)

Carpenter (First Year)

Effective Period: 7/1/2017 - 6/30/2018
Wage Rate Per Hour: 40% of Journeyperson's rate
Supplemental Benefit Rate Per Hour For Building Apprentice: $31.34

Supplemental Benefit Rate Per Hour For Heavy Apprentice: $33.03

Carpenter (Second Year)

Effective Period: 7/1/2017 - 6/30/2018
Wage Rate Per Hour: 50% of Journeyperson's rate
Supplemental Benefit Rate Per Hour For Building Apprentice: $31.34
Supplemental Benefit Rate Per Hour For Heavy Apprentice: $33.03

Carpenter (Third Year)

Effective Period: 7/1/2017 - 6/30/2018
Wage Rate Per Hour: 65% of Journeyperson's rate
Supplemental Benefit Rate Per Hour For Building Apprentice: $31.34
Supplemental Benefit Rate Per Hour For Heavy Apprentice: $33.03

Carpenter (Fourth Year)

Effective Period: 7/1/2017 - 6/30/2018
Wage Rate Per Hour: 80% of Journeyperson's rate
Supplemental Benefit Rate Per Hour For Building Apprentice: $31.34
Supplemental Benefit Rate Per Hour For Heavy Apprentice: $33.03

(Carpenters District Council)

CARPENTER - HIGH RISE CONCRETE FORMS
(Ratio of Apprentice to Journeyperson: 1 to 1, 2 to 5)

Carpenter - High Rise (First Year)

Effective Period: 7/1/2017 - 6/30/2018
Wage Rate per Hour: $16.86
Supplemental Benefit Rate per Hour: $16.20

Carpenter - High Rise (Second Year)

Effective Period: 7/1/2017 - 6/30/2018
Wage Rate per Hour: $23.16
Supplemental Benefit Rate per Hour: $16.33

Carpenter - High Rise (Third Year)

Effective Period: 7/1/2017 - 6/30/2018
Wage Rate per Hour: $29.61

Supplemental Benefit Rate per Hour: $16.46

Carpenter - High Rise (Fourth Year)

Effective Period: 7/1/2017 - 6/30/2018
Wage Rate per Hour: $37.07
Supplemental Benefit Rate per Hour: $16.61

(Carpenters District Council)

CEMENT MASON
(Ratio of Apprentice to Journeyperson: 1 to 1, 1 to 4)

Cement Mason (First Year)

Effective Period: 7/1/2017 - 6/30/2018
Wage and Supplemental Rate Per Hour: 50% of Journeyperson's Rate

Cement Mason (Second Year)

Effective Period: 7/1/2017 - 6/30/2018
Wage and Supplemental Rate Per Hour: 60% of Journeyperson's Rate

Cement Mason (Third Year)

Effective Period: 7/1/2017 - 6/30/2018
Wage and Supplemental Rate Per Hour: 70% of Journeyperson's Rate

(Local #780)

CEMENT AND CONCRETE WORKER
(Ratio of Apprentice to Journeyperson: 1 to 1, 1 to 3)

Cement & Concrete Worker (First 1333 hours)

Effective Period: 7/1/2017 - 6/30/2018
Wage Rate Per Hour: 50% of Journeyperson's rate
Supplemental Benefit Rate Per Hour: $17.75

Cement & Concrete Worker (Second 1333 hours)

Effective Period: 7/1/2017 - 6/30/2018
Wage Rate Per Hour: 65% of Journeyperson's rate
Supplemental Benefit Rate Per Hour: $23.03

Cement & Concrete Worker (Last 1334 hours)

Effective Period: 7/1/2017 - 6/30/2018
Wage Rate Per Hour: 80% of Journeyperson's rate
Supplemental Benefit Rate Per Hour: $24.30

Cement & Concrete Worker (Hired after 2/6/2016 - First 1334 hours)

Effective Period: 7/1/2017 - 6/30/2018
Wage Rate Per Hour: $16.96
Supplemental Benefit Rate Per Hour: $11.80

Cement & Concrete Worker (Hired after 2/6/2016 - Second 1334 hours)

Effective Period: 7/1/2017 - 6/30/2018
Wage Rate Per Hour: $22.08
Supplemental Benefit Rate Per Hour: $16.49

Cement & Concrete Worker (Hired after 2/6/2016 - Last 1334 hours)

Effective Period: 7/1/2017 - 6/30/2018
Wage Rate Per Hour: $27.20
Supplemental Benefit Rate Per Hour: $17.33

(Cement Concrete Workers District Council)

DERRICKPERSON & RIGGER (STONE)
(Ratio of Apprentice to Journeyperson: 1 to 1, 1 to 4)

Derrickperson & Rigger (stone) - First Year

Effective Period: 7/1/2017 - 6/30/2018
Wage Rate Per Hour: 50% of Journeyperson's rate
Supplemental Benefit Rate Per Hour: 50% of Journeyperson's rate

Derrickperson & Rigger (stone) - Second Year: 1st Six Months

Effective Period: 7/1/2017 - 6/30/2018
Wage Rate Per Hour: 70% of Journeyperson's rate

Supplemental Benefit Rate Per Hour: 75% of Journeyperson's rate

Derrickperson & Rigger (stone) - Second Year: 2nd Six Months

Effective Period: 7/1/2017 - 6/30/2018
Wage Rate Per Hour: 80% of Journeyperson's rate
Supplemental Benefit Rate Per Hour: 75% of Journeyperson's rate

Derrickperson & Rigger (stone) - Third Year

Effective Period: 7/1/2017 - 6/30/2018
Wage Rate Per Hour: 90% of Journeyperson's rate
Supplemental Benefit Rate Per Hour: 75% of Journeyperson's rate

(Local #197)

DOCKBUILDER/PILE DRIVER
(Ratio of Apprentice to Journeyperson: 1 to 1, 1 to 6)

Dockbuilder/Pile Driver (First Year)

Effective Period: 7/1/2017 - 6/30/2018
Wage Rate Per Hour: 40% of Journeyperson's rate
Supplemental Benefit Rate Per Hour: $33.03

Dockbuilder/Pile Driver (Second Year)

Effective Period: 7/1/2017 - 6/30/2018
Wage Rate Per Hour: 50% of Journeyperson's rate
Supplemental Benefit Rate Per Hour: $33.03

Dockbuilder/Pile Driver (Third Year)

Effective Period: 7/1/2017 - 6/30/2018
Wage Rate Per Hour: 65% of Journeyperson's rate
Supplemental Benefit Rate Per Hour: $33.03

Dockbuilder/Pile Driver (Fourth Year)

Effective Period: 7/1/2017 - 6/30/2018
Wage Rate Per Hour: 80% of Journeyperson's rate
Supplemental Benefit Rate Per Hour: $33.03

(Carpenters District Council)

ELECTRICIAN
(Ratio of Apprentice to Journeyperson: 1 to 1, 1 to 3)

Electrician (First Term: 0-6 Months)

Effective Period: 7/1/2017 - 5/9/2018
Wage Rate per Hour: $14.00
Supplemental Benefit Rate per Hour: $12.37
Overtime Supplemental Rate Per Hour: $13.29

Effective Period: 5/10/2018 - 6/30/2018
Wage Rate per Hour: $14.50
Supplemental Benefit Rate per Hour: $12.63
Overtime Supplemental Rate Per Hour: $13.58

Electrician (First Term: 7-12 Months)

Effective Period: 7/1/2017 - 5/9/2018
Wage Rate per Hour: $15.00
Supplemental Benefit Rate per Hour: $12.88
Overtime Supplemental Rate Per Hour: $13.87

Effective Period: 5/10/2018 - 6/30/2018
Wage Rate per Hour: $15.50
Supplemental Benefit Rate per Hour: $13.14
Overtime Supplemental Rate Per Hour: $14.16

Electrician (Second Term: 0-6 Months)

Effective Period: 7/1/2017 - 5/9/2018
Wage Rate per Hour: $16.00
Supplemental Benefit Rate per Hour: $13.39
Overtime Supplemental Rate Per Hour: $14.44

Effective Period: 5/10/2018 - 6/30/2018
Wage Rate per Hour: $16.50
Supplemental Benefit Rate per Hour: $13.64
Overtime Supplemental Rate Per Hour: $14.73

Electrician (Second Term: 7-12 Months)

Effective Period: 7/1/2017 - 5/9/2018
Wage Rate per Hour: $17.00
Supplemental Benefit Rate per Hour: $13.90

Overtime Supplemental Rate Per Hour: $15.02

Effective Period: 5/10/2018 - 6/30/2018
Wage Rate per Hour: $17.50
Supplemental Benefit Rate per Hour: $14.15
Overtime Supplemental Rate Per Hour: $15.31

Electrician (Third Term: 0-6 Months)

Effective Period: 7/1/2017 - 5/9/2018
Wage Rate per Hour: $18.00
Supplemental Benefit Rate per Hour: $14.41
Overtime Supplemental Rate Per Hour: $15.59

Effective Period: 5/10/2018 - 6/30/2018
Wage Rate per Hour: $18.50
Supplemental Benefit Rate per Hour: $14.66
Overtime Supplemental Rate Per Hour: $15.88

Electrician (Third Term: 7-12 Months)

Effective Period: 7/1/2017 - 5/9/2018
Wage Rate per Hour: $19.00
Supplemental Benefit Rate per Hour: $14.92
Overtime Supplemental Rate Per Hour: $16.17

Effective Period: 5/10/2018 - 6/30/2018
Wage Rate per Hour: $19.50
Supplemental Benefit Rate per Hour: $15.17
Overtime Supplemental Rate Per Hour: $16.45

Electrician (Fourth Term: 0-6 Months)

Effective Period: 7/1/2017 - 5/9/2018
Wage Rate per Hour: $20.00
Supplemental Benefit Rate per Hour: $15.43
Overtime Supplemental Rate Per Hour: $16.74

Effective Period: 5/10/2018 - 6/30/2018
Wage Rate per Hour: $20.50
Supplemental Benefit Rate per Hour: $15.68
Overtime Supplemental Rate Per Hour: $17.03

Electrician (Fourth Term: 7-12 Months)

Effective Period: 7/1/2017 - 5/9/2018
Wage Rate per Hour: $22.00
Supplemental Benefit Rate per Hour: $16.44
Overtime Supplemental Rate Per Hour: $17.89

Effective Period: 5/10/2018 - 6/30/2018
Wage Rate per Hour: $22.50
Supplemental Benefit Rate per Hour: $16.70
Overtime Supplemental Rate Per Hour: $18.18

Electrician (Fifth Term: 0-12 Months)

Effective Period: 7/1/2017 - 5/9/2018
Wage Rate per Hour: $24.00
Supplemental Benefit Rate per Hour: $19.80
Overtime Supplemental Rate Per Hour: $21.30

Effective Period: 5/10/2018 - 6/30/2018
Wage Rate per Hour: $24.50
Supplemental Benefit Rate per Hour: $20.30
Overtime Supplemental Rate Per Hour: $21.84

Electrician (Fifth Term: 13-18 Months)

Effective Period: 7/1/2017 - 5/9/2018
Wage Rate per Hour: $28.50
Supplemental Benefit Rate per Hour: $22.10
Overtime Supplemental Rate Per Hour: $23.89

Effective Period: 5/10/2018 - 6/30/2018
Wage Rate per Hour: $29.00
Supplemental Benefit Rate per Hour: $22.65
Overtime Supplemental Rate Per Hour: $24.47

Overtime Description
Overtime Wage paid at time and one half the regular rate

(Local #3)

ELEVATOR CONSTRUCTOR
(Ratio of Apprentice to Journeyperson: 1 to 1, 1 to 2)

Elevator (Constructor) - First Year

Effective Period: 7/1/2017 - 3/16/2018
Wage Rate Per Hour: 50% of Journeyperson's rate
Supplemental Rate Per Hour: $29.88

Effective Period: 3/17/2018 - 6/30/2018

Wage Rate Per Hour: 50% of Journeyperson's rate
Supplemental Rate Per Hour: $31.35

Elevator (Constructor) - Second Year

Effective Period: 7/1/2017 - 3/16/2018
Wage Rate Per Hour: 55% of Journeyperson's rate
Supplemental Rate Per Hour: $30.31

Effective Period: 3/17/2018 - 6/30/2018
Wage Rate Per Hour: 55% of Journeyperson's rate
Supplemental Rate Per Hour: $31.80

Elevator (Constructor) - Third Year

Effective Period: 7/1/2017 - 3/16/2018
Wage Rate Per Hour: 65% of Journeyperson's rate
Supplemental Rate Per Hour: $31.19

Effective Period: 3/17/2018 - 6/30/2018
Wage Rate Per Hour: 65% of Journeyperson's rate
Supplemental Rate Per Hour: $32.70

Elevator (Constructor) - Fourth Year

Effective Period: 7/1/2017 - 3/16/2018
Wage Rate Per Hour: 75% of Journeyperson's rate
Supplemental Rate Per Hour: $32.07

Effective Period: 3/17/2018 - 6/30/2018
Wage Rate Per Hour: 75% of Journeyperson's rate
Supplemental Rate Per Hour: $33.60

(Local #1)

ELEVATOR REPAIR & MAINTENANCE
(Ratio of Apprentice to Journeyperson: 1 to 1, 1 to 2)

Elevator Service/Modernization Mechanic (First Year)

Effective Period: 7/1/2017 - 3/16/2018
Wage Rate Per Hour: 50% of Journeyperson's rate
Supplemental Benefit Per Hour: $29.80

Effective Period: 3/17/2018 - 6/30/2018
Wage Rate Per Hour: 50% of Journeyperson's rate

Supplemental Benefit Per Hour: $31.28

Elevator Service/Modernization Mechanic (Second Year)

Effective Period: 7/1/2017 - 3/16/2018
Wage Rate Per Hour: 55% of Journeyperson's rate
Supplemental Benefit Per Hour: $30.23

Effective Period: 3/17/2018 - 6/30/2018
Wage Rate Per Hour: 55% of Journeyperson's rate
Supplemental Benefit Per Hour: $31.72

Elevator Service/Modernization Mechanic (Third Year)

Effective Period: 7/1/2017 - 3/16/2018
Wage Rate Per Hour: 65% of Journeyperson's rate
Supplemental Benefit Per Hour: $31.09

Effective Period: 3/17/2018 - 6/30/2018
Wage Rate Per Hour: 65% of Journeyperson's rate
Supplemental Benefit Per Hour: $32.60

Elevator Service/Modernization Mechanic (Fourth Year)

Effective Period: 7/1/2017 - 3/16/2018
Wage Rate Per Hour: 75% of Journeyperson's rate
Supplemental Benefit Per Hour: $31.95

Effective Period: 3/17/2018 - 6/30/2018
Wage Rate Per Hour: 75% of Journeyperson's rate
Supplemental Benefit Per Hour: $33.49

(Local #1)

ENGINEER
(Ratio of Apprentice to Journeyperson: 1 to 1, 1 to 5)

Engineer - First Year

Effective Period: 7/1/2017 - 6/30/2018
Wage Rate per Hour: $24.77
Supplemental Benefit Rate per Hour: $24.62

Engineer - Second Year

Effective Period: 7/1/2017 - 6/30/2018
Wage Rate per Hour: $30.97
Supplemental Benefit Rate per Hour: $24.62

Engineer - Third Year

Effective Period: 7/1/2017 - 6/30/2018
Wage Rate per Hour: $34.06
Supplemental Benefit Rate per Hour: $24.62

Engineer - Fourth Year

Effective Period: 7/1/2017 - 6/30/2018
Wage Rate per Hour: $37.16
Supplemental Benefit Rate per Hour: $24.62

(Local #15)

ENGINEER - OPERATING
(Ratio of Apprentice to Journeyperson: 1 to 1, 1 to 5)

Operating Engineer - First Year

Effective Period: 7/1/2017 - 6/30/2018
Wage Rate Per Hour 40% of Journeyperson's Rate
Supplemental Benefit Per Hour: $20.85

Operating Engineer - Second Year

Effective Period: 7/1/2017 - 6/30/2018
Wage Rate Per Hour: 50% of Journeyperson's Rate
Supplemental Benefit Per Hour: $20.85

Operating Engineer - Third Year

Effective Period: 7/1/2017 - 6/30/2018
Wage Rate Per Hour: 60% of Journeyperson's Rate
Supplemental Benefit Per Hour: $20.85

(Local #14)

FLOOR COVERER
(Ratio of Apprentice to Journeyperson: 1 to 1, 1 to 4)

Floor Coverer (First Year)

Effective Period: 7/1/2017 - 6/30/2018
Wage Rate Per Hour: 40% of Journeyperson's rate
Supplemental Rate Per Hour: $31.14

Floor Coverer (Second Year)

Effective Period: 7/1/2017 - 6/30/2018
Wage Rate Per Hour: 50% of Journeyperson's rate
Supplemental Rate Per Hour: $31.14

Floor Coverer (Third Year)

Effective Period: 7/1/2017 - 6/30/2018
Wage Rate Per Hour: 65% of Journeyperson's rate
Supplemental Rate Per Hour: $31.14

Floor Coverer (Fourth Year)

Effective Period: 7/1/2017 - 6/30/2018
Wage Rate Per Hour: 80% of Journeyperson's rate
Supplemental Rate Per Hour: $31.14

(Carpenters District Council)

GLAZIER
(Ratio of Apprentice to Journeyperson: 1 to 1, 1 to 3)

Glazier (First Year)

Effective Period: 7/1/2017 - 6/30/2018
Wage Rate Per Hour: 40% of Journeyperson's rate
Supplemental Rate Per Hour: $15.26

Glazier (Second Year)

Effective Period: 7/1/2017 - 6/30/2018
Wage Rate Per Hour: 50% of Journeyperson's rate

Supplemental Rate Per Hour: $25.36

Glazier (Third Year)

Effective Period: 7/1/2017 - 6/30/2018
Wage Rate Per Hour: 60% of Journeyperson's rate
Supplemental Rate Per Hour: $28.62

Glazier (Fourth Year)

Effective Period: 7/1/2017 - 6/30/2018
Wage Rate Per Hour: 80% of Journeyperson's rate
Supplemental Rate Per Hour: $34.67

(Local #1281)

HEAT & FROST INSULATOR
(Ratio of Apprentice to Journeyperson: 1 to 1, 1 to 3)

Heat & Frost Insulator (First Year)

Effective Period: 7/1/2017 - 6/30/2018
Wage and Supplemental Rate Per Hour: 40% of Journeyperson's rate

Heat & Frost Insulator (Second Year)

Effective Period: 7/1/2017 - 6/30/2018
Wage and Supplemental Rate Per Hour: 60% of Journeyperson's rate

Heat & Frost Insulator (Third Year)

Effective Period: 7/1/2017 - 6/30/2018
Wage and Supplemental Rate Per Hour: 70% of Journeyperson's rate

Heat & Frost Insulator (Fourth Year)

Effective Period: 7/1/2017 - 6/30/2018
Wage and Supplemental Rate Per Hour: 80% of Journeyperson's rate

(Local #12)

HOUSE WRECKER
(TOTAL DEMOLITION)
(Ratio of Apprentice to Journeyperson: 1 to 1, 1 to 3)

House Wrecker - First Year

Effective Period: 7/1/2017 - 6/30/2018
Wage Rate per Hour: $21.17
Supplemental Benefit Rate per Hour: $18.54

House Wrecker - Second Year

Effective Period: 7/1/2017 - 6/30/2018
Wage Rate per Hour: $22.32
Supplemental Benefit Rate per Hour: $18.54

House Wrecker - Third Year

Effective Period: 7/1/2017 - 6/30/2018
Wage Rate per Hour: $23.97
Supplemental Benefit Rate per Hour: $18.54

House Wrecker - Fourth Year

Effective Period: 7/1/2017 - 6/30/2018
Wage Rate per Hour: $26.53
Supplemental Benefit Rate per Hour: $18.54

(Mason Tenders District Council)

IRON WORKER - ORNAMENTAL
(Ratio of Apprentice to Journeyperson: 1 to 1, 1 to 4)

Iron Worker (Ornamental) - 1st Ten Months

Effective Period: 7/1/2017 - 6/30/2018
Wage Rate Per Hour: 50% of Journeyperson's rate
Supplemental Rate Per Hour: $39.40

Iron Worker (Ornamental) - 11 -16 Months

Effective Period: 7/1/2017 - 6/30/2018
Wage Rate Per Hour: 55% of Journeyperson's rate
Supplemental Rate Per Hour: $40.62

Iron Worker (Ornamental) - 17 - 22 Months

Effective Period: 7/1/2017 - 6/30/2018
Wage Rate Per Hour: 60% of Journeyperson's rate
Supplemental Rate Per Hour: $41.83

Iron Worker (Ornamental) - 23 - 28 Months

Effective Period: 7/1/2017 - 6/30/2018
Wage Rate Per Hour: 70% of Journeyperson's rate
Supplemental Rate Per Hour: $44.27

Iron Worker (Ornamental) - 29 - 36 Months

Effective Period: 7/1/2017 - 6/30/2018
Wage Rate Per Hour: 80% of Journeyperson's rate
Supplemental Rate Per Hour: $46.70

(Local #580)

IRON WORKER - STRUCTURAL
(Ratio of Apprentice to Journeyperson: 1 to 1, 1 to 6)

Iron Worker (Structural) - 1st Six Months

Effective Period: 7/1/2017 - 6/30/2018
Wage Rate per Hour: $26.12
Supplemental Benefit Rate per Hour: $50.22

Iron Worker (Structural) - 7- 18 Months

Effective Period: 7/1/2017 - 6/30/2018
Wage Rate per Hour: $26.72
Supplemental Benefit Rate per Hour: $50.22

Iron Worker (Structural) - 19 - 36 months

Effective Period: 7/1/2017 - 6/30/2018
Wage Rate per Hour: $27.32

Supplemental Benefit Rate per Hour: $50.22

(Local #40 and #361)

LABORER (FOUNDATION, CONCRETE, EXCAVATING, STREET PIPE LAYER & COMMON)
(Ratio Apprentice to Journeyperson: 1 to 1, 1 to 3)

Laborer (Foundation, Concrete, Excavating, Street Pipe Layer & Common) - First 1000 hours

Effective Period: 7/1/2017 - 6/30/2018
Wage Rate Per Hour: 50% of Journeyperson's rate
Supplemental Rate Per Hour: $40.63

Laborer (Foundation, Concrete, Excavating, Street Pipe Layer & Common) - Second 1000 hours

Effective Period: 7/1/2017 - 6/30/2018
Wage Rate Per Hour: 60% of Journeyperson's rate
Supplemental Rate Per Hour: $40.63

Laborer (Foundation, Concrete, Excavating, Street Pipe Layer & Common) - Third 1000 hours

Effective Period: 7/1/2017 - 6/30/2018
Wage Rate Per Hour: 75% of Journeyperson's rate
Supplemental Rate Per Hour: $40.63

Laborer (Foundation, Concrete, Excavating, Street Pipe Layer & Common) - Fourth 1000 hours

Effective Period: 7/1/2017 - 6/30/2018
Wage Rate Per Hour: 90% of Journeyperson's rate
Supplemental Rate Per Hour: $40.63

(Local #731)

MARBLE MECHANICS
(Ratio of Apprentice to Journeyperson: 1 to 1, 1 to 4)

Cutters & Setters - First 750 Hours

Effective Period: 7/1/2017 - 6/30/2018
Wage and Supplemental Rate Per Hour: 50% of Journeyperson's rate

NO BENEFITS PAID DURING THE FIRST TWO MONTHS (PROBATIONARY PERIOD)

Cutters & Setters - Second 750 Hours

Effective Period: 7/1/2017 - 6/30/2018
Wage and Supplemental Rate Per Hour: 55% of Journeyperson's rate

Cutters & Setters - Third 750 Hours

Effective Period: 7/1/2017 - 6/30/2018
Wage and Supplemental Rate Per Hour: 65% of Journeyperson's rate

Cutters & Setters - Fourth 750 Hours

Effective Period: 7/1/2017 - 6/30/2018
Wage and Supplemental Rate Per Hour: 75% of Journeyperson's rate

Cutters & Setters - Fifth 750 Hours

Effective Period: 7/1/2017 - 6/30/2018
Wage and Supplemental Rate Per Hour: 85% of Journeyperson's rate

Cutters & Setters - Sixth 750 Hours

Effective Period: 7/1/2017 - 6/30/2018
Wage and Supplemental Rate Per Hour: 95% of Journeyperson's rate

Polishers & Finishers - First 750 Hours

Effective Period: 7/1/2017 - 6/30/2018
Wage and Supplemental Rate Per Hour: 50% of Journeyperson's rate

NO BENEFITS PAID DURING THE FIRST TWO MONTHS (PROBATIONARY PERIOD)

Polishers & Finishers - Second 750 Hours

Effective Period: 7/1/2017 - 6/30/2018
Wage and Supplemental Rate Per Hour: 60% of Journeyperson's rate

Polishers & Finishers - Third 750 Hours

Effective Period: 7/1/2017 - 6/30/2018
Wage and Supplemental Rate Per Hour: 75% of Journeyperson's rate

Polishers & Finishers - Fourth 750 Hours

Effective Period: 7/1/2017 - 6/30/2018
Wage and Supplemental Rate Per Hour: 90% of Journeyperson's rate

(Local #7)

MASON TENDER
(Ratio of Apprentice to Journeyperson: 1 to 1, 1 to 3)

Mason Tender - First Year

Effective Period: 7/1/2017 - 6/30/2018
Wage Rate per Hour: $21.39
Supplemental Benefit Rate per Hour: $19.65

Mason Tender - Second Year

Effective Period: 7/1/2017 - 6/30/2018
Wage Rate per Hour: $22.54
Supplemental Benefit Rate per Hour: $19.65

Mason Tender - Third Year

Effective Period: 7/1/2017 - 6/30/2018
Wage Rate per Hour: $24.29
Supplemental Benefit Rate per Hour: $19.70

Mason Tender - Fourth Year

Effective Period: 7/1/2017 - 6/30/2018
Wage Rate per Hour: $26.95
Supplemental Benefit Rate per Hour: $19.70

(Local #79)

METALLIC LATHER
(Ratio of Apprentice to Journeyperson: 1 to 1, 1 to 3)

Metallic Lather (First Year)

Effective Period: 7/1/2017 - 6/30/2018
Wage Rate per Hour: $28.38
Supplemental Benefit Rate per Hour: $10.96

Metallic Lather (Second Year)

Effective Period: 7/1/2017 - 6/30/2018
Wage Rate per Hour: $32.38
Supplemental Benefit Rate per Hour: $12.96

Metallic Lather (Third Year)

Effective Period: 7/1/2017 - 6/30/2018
Wage Rate per Hour: $35.38
Supplemental Benefit Rate per Hour: $17.12

Metallic Lather (Fourth Year)

Effective Period: 7/1/2017 - 6/30/2018
Wage Rate per Hour: $37.38
Supplemental Benefit Rate per Hour: $17.92

(Local #46)

MILLWRIGHT
(Ratio of Apprentice to Journeyperson: 1 to 1, 1 to 4)

Millwright (First Year)

Effective Period: 7/1/2017 - 6/30/2018
Wage Rate per Hour: $28.33
Supplemental Benefit Rate per Hour: $34.28

Millwright (Second Year)

Effective Period: 7/1/2017 - 6/30/2018
Wage Rate per Hour: $33.48
Supplemental Benefit Rate per Hour: $37.88

Millwright (Third Year)

Effective Period: 7/1/2017 - 6/30/2018
Wage Rate per Hour: $38.63
Supplemental Benefit Rate per Hour: $42.13

Millwright (Fourth Year)

Effective Period: 7/1/2017 - 6/30/2018
Wage Rate per Hour: $48.93
Supplemental Benefit Rate per Hour: $48.69

(Local #740)

PAVER AND ROADBUILDER
(Ratio of Apprentice to Journeyperson: 1 to 1, 1 to 3)

Paver and Roadbuilder - First Year (Minimum 1000 hours)

Effective Period: 7/1/2017 - 6/30/2018
Wage Rate per Hour: $27.86
Supplemental Benefit Rate per Hour: $19.25

Paver and Roadbuilder - Second Year (Minimum 1000 hours)

Effective Period: 7/1/2017 - 6/30/2018
Wage Rate per Hour: $29.50
Supplemental Benefit Rate per Hour: $19.25

(Local #1010)

PAINTER
(Ratio of Apprentice to Journeyperson: 1 to 1, 1 to 3)

Painter - Brush & Roller - First Year

Effective Period: 7/1/2017 - 6/30/2018
Wage Rate per Hour: $17.00
Supplemental Benefit Rate per Hour: $13.42

Painter - Brush & Roller - Second Year

Effective Period: 7/1/2017 - 6/30/2018
Wage Rate per Hour: $21.25
Supplemental Benefit Rate per Hour: $17.43

Painter - Brush & Roller - Third Year

Effective Period: 7/1/2017 - 6/30/2018
Wage Rate per Hour: $25.50
Supplemental Benefit Rate per Hour: $20.50

Painter - Brush & Roller - Fourth Year

Effective Period: 7/1/2017 - 6/30/2018
Wage Rate per Hour: $34.00
Supplemental Benefit Rate per Hour: $26.20

(District Council of Painters)

PAINTER - METAL POLISHER
(Ratio of Apprentice to Journeyperson: 1 to 1, 1 to 3)

Metal Polisher (First Year)

Effective Period: 7/1/2017 - 6/30/2018
Wage Rate per Hour: $11.75
Supplemental Benefit Rate per Hour: $5.13

Metal Polisher (Second Year)

Effective Period: 7/1/2017 - 6/30/2018
Wage Rate per Hour: $13.00
Supplemental Benefit Rate per Hour: $5.13

Metal Polisher (Third Year)

Effective Period: 7/1/2017 - 6/30/2018
Wage Rate per Hour: $15.75
Supplemental Benefit Rate per Hour: $5.13

(Local 8A-28)

PAINTER - STRUCTURAL STEEL
(Ratio of Apprentice to Journeyperson: 1 to 1, 1 to 3)

Painters - Structural Steel (First Year)

Effective Period: 7/1/2017 - 6/30/2018
Wage and Supplemental Rate Per Hour: 40% of Journeyperson's rate

Painters - Structural Steel (Second Year)

Effective Period: 7/1/2017 - 6/30/2018
Wage and Supplemental Rate Per Hour: 60% of Journeyperson's rate

Painters - Structural Steel (Third Year)

Effective Period: 7/1/2017 - 6/30/2018
Wage and Supplemental Rate Per Hour: 80% of Journeyperson's rate

(Local #806)

PLASTERER
(Ratio of Apprentice to Journeyperson: 1 to 1, 1 to 3)

Plasterer - First Year: 1st Six Months

Effective Period: 7/1/2017 - 6/30/2018
Wage Rate Per Hour: 40% of Journeyperson's rate
Supplemental Rate Per Hour: $13.59

Plasterer - First Year: 2nd Six Months

Effective Period: 7/1/2017 - 6/30/2018
Wage Rate Per Hour: 45% of Journeyperson's rate
Supplemental Rate Per Hour: $14.07

Plasterer - Second Year: 1st Six Months

Effective Period: 7/1/2017 - 6/30/2018
Wage Rate Per Hour: 55% of Journeyperson's rate
Supplemental Rate Per Hour: $16.04

Plasterer - Second Year: 2nd Six Months

Effective Period: 7/1/2017 - 6/30/2018
Wage Rate Per Hour: 60% of Journeyperson's rate
Supplemental Rate Per Hour: $17.12

Plasterer - Third Year: 1st Six Months

Effective Period: 7/1/2017 - 6/30/2018
Wage Rate Per Hour: 70% of Journeyperson's rate
Supplemental Rate Per Hour: $19.29

Plasterer - Third Year: 2nd Six Months

Effective Period: 7/1/2017 - 6/30/2018
Wage Rate Per Hour: 75% of Journeyperson's rate
Supplemental Rate Per Hour: $20.37

(Local #530)

PLASTERER - TENDER
(Ratio of Apprentice to Journeyperson: 1 to 1, 1 to 3)

Plasterer Tender - First Year

Effective Period: 7/1/2017 - 6/30/2018
Wage Rate per Hour: $21.39
Supplemental Benefit Rate per Hour: $19.65

Plasterer Tender - Second Year

Effective Period: 7/1/2017 - 6/30/2018
Wage Rate per Hour: $22.54

Supplemental Benefit Rate per Hour: $19.65

Plasterer Tender - Third Year

Effective Period: 7/1/2017 - 6/30/2018
Wage Rate per Hour: $24.29
Supplemental Benefit Rate per Hour: $19.70

Plasterer Tender - Fourth Year

Effective Period: 7/1/2017 - 6/30/2018
Wage Rate per Hour: $26.95
Supplemental Benefit Rate per Hour: $19.70

(Local #79)

PLUMBER
(Ratio of Apprentice to Journeyperson: 1 to 1, 1 to 3)

Plumber - First Year: 1st Six Months

Effective Period: 7/1/2017 - 6/30/2018
Wage Rate per Hour: $16.28
Supplemental Benefit Rate per Hour: $5.43

Plumber - First Year: 2nd Six Months

Effective Period: 7/1/2017 - 6/30/2018
Wage Rate per Hour: $19.28
Supplemental Benefit Rate per Hour: $6.43

Plumber - Second Year

Effective Period: 7/1/2017 - 6/30/2018
Wage Rate per Hour: $26.35
Supplemental Benefit Rate per Hour: $17.10

Plumber - Third Year

Effective Period: 7/1/2017 - 6/30/2018
Wage Rate per Hour: $28.45
Supplemental Benefit Rate per Hour: $17.10

Plumber - Fourth Year

Effective Period: 7/1/2017 - 6/30/2018
Wage Rate per Hour: $31.30
Supplemental Benefit Rate per Hour: $17.10

Plumber - Fifth Year: 1st Six Months

Effective Period: 7/1/2017 - 6/30/2018
Wage Rate per Hour: $32.70
Supplemental Benefit Rate per Hour: $17.10

Plumber - Fifth Year: 2nd Six Months

Effective Period: 7/1/2017 - 6/30/2018
Wage Rate per Hour: $44.77
Supplemental Benefit Rate per Hour: $17.10

(Plumbers Local #1)

POINTER, WATERPROOFER, CAULKER, SANDBLASTER, STEAMBLASTER
(Exterior Building Renovation)
(Ratio of Apprentice to Journeyperson: 1 to 1, 1 to 4)

Pointer, Waterproofer, Caulker, Sandblaster, Steamblaster - First Year

Effective Period: 7/1/2017 - 6/30/2018
Wage Rate per Hour: $25.89
Supplemental Benefit Rate per Hour: $13.64

Pointer, Waterproofer, Caulker, Sandblaster, Steamblaster - Second Year

Effective Period: 7/1/2017 - 6/30/2018
Wage Rate per Hour: $28.97
Supplemental Benefit Rate per Hour: $18.15

Pointer, Waterproofer, Caulker, Sandblaster, Steamblaster - Third Year

Effective Period: 7/1/2017 - 6/30/2018
Wage Rate per Hour: $34.12
Supplemental Benefit Rate per Hour: $20.90

Pointer, Waterproofer, Caulker, Sandblaster, Steamblaster - Fourth Year

Effective Period: 7/1/2017 - 6/30/2018
Wage Rate per Hour: $41.33
Supplemental Benefit Rate per Hour: $21.60

(Bricklayer District Council)

ROOFER
(Ratio of Apprentice to Journeyperson: 1 to 1, 1 to 2)

Roofer - First Year

Effective Period: 7/1/2017 - 6/30/2018
Wage and Supplemental Rate Per Hour: 35% of Journeyperson's Rate

Roofer - Second Year

Effective Period: 7/1/2017 - 6/30/2018
Wage and Supplemental Rate Per Hour: 50% of Journeyperson's Rate

Roofer - Third Year

Effective Period: 7/1/2017 - 6/30/2018
Wage and Supplemental Rate Per Hour: 60% of Journeyperson's Rate

Roofer - Fourth Year

Effective Period: 7/1/2017 - 6/30/2018
Wage and Supplemental Rate Per Hour: 75% of Journeyperson's Rate

(Local #8)

SHEET METAL WORKER
(Ratio of Apprentice to Journeyperson: 1 to 1, 1 to 3)

Sheet Metal Worker (0-6 Months)

Effective Period: 7/1/2017 - 6/30/2018
Wage Rate Per Hour: 25% of Journeyperson's rate
Supplemental Rate Per Hour: $6.35

Sheet Metal Worker (7-18 Months)

Effective Period: 7/1/2017 - 6/30/2018
Wage Rate Per Hour: 35% of Journeyperson's rate
Supplemental Rate Per Hour: $17.12

Sheet Metal Worker (19-30 Months)

Effective Period: 7/1/2017 - 6/30/2018
Wage Rate Per Hour: 45% of Journeyperson's rate
Supplemental Rate Per Hour: $23.54

Sheet Metal Worker (31-36 Months)

Effective Period: 7/1/2017 - 6/30/2018
Wage Rate Per Hour: 55% of Journeyperson's rate
Supplemental Rate Per Hour: $27.70

Sheet Metal Worker (37-42 Months)

Effective Period: 7/1/2017 - 6/30/2018
Wage Rate Per Hour: 60% of Journeyperson's rate
Supplemental Rate Per Hour: $29.11

Sheet Metal Worker (43-48 Months)

Effective Period: 7/1/2017 - 6/30/2018
Wage Rate Per Hour: 70% of Journeyperson's rate
Supplemental Rate Per Hour: $33.96

Sheet Metal Worker (49-54 Months)

Effective Period: 7/1/2017 - 6/30/2018
Wage Rate Per Hour: 75% of Journeyperson's rate
Supplemental Rate Per Hour: $36.07

Sheet Metal Worker (55-60 Months)

Effective Period: 7/1/2017 - 6/30/2018
Wage Rate Per Hour: 80% of Journeyperson's rate
Supplemental Rate Per Hour: $38.15

(Local #28)

SIGN ERECTOR
(Ratio of Apprentice to Journeyperson: 1 to 1, 1 to 4)

Sign Erector - First Year: 1st Six Months

Effective Period: 7/1/2017 - 6/30/2018
Wage Rate Per Hour: 35% of Journeyperson's rate
Supplemental Rate Per Hour: $14.72

Sign Erector - First Year: 2nd Six Months

Effective Period: 7/1/2017 - 6/30/2018
Wage Rate Per Hour: 40% of Journeyperson's rate
Supplemental Rate Per Hour: $16.71

Sign Erector - Second Year: 1st Six Months

Effective Period: 7/1/2017 - 6/30/2018
Wage Rate Per Hour: 45% of Journeyperson's rate
Supplemental Rate Per Hour: $18.68

Sign Erector - Second Year: 2nd Six Months

Effective Period: 7/1/2017 - 6/30/2018
Wage Rate Per Hour: 50% of Journeyperson's rate
Supplemental Rate Per Hour: $20.68

Sign Erector - Third Year: 1st Six Months

Effective Period: 7/1/2017 - 6/30/2018
Wage Rate Per Hour: 55% of Journeyperson's rate
Supplemental Rate Per Hour: $27.72

Sign Erector - Third Year: 2nd Six Months

Effective Period: 7/1/2017 - 6/30/2018
Wage Rate Per Hour: 60% of Journeyperson's rate
Supplemental Rate Per Hour: $30.57

Sign Erector - Fourth Year: 1st Six Months

Effective Period: 7/1/2017 - 6/30/2018
Wage Rate Per Hour: 65% of Journeyperson's rate
Supplemental Rate Per Hour: $33.31

Sign Erector - Fourth Year: 2nd Six Months

Effective Period: 7/1/2017 - 6/30/2018
Wage Rate Per Hour: 70% of Journeyperson's rate
Supplemental Rate Per Hour: $35.83

Sign Erector - Fifth Year

Effective Period: 7/1/2017 - 6/30/2018
Wage Rate Per Hour: 75% of Journeyperson's rate
Supplemental Rate Per Hour: $38.32

Sign Erector - Sixth Year

Effective Period: 7/1/2017 - 6/30/2018
Wage Rate Per Hour: 80% of Journeyperson's rate
Supplemental Rate Per Hour: $40.81

(Local #137)

STEAMFITTER
(Ratio of Apprentice to Journeyperson: 1 to 1, 1 to 3)

Steamfitter - First Year

Effective Period: 7/1/2017 - 6/30/2018
Wage Rate and Supplemental Per Hour: 40% of Journeyperson's rate

Steamfitter - Second Year

Effective Period: 7/1/2017 - 6/30/2018
Wage Rate and Supplemental Rate Per Hour: 50% of Journeyperson's rate.

Steamfitter - Third Year

Effective Period: 7/1/2017 - 6/30/2018
Wage Rate and Supplemental Rate per Hour: 65% of Journeyperson's rate.

Steamfitter - Fourth Year

Effective Period: 7/1/2017 - 6/30/2018
Wage Rate and Supplemental Rate Per Hour: 80% of Journeyperson's rate.

Steamfitter - Fifth Year

Effective Period: 7/1/2017 - 6/30/2018
Wage Rate and Supplemental Rate Per Hour: 85% of Journeyperson's rate.

(Local #638)

STONE MASON - SETTER
(Ratio Apprentice of Journeyperson: 1 to 1, 1 to 2)

Stone Mason - Setters - First 750 Hours

Effective Period: 7/1/2017 - 6/30/2018
Wage and Supplemental Rate Per Hour: 50% of Journeyperson's rate

Stone Mason - Setters - Second 750 Hours

Effective Period: 7/1/2017 - 6/30/2018
Wage Rate Per Hour: 60% of Journeyperson's rate
Supplemental Rate Per Hour: 50% of Journeyperson's rate

Stone Mason - Setters - Third 750 Hours

Effective Period: 7/1/2017 - 6/30/2018
Wage Rate Per Hour: 70% of Journeyperson's rate
Supplemental Rate Per Hour: 50% of Journeyperson's rate

Stone Mason - Setters - Fourth 750 Hours

Effective Period: 7/1/2017 - 6/30/2018
Wage Rate Per Hour: 80% of Journeyperson's rate
Supplemental Rate Per Hour: 50% of Journeyperson's rate

Stone Mason - Setters - Fifth 750 Hours

Effective Period: 7/1/2017 - 6/30/2018
Wage Rate Per Hour: 90% of Journeyperson's rate
Supplemental Rate Per Hour: 50% of Journeyperson's rate

Stone Mason - Setters - Sixth 750 Hours

Effective Period: 7/1/2017 - 6/30/2018
Wage Rate Per Hour: 100% of Journeyperson's rate
Supplemental Rate Per Hour: 50% of Journeyperson's rate

(Bricklayers District Council)

TAPER
(Ratio of Apprentice to Journeyperson: 1 to 1, 1 to 4)

Drywall Taper - First Year

Effective Period: 7/1/2017 - 6/30/2018
Wage and Supplemental Rate Per Hour: 40% of Journeyperson's rate

Drywall Taper - Second Year

Effective Period: 7/1/2017 - 6/30/2018
Wage and Supplemental Rate Per Hour: 60% of Journeyperson's rate

Drywall Taper - Third Year

Effective Period: 7/1/2017 - 6/30/2018
Wage and Supplemental Rate Per Hour: 80% of Journeyperson's rate

(Local #1974)

TILE LAYER - SETTER
(Ratio of Apprentice to Journeyperson: 1 to 1, 1 to 4)

Tile Layer - Setter - First 750 Hours

Effective Period: 7/1/2017 - 6/30/2018
Wage and Supplemental Rate Per Hour: 50% of Journeyperson's rate

Tile Layer - Setter - Second 750 Hours

Effective Period: 7/1/2017 - 6/30/2018
Wage and Supplemental Rate Per Hour: 55% of Journeyperson's rate

Tile Layer - Setter - Third 750 Hours

Effective Period: 7/1/2017 - 6/30/2018
Wage and Supplemental Rate Per Hour: 65% of Journeyperson's rate

Tile Layer - Setter - Fourth 750 Hours

Effective Period: 7/1/2017 - 6/30/2018
Wage and Supplemental Rate Per Hour: 75% of Journeyperson's rate

Tile Layer - Setter - Fifth 750 Hours

Effective Period: 7/1/2017 - 6/30/2018
Wage and Supplemental Rate Per Hour: 85% of Journeyperson's rate

Tile Layer - Setter - Sixth 750 Hours

Effective Period: 7/1/2017 - 6/30/2018
Wage and Supplemental Rate Per Hour: 95% of Journeyperson's rate

(Local #7)

TIMBERPERSON
(Ratio of Apprentice to Journeyperson: 1 to 1, 1 to 6)

Timberperson - First Year

Effective Period: 7/1/2017 - 6/30/2018
Wage Rate Per Hour: 40% of Journeyperson's rate
Supplemental Rate Per Hour: $32.79

Timberperson - Second Year

Effective Period: 7/1/2017 - 6/30/2018
Wage Rate Per Hour: 50% of Journeyperson's rate
Supplemental Rate Per Hour: $32.79

Timberperson - Third Year

Effective Period: 7/1/2017 - 6/30/2018
Wage Rate Per Hour: 65% of Journeyperson's rate
Supplemental Rate Per Hour: $32.79

Timberperson - Fourth Year

Effective Period: 7/1/2017 - 6/30/2018
Wage Rate Per Hour: 80% of Journeyperson's rate
Supplemental Rate Per Hour: $32.79

(Local #1536)

(NO TEXT ON THIS PAGE)

Leonard A. Mancusi
SENIOR ASSISTANT COMPTROLLER

THE CITY OF NEW YORK
OFFICE OF THE COMPTROLLER
1 CENTRE STREET ROOM 1120
NEW YORK, N.Y. 10007-2341

ALAN G. HEVESI
COMPTROLLER

TELEPHONE: (212) 669-3622
FAX NUMBER: (212) 669-8499

MEMORANDUM

November 6, 2000

To Agency Chief Contracting Officers

From: Leonard A. Mancusi

Re: Security at Construction Sites

Prior to the enactment of Administrative Code §6-109, security guards on construction sites were not subject to prevailing wages. Security guards under the New York State labor law are covered under §230 which provides that prevailing wages are to be paid for security guards in existing buildings. §6-109 of the Administrative Code which was enacted in 1996 closed this loophole by including all security guards working pursuant to a city contract as a prevailing wage trade.

Although some construction contract boilerplate language has been amended to include §6-109, sub-contractors performing security services have advised us that they were not aware of this provision and, since traditionally, security guards were not a covered trade on construction sites, and they were not advised by a prime contractor that they would have to pay prevailing wages, they have not been doing so.

To avoid the possibility of issuing stop payments against prime contractors for the failure of their security service sub-contractors to pay

prevailing wages, we suggest that you write to all your existing security guard sub-contractors and their primes and in the future, upon approval of a security guard sub-contractor, advise the contractors of their obligation to pay prevailing wages under §6-109 of the Administrative Code.

As always, your cooperation is appreciated.

LAM:er
ACCO.SECURITY AT SITES

Department of Design and Construction

INFRASTRUCTURE DIVISION
BUREAU OF DESIGN

VOLUME 2 OF 3

PROJECT ID: SEQ200531

FOR STORM SEWER EXTENSIONS

IN 239TH STREET BETWEEN 87TH AVENUE AND 88TH AVENUE
IN 87TH AVENUE BETWEEN CROSS ISLAND PARKWAY AND 239TH STREET
IN CROSS ISLAND PARKWAY WEST SERVICE ROAD BETWEEN 90TH AVENUE AND 87TH AVENUE

CAPITAL PROJECT WM-1

FOR WATER MAIN WORK

IN 239TH STREET BETWEEN 87TH AVENUE AND 88TH AVENUE
IN 87TH AVENUE BETWEEN CROSS ISLAND PARKWAY AND 239TH STREET
IN CROSS ISLAND PARKWAY WEST SERVICE ROAD BETWEEN 90TH AVENUE AND 87TH AVENUE

Together With All Work Incidental Thereto
BOROUGH OF QUEENS
CITY OF NEW YORK

INTER LAPERUTA JV
Contractor

Dated June 13th, 20 18

APPROVED AS TO FORM
CERTIFIED AS TO LEGAL AUTHORITY

Acting Corporation Counsel

12/26/17

Dated December 26, 20 17

Department of Design and Construction

THE CITY OF NEW YORK
DEPARTMENT OF DESIGN AND CONSTRUCTION
DIVISION OF INFRASTRUCTURE

30-30 THOMSON AVENUE
LONG ISLAND CITY, NEW YORK 11101-3045
TELEPHONE (718) 391-1000
WEBSITE www.nyc.gov/buildnyc

VOLUME 3 OF 3

SCHEDULE A
SPECIFICATIONS AND
REVISIONS TO STANDARD SPECIFICATIONS

FOR FURNISHING ALL LABOR AND MATERIALS NECESSARY AND REQUIRED FOR:

PROJECT ID: SEQ200531

STORM SEWER EXTENSIONS

IN 239TH STREET BETWEEN 87TH AVENUE AND 88TH AVENUE
IN 87TH AVENUE BETWEEN CROSS ISLAND PARKWAY AND 239TH STREET
IN CROSS ISLAND PARKWAY WEST SERVICE ROAD BETWEEN 90TH AVENUE AND 87TH AVENUE

CAPITAL PROJECT WM-1

WATER MAIN WORK

IN 239TH STREET BETWEEN 87TH AVENUE AND 88TH AVENUE
IN 87TH AVENUE BETWEEN CROSS ISLAND PARKWAY AND 239TH STREET
IN CROSS ISLAND PARKWAY WEST SERVICE ROAD BETWEEN 90TH AVENUE AND 87TH AVENUE

Together With All Work Incidental Thereto
BOROUGH OF QUEENS
CITY OF NEW YORK

FOR THE DEPARTMENT OF ENVIRONMENTAL PROTECTION
PREPARED BY
IN-HOUSE DESIGN

November 6, 2017

8-039

Project ID: SEQ200531

VOLUME 3 OF 3

TABLE OF CONTENTS

SECTION	DESCRIPTION	PAGES
SPECIFICATIONS	AND STANDARDS OF NEW YORK CITY	1 OF 2 AND 2 OF 2
SCHEDULE A	GENERAL CONDITIONS TO CONSTRUCTION CONTRACT	SA-1 to SA-12
R - PAGES	REVISIONS TO STANDARD SPECIFICATIONS	R-1 to R-2
SW - PAGES	SEWER AND WATER MAIN SPECIFICATIONS	SW-1 to SW-13
EP7 – PAGES	GAS COST SHARING (EP-7) STANDARD SPECIFICATIONS	EP7-1 to EP7-28B
HAZ – PAGES	SPECIFICATIONS FOR HANDLING TRANSPORTATION AND DISPOSAL OF NONHAZARDOUS AND POTENTIALLY HAZARDOUS CONTAMINATED MATERIALS	HAZ-1 TO HAZ-361
JB – PAGES	JOIN BID SECTION	JB-1 to JB-42

(NO TEXT ON THIS PAGE)

SPECIFICATIONS AND STANDARDS OF NEW YORK CITY

The following New York City Department of Transportation (NYCDOT) reference documents are available on-line at:
http://www1.nyc.gov/site/ddc/resources/publications.page or for purchase between 9:00 A.M. and 3:00 P.M. at 55 Water St., Ground Floor, NYC, N.Y. 10041. Contact: Ms. Vivian Valdez, Tel. (212) 839-9434

1. NYCDOT Standard Highway Specifications, August 1, 2015
2. NYCDOT Standard Highway Details of Construction, July 1, 2010

The following New York City Department of Transportation (NYCDOT) reference documents are available on-line at:
http://www.nyc.gov/html/dot/html/about/dotlibrary.shtml#spec or for purchase between 9:00 A.M. and 3:00 P.M. at 55 Water St., Ground Floor, NYC, N.Y. 10041. Contact: Ms. Vivian Valdez, Tel. (212) 839-9434

1. Specifications for furnishing all labor and material necessary and required for the installation, removal or relocation of street lighting equipment in the City of New York, 1992.
2. Standard Drawings, Division of Street Lighting
3. Specifications for Traffic Signals and Intelligent Transportation Systems Construction and Equipment
4. Standard Drawings for Traffic Signals

The following reference documents for New York City Department of Environmental Protection (NYCDEP) are available on-line at:
http://www1.nyc.gov/site/ddc/resources/publications.page or for pick up between 8:00 A.M. and 4:00 P.M. at 30-30 Thomson Avenue, 3rd Floor, Division of Infrastructure, Long Island City, N.Y. 11101.
Contact: Mr. Nader Soliman, Tel. (718) 391-1179

1. NYCDEP Standard Sewer and Water Main Specifications, July 1, 2014
2. NYCDEP Instructions for Concrete Specifications, Jan. 92
3. NYCDEP General Specification 11-Concrete, November 1991
4. NYCDEP Sewer Design Standards, (September 2007) Revised January 2009

The following reference documents for New York City Department of Environmental Protection (NYCDEP) are available on-line at:
http://www1.nyc.gov/site/ddc/resources/publications.page or for pick up between 8:00 A.M. and 4:00 P.M. at 30-30 Thomson Avenue, 3rd Floor, Division of Infrastructure, Long Island City, N.Y. 11101.
Contact: Mr. Robert Kuhlmann, Tel. (718) 391-2145

1. NYCDEP Water Main Standard Drawings, November 2010
2. Specifications for Trunk Main Work, July 2014
3. Standards for Green Infrastructure, latest version, available only on-line at:
http://www.nyc.gov/html/dep/html/stormwater/green_infrastructure_standards.shtml

Water main work material specifications are available at the Department of Environmental Protection, 59-17 Junction Boulevard, 3rd Floor Low-Rise Building, Flushing, N.Y. 11373-5108.
Contact: Mr. Tarlock Sahansra, P.E., Tel. (718) 595-5302
E-mail: TSAHANSRA@DEP.NYC.GOV

SPECIFICATIONS AND STANDARDS OF NEW YORK CITY

Standard Specifications and Drawings for New York City Fire Department Communications facilities are available from the FDNY Facilities Management Bureau, Plant Operations Engineering, 316 Sgt. Beers Avenue Cluster 1 Box 16, Fort Totten, N.Y. 11359.
Contact: Mr. Ed Durkin, Tel. (718) 281-3933

Tree Planting Standards of the City of New York Parks & Recreation are available at the following Department of Parks & Recreation website:
http://www.nycgovparks.org/pagefiles/53/Tree-Planting-Standards.pdf

SPECIFICATIONS AND STANDARDS OF PRIVATE UTILITIES

The Following reference document for Private Utility Work is available for pick up between 8:30 A.M. and 4:00 P.M. at 30-30 Thomson Avenue, First Floor Bid Procurement Room, L.I.C., N.Y. 11101.

1. CET SPECIFICATIONS AND SKETCHES dated November 2010

SCHEDULE A

(GENERAL CONDITIONS TO CONSTRUCTION CONTRACT (INCLUDING GENERAL CONDITIONS RELATED TO ARTICLE 22 – INSURANCE)

PART I. REQUIRED INFORMATION

INFORMATION FOR BIDDERS SECTION 26 BID SECURITY The **Contractor** shall obtain a bid security in the amount indicated to the right.	Required provided the TOTAL BID PRICE set forth on the Bid Form is $1,000,000. or more. Certified Check: 2% of Bid Amount or Bond: 10% of Bid Amount
INFORMATION FOR BIDDERS SECTION 26 PERFORMANCE AND PAYMENT BONDS The **Contractor** shall obtain performance and payment bonds in the amount indicated to the right.	Required for contracts in the amount of $1,000,000 or more. Performance Security and Payment Security shall each be in an amount equal to 100% of the Contract Price.
INFORMATION FOR BIDDERS DEPARTMENT OF DESIGN AND CONSTRUCTION SAFETY REQUIREMENTS The **Contractor** shall provide the safety personnel as indicated to the right.	■ Project Safety Representative ■ Dedicated, full-time Project Safety Manager
CONTRACT ARTICLE 14 DATE FOR SUBSTANTIAL COMPLETION The **Contractor** shall substantially complete the **Work** in the number of calendar days indicated to the right.	See Page SA-4
CONTRACT ARTICLE 15 LIQUIDATED DAMAGES If the **Contractor** fails to substantially complete the **Work** within the time fixed for substantial completion plus authorized time extensions or if the **Contractor**, in the sole determination of the **Commissioner**, has abandoned the **Work**, the **Contractor** shall pay to the **City** the amount indicated to the right.	$2000.00 for each consecutive calendar day over substantial completion time
CONTRACT ARTICLE 17. SUB-CONTRACTOR The **Contractor** shall not make subcontracts totaling an amount more than the percentage of the total **Contract** price indicated to the right.	Not to exceed 35 % of the **Contract** price

CONTRACT ARTICLE 21. RETAINAGE The **Commissioner** shall deduct and retain until the substantial completion of the **Work** the percent value of the **Work** indicated to the right.	5 % of the value of the **Work**
CONTRACT ARTICLE 22. (Per Directions Below)	See pages SA-5 through SA-12
CONTRACT ARTICLE 24. DEPOSIT GUARANTEE As security for the faithful performance of its obligations, the **Contractor**, upon filing its requisition for payment on **Substantial Completion**, shall deposit with the **Commissioner** a sum equal to the percentage of the **Contract** price indicated to the right.	1% of **Contract** price
CONTRACT ARTICLE 24. PERIOD OF GUARANTEE Periods of maintenance and guarantee other than the period set forth in Article 24.1 are indicated to the right.	Eighteen (18) Months, excluding Trees Twenty-four (24) Months for Tree Planting
CONTRACT ARTICLE 74. STATEMENT OF WORK The **Contractor** shall furnish all labor and materials and perform all **Work** in strict accordance with the **Contract Drawings**, **Specifications,** and all **Addenda** thereto, as **shown in the column to the right.**	**Addenda**, numbered: 4
CONTRACT ARTICLE 75. COMPENSATION TO BE PAID TO CONTRACTOR The **City** shall pay and the **Contractor** shall accept in full consideration for the performance of the **Contract**, subject to additions and deductions as provided herein, the total sum **shown in the column to the right,** being the amount at which the **Contract** was awarded to the **Contractor** at a public letting thereof, based upon the **Contractor's** bid for the **Contract.**	Amount for which the **Contract** was Awarded: Eight million, nine hundred ninety-six thousand four hundred seventy-five dollars and thirty five cents Dollars ($ 8,996,475.35)
CONTRACT ARTICLE 79. PARTICIPATION BY MINORITY-OWNED AND WOMEN-OWNED BUSINESS ENTERPRISES IN CITY PROCUREMENT	See M/WBE Utilization Plan in the Bid Booklet

STANDARD HIGHWAY SPECIFICATIONS SECTION 6.40 LIQUIDATED DAMAGES FOR ENGINEER'S FIELD OFFICE If the Contractor fails to satisfactorily provide the field office and all equipment specified in **Section 6.40 - Engineer's Field Office**, and/or if a cited deficiency exceed seventy two (72) hours after notice from the Engineer in writing, or is permitted to recur, liquidated damages will be assessed in the amount specified herein for each subsequent calendar day or part thereof that a cited deficiency resulting in nonpayment, as described in **Section 6.40.5**, is not corrected.	For Each Calendar Day of Deficiency: $500.00
STANDARD HIGHWAY SPECIFICATIONS SECTION 6.70 LIQUIDATED DAMAGES FOR MAINTENANCE AND PROTECTION OF TRAFFIC	$ 250.00 for each instance of failure to comply with the Maintenance and Protection of Traffic requirements within three (3) hours after written notice from the Engineer. $ 500.00 for each and every hour of failing to open the entire width of roadway to traffic the morning following a night/weekend work operation.
STANDARD HIGHWAY SPECIFICATIONS SECTION 7.13 LIQUIDATED DAMAGES FOR MAINTENANCE OF SITE If the Contractor fails to comply, within three (3) consecutive hours after written notice from the Engineer, with the requirements of **Section 7.13 - Maintenance of Site**, the Contractor shall pay to the City of New York, until such notice has been complied with or rescinded, the sum specified above per calendar day, for each instance of such failure, as liquidated damages and not as a penalty, for such default.	$ 250.00 for each calendar day, for each occurrence

Date for Substantial Completion (Reference: Article 14)

The Contractor shall substantially complete the Work within the Final Contract Duration determined in accordance with the terms and conditions set forth herein.

The Base Contract Duration for this project is _____635_____consecutive calendar days ("ccds").
The Final Contract Duration shall be the Base Contract Duration when a check mark is indicated before the word "NO", below, and shall be the Base Contract Duration adjusted by the table set forth below when a check mark is indicated before the word "YES", below.

___√___ YES _____ NO

When the Final Contract Duration is indicated above to be adjusted by the table below, the table may increase the Base Contract Duration depending on the date of scheduled substantial completion to avoid a scheduled substantial completion of the Work during the winter months. The date of scheduled substantial completion shall be determined by adding the Base Contract Duration to the date specified to commence work in the written Notice to Proceed. The Final Contract Duration shall then be determined as follows:

(a) Find the row that corresponds to the month of substantial completion based on the Base Contract Duration added to the date specified to commence work in the written Notice to Proceed.
(b) Find the number of days to be added to the Base Contract Duration in the table below. Add that number of days to the Base Contract Duration to obtain the Final Contract Duration in consecutive calendar days.

Month of Substantial Completion based on the Base Contract Duration	Number of Days of adjustment
January	150
February	120
March	90
April	60
May	30
June	0
July	0
August	0
September	0
October	0
November –December 15	0
December 16 – December 31	180

In addition, should Item No. 9.30, "Storm Water Pollution Prevention," exist in the Contract and the required Storm Water Pollution Prevention Plan (SWPPP) does not conform to NYSDEC's recommended Standards, an additional 60 ccd shall be added to the above Final Contract Duration.

(GENERAL CONDITIONS RELATING TO ARTICLE 22 – INSURANCE)

PART II. TYPES OF INSURANCE, MINIMUM LIMITS AND SPECIAL CONDITIONS

Note: All certificate(s) of insurance submitted pursuant to Contract Article 22.3. 3 must be accompanied by a Certification by Broker consistent with Part III below and include the following information:

- **For each insurance policy, the name and NAIC number of issuing company, number of policy, and effective dates;**
- **Policy limits consistent with the requirements listed below;**
- **Additional insureds or loss payees consistent with the requirements listed below; and**
- **The number assigned to the Contract by the City (in the "Description of Operations" field).**

Insurance indicated by a blackened box (■) or by X in a □ to left will be required under this contract

Types of Insurance (per Article 22 in its entirety, including listed paragraph)	Minimum Limits and Special Conditions
■ Commercial General Liability Art. 22.1.1	The minimum limits shall be $ 3,000,000 per occurrence and $ 6,000,000 per project aggregate applicable to this **Contract.** Additional Insureds: 1. City of New York, including its officials and employees, with coverage at least as broad as ISO Form CG 20 10 and CG 20 37, 2. All person(s) or organization(s), if any, that Article 22.1.1(b) of the **Contract** requires to be named as Additional Insured(s), with coverage at least as broad as ISO Form CG 20 26. The Additional Insured endorsement shall either specify the entity's name, if known, or the entity's title (e.g., Project Manager), 3. Consolidated Edison Company of New York

■ Workers' Compensation Art. 22.1.2 ■ Disability Benefits Insurance Art. 22.1.2 ■ Employers' Liability Art. 22.1.2 ☐ Jones Act Art. 22.1.3 ☐ U.S. Longshoremen's and Harbor Workers Compensation Act Art. 22.1.3	Workers' Compensation, Employers' Liability, and Disability Benefits Insurance: Statutory per New York State law without regard to jurisdiction. **Note:** The following forms are acceptable: (1) New York State Workers' Compensation Board Form No. C-105.2, (2) State Insurance Fund Form No. U-26.3, (3) New York State Workers' Compensation Board Form No. DB-120.1 and (4) Request for WC/DB Exemption Form No. CE-200. The City will not accept an ACORD form as proof of Workers' Compensation or Disability Insurance. Jones Act and U.S. Longshoremen's and Harbor Workers' Compensation Act: Statutory per U.S. Law. ☐ Additional Requirements:
☐ Builders' Risk Art. 22.1.4	☐ Required: 100% of total bid amount ☐ Required: 100 % of total bid amount for Item(s): **Contractor** the Named Insured; the **City** both an Additional Insured and one of the loss payees as its interests may appear. If the **Work** does not involve construction of a new building or gut renovation work, the **Contractor** may provide an installation floater in lieu of Builders Risk insurance. Note: Builders Risk Insurance may terminate upon **Substantial Completion** of the **Work** in its entirety.

■Commercial Auto Liability Art. 22.1.5	$ 2,000,000 per accident combined single limit If vehicles are used for transporting hazardous materials, the **Contractor** shall provide pollution liability broadened coverage for covered vehicles (endorsement CA 99 48) as well as proof of MCS 90 Additional Insureds:
☐Contractors Pollution Liability Art. 22.1.6	$ 5,000,000 per occurrence $ 5,000,000 aggregate Additional Insureds: 1. City of New York, including its officials and employees, and 2. _____ 3. _____
☐ Marine Protection and Indemnity Art. 22.1.7(a)	$_____ each occurrence $_____ aggregate Additional Insureds: 1. City of New York, including its officials and employees, and 2. _____ 3. _____
☐ Hull and Machinery Insurance Art. 22.1.7(b)	$_____ per occurrence $_____ aggregate Additional Insureds: 1. City of New York, including its officials and employees, and 2. _____ 3. _____

☐ Marine Pollution Liability Art. 22.1.7(c)	$ 1,000,000 per occurrence $ 1,000,000 aggregate Additional Insureds: 1. City of New York, including its officials and employees, and 2. _____ 3. _____
[OTHER] Art. 22.1.8 ☐ Railroad Protection Liability Policy (ISO-RIMA or equivalent form) approved by Permittor covering the work to be performed at the designated site and affording protection for damages arising out of bodily injury or death, physical damage to or destruction of property, including damage to the Insured's own property and conforming to the following: • Policy Endorsement CG 28 31 - Pollution Exclusion Amendment is required to be endorsed onto the policy when environmental-related work and/or exposures exist. • Indicate the Name and address of the Contractor to perform the work, the Contract # and the name of the railroad property where the work is being performed and the Agency Permit. • Evidence of Railroad Protective Liability Insurance, must be provided in the form of the Original Policy. A detailed Insurance Binder (ACORD or Manuscript Form) will be accepted pending issuance of the Original Policy, which must be provided within 30 days of the Binder Approval.	$ 2,000,000 per occurrence $ 6,000,000 annual aggregate Named Insureds: 1. 2.

[OTHER] Art. 22.1.8

☐ Professional Liability

A. The Contractor's Professional Engineer shall maintain and submit evidence of Professional Liability Insurance in the minimum amount of $1,000,000 per claim. The policy or policies shall include an endorsement to cover the liability assumed by the Contractor under this Contract arising out of the negligent performance of professional services or caused by an error, omission or negligent act of the Contractor's Professional Engineer or anyone employed by the Contractor's Professional Engineer.

B. Claims-made policies will be accepted for Professional Liability Insurance. All such policies shall have an extended reporting period option or automatic coverage of not less than two (2) years. If available as an option, the Contractor's Professional Engineer shall purchase extended reporting period coverage effective on cancellation or termination of such insurance unless a new policy is secured with a retroactive date, including at least the last policy year.

[OTHER] Art. 22.1.8	
■ Engineer's Field Office **Section 6.40, Standard Highway Specifications**	Fire insurance, extended coverage and vandalism, malicious mischief and burglary, and theft insurance coverage in the amount of <u>$40,000</u>

[OTHER] Art. 22.1.8

☐ The Following Additional Insurance Must Be Provided:

Umbrella/Excess Liability Insurance - The Contractor shall provide Umbrella/Excess Liability Insurance in the minimum amount of $10,000,000 per Occurrence and $10,000,000 in Aggregate. The policy terms and condition should be at least as broad as the underlying policies. The underlying policies should comply with the insurance provision as outlined by the contract. Defense cost should be in addition to the limit of liability. The City of New York, including its officials and employees, should be included as additional insured as respects to the noted project.

SCHEDULE A
(GENERAL CONDITIONS TO CONSTRUCTION CONTRACT)
(GENERAL CONDITIONS RELATING TO ARTICLE 22 – INSURANCE)

PART III. CERTIFICATES OF INSURANCE

All certificates of insurance (except certificates of insurance solely evidencing Workers' Compensation Insurance, Employer's Liability Insurance, and/or Disability Benefits Insurance) must be accompanied by one of the following:

(1) the Certification by Insurance Broker or Agent on the following page setting forth the required information and signatures;

-- OR --

(2) copies of all policies as certified by an authorized representative of the issuing insurance carrier that are referenced in such certificate of insurance. If any policy is not available at the time of submission, certified binders may be submitted until such time as the policy is available, at which time a certified copy of the policy shall be submitted.

CITY OF NEW YORK

CERTIFICATION BY INSURANCE BROKER OR AGENT

The undersigned insurance broker represents to the City of New York that the attached Certificate of Insurance is accurate in all material respects.

_____
[Name of broker or agent (typewritten)]

_____
[Address of broker or agent (typewritten)]

_____
[Email address of broker or agent (typewritten)]

_____
[Phone number/Fax number of broker or agent (typewritten)]

_____
[Signature of authorized official, broker, or agent]

_____
[Name and title of authorized official, broker, or agent (typewritten)]

State of .....)
) ss.:
County of .....)

Sworn to before me this _____ day of _____, 20____

_____
NOTARY PUBLIC FOR THE STATE OF _____

SCHEDULE A

(GENERAL CONDITIONS TO CONSTRUCTION CONTRACT)

PART IV. ADDRESS OF COMMISSIONER

Wherever reference is made in Article 7 or Article 22 to documents to be sent to the **Commissioner** (e.g., notices, filings, or submissions), such documents shall be sent to the address set forth below or, in the absence of such address, to the **Commissioner's** address as provided elsewhere in this **Contract**.

DDC Director, Insurance Risk Manager

30 – 30 Thomson Avenue, 4th Floor (IDCNY Building)

Long Island City, NY 11101

(NO FURTHER TEXT ON THIS PAGE)

R - PAGES

REVISIONS TO STANDARD SPECIFICATIONS

NOTICE

The Specification Bulletin(s) ("SB(s)") referenced in this Section (R-Pages) may consist of revisions to the following Standard Specifications:

- New York City Department of Transportation ("NYC DOT") Standard Highway Specifications, dated 8/1/2015;
- New York City Department of Environmental Protection ("NYC DEP") Standard Sewer and Water Main Specifications, dated 7/1/2014; and
- NYC DEP Specifications for Trunk Main Work, dated 7/2014.

The SB(s) modify and supersede portions of the applicable Standard Specifications. The provisions contained in this Contract's I-Pages, S-Pages and SW-Pages may further modify the applicable Standard Specifications.

The following SB(s) apply to this contract:

- SB 16-001 – REVISIONS TO THE NYC DOT STANDARD HIGHWAY SPECIFICATIONS.
- SB 16-002 – REVISIONS TO THE NYC DEP STANDARD SEWER AND WATER MAIN SPECIFICATIONS.
- SB 17-001 – UV CURED-IN-PLACE-PIPE (CIPP) LINING METHOD
- SB 17-002 – RODENT AND WATERBUG PEST CONTROL
- SB 17-003 – ENGINEERS FIELD OFFICE
- SB 17-004 – FIRE DEPARTMENT FACILITIES
- SB 17-005 – DIGITAL PHOTOGRAPHS
- SB 17-006 – RECORDS OF SUBSURFACE STRUCTURES
- SB 17-007 – MOBILIZATION
- SB 17-008 – QUALIFICATION CARDS
- SB 17-009 – SALVAGEABLE MATERIALS
- SB 17-010 – MILLED ASPHALTIC CONCRETE AGGREGATE
- SB 17-011 – DETECTABLE WARNING UNIT COLOR

- SB 17-012 – TEMPORARY HOUSE CONNECTION MATERIAL

The SB(s) are available online at:
http://www1.nyc.gov/site/ddc/resources/specification-bulletins.page or for pickup between 8:00 AM and 4:00 PM at 30-30 Thomson Avenue, 3rd Floor, Division of Infrastructure, Long Island City, NY 11101. Contacts:

- Mr. Richard Jones, (718) 391-1417
- Mr. Salman Macktoom, (718) 391-2041

(NO FURTHER TEXT THIS PAGE)

SW - PAGES

SEWER AND WATER MAIN REVISIONS TO SPECIFICATIONS

NOTICE

The Standard Sewer And Water Main Specifications of the Department of Environmental Protection (dated July 1, 2014), Sewer Design Standards of the Department of Environmental Protection (dated (September 2007) (Revised January 2009), Water Main Standard Drawings of the Department of Environmental Protection (latest revisions), and Specifications For Trunk Main Work of the Department of Environmental Protection (dated July 2014) of The City of New York, shall be included as part of the contract documents. These said specifications and standard drawings are hereby revised under the following section headings:

A. NOTICE TO BIDDERS
B. REVISIONS TO THE STANDARD SEWER AND WATER MAIN SPECIFICATIONS

NO TEXT ON THIS PAGE

A. NOTICE TO BIDDERS

(1) The Contractor is notified that a Notice To Proceed (NTP) date will be issued for work to commence within twenty-one (21) to thirty (30) days of Contract Registration.

(2) The Contractor shall furnish, install, maintain and subsequently remove temporary Protective Tree Barriers. Protective Tree Barriers shall be Type B, unless otherwise directed by the Engineer, and shall be constructed and installed as shown on the Protective Tree Barrier sketch in Department Of Transportation, Standard Highway Details Of Construction, Drawing No. H-1046A, as directed by the Engineer, and in accordance with Department of Parks and Recreation requirements.

(3) All utility locations and invert elevations are not guaranteed, nor is there any guarantee that all existing utilities, whether functional or abandoned within the project area are shown.

(4) All existing house connections shall be maintained and supported during construction. The Contractor shall replace any existing house connection damaged as a result of the Contractor's construction operations as ordered by the Engineer at no cost to the City.

(5) The Contractor is advised that any City owned light poles, traffic signals, street name signs, traffic signs and encumbrances including, but not limited to, underground conduit displaced as the result of the installation of the new sewers, water mains, catch basins, catch basin connections and appurtenances shall be replaced in kind and as directed by the Engineer. All work shall be performed according to NYCDOT Bureau of Traffic's Standard Drawings and Specifications, and the cost of such work shall be deemed included in the prices bid for all items of work under this contract.

It is the Contractor's responsibility to secure an approved electrical contractor to perform all traffic signal work (if any). For list of approved electrical contractors, contact Mr. Michael R. LeFosse of New York City Department of Transportation at (212) 839-3799.

(6) The Contractor is notified that Victaulic Style 77 Coupling is no longer acceptable for use in any steel water main work. All reference to Victaulic Style 77 Coupling within the Standard Sewer And Water Main Specifications of the Department of Environmental Protection (dated July 1, 2014), the Water Main Standard Drawings of the Department of Environmental Protection (latest revisions), the Specifications For Trunk Main Work (dated July 2014), and the contract drawings, shall be replaced with Bolted Split-Sleeve Restrained Coupling.

(7) The Contractor is notified that wherever the Item No. "6.52" and words "flagger", "flagperson" and "flagman" are used in the contract documents and drawings it shall mean the Item No. "6.52 CG" and the words "Crossing Guard", respectively. The Contractor is advised that until the Comptroller of the City of New York sets a prevailing wage rate for crossing guards, there are no prevailing wage rates for crossing guards.

(8) The Contractor is notified that the fuel cost per gallon used in the formula under **Sub-Article 26.2.8** of the Standard Construction Contract for **Extra Work** will be derived from the fuel price index for the United States East Coast published weekly by the United States Energy Information Administration ("USEIA"), and available on its website at http://www.eia.gov/petroleum/gasdiesel/ . The USEIA published cost per gallon for the applicable fuel on the East Coast for the week in which the first day of each calendar quarter during the contract term occurs (i.e., January 1st, April 1st, July 1st and September 1st) will be used in the reimbursement formula for all **Extra Work** invoiced that was performed during that calendar quarter. Should the USEIA stop publishing this fuel price index, the fuel cost per gallon will be determined by reference to a substitute index to be agreed upon by the Contractor and the City.

(9) The Contractor is advised that where the existing roadway pavement is designated to be replaced from curb to curb, then no full depth saw cutting of pavement for sewer and water main trenches will

be required, except at the limits of full width pavement restoration. No separate or additional payment will be made for any saw cutting.

(10) The Contractor is advised that at some locations, the storm sewers are to be installed to cross over existing sanitary sewers that shall remain undisturbed in place. The Contractor shall exercise extreme caution and take all necessary precautions in placing sheeting during excavation to prevent any damages to the said existing sanitary sewers while working over it. The Contractor shall not make any claims to the City for additional work in relation to the above or in rectifying any damages caused by him/her, and/or extra compensations on account thereof. Should any portion of the existing sewers be damaged, the Contractor shall be held responsible and shall make all repairs at his/her own expense to the satisfaction of the Engineer

(11) The contractor is advised that there are 14 Green Infrastructures(Bioswales) are proposed in the project area, these shall be constructed as per the Contract Drawings and DEP/Green Infrastructure Standards and Specifications and as directed by the Engineer. All work related this scope shall be coordinated with DDC/Green Infrastructure & DEP/Green Infrastructure during Construction.

(12) The proposed catch basins in Cross Island Parkway West Service Road by the South curb, are situated close to existing concrete structures. For the installation of these, contractor shall adopt means and methods of construction in such away that it causes no damages to these existing structures. and cost of all such work shall be deemed included in prices bid for catch basins. If any damage occurs to these structures due to any construction activities, the contractor shall repair and replace the same, in kind to the satisfaction of the engineer at no cost to the city.

(13) The contractor is advised that there is proposed construction of a chamber in Cross Island Parkway West Service Road, between 89th Avenue and 90th Avenue, by Exit 28A Hillside Avenue of Cross Island Parkway. The contractor shall procure all necessary NYSDOT permits if needed, for the maintenance and protection of traffic in that area for executing construction.

(14) **"As-Built" Drawings For Water Mains And Appurtenances 24-Inches (600-mm.) And Larger:** Upon the completion of the work and as a condition precedent to obtaining the certificate for substantial completion for the project under **Article 44** of the Contract, the Contractor shall furnish "**As-Built**" drawings for water mains and appurtenances 24-inches and larger to the City. The Contractor shall prepare and submit the "**As-Built**" record drawings to the Engineer for approval. Approved "**As-Built**" drawings shall be delivered to the Department of Design and Construction, 30-30 Thomson Avenue, Long Island City, New York, 11101-3045. The following guideline is provided for the preparation of "**As-Built**" record drawings:

(A) The Contractor shall prepare the "**As-Built**" drawings on AutoCAD and shall provide to the City two (2) sets of Mylar and AutoCAD files on a CD. The drawings on CD's and the plotted Mylar's shall conform to the standard size of 22" x 36" (559-mm. x 914-mm.) using a 1"=30' (1:360) horizontal and 1"=10' (1:120) vertical scale. The Mylar shall be 3-mil in thickness.

(B) The "**As-Built**" drawings shall include but not be limited to the following guidelines summarized below:

(1) Drawings shall consist of the same legend and layout of title boxes shown on the contract drawings.
(2) Each plotted Mylar drawing shall contain the signature and stamp of the Contractor's NYS Professional Engineer/Registered Architect.
(3) The drawings shall include:
  (a) street name and crossing street(s) or distance from;
  (b) north arrow;
  (c) property lines and widths;
  (d) legal and existing street widths, street alignment and grades;

(e) "new" curb lines and widths;
(f) water main center line measured off the "new" curb line;
(g) horizontal stationing for all valves, hydrants, outlets, blow-offs, house service connections, etc., measured on a horizontal line as established by the Borough Office Bureau of Topographic;
(h) alignment and appurtenance location stationing, and deflection angles;
(i) cover and elevations (Datum used shall be that of the Borough where work is located);
(j) location of pipe joints;
(k) profile of all piping;
(l) complete details of all outlet piping roundabouts;
(m) complete details of all blow-off connections to the sewer;
(n) complete details of all air cocks;
(o) location of taps and access manholes;
(p) location of all cathodic protection stations;
(q) Venturi sensing lines plans and profiles;
(r) all appropriate notes.

(C) The cost of preparing and submitting "**As-Built**" approved drawings shall be deemed included in the prices bid for all scheduled bid items in the contract. No separate or additional payment will be made for this work.

B. REVISIONS TO THE STANDARD SEWER AND WATER MAIN SPECIFICATIONS

(1) **Refer** to **Subsection 10.15 - Notice To Utility Companies, Etc., To Remove Structures Occupying Place Of Sewers, Water Mains Or Appurtenances**, Page I-11:
Add the following to **Subsection 10.15**:

(1) CONSOLIDATED EDISON COMPANY OF NEW YORK (Con Ed)

There are CONSOLIDATED EDISON facilities in the areas of construction. The Contractor shall notify CONSOLIDATED EDISON at least seventy-two (72) hours prior to the start of construction by contacting Peter Ines at (718) 810- 3010 and Alan Owen at (718) 802 - 3017.

(2) VERIZON

There are VERIZON facilities in the areas of construction. The Contractor shall notify VERIZON at least seventy-two (72) hours prior to the start of construction by contacting Waqas Iqbal at (917) 412 – 9273 and Dinesh Patel at (631) 777 - 2280

(3) SPECTRUM

There are SPECTRUM facilities in the areas of construction. The Contractor shall notify SPECTRUM at least seventy-two (72) hours prior to the start of construction by contacting Alain Jean Baptiste at (646) 691 - 5455.

(2) **Refer** to **Subsection 10.21 - Contractor To Notify City Departments**, Page I-13:
Add the following to **Subsection 10.21**:

(1) N.Y.C. D.E.P., BUREAU OF WATER AND SEWERS OPERATIONS

The Contractor shall notify Mr. Peter Gordon, P.E., Chief, Linear Capitol South East Queens Program Management Division at the Department of Environmental Protection, 59-17 Junction Blvd., 3rd floor low rise, Corona N.Y. 11368, at least thirty (30) days prior to the start of construction.

(2) NEW YORK CITY FIRE DEPARTMENT

The Contractor shall notify the Division of Fire Communications at least forty-eight (48) hours prior to the start of construction by contacting Mr. Nick Varone at (718) 624-4194.

(3) N.Y.C. DEPARTMENT OF TRANSPORTATION

The Contractor shall notify Mr. Michael Lofesse/ Ghanshyyam Patel Signal/Street Lighting Operations, 34-02 Queens Blvd., Long Island City N.Y. 11101 at (718) 786-2028, at least seventy-two (72) hours prior to the start of construction.

(4) N.Y.C. DEPARTMENT OF PARKS AND RECREATION

The Contractor shall notify the Parks Department at least seventy-two (72) hours prior to the start of construction by contacting Mr.Jason Conheeney at (718) 965-7740.

(5) N.Y.C. TRANSIT AUTHORITY

(a) The Contractor is advised that bus routes as well as bus stops, within the scope of this project may be affected during construction operations. The Contractor shall notify the Transit Authority at least two (2) weeks prior to the start of construction, in order to make the necessary arrangements.

Arrangements shall be made through:

Ms. Sarah Wyss
Director Of Short Range, Bus Service Planning (SRB)
New York City Transit
2 Broadway, 17th Floor
New York, N.Y. 10004
Telephone No. (646) 252-5517
sarah.wyss@nyct.com

(3) **Refer** to **Subsection 10.30 - Contractor To Provide For Traffic**, Page I-15:
Add the following to **Subsection 10.30**:

(1) Traffic Stipulations:

The Contractor shall refer to the Traffic Stipulations (six (6) pages) that are attached to the end of this addendum, and as directed by the Engineer.

(4) **Refer** to **Subsection 40.02.15 - Disposal Of Water From Trenches**, Page IV-9:
Add the following to **Subsection 40.02.15**:

(A) The Department of Design and Construction has **not** filed application for Dewatering Permit with the New York State Department of Conservation (NYSDEC), under the Environmental Conservation Law (ECL), Title 15 of Article 15, for a Temporary Well Point System Permit. However, it is anticipated that the criteria for rate of pumping specified here before in this section will be exceeded in areas of construction; the Contractor shall be responsible for applying and obtaining the necessary dewatering permit prior to the dewatering of trenches within the scope of this project.

As part of the permit application the Contractor will be required to comply with all the requirements of **Section 40.14** of this addendum.

Copies of all materials submitted to NYSDEC shall be sent to the New York City Department of Design and Construction (NYCDDC), Infrastructure/Design.

The following minimum requirements set forth by the New York Department of Environmental Conservation shall be complied with prior to the start of work in areas of construction requiring dewatering permit:

(1) An analysis must be made of water samples taken. The results are to be submitted to the Regional Permit Administrator. An analysis shall be made for BOD, salinity, oil, and grease. The samples shall be analyzed by a laboratory certified by the New York State Health Department and the results are to be submitted directed to the New York State Department of Environmental Conservation by the laboratory.

(2) Prior to setting any wells, wellpoints or header pipes, the Contractor shall submit to the NYSDEC a layout of the complete dewatering system including the location of the

discharge point. When permitted by the NYSDEC, discharge of groundwater on the beach areas shall be done in such a manner as to eliminate any erosion or siltation and will require the installation of splash blocks and/or settling basins.

The Contractor is advised that all work required in obtaining a permit, must be submitted to, and approved by the NYSDEC prior to the commencement of any work in areas of construction requiring dewatering permit. No payment for any item of work will be made, and no shop drawing shall be approved for the areas of construction until such time that a written approval is obtained from the NYSDEC.

(B) The Contractor is advised that all work shall be governed by the provisions and requirements of the obtained permit, and their said provisions and requirements shall be made a part of the contract and the Contractor shall be responsible for strict adherence thereto.

The cost of all work required for applying, complying and obtaining required dewatering permits including the cost for any required updating of permits shall be deemed included in the prices bid for all item of this contract. No additional or separate payment will be made for any work required in order to comply with these requirements.

(5) **Refer** to Page IV-34:
Add the following new **Section 40.14**:

SECTION 40.14
DEWATERING PERMITS

40.14.1 DESCRIPTION

Under this contract, and at locations where groundwater will be present in the trenches and excavations, the Contractor is required to install, maintain and operate a temporary dewatering system of sufficient size and capacity to control ground and surface water flow into the excavation and to allow all work to be accomplished in the "dry condition".

The Contractor shall be required to obtain the following permits in order to operate a temporary dewatering system.

(A) A Dewatering/Discharge Permit from the New York City Department of Environmental Protection (NYCDEP);

(B) A Long Island Well Permit from the New York State Department of Environmental Conservation (NYSDEC), under the Environmental Conservation Law (ECL), Title 15 of Article 15, implemented by 6NYCRR Part 601 - Water Supply and Part 602 - Long Island Well. This permit is required only in the Boroughs of Brooklyn and Queens to withdraw water using a well point or deep well system where the total capacity of such well or wells is in excess of 45-gallons per minute (or 64,800-gallons per day); and,

(C) An Industrial State Pollutant Discharge Elimination System (SPDES) or a Non-Jurisdictional Determination Letter in compliance with Title 8 and 7 of Article 17 of the Environmental Conservation Law of New York State, respectively.

The Contractor is advised that the provisions and requirements of the aforementioned permits shall govern all work, and the said provisions and requirements are hereby made a part of the sewer contract and the Contractor shall be responsible for strict adherence thereto.

No dewatering work shall commence until the above-mentioned Permits have been obtained for this project.

The Contractor is advised that in order to comply with all the permits requirements, the Contractor will be required to submit maps, test data, etc. prior to the start of work. In order to expedite the processing of the permit and its requirements, the Contractor shall be required to obtain the services of an independent Environmental Scientist as herein described below in **Subsection 40.14.2** to perform this work and act as liaison with NYSDEC and NYCDEP.

40.14.2 QUALIFICATIONS

The Environmental Scientist utilized to perform the work required under this section must have adequate experience in work of this nature (obtaining Long Island Well Permit/Dewatering Permit) and must have previous experience in working with the NYSDEC and the NYCDEP, designing equivalent dewatering systems, and have successfully obtained the type of permits required under this contract. Prior to the start of work, the Contractor will be required to submit the name and resume of the Environmental Scientist for approval.

40.14.3 NYSDEC DEWATERING PERMITS

The dewatering system shall be designed by the Environmental Scientist using accepted and professional methods of design and engineering consistent with the best modern practices.

The material to be submitted shall include, but not be limited to the following:

(1) Site Plan - Scaled, showing construction activity (e.g. excavation, pathway of the pipe, new outfalls, etc.) locations of well points, header pipes and pumps, and all staging and storage areas.

Also included herein shall be a layout of the complete dewatering system including the location of the discharge point. When permitted by the NYSDEC, discharge of groundwater on beach areas shall be done in such a manner as to prevent any erosion or siltation and will require the design and installation of splash blocks and/or settling basins.

(2) Dewatering System Specifications:

(a) Number of Well Points
(b) Diameter of Well Points
(c) Spacing of Well Points
(d) Length to Screen
(e) Depth to Bottom of Screen
(f) Static Water Level
(g) Drawdown Required
(h) Total Volume Pumped
(i) Number of Pumps
(j) Capacity of Pumps
(k) Duration of Pumping
(l) Initial and Average GPM
(m) Estimated Daily Pumpage
(n) Flow Meter

(3) Cross Section - Scaled, showing well points, riser, header, annular material (if used) and other equipment associated with each point. A typical construction style drawing may be utilized. Should the Contractor be permitted to use a deep well system, all information regarding it must be submitted.

(4) Drawdown Contour Map - Based upon a review of the surrounding area affected by the dewatering and upon boring within the project area and characteristics of the soils, the depth and pumping rate of dewatering system and the duration of the pumping, the Environmental Scientist shall submit both a narrative and diagram showing the anticipated maximum cone of depression which shall be shown from both above and in cross section on scaled diagrams. Contour lines on diagrams shall be labeled to show depth from land surface.

(5) Description of Site and Adjacent Areas - A short narrative shall be prepared describing the land use in the area paying attention to any potential sources of groundwater contamination that may migrate into the well's cone of depression, such as gas stations, chemical plants, wrecking yards, sanitary landfills, etc. Latest map of the area shall be included in the narrative.

(6) Groundwater Analysis - The Environmental Scientist shall develop and submit a sampling and analysis program subject to NYSDEC Approval (a minimum of one groundwater sample from a site well shall be collected and analyzed). A laboratory certified by the New York State Health Department shall analyze the samples. The sampling and analysis program must include but is not limited to the following:

NYSDEC REGION 2 - DEWATERING PROJECTS SAMPLING INFORMATION

NO.	PARAMETERS	TYPE	EPA METHOD	DETECTION
1	pH	Grab	150.1	EPA min
2	Temperature	°F	After Pumping	EPA min
3	Fecal Coliform	Grab	5-Tubes/3-Dilutions	2-MPN/100-ml
4	Oil & Grease	Grab	413.1	EPA min
5	BOD5	Grab	405.1	EPA min
6	Total Suspended Solids	Grab	160.2	EPA min
7	Settleable Solids	Grab	160.5	EPA min
8	Chlorides	Grab	325.1-325.3	EPA min
9	Benzene	Grab	602	EPA min
10	Toluene	Grab	602	EPA min
11	Xylenes	Grab	602	EPA min
12	Ethylbenzene	Grab	602	EPA min
13	PCB's	Grab	608	(See Note 1)
14	Pesticides	Grab	608	EPA min
15	13 Priority Metals	Grab	200 series	EPA min
16	Acids Base/Neutrals	Grab	625-GC/MS	EPA min
17	Halogenated Volatiles	Grab	601-GC	EPA min
18	Nitrate/Nitrite	Grab	300 or 353.3	EPA min
19	Aromatic Volatiles	Grab	602-GC	EPA min
20	Cyanide (total or amenable)	Grab	335.1/335.2	EPA min

NOTE:

(1) List each individual aroclor found and report the concentration of each aroclor tested. Use the N.Y.S. detection limit, which is 0.065-µg/l.

Small dewatering projects with a total estimated pumped volume up to 15-Million Gallons (MG) require sampling analysis for parameters No.'s 1 through 12.

Medium dewatering projects with a total estimated pumped volume between 15-MG and 60-MG require sampling analysis for parameters No.'s 1 through 14.

Large dewatering projects with a total estimated pumped volume greater than 60-MG require sampling analysis for parameters No.'s 1 through 20.

Samples are to be collected after development of the well by a licensed well driller.

A laboratory certified by the NYS Department of Health must conduct all testing.

Irrespective of the aforementioned sampling requirements based on total estimated pumped volumes, the Department may require sampling of additional parameters if the proposed dewatering site is suspected of being contaminated.

40.14.4 SUBMISSION OF DEWATERING PLAN

The Environmental Scientist will be required to submit two (2) copies of the Dewatering Plan (together with all reports, materials, designs, drawings, maps and plans) to the Infrastructure Engineering Support Unit for review and approval. Once approved the Environmental Scientist shall submit in triplicate the Final Dewatering Plan to both the NYSDEC and the NYCDEP. The Dewatering Plan should be bound and bear the name of the Contractor, NYSDEC Application Number and the Signature of the preparer. All drawings and maps shall be on sheets 27-inches by 40-inches and to scale not less than 1"=30'.

40.14.5 DAMAGES

The Contractor shall be responsible for and shall repair at no cost to the City any damage caused by inadequate or improper design and operation of the dewatering system, and any mechanical or electrical failure of the dewatering system.

40.14.6 SYSTEM REMOVAL

The Contractor shall remove all dewatering equipment and temporary electrical service from the site. All wells shall be removed or cut off a minimum of three (3) feet below the final ground surface and capped. Holes left from pulling wells or wells that are capped shall be grouted in a manner approved by the Engineer.

40.14.7 PAYMENTS

No additional or separate payment will be made for any work described herein. The costs for all labor, materials, equipment, permit fees, samples, tests, reports, services and insurance required or necessary to perform all the work described herein shall be deemed included in the price bid for all items of work.

(6) Refer to Page IV-34:
Add the following new Section 40.15:

(7) **Refer** to **Subsection 71.41.4 - Specific Pavement Restoration Provisions**, Page VII-67:
Add the following to **Subsection 71.41.4**:

(E) Specific Pavement Restoration Provisions:

(1) Within the limits of the highway reconstruction the restoration shall be accomplished and paid for in accordance with Highway Construction Plans, Details and Specifications.

(2) In street areas requiring sewer and water main work the restoration shall be as follows:

(A) The following streets require 2" Overlay:

- **Cross Island Parkway West Service Road between Station 12+00 and 23+50.**
- **87th Avenue between Station 11+00 and 21+00.**
- **239th Street between Station 10+50 and 12+75.**
- **89th Avenue between Station 15+00 and 14+50**
- **88th Drive between Station 14+00 and 14+30**
- **88th Road between Station 13+90 and 13+50**

- **88th Avenue between Station 13+55 and 13+00**
- **241st Street 20' north from the north building line.**

(a) The permanent restoration over the **trench width and cutbacks only** shall consist of a top course of a minimum of three (3) inches of binder mixture on a base course of a minimum of six (6) inches of concrete, to match the existing pavement as directed by the Engineer.

(b) Finally an overlay of two (2) inches of asphaltic concrete wearing course shall be installed over the entire width of the roadway from **curb to curb** or **edge to edge** of existing roadway.

(B) In all other street segments requiring water main work only, the restoration shall be as follows:

(a) The permanent restoration over the **trench width and cutbacks only** shall consist of a top course of one and one-half (1-1/2) inches of asphaltic concrete wearing course on a base course of a minimum of four and one-half (4-1/2) inches of binder mixture, or a top course of one and one-half (1-1/2) inches of asphaltic concrete wearing course on a minimum of one and one-half (1-1/2) inches of binder mixture on a base course of a minimum of six (6) inches of concrete, to match the existing pavement as directed by the Engineer.

(3) The following requirements apply:

(a) Before the top course is installed, an additional width of asphalt beyond the edge of new base course shall be saw-cut and removed from all edges of trenches to a depth to accommodate the specified top course and the entire area restored. This additional removal shall be in accordance with paragraph (b) below.

(b) Pavement excavation along with saw cutting of pavements for sewer and water main trenches shall be in accordance with **Section 71.21 - Pavement Excavation** of the Standard Sewer And Water Main Specifications.

(c) At locations requiring the installation of a concrete base course, a reflective cracking membrane shall be installed over joints prior to restoration, the cost of which shall be deemed included in the prices bid for all pavement restoration items. Additionally, appropriate pavement keys as described below shall be used.

(d) Pavement keys **Type B-1** shall be used to insure a desired four (4) inch curb reveal (two and one-half (2-1/2) inch absolute minimum). Pavement key **Type A** shall be used in all intersections. Both keys are to be per Bureau of Highways Operations Specifications and Standard Details of Construction.

(e) Unless otherwise specified, the cost for Proctor analyses, in-place soil density tests, tack coating, eradication of temporary roadway markings, stripping or milling of pavement keys and adjustment of city-owned castings for all roadway work shall be deemed included in the prices bid for all pavement restoration items.

(f) Payment for placement of temporary pavement marking shall be made under Item No. 6.49 - TEMPORARY PAVEMENT MARKINGS (4" WIDE).

(g) Payment for removal of existing pavement markings shall be made under Item No. 6.53 - REMOVE EXISTING LANE MARKINGS (4"WIDE).

(h) Payment for placement of permanent pavement marking with thermoplastic reflectorized pavement markings (crosswalk and lane dividers) shall be made under Item No. 6.44 - THERMOPLASTIC REFLECTORIZED PAVEMENT MARKINGS (4" WIDE).

(i) Payment for pavement restoration shall be made under the following items:

Item No.	Item	Payment Description
4.02 AB-R	Asphaltic Concrete Wearing Course, 1-1/2" Thick	(For asphaltic concrete wearing course top course when no overlay is required.)
4.02 AF-R	Asphaltic Concrete Wearing Course, 2" Thick.	(For 2" asphaltic concrete wearing course overlay from curb to curb or edge to edge.)
4.02 CA	Binder Mixture	(For binder mixture base course over trenches and cutbacks; binder mixture top course when overlay is required; binder mixture in Type A and B Keys; and binder mixture to fill in roadway depressions and to provide a leveling course prior to overlay where ordered.)
4.04 H	Concrete Base For Pavement, Variable Thickness For Trench Restoration, (High-Early Strength)	(For concrete base course over trenches and cutbacks.)

END OF SECTION

This Section consists of thirteen (13) pages plus six (6) pages of attachments.

(NO TEXT THIS PAGE)

NEW YORK CITY DOT

Department of Transportation

POLLY TROTTENBERG, Commissioner

OCMC TRAFFIC STIPULATIONS

MARCH 14, 2017

OCMC FILE NO: QEC-17-174
CONTRACT NO: SEQ200531
PROJECT: CONSTRUCTION OF STORM AND SANITARY SEWERS IN 239 STREET, ETC.

LOCATION(S): QUEENS

PERMISSION IS HEREBY GRANTED TO THE **NYCDDC** AND ITS DULY AUTHORIZED AGENT, TO ENTER UPON AND RESTRICT THE FLOW OF TRAFFIC AT THE ABOVE LOCATION(S) FOR THE PURPOSE OF CARRYING OUT THE ABOVE NOTED PROJECT, SUBJECT TO THE STIPULATIONS, AS NOTED BELOW:

SPECIAL STIPULATIONS

A. **EMBARGOES** – A CONSTRUCTION EMBARGO WILL APPLY TO THOSE LOCATIONS BELOW WHICH FALL WITHIN THE **HOLIDAY EMBARGO** OR ANY OTHER SPECIAL EVENT EMBARGOES PUBLISHED BY THE BUREAU OF PERMIT MANAGEMENT AND CONSTRUCTION CONTROL.

B. **BIKE LANES** – IF WORK IS IN OR AFFECTING A BIKE LANE, THE PERMITTEE MUST POST ADVANCE WARNING SIGNS 350 FEET AND 200 FEET PRIOR TO THE WORK ZONE STATING **"CONSTRUCTION IN BIKE LANE AHEAD PROCEED WITH CAUTION"**, AND ALSO POST A SIGN AT THE WORK ZONE STATING **"CONSTRUCTION IN BIKE LANE PROCEED WITH CAUTION"**. SUCH SIGNS SHALL BE ORANGE, 3' X 3', DIAMOND-SHAPED WITH 4" BLACK LETTERING. SIGNS SHALL BE POSTED IN ACCORDANCE WITH THE FEDERAL MANUAL ON UNIFORM TRAFFIC CONTROL DEVICES (MUTCD).

C. **BIKE SHARE STATIONS:** THE PERMITTEE SHALL NOT REMOVE, RELOCATE, DAMAGE OR DISRUPT THE OPERATION OF EXISTING BIKE SHARE STATIONS WITHOUT FIRST CONTACTING NYC BIKE SHARE A123 ST 855-245-3311 FOR THEIR REQUIREMENTS PRIOR TO COMMENCING WORK.

D. **CITYBENCH:** THE PERMITTEE SHALL NOT REMOVE, RELOCATE, DAMAGE OR DISRUPT AN EXISTING CITYBENCH WITHOUT FIRST CONTACTING NYC DOT AT 212-839-6569, OR VIA EMAIL AT CITYBENCH@DOT.NYC.GOV PRIOR TO COMMENCING WORK.

E. **PROTECTION OF NYC DEP GREEN INFRASTRUCTURE:** THE PERMITTEE SHALL TAKE PRECAUTION OF NYC DEP GREEN INFRASTRUCTURE IN THE RIGHT-OF-WAY. THE PERMITTEE MUST PROTECT NYC DEP GREEN INFRASTRUCTURE DOWNSTREAM OF THE WORK OR WITHIN FIVE (5) FEET OF THE WORK AREA. THE PERMITTEE MUST EMAIL NYC DEP AT SUSTAINABILITY@DEP.NYC.GOV FOR PROTECTION REQUIREMENTS PRIOR TO COMMENCING WORK. THE PERMITTEE IS RESPONSIBLE FOR RESTORATION OF DAMAGED NYC DEP INFRASTRUCTURE AS DIRECTED BY NYC DEP.

F. **BUS STOPS** – THE PERMITTEE SHALL PROVIDE WRITTEN NOTICE TO NYC DOT OCMC AND NEW YORK CITY TRANSIT (NYCT) A MINIMUM OF FIVE (5) WEEKS IN ADVANCE FOR LANE/STREET CLOSURES THAT AFFECT BUS ROUTES/BUS STOPS.

G. **STREET LIGHTS / TRAFFIC SIGNALS:** THE PERMITTEE SHALL NOT REMOVE OR RELOCATE EXISTING STREET LIGHTS OR TRAFFIC SIGNALS WITHOUT FIRST OBTAINING APPROVAL FROM NYCDOT STREET LIGHTING / TRAFFIC SIGNALS UNIT.

H. **TRAFFIC CAMERAS, DETECTION/COMMUNICATION EQUIPMENT:** IF AT ANY TIME DURING THE APPROVED WORK, THE PERMITTEE ENCOUNTERS TRAFFIC SURVEILLANCE CAMERAS, DETECTION EQUIPMENT OR ANY TYPE OF COMMUNICATION EQUIPMENT (WIRELESS OR HARD-WIRED) ON ANY NYC DOT FACILITY, THAT IS NOT INCLUDED ON THE DESIGN/BUILD DRAWINGS, THE PERMITTEE SHALL IMMEDIATELY NOTIFY NYC DOT TRAFFIC MANAGEMENT BY PHONE AT 718-433-3390 OR 718-433-3340 AND VIA EMAIL AT TMC@DOT.NYC.GOV AND AWAIT DIRECTION PRIOR TO CONTINUING WORK.

I. **METERS** – THE PERMITTEE SHALL NOT REMOVE OR RELOCATE PARKING METERS WITHOUT FIRST OBTAINING APPROVAL FROM NYCDOT PARKING METER DIVISION AT 718 – 894 – 8651.

J. **TEST PITS** – THE BELOW TRAFFIC STIPULATIONS DO NOT APPLY TO TEST PIT WORK RELATED TO THIS CONTRACT. WORK HOURS AND OTHER REQUIREMENTS FOR TEST PIT OPERATIONS MAY DIFFER FROM THE STIPULATIONS IDENTIFIED BELOW. THE PERMITTEE SHALL BE REQUIRED TO OBTAIN SEPARATE PERMITS RELATED TO TEST PITS.

K. **TEMPORARY PARKING REGULATIONS/PAVEMENT MARKINGS** – THE PERMITTEE IS REQUIRED TO INSTALL, MAINTAIN AND REMOVE ALL NECESSARY TEMPORARY PARKING AND REGULATORY SIGNS AND PAVEMENT MARKINGS, AND RESTORE THEIR ORIGINAL CONDITION PER NYC DOT STANDARDS, PRIOR TO EXPIRATION OF THEIR PERMITS. THE PERMITTEE OR AGENCY PERFORMING PUBLIC OUTREACH SHALL POST AND MAINTAIN ADVISORY SIGNS A MINIMUM OF 48 HOURS PRIOR TO CHANGING EXISTING PARKING REGULATION SIGNS TO APPROVED TEMPORARY CONSTRUCTION PARKING REGULATION SIGNS. THE ADVISORY SIGNS SHOULD BE POSTED ON ALL POLES AND DRIVE RAILS ON THE SEGMENT AFFECTED, INDICATING THE DATE OF THE CHANGE, THE NEW REGULATIONS AND A TELEPHONE NUMBER TO OBTAIN MORE INFORMATION.

L. **ACCESS TO ABUTTING PROPERTIES** – THE PERMITTEE SHALL COORDINATE ALL ACTIVITIES WITH ABUTTING PROPERTY OWNERS TO ENSURE ACCESS IS PROVIDED TO/FROM ENTRANCES/DRIVEWAYS AT ALL TIMES.

M. **AUTHORIZED PARKING** – PRIOR TO PERFORMING WORK WHICH IMPACTS AUTHORIZED PARKING, THE PERMITTEE SHALL SUBMIT IN WRITING, AND COPY OCMC-STREETS, A REQUEST TO OCCUPY SPACE CURRENTLY USED BY AUTHORIZED VEHICLES. APPROVAL MUST BE RECEIVED FROM AUTHORIZED PARKING PRIOR TO OCCUPYING THESE AREAS.

NYC Department of Transportation
Bureau of Permit Management and Construction Control
Water Street - 7th Floor, New York, NY 10041
T: 212.839.9621 F: 212.839.8970
www.nyc.gov/dot

N. **NOTIFICATION** – THE PERMITTEE MUST AT LEAST TWO (2) WORKING DAYS BEFORE THE START OF CONSTRUCTION NOTIFY THE NYC FIRE DEPARTMENT, NYC POLICE DEPARTMENT, NYCEMS, LOCAL COMMUNITY BOARD, BOROUGH PRESIDENT'S OFFICE-CHIEF ENGINEER, NYCDOT OCMC OFFICE, AND ALL ABUTTING PROPERTY OWNERS.

O. **CONSTRUCTION INFORMATIONAL SIGNS** – THIS PROJECT REQUIRES A CONSTRUCTION PROJECT INFORMATIONAL SIGN (CPIS) IN ACCORDANCE WITH NYCDOT HIGHWAY RULE SECTION 2-02 (4) AND (5). CRITERIA AND A PROTOTYPE FOR THIS SIGN MAY BE FOUND ON THE NYCDOT WEBSITE AT:

HTTP://WWW.NYC.GOV/HTML/DOT/DOWNLOADS/PDF/DOT_CPIS_DIRECTIONS.PDF

P. **ENHANCED MITIGATIONS**

- **ENHANCED MITIGATIONS FOR PEDESTRIAN FLOW**, INCLUDING METAL FENCING, SHALL BE PROVIDED TO ENSURE PEDESTRIANS STAY WITHIN THEIR DESIGNATED PATH/ROUTE. PEDESTRIAN MANAGERS SHALL BE PROVIDED TO ASSIST WITH PEDESTRIANS AT THE DESIGNATED CROSSWALK AREAS.
- **"NO STANDING ANYTIME-TEMPORARY CONSTRUCTION" SIGNS** AND TEMPORARY PAVEMENT MARKINGS SHALL BE INSTALLED AND MAINTAINED AS WARRANTED BY THE MAINTENANCE AND PROTECTION OF TRAFFIC (MPT) REQUIRED TO FACILITATE TRAFFIC MOVEMENTS THROUGH THE WORK ZONE. ALL TEMPORARY SIGNS AND PAVEMENT MARKINGS SHALL BE REMOVED UPON COMPLETION OF THE PROJECT.
- **COMMUNITY OUTREACH** SHALL BE PROVIDED FOR THE DURATION OF THE PROJECT.

I. MAINTENANCE AND PROTECTION OF TRAFFIC

1. CROSS ISLAND PARKWAY WEST SERVICE ROADWAY BETWEEN 91 AVENUE AND 90 AVENUE

1. Work hours shall be as follows: 9am to 4pm Monday through Friday and 8am to 4pm on Saturday.
2. During work hours, the permittee shall maintain one 11 foot travel lane for traffic. Do not block the access lane to the main expressway.
3. After work hours the permittee shall maintain two 11 foot lanes for traffic.
4. The permittee shall maintain a minimum of 5 feet wide sidewalk or 5 feet wide protected pedestrian walkway in the roadway at all times.

2. CROSS ISLAND PARKWAY WEST SERVICE ROADWAY BETWEEN 90 AVENUE AND 88 AVENUE

1. Work hours shall be as follows: 9am to 4pm Monday through Friday and 8am to 4pm on Saturday.
2. During work hours, the permittee shall maintain one 11 foot travel lane for traffic.
3. After work hours the permittee shall maintain one 11 foot lane for traffic.
4. The permittee shall maintain a minimum of 5 feet wide sidewalk or 5 feet wide protected pedestrian walkway in the roadway at all times.
5. The permittee must coordinate with St. Gregory the Great Church prior to mobilizing.

3. CROSS ISLAND PARKWAY WEST SERVICE ROADWAY BETWEEN 88 AVENUE AND 86 ROAD

1. Work hours shall be as follows: 9am to 4pm Monday through Friday and 8am to 4pm on Saturday.
2. During work hours, the permittee shall maintain one 11 foot travel lane for traffic.
3. After work hours the permittee shall maintain two 11 foot lanes for traffic.
4. The permittee shall maintain a minimum of 5 feet wide sidewalk or 5 feet wide protected pedestrian walkway in the roadway at all times.
5. The permittee must coordinate with St. Gregory the Great Church prior to mobilizing.

4. 242 STREET BETWEEN 90 AVENUE AND 88 AVENUE

5. 241 STREET BETWEEN 87 AVENUE AND 86 ROAD

6. 90 AVENUE BETWEEN CROSS ISLAND PARKWAY WEST SERVICE ROADWAY AND 242 STREET

7. 89 AVENUE BETWEEN CROSS ISLAND PARKWAY WEST SERVICE ROADWAY AND 241 STREET

8. 88 DRIVE BETWEEN CROSS ISLAND PARKWAY WEST SERVICE ROADWAY AND 242 STREET

1. Work hours shall be as follows: 7am to 6pm Monday through Friday.
2. During work hours, the permittee shall maintain one 12 foot lane for local and emergency access.
3. After sewer work hours:
   a. The Permittee shall maintain one 12 foot lane for local and emergency access. In areas where the roadway is not wide enough to allow for local and emergency traffic, the Permittee's work shall not

exceed one hundred (100) linear feet, so that the NYC Fire Department/EMS and the NYC Police Department can have access to the local residents on the affected street segment. The work area shall include the excavated trench, equipment and stored materials necessary for the work.

b. It will be the Permittee's responsibility to inform the NYC Fire Department/EMS, NYC Police Department and local Community Board daily, in writing, including the location of the work area and the layout of the emergency access from either side of the work area. This notification shall be specific by the house number where possible. Representatives of the local NY Fire Battalion, NYC Police Department and the local Community Board shall sign such notice daily.

4. After water main work hours the permittee shall maintain two lanes for traffic with one lane in each direction.
5. The permittee shall maintain a minimum of 5 feet wide sidewalk or 5 feet wide protected pedestrian walkway in the roadway at all times.

9. **88 ROAD BETWEEN CROSS ISLAND PARKWAY WEST SERVICE ROADWAY AND 242 STREET**

10. **88 AVENUE BETWEEN CROSS ISLAND PARKWAY WEST SERVICE ROADWAY AND 242 STREET**

11. **87 AVENUE BETWEEN CROSS ISLAND PARKWAY WEST SERVICE ROADWAY AND END**

1. Work hours shall be as follows: 7am to 6pm Monday through Friday.
2. During work hours, the permittee shall maintain one 12 foot lane for local and emergency access.
3. After sewer work hours:
   a. The Permittee shall maintain one 12 foot lane for local and emergency access. In areas where the roadway is not wide enough to allow for local and emergency traffic, the Permittee's work shall not exceed one hundred (100) linear feet, so that the NYC Fire Department/EMS and the NYC Police Department can have access to the local residents on the affected street segment. The work area shall include the excavated trench, equipment and stored materials necessary for the work.
   b. It will be the Permittee's responsibility to inform the NYC Fire Department/EMS, NYC Police Department and local Community Board daily, in writing, including the location of the work area and the layout of the emergency access from either side of the work area. This notification shall be specific by the house number where possible. Representatives of the local NY Fire Battalion, NYC Police Department and the local Community Board shall sign such notice daily.
4. After water main work hours the permittee shall maintain two lanes for traffic with one lane in each direction.
5. The permittee shall maintain a minimum of 5 feet wide sidewalk or 5 feet wide protected pedestrian walkway in the roadway at all times.
6. The permittee must coordinate with St. Gregory the Great Church prior to mobilizing.

12. **239 STREET BETWEEN END AND 86 AVENUE**

1. Work hours shall be as follows: 7am to 6pm Monday through Friday.
2. During work hours, the permittee shall maintain one 11 foot lane for two-way through traffic with flaggers at each end of the work zone. Work on one side of the center median at a time.
3. After work hours, the permittee shall maintain two lanes for traffic with one lane in each direction.
4. The permittee shall maintain a minimum of 5 feet wide sidewalk or 5 feet wide protected pedestrian walkway in the roadway at all times.

13. **CROSS ISLAND PARKWAY WEST SERVICE ROADWAY AND 90 AVENUE**

1. Work hours shall be as follows: 9am to 4pm Monday through Friday and Saturday 8am to 4pm.
2. During work hours the permittee shall maintain one 11 foot lane for traffic on Cross Island Parkway West Service roadway south of 90 Avenue, one 11 foot lane for traffic north of 90 Avenue, and maintain one 12 foot lane for local and emergency access on 90 Avenue. Do not block the access lane to the main expressway.
3. After work hours the permittee shall maintain two 11 foot lanes for traffic on Cross Island Parkway West Service Roadway south of 90 Avenue, one 11 foot lane for traffic north of 90 Avenue, and maintain two lanes for traffic with one lane in each direction on 90 Avenue. Do not block the access lane to the main expressway.

14. **CROSS ISLAND PARKWAY WEST SERVICE ROADWAY AND 89 AVENUE**
15. **CROSS ISLAND PARKWAY WEST SERVICE ROADWAY AND 88 DRIVE**
16. **CROSS ISLAND PARKWAY WEST SERVICE ROADWAY AND 88 ROAD**
17. **CROSS ISLAND PARKWAY WEST SERVICE ROADWAY AND 88 AVENUE**

1. Work hours shall be as follows: 9am to 4pm Monday through Friday and Saturday 8am to 4pm.
2. During work hours the permittee shall maintain one 11 foot lane for traffic on Cross Island Parkway West Service roadway and maintain one 12 foot lane for local and emergency access on the cross street.
3. After work hours the permittee shall maintain one 11 foot lane for traffic on Cross Island Parkway West Service roadway and maintain two lanes for traffic with one lane in each direction on the cross street.

18. **CROSS ISLAND PARKWAY WEST SERVICE ROADWAY AND 87 AVENUE**

1. Work hours shall be as follows: 9am to 4pm Monday through Friday and Saturday 8am to 4pm.
2. During work hours the permittee shall maintain one 11 foot lane for traffic on Cross Island Parkway West Service roadway and maintain one 12 foot lane for local and emergency access on the cross street.
3. After work hours the permittee shall maintain two 11 foot lanes for traffic on Cross Island Parkway West Service roadway and maintain two lanes for traffic with one lane in each direction on 87 Avenue.

19. **242 STREET AND 89 AVENUE**
20. **242 STREET AND 88 DRIVE**
21. **242 STREET AND 88 ROAD**

1. Work hours shall be as follows: 9am to 4pm Monday through Friday and Saturday 8am to 4pm.
2. During work hours the permittee shall maintain one 12 foot lane for local and emergency access on both streets.
3. After work hours the permittee shall maintain two lanes for traffic with one lane in each direction on both streets.

22. **242 STREET AND 88 AVENUE**

1. Work hours shall be as follows: 9am to 4pm Monday through Friday and Saturday 8am to 4pm.
2. During work hours the permittee shall maintain one 12 foot lane for local and emergency access on 242 Street and on 88 Avenue east of 242 Street. Maintain two lanes for traffic with one lane in each direction on 88 Avenue west of 242 Street.
3. After work hours the permittee shall maintain two lanes for traffic with one lane in each direction on both streets.

23. **87 AVENUE AND 241 STREET**

1. Work hours shall be as follows: 9am to 4pm Monday through Friday and Saturday 8am to 4pm.
2. During work hours the permittee shall maintain one 12 foot lane for local and emergency access on both streets.
3. After work hours the permittee shall maintain two lanes for traffic with one lane in each direction on both streets.

24. **87 AVENUE AND 239 STREET**

1. Work hours shall be as follows: 9am to 4pm Monday through Friday and Saturday 8am to 4pm.
2. During work hours the permittee shall maintain one 12 foot lane for local and emergency access 87 Avenue and one 11 foot lane for two-way through traffic with flaggers at each end of the work zone on 239 Street.
3. After work hours the permittee shall maintain two lanes for traffic with one lane in each direction on both streets.

II. GENERAL NOTES

A. **THIS IS NOT A PERMIT**. THIS STIPULATION SHEET MUST BE SUBMITTED WITH ALL REQUESTS FOR PERMITS PERTAINING TO THE ABOVE CONTRACT AND PRESENT AT THE WORK SITE ALONG WITH ALL ACTIVE CONSTRUCTION PERMITS WHEN THE APPROVED WORK IS BEING PERFORMED.

B. THE PERMITTEE MUST COMPLY WITH ALL CONSTRUCTION EMBARGOS ISSUED BY THE NYCDOT INCLUDING THE HOLIDAY EMBARGO.

C. THE PERMITTEE SHALL COMPLY WITH ALL REQUIREMENTS OF THE NYCDOT SPECIAL EVENTS UNIT AS IDENTIFIED BELOW:

1. STREET FAIRS / FESTIVALS

- ALL EXCAVATIONS MUST BE PLATED WITH SKID RESISTANT PLATES.
- PLATES MUST BE RECESSED AND FLUSH WITH PAVEMENT.
- ALL PAVEMENT DEFECTS MUST BE CORRECTED WITHIN OR ADJACENT TO THE WORK ZONE.
- THE CONTRACTOR IS RESPONSIBLE FOR ANY DEFECTS WITHIN THE IMMEDIATE VICINITY IF NYCDOT STREET & ARTERIAL MAINTENANCE CANNOT MAKE REPAIRS DUE TO PROJECT INTERFERENCE (AS DETERMINED BY NYCDOT).
- ALL EQUIPMENT, TRAILERS AND MATERIAL STORAGE MUST BE REMOVED.

2. RUNNING / WALKING / BIKING EVENTS

- ALL EXCAVATIONS MUST BE BACKFILLED AND PAVED OR PLATES MUST BE RECESSED AND PAVED OVER FLUSH WITH PAVEMENT.
- ALL PAVEMENT DEFECTS MUST BE CORRECTED WITHIN OR ADJACENT TO THE WORK ZONE.
- THE CONTRACTOR IS RESPONSIBLE FOR ANY DEFECTS WITHIN THE IMMEDIATE VICINITY IF NYCDOT STREET & ARTERIAL MAINTENANCE CANNOT MAKE REPAIRS DUE TO PROJECT INTERFERENCE (AS DETERMINED BY NYCDOT).
- ALL EQUIPMENT, TRAILERS AND MATERIAL STORAGE MUST BE REMOVED.

3. PARADES

- ALL EXCAVATIONS MUST BE BACKFILLED AND PAVED OR PLATES MUST BE RECESSED AND PAVED OVER FLUSH WITH PAVEMENT.
- FORMATION AND DISPERSAL AREA PLATES MUST BE RECESSED AND FLUSH WITH PAVEMENT (PLATES MUST BE SKID RESISTANT).
- ALL PAVEMENT DEFECTS MUST BE CORRECTED WITHIN OR ADJACENT TO THE WORK ZONE.
- THE CONTRACTOR IS RESPONSIBLE FOR ANY DEFECTS WITHIN THE IMMEDIATE VICINITY IF NYCDOT STREET & ARTERIAL MAINTENANCE CANNOT MAKE REPAIRS DUE TO PROJECT INTERFERENCE (AS DETERMINED BY NYCDOT).
- ALL EQUIPMENT, TRAILERS AND MATERIAL STORAGE MUST BE REMOVED.

4. MAYORAL EVENTS

- ALL EXCAVATIONS MUST BE BACKFILLED AND PAVED OR PLATES MUST BE RECESSED AND PAVED OVER FLUSH WITH PAVEMENT.
- ALL PAVEMENT DEFECTS MUST BE CORRECTED WITHIN OR ADJACENT TO THE WORK ZONE.
- THE CONTRACTOR IS RESPONSIBLE FOR ANY DEFECTS WITHIN THE IMMEDIATE VICINITY IF NYCDOT STREET & ARTERIAL MAINTENANCE CANNOT MAKE REPAIRS DUE TO PROJECT INTERFERENCE (AS DETERMINED BY NYCDOT).
- ALL EQUIPMENT, TRAILERS AND MATERIAL STORAGE MUST BE REMOVED.

D. ALL RELOCATION WORK BY THE UTILITIES SUCH AS; CON EDISON, TELEPHONE, GAS AND CABLE COMPANIES SHALL PRECEDE THE CONTRACTORS' START OF WORK ON ALL AFFECTED ROADWAYS IN THE IMPACTED CONTRACT AREA.

E. THE CONTRACTOR IS ADVISED THAT OTHER CONTRACTORS MAY BE WORKING IN THE GENERAL AREA DURING THE TERM OF THIS STIPULATION. IN WHICH EVENT, THE CONTRACTOR MAY REQUIRE MODIFICATIONS BY THE OCMC-STREETS.

F. THE PERMITTEE IS NOT AUTHORIZED TO ENTER, OCCUPY OR USE ANY PUBLICLY-OWNED OR PRIVATELY OWNED, NON-PAVED, LANDSCAPE OR NON-LANDSCAPED LOCATION WITHOUT SPECIFIC WRITTEN PERMISSION. WHEN THE LOCATION IS WITHIN THE RIGHT-OF-WAY OF A LIMITED-ACCESS ARTERIAL HIGHWAY, **WRITTEN** APPROVAL FROM THE NYCDOT OCMC-HIGHWAYS IS REQUIRED. WHEN THE LOCATION IS WITHIN THE RIGHT-OF-WAY OF A PUBLIC STREET OR PUBLIC PARK, **WRITTEN** APPROVAL FROM THE NEW YORK CITY DEPARTMENT OF TRANSPORTATION OR NEW YORK CITY DEPARTMENT OF PARKS AND RECREATION IS REQUIRED. WHEN THE LOCATION IS WITHIN THE RIGHT-OF-WAY OF ANY OTHER JURISDICTION SUCH AS PRIVATE PROPERTY, STATE, FEDERAL ETC., IT IS THE PERMITTEE'S RESPONSIBILITY TO DETERMINE THE PROPERTY OWNER AND OBTAIN THE WRITTEN APPROVAL.

G. THE PERMITTEE SHALL ADHERE TO THE NYCDOT BUREAU OF BRIDGES' SPECIAL PROVISIONS FOR LANDSCAPE PROTECTION, MAINTENANCE AND RESTORATION, ITEMS 1.18.15 THROUGH 1.18.19, WHENEVER AND WHEREVER ANY OF THE PERMITTEE'S ACTIVITIES OCCUR WITHIN A LIMITED ACCESS ARTERIAL HIGHWAY RIGHT - OF - WAY.

H. NO DEVIATION OR DEPARTURE FROM THESE STIPULATIONS WILL BE PERMITTED WITHOUT THE PRIOR WRITTEN APPROVAL FROM THE OCMC-STREETS. REQUEST FOR SUCH MODIFICATIONS SHALL BE SUBMITTED TO THE OFFICE OF THE OCMC-STREETS, NEW YORK CITY DEPARTMENT OF TRANSPORTATION, A MINIMUM OF TWENTY (20) DAYS IN ADVANCE FOR CONSIDERATION.

I. FOR ANY CONSTRUCTION ACTIVITY RESULTING IN THE FULL CLOSURE OF A ROADWAY FOR MORE THAN 180 CONSECUTIVE CALENDAR DAYS, THE CONTRACTOR MUST PRODUCE AND SUBMIT A COMMUNITY REASSESSMENT, IMPACT AND AMELIORATION (CRIA) STATEMENT TO NYCDOT PLANNING AND OBTAIN THEIR APPROVAL BEFORE APPLYING FOR PERMITS, IN COMPLIANCE WITH THE PROVISIONS OF **LOCAL LAW 24 STREET CLOSURE LAW.**

J. FOR THIS PROJECT THE CONTRACTOR SHALL FURNISH, INSTALL AND MAINTAIN ALL NECESSARY ADVANCE WARNING AND DETOUR SIGNS, TEMPORARY CONTROL DEVICES, BARRICADES, LIGHTS AND FLASHING ARROW BOARDS IN ACCORDANCE WITH THE "MANUAL ON UNIFORM TRAFFIC CONTROL DEVICES," THE TYPICAL SCHEMES INCLUDED IN THIS SPECIFICATION; AND AS ORDERED BY THE ENGINEER-IN-CHARGE AND THE OCMC-STREETS.

K. THE CONTRACTOR SHALL BE RESPONSIBLE FOR IDENTIFYING HIS CONSTRUCTION SIGNAGE. THE IDENTIFICATION SHALL INCLUDE THE CONTRACTOR'S NAME, SPONSORING AGENCY NAME AND THE CONTRACT NUMBER. THE IDENTIFICATION SHALL BE PLACED ON THE BACK OF THE SIGN. THE LETTERING SHALL BE THREE (3) INCHES HIGH.

L. THE OCMC-STREETS RESERVES THE RIGHT TO VOID OR MODIFY THESE STIPULATIONS SHOULD CONSTRUCTION FAIL TO COMMENCE WITHIN TWO (2) YEARS OF THE SIGNED DATE OF THESE STIPULATIONS.

DUANE BARRA
DIRECTOR
OCMC-STREETS

STEPHEN PINKUS
PROJECT MANAGER
OCMC-STREETS

EP7 - PAGES

GAS COST SHARING (EP-7) STANDARD SPECIFICATIONS

NOTICE

THE PAGES CONTAINED IN THIS SECTION (EP7-PAGES) REPRESENT THE GAS COST SHARING WORK THAT SHALL APPLY TO AND BECOME A PART OF THE CONTRACT.

(NO TEXT ON THIS PAGE)

TABLE OF CONTENT

I - NOTICE TO ALL BIDDERS; GAS COST SHARING WORK

II - GENERAL PROVISIONS; GAS COST SHARING WORK

1. General
2. Gas Interferences And Accommodations
   2a. Water Main Accommodations
   2b. Sewer Accommodations
3. Quantity Overruns, EP-7 Funded Bid Items
4. Changes And Extra Work
5. Excavation
6. Backfilling And Street Restoration
7. Non-Responsive Bids
8. Minimum Clearances
9. Work By Facility Operator
10. Materials Furnished By Facility Operator
11. Liability And Insurance
12. Width And Depth Of Excavation
13. Depth And Crossing Angles Of Gas Facilities
14. Maintenance Of Traffic For Gas Work
15. Relocated Gas And Temporary Systems Installation
16. Role Of Company Inspector
17. Coordination With Gas Company

III - TECHNICAL SECTION

SECTION 6.01 - Trench Crossings; Support And Protection Of Gas Facilities And Services.
SECTION 6.02 - Extra Excavation For The Installation Of Catch Basin Sewer Drain Pipes With Gas Interferences.
SECTION 6.02.1 - Extra Excavation For The Installation Of Catch Basin Sewer Drain Pipes With Upstream Inverts Greater Than Six (6) Feet.
SECTION 6.03 - Removal Of Abandoned Gas Facilities. All Sizes.
SECTION 6.03.1 - Removal Of Abandoned Gas Facilities With Possible Coal Tar Wrap. All Sizes. (For National Grid Work Only)
SECTION 6.03.1a - Removal Of Abandoned Gas Facilities With Possible Coal Tar Wrap. All Sizes. (For Con Edison Work Only)
SECTION 6.04 - Adjust Hardware To Grade Using Spacer Rings/Adaptors. (Street Repaving.)
SECTION 6.05 - Adjust Hardware To Grade By Resetting. (Road Reconstruction.)
SECTION 6.06 - Special Care Excavation And Backfilling.
SECTION 6.07 - Test Pits For Gas Facilities.
SECTION 6.09 - Trench Excavation and Backfill for New Gas Mains and Services (For National Grid Work Only)
SECTION 6.09a - Trench Excavation and Backfill for New Gas Mains and Services (For Con Edison Work Only)

IV - STANDARD SKETCHES; GAS COST SHARING WORK

NO. 1 - Support Requirements For Gas Mains And Services Crossing Excavation Greater Than 4'-0" Wide At Any Angle
NO. 1A - Support Requirements For Gas Mains Over 16" Diameter Up To And Including 48" Diameter Crossing Excavation At Any Angle
NO. 2 - Typical Methods Of Measurement For Gas Crossings
NO. 3 - Utility Crossings During Catch Basin Chute Connection Pipe Installation
NO. 4 - Utility Crossings During Catch Basin Chute Connection Pipe Installation (Extra Depth)
NO. 5 - Gas Main Encroachment On And/Or Parallel To Excavation Of Unsheeted Trench

V - PRELIMINARY GAS WORK TO BE PERFORMED BY FACILITY OPERATOR

VI - LISTING OF APPROXIMATE LOCATIONS OF EP-7 BID ITEMS QUANTITIES

I - NOTICE TO ALL BIDDERS; GAS COST SHARING WORK

All prospective bidders are hereby advised that, pursuant to the "Gas Facility Cost Allocation Act", ("the Act"), the City of New York has entered into an agreement ("the Agreement") with the gas companies (Con Edison or National Grid (formerly KeySpan Energy Delivery)) operating in their respective areas of the City to "share" the cost of facility relocation and/or support and protection of facilities disturbed by proposed water and/or sewer and related City work specified in this contract. Therefore, bid items, specifications and estimated quantities for the incremental costs of support and protection of certain gas facilities have been included in this contract. The low bid for this contract shall be determined by examining each bid for all work to be performed under this contract including any work of support and protection of gas facilities to be performed. The Contractor shall not seek additional compensation from gas companies except as specifically set forth in its contract.

II - GENERAL PROVISIONS; GAS COST SHARING WORK

1. General:

The Contractor shall perform City work with interferences from existing live and abandoned gas facilities. This shall be defined as utility work. Therefore, this contract includes bid items, specifications and estimated quantities designed to fully compensate him/her for the incremental costs of supporting, protecting, providing accommodations and, avoiding disturbing gas facilities located in the streets shown on the contract drawings. In the event that any other provisions of this contract related to gas facilities (or private utilities) conflict with these provisions, these provisions shall supersede and govern all work related to gas facilities owned by the companies operating in the project area. All utility work, as defined in these specifications, including changes and additions thereto shall be paid solely by the City except when specified otherwise in this contract. Contractor hereby agrees that the facility operator shall not be liable to pay him/her for any work performed including extra utility work. Contractor agrees that its bid prices include all compensation for loss of productivity and efficiency, idle time, delays (including any delays occasioned by negotiation of a contract change), change in operations, mobilization, demobilization, remobilization, added cost or expense, lost of profit, other damages or impact costs that may be suffered by or because of utility work, or the presence of gas facilities in the proximity of City work and that it will not seek additional compensation for these items. All disputes shall be resolved as specified in the contract.

Pursuant to the Act, Agreement, and the New York City Administrative Code, the gas company(ies) has been directed by the Commissioner and is required to perform all maintenance, repairs, replacement, shifting, alteration, relocation, and/or removal work that are not part of this contract. By having bid on this contract, the Contractor understands and agrees that the Commissioner has preasserted any right the City has to require, including the issuance of any directives or so called "order outs" under the New York City Administrative Code, any or all gas companies to maintain, repair, replace, protect, support, shift, alter, relocate, and/or remove all gas facilities that are about to be disturbed by the City contract work. The issuance of additional such directives during the performance of the contract work, where necessary in the sole judgment of the Commissioner, shall be initiated by such Commissioner as set forth in the relevant sections of the Act and Agreement. Contractor further agrees to insert such requirements as set forth herein above into any contracts with its approved subcontractors so that its subcontractors also understand and agree to such contract requirements.

2. Gas Interferences And Accommodations:

During the performance of sewer and water main work funded by the New York City Department of Environmental Protection (NYCDEP), as instructed by the Engineer, the use of any applicable contract bid item is allowed in order to resolve and accommodate all gas facilities interferences with such City work, including the removal of contaminated soil in associated trench excavation. This is in addition to the specified EP-7 bid items in the contract. Payment for such accommodation shall be funded by EP-7 bid item "UTL-GCS-2WS - GAS INTERFERENCES AND ACCOMMODATIONS" (F.S. Fixed Sum). The value of such accommodation shall be computed by multiplying the appropriate unit prices bid to the quantity of work performed, as determined by the Engineer, and applying the total amount thus to be paid

to EP-7 bid item "UTL-GCS-2WS - GAS INTERFERENCES AND ACCOMMODATIONS". When EP-7 bid item "UTL-GCS-2WS - GAS INTERFERENCES AND ACCOMMODATIONS" does not exist, such additional accommodation work shall be at no cost to the City but shall be a matter of adjustment between gas facility operator and Contractor. Private facilities, other than gas, that become in interference due to gas interferences accommodations shall also be accommodated, if so directed by the Resident Engineer, at no additional cost to the City and, provided that its owner agrees to be responsible for all additional costs to Contractor, otherwise, such facility shall be ordered by the City to be maintained, shifted, relocated or replaced by its owner at his/her expenses.

2a. Water Main Accommodations:

When water main construction is to be performed in this contract, Contractor shall be required, if warranted by field conditions, and at locations designated by the Resident or Borough Engineer, to change the vertical or horizontal alignment of water mains including but not limited to all additional labor, material, work method accommodations, furnishing, delivering and laying offset fittings and pipes, etc., necessary in order to complete water main installation and, avoid gas interferences in the project area, including street intersections. Typical work method accommodations shall include, but not be limited to, pier and plate, installation of filter fabric and select fill, etc. Such work shall be performed as directed by the Engineer and in accordance with contract specifications and latest edition of water mains standards and specifications.

2b.Sewer Accommodations:

When sewer construction is to be performed in this contract, Contractor shall be required, if warranted by field conditions, and at locations designated by the Resident or Borough Engineer, to change the horizontal alignment of sewer facilities (if possible) including but not limited to all additional labor, material, work method accommodations, furnishing, delivering and construction of additional manholes or modification of manholes/catch basins, extending chute connections, house connections, using alternate materials and methods, poured-in-place structures, etc., necessary in order to complete sewer installation and, avoid gas interferences in the project area, including street intersections. The term sewer facility shall include, but not be limited to, all sewer pipe and appurtenances, manholes, catch basins, catch basin chutes, etc. Such work shall be performed as directed by the Engineer and in accordance with contract specifications and latest edition of sewer standards and specifications.

3. Quantity Overruns, EP-7 Funded Bid Items:

No quantity overrun, in excess of one hundred twenty five (125) percent, shall be permitted for EP-7 funded bid items (gas) included in this contract, except when Resident Engineer determines that such overruns are caused by field modifications to planned City work, or approved construction methods, or contract scope changes. Overruns not paid by City shall be negotiated and paid to Contractor by gas facility operator who then shall be entitled to reimbursement by NYCDEP under established cost sharing procedures.

4. Changes And Extra Work:

This section is not applicable to work defined under "Emergency Reconstruction Contracts" or so-called "Where and When Contracts" since these projects, by definition, inherently encounter unanticipated gas facilities and cannot be pre-engineered. In all other cases, any contract changes proposed for City work shall also cover and include all associated changes to support and protection of gas facilities affected by such changes to City work. In all other cases where the Contractor finds that City work cannot be performed as planned and specified and/or, as approved because of a need to support, protect and/or alleviate interferences from gas facilities that were not listed and/or shown, or incorrectly shown in contract plans and specifications, he shall immediately notify the Resident Engineer and the facility operators' representative of his findings. Resident Engineer shall promptly examine such claims and determine whether or not such work is covered by contract bid items and /or specifications (contract bid items and specifications shall include city contract items as well as EP-7 items). The Resident Engineer shall also

examine the claim to determine if the application of EP-7 bid item "UTL-GCS-2WS - GAS INTERFERENCES AND ACCOMMODATIONS" is appropriate to resolve the claim. If upon examination, the Engineer determines that such field conditions were unanticipated (not shown and/or listed, or incorrectly shown in contract documents) and are not covered by bid items and contract specifications, he shall then direct the Contractor and the affected facility operator to negotiate the cost of supporting and protecting, and/or alleviating the impact on City work caused by such unanticipated gas facilities with each other with the understanding that the performance of City work shall continue during negotiations. If a cost agreement is reached, the Contractor and facility operator shall adjust such costs between themselves at no additional costs to the City contract. If the Contractor and affected facility operator do not reach an agreement concerning the price to be paid for the extra work within five (5) business days of the Engineer's directive to engage into such negotiations and, after considering: public safety and inconvenience, requirements of laws and regulations applicable to private utilities, integrity of all utility systems, including but not limited to sewer and water, gas, electric, telephone and, cable TV facilities, sound engineering practices, cost (long and short term) to all affected parties, and potential City work delays, then the Resident Engineer, depending on nature and severity of interferences with City work, shall either, direct the facility operator to relocate or replace its facilities at its own discretion and cost, reimbursable by NYCDEP under established gas cost sharing procedures or, direct the Contractor to perform the utility work on actual time, material and equipment costs basis pursuant to relevant contract requirements and amendments. Contract bid prices for any applicable items of work involved shall be applied, or converted to an allowance for time and material charges. Changes shall be for affected portions of utility work and, shall be processed with EP-7 funds.

5. Excavation:

All excavators shall notify the NYC/LI One Call Center at 1-800-272-4480 at least two (2) working days, not including the day of the call, but not more than ten (10) working days in advance of the start of any excavation work. The gas company(ies) will mark out its facilities within the project limits and provide Construction Inspector(s) during all excavation work in close proximity (within twelve (12) inches) to gas facilities. The Contractor shall exercise extreme caution when excavating in the vicinity of any gas facilities. Hand excavation shall be performed within twelve (12) inches of gas facilities. The Contractor prior to excavating underneath these facilities shall adequately support all gas facilities. Standard support details for gas facilities have been included in the specifications. Any damage to gas facilities shall be reported immediately to the gas company(ies). The Contractor shall be responsible for all cost associated with repairs made necessary by damages caused by his operations.

6. Backfilling And Street Restoration:

Backfilling operations and street restorations shall be in accordance with contract requirements.

7. Non-Responsive Bids:

Every gas (EP-7) bid item has a suggested "Not less than" value per unit indicated on contract bid sheet. Bids resulting in cost of less than suggested for EP-7 items are hereby prohibited and if submitted shall be considered NON-RESPONSIVE.

8. Minimum Clearances:

Clearance requirements for City work shall govern and supersede any clearance requirement of gas facility operator. Therefore, a minimum of twelve (12) inches clearance between private utilities and City water mains, sewers or related structures to be installed in this contract shall be maintained. When this clearance is not attainable, the Resident Engineer may allow a minimum of four (4) inches clearance. With less than twelve (12) inches clearance a neoprene/polyethylene shield (to be provided by facility operator) shall be installed as part of all work item specifications. However, if Resident Engineer determines that City work cannot be performed within allowable clearance and no reasonable City accommodation (no-cost change to City work) is possible, the City shall direct the facility operator to remove, relocate, shift, or alter their facility(ies) pursuant to the New York City Administrative Code.

9. Work By Facility Operator:

The facility operator may find it necessary to perform the following types of work during performance of City work: accommodating a contractor's request for gas facilities modifications (in order to facilitate City contractor's proposed construction method) or, remedial and emergency work on gas facilities proper with their own resources and materials if an approved method of construction for City work causes unanticipated disturbances to gas facilities or, replacing defective gas facilities when they are exposed by the Contractor and their actual conditions are observable by the facility operator. Also included in the above category of defective gas facilities are: the presence of environmental contaminants attributable to the gas facility in or around gas facilities. If such work is deemed required by the facility operator or if facility operator is directed by the City to address such deficiencies at any time during the course of construction, the Contractor shall modify the construction schedule at no cost to the City and allow the facility operator five (5) business days to perform such work without interferences. Additional costs to the facility operator (in cases of accommodations) or, Contractor (in cases of defective gas facilities) due to such gas work, if any, shall be the responsibility of the parties involved and not of the City. Such costs shall be a matter of adjustment between the Contractor and the facility operator.

10. Materials Furnished By Facility Operator:

It shall be the Contractor's responsibility to inspect material to be installed by him immediately upon delivery and advise the facility operator through its authorized representative, of all damaged materials. The Contractor at no additional costs to the City or the facility operator shall replace any material that is damaged or lost after the Contractor's inspection.

11. Liability And Insurance:

Notwithstanding the provisions of this contract, the existing division of liabilities to third parties shall remain the same as between the City and the company. Therefore, it is specifically agreed by the City, company and Contractor (by bidding on this contract) that for the purpose of any liabilities to third parties, that the City contractor performing work directly and physically relating to gas company facilities in this project, shall be deemed an agent of the company and not an agent of the City, the New York City Municipal Water Finance Authority, or the New York City Water Board. Contractor shall include the company as an additional insured on all insurance policies maintained to comply with the City's insurance requirements.

12. Width And Depth Of Excavation:

Contractor shall not be authorized to deliberately change trench or excavation widths and/or depth specified without Engineer's approval. Enlargement of any side of excavation up to eighteen (18) inches beyond pay limits (or inside face of sheeting) requested by the Contractor for the installation of certain types of sheeting may be granted. However, such enlargements or those greater than allowable shall not be approved when, in the sole judgment of the City, field conditions allow the water mains and sewer work to be performed within the limits specified and, the sole purpose of such enlargement request is to impact adjacent utilities (public or private) whose support and protection are part of this contract. Any approval shall be given at no additional cost to the City contract, including EP-7 funding, and all costs associated with unauthorized enlargements shall be the sole responsibility of the Contractor.

13. Depth And Crossing Angles Of Gas Facilities:

Where gas facilities are shown (or specified as) crossing proposed alignment of sewers, water mains, catch basins and chute connections or any other proposed excavations at specific angles (as measured off plans or sketches or specified in contract), it shall be understood that actual field measurements may deviate (plus or minus) forty-five (45) degrees from those shown or specified. The cover, or depth from street surface to top of facilities, shall be as shown or specified in contract documents, no deviation is to be assumed. Where gas facilities are not shown on contract documents, but their support and protection are otherwise included in this contract then, all references to facilities crossing at "various angles and depth" in the gas sections shall mean that such facilities are crossing sewer, water, catch basin and, catch basin chute, and other excavations at a ninety (90) degree angle to the proposed sheeting line or side of

excavation (for unsheeted trenches) with an allowable deviation of forty-five (45) degrees in any direction, except for catch basin chute excavation where the allowable deviation shall be sixty (60) degrees. Where the cover is not noted or specified, the bottom face of such facilities shall be assumed to be crossing catch basin chutes at a depth of three (3) foot eight (8) inches or less from the street surface. Paragraph No. 2 above shall apply in cases of distribution water main construction. Appropriate bid items and specifications are provided for cases where angle and depth are greater than stated above. This section also applies to work defined in "Emergency Reconstruction Contracts" or so-called "Where and When Contracts". These contracts are not pre-engineered and consequently have no drawings, sketches or determined locations and so, gas facilities encountered will be crossing existing and proposed sewer, water, catch basin/catch basin chutes and all appurtenances at various angles and depths.

14. Maintenance Of Traffic For Gas Work:

All work pertaining to gas bid items and specifications shall be performed within the contract maintenance of traffic plan as specified in the contract document. The bid price for the Maintenance and Protection of Traffic shall cover all work pertaining to gas items. The City shall make compensation for additional maintenance and protection of traffic items in connection with gas item of work only when such additional work is deemed reasonable and necessary by the Resident Engineer and is approved by him prior to its performance.

15. Relocated Gas And Temporary Systems Installation:

In cases where the Contractor is allowed to select the location for temporary construction such as, installation of dewatering headers, wells, well points, etc., he shall not disturb any gas facilities shown on sketches provided in this section. The only exception shall be, if the affected gas company agrees to such relocation and provided that the cost of such relocation is a matter of adjustment between the company and Contractor, and at no cost to the City.

16. Role Of Company Inspector:

In any case in which the City elects to perform some or all support and protection work with its own employees, personnel or contractors, the facility operator shall provide onsite inspectors to approve and certify such support and protection work (exclusive of City accommodations) performed by the City's own employees, personnel, and contractors. Facility operator's inspectors are not authorized to direct City contractor during the performance of contract work. They shall act through the City Resident Engineer and provide him/her required approvals and certifications, prior to preparing partial payments of EP-7 items, in a format and frequency to be prescribed by the appropriate City Head of Construction.

17. Coordination With Gas Company:

The Contractor shall be required to notify the gas company(ies), in writing, at least two (2) weeks prior to the start of final paving in order to allow companies to complete any unfinished gas work located within the area to be paved. Every effort shall be made to maintain gas service with minimum inconvenience to the public.

III - TECHNICAL SECTION

SECTION 6.01 - Trench Crossings; Support And Protection Of Gas Facilities And Services.

1. Description:

Under this section, the Contractor shall provide all labor, materials, equipment, and incidentals required to

support and/or protect the integrity of gas mains, services and appurtenances of any sizes, configurations, and operating pressures crossing trench excavations above subgrade for planned construction of sewers and water mains facilities. A gas service shall be defined as a gas pipe of three (3) inches in diameter or less branching from the main to a customer pick up point or property valve box. A gas main may be any size pipe that is part of a distribution or transmission network other than services described above. Crossings shall be defined as gas facilities spanning the width of excavation (one side to the other side). These crossings may be at various angles and depth as shown on "Gas Cost Sharing Work Standard Sketches Nos. 1 and 1A", and as specified in "General Provisions; Gas Cost Sharing Work Paragraph No. 13" and, at the locations shown or listed in contract documents. The gas company operating in the area, (facility operator), owns these facilities. The work shall be performed in accordance with contract specifications, plans, and at the directions of the Resident Engineer in consultation with the authorized representatives of the facility operator.

2. Method Of Construction:

A. Protection: In general, the gas facilities shall be protected as required by New York State Industrial Code 753. In particular, the Contractor shall use hand excavation methods (pick and shovel or hand held power tools) directly below the pavement base to expose the gas facilities (marked out by facility operators) and to ascertain the clearances and cover of the facilities with respect to the proposed excavation. Upon exposing the affected facilities sufficiently, at the discretion of the Resident Engineer, to ascertain the foregoing, Contractor shall be permitted to proceed with a combination of hand and machine excavation, as appropriate, outside a zone of protection whose limit shall be defined as a perimeter located twelve (12) inches from the outside face of each gas facility crossings (See "Gas Cost Sharing Work Standard Sketch No. 2"). If the facilities are in direct interference with City work, meaning that "Minimum Clearances" described in "General Provisions; Gas Cost Sharing Work Paragraph No. 8" cannot be maintained, and excavation has to be temporarily or permanently abandoned then this particular location shall become a test pit and dealt with as specified in Section 6.07, and "General Provisions; Gas Cost Sharing Work Paragraphs Nos. 2 and 8".

B. Support: Gas mains or services crossing excavations equal or less than four (4) feet wide are generally self supporting, unless field conditions as determined by the Resident Engineer require otherwise. The support requirements for gas mains and services crossing excavations greater than four (4) feet wide shall be as shown on the attached "Gas Cost Sharing Work Standard Sketch No. 1" and Contractor shall use sheeting methods that permit the maintenance of gas facilities in their existing locations and configurations. Alternate methods equivalent to those shown on the sketch or accommodations by the facility operator proposed by the Contractor in order to facilitate the execution of the specified work shall be allowable, provided that prior approval is obtained by the Contractor from the Engineer and the facility operator. The support and protection of gas facilities crossings shown on plans, drawings, listings or otherwise identified in this contract shall not be circumvented with the issuance of so called "order outs".

3. Method Of Measurement:

The Contractor shall be paid for supporting and/or protecting gas facilities crossing trench excavations under the appropriate bid items covered by this section. The Contractor shall be directly responsible to the facility operator for the total cost of using any alternate method requiring the use of resources owned by the facility operator. Regardless of the method used, the City shall pay the bid price for the appropriate support and/or protect item of work. The average rate charged by the facility operator for alternate support and protection work such as, disconnecting and reconnecting gas services is listed in attached "Schedule GCS-A".

4. Payment Restrictions:

These items shall not be paid for: gas services crossing unsheeted water main trench excavation; abandoned gas main/services identified by facility operator; gas mains/services crossing trench excavations for fire hydrant branch connections pipes, catch basins and/or chutes (sewer drain pipe), house sewer and/or water services; gas facilities encroaching any face of excavation for sewer and/or

water construction, all of which are covered under other contract sections. Also this item shall not be paid for new gas mains and services crossing water trenches when trenching for such new facilities has been performed by the Contractor in common with trench excavation for City work (overlapping trench limits). The cost of supporting and protecting such gas facilities crossings shall be deemed included in the cost of trench excavation for the new gas facilities. This payment restriction shall apply even if such common trench gas excavation is not part of the contract. The prices bid for items covered by this section represent full compensation to Contractor to completely perform the work described. No other bid items shall be combined with these items in order to pay for gas main and/or services crossing excavations specified herein.

5. Method Of Payment:

Each (Ea.) gas facility crossing trench excavation as described in these specifications shall be counted for payment.

6. Price To Cover:

The cost of timber/steel supports installed for gas facilities shall be included in the bid price. The bid price for each crossing shall also cover all additional supervision, labor, material (except those provided by the facility operator), equipment and insurance necessary to completely maintain the gas facilities without disruption of service to the customers and in accordance with contract plans, specifications and facility operator standards. The price shall also include: changes of method of operations; sheeting modifications where necessary to accommodate the gas facilities crossings; installation and removal of water pipe under gas facilities (so called "snaking"); extra care during excavation (including hand excavation under existing single and multiple gas facilities); extra backfilling and compaction around, over and under gas facilities; installation and removal of sheeting around gas facilities; associated maintenance and protection of traffic; barricades; and traffic plates that may be required to temporarily close and/or complete the work.

SECTION 6.02 - Extra Excavation For The Installation Of Catch Basin Sewer Drain Pipes With Gas Interferences.

1. Description:

Under this item, the Contractor shall provide all labor, materials, equipment, insurance, and incidentals for the extra excavation associated with the installation of catch basin sewer drain pipes (chute) under gas facilities of various sizes crossing the trench excavation at various angles and depth at the locations shown in the contract documents and also, for the support and protection of these facilities during associated excavation and backfill operations. The gas company operating in the area, (facility operator), owns these facilities.

2. Method Of Measurement:

The bid price shall be per location (Each) where extra excavation is required when catch basin sewer drain pipes are installed at an upstream invert depth lower than four (4) feet (up to a maximum of six (6) feet) from the proposed pavement grade because the bottom faces of interfering gas mains and appurtenances are located at a depth greater than three (3) foot eight (8) inches from proposed pavement surface (See "Gas Cost Sharing Work Standard Sketch No. 4").

3. Method Of Construction:

Incremental cost responsibility for chute excavation is determined by the first private facility encountered starting from catch basin structure proper and that prevents the installation of the chute connection at an upstream cover less than or equal to three (3) feet or any other minimum cover required to avoid City facilities (e.g. water, sewer, etc.) as directed by the Resident Engineer.

4. Payment Restrictions:

This item shall not apply and related bid item shall not be paid in cases where:

A. Upstream invert chute is more than six (6) feet deep because of gas facilities.

B. Chute cannot be installed above existing gas facilities because of interferences with other private facilities that are not otherwise covered under this contract, regardless of upstream invert depth.

The above cases shall be at no cost to the City, but shall be a matter of adjustment between the Contractor and the facility operator(s).

5. Price To Cover:

The bid price shall cover the additional cost of all additional supervision, labor, materials, equipment and insurance, to complete the installation of catch basins and associated sewer connections in accordance with the contract plans and specifications. The price shall include: excavation by hand around and under single and multiple gas facilities; locating, supporting and protecting gas facilities; backfilling and all other items necessary to perform all work incidental thereto including: installation and removal of drain pipe under gas facilities ("snaking"); widening of trenches to facilitate the above work; subsequent additional backfill and pavement restoration; modifying precast catch basin window to accommodate connection; changing sheeting method and configuration to accommodate gas facility crossings; maintenance and protection of traffic; barricades; and installation of traffic plates that may be required to temporarily close and/or complete the work. The price shall not include removal of ledge rock and/or excavation of boulders in open cut.

SECTION 6.02.1 - Extra Excavation For The Installation Of Catch Basin Sewer Drain Pipes With Upstream Inverts Greater Than Six (6) Feet.

1. Description:

Under this item, the Contractor shall provide all labor, materials, equipment, insurance and incidentals for the extra excavation of catch basin chutes where the upstream invert is greater than six (6) feet under gas facilities of various sizes crossing the trench excavation at various angles and depth at the locations shown in the contract documents or as determined by field conditions and also, for the support and protection of these facilities during the associated excavation, sheeting and backfilling operations.

2. Method Of Measurement:

The bid price shall be per location (Each) where extra excavation and sheeting is required when the catch basin chute installed at an upstream invert depth lower than six (6) feet from the proposed pavement grade because the bottom faces of the interfering gas mains and appurtenances are located at a greater depth than three foot eight inches from the proposed pavement surface only.

3. Method Of Construction:

Incremental cost responsibility for chute excavation is determined by the first private facility encountered during such excavation when initiated from catch basin structure and that prevents the installation of the chute at an upstream cover less than or equal to three (3) feet or any other cover required to avoid City facilities as directed by the Resident Engineer.

4. Payment Restriction:

This item shall not apply and related bid item shall not be paid in cases where:
Upstream invert chute is less than or equal to six (6) feet deep because of gas facilities. Section 6.02 shall be paid.

5. Price To Cover:

The bid price shall cover the additional cost of all supervision, labor, materials, equipment and insurance to complete the installation of catch basin and associated sewer connections in accordance with the contract plans and specifications. The price shall include: excavation by hand around and under single and multiple gas facilities; locating, supporting and protecting gas facilities incidental thereto; widening of trenches to facilitate the above work; subsequent additional backfilling and pavement restoration; modifying pre-cast basin window to accommodate connection; the installation of catch basin with deeper sumps as specified; additional sheeting and changes in sheeting method and configuration to accommodate gas facility crossings; maintenance and protection of traffic; barricades; and installation of traffic plates that may be required to temporarily close and/or complete the work.

SECTION 6.03 - Removal Of Abandoned Gas Facilities. All Sizes.

1. Description:

Under this section the Contractor shall provide all labor, materials, equipment, insurance and, incidentals required for the removal of abandoned gas mains, services, or appurtenances thereof, located within the street shown on the contract plans, owned by gas company operating in the project area (facility operator), used or to be used for or in connection with or to facilitate the conveying, transportation, distribution or furnishing of gas (natural or manufactured or mixture of both) for light, heat, or power, but does not include property used solely for or in connection with business of selling, distributing or furnishing of gas in enclosed containers. Such removal shall include only abandoned gas facilities that interfere with (i.e. cause additional work) City work.

2. Determination Of Operating Status Of Gas Facilities:

The Contractor shall notify facility operator, as required by New York State Industrial Code 753. Gas facilities shall not be removed without the approval of the facility operator whose authorized representative shall certify in writing (specific facility or area wide facilities certification) and in a timely manner acceptable to the Resident Engineer that abandoned facilities are free of combustible gas and any other environmental contaminants prior to removal. The Resident Engineer shall rely on facility operator's certification. The facility operator may request the excavation of test pits (See Section 6.07) for this determination ahead of City work and, Contractor shall provide safe access, facilitate and permit facility operator to enter test pit excavations for the purpose of testing gas facilities to be removed by the Contractor. However, facility operator may prefer to make this test during performance of City work, in order to issue the above certification. This shall be permitted provided that it is agreed that additional costs, if any resulting from this choice shall be a matter of adjustment between the Contractor and facility operator only, and at no cost to the City.

3. Restrictions:

The facility operator shall be solely responsible for its contaminated gas facilities, surrounding contaminated soil and their disposal and abatement procedures, unless contract bid items are applicable and provided for such work. In such cases, the quantity removed shall be charged to EP-7 bid item "UTL-GCS-2WS - GAS INTERFERENCES AND ACCOMMODATIONS" at the City bid prices.

4. Method Of Measurement:

Abandoned gas pipeline removal shall be measured for payment per linear foot of pipe and appurtenances removed.

5. Price To Cover:

The price shall cover all additional cost of supervision, labor, materials, equipment, and insurance necessary to complete this work in accordance with the contract plans and specifications, including excavation by hand around and under other City and facility operator owned properties and, where necessary, support and protection of such properties. The price shall also cover breaking, cutting, and/or burning of abandoned gas pipes and their disposal from the site; sealing open ends remaining in the excavation with concrete or caps (caps to be provided by the facility operator) and backfilling of the area where the pipeline has been removed with clean backfill. The price shall also include any required dump charges. This item does not include any type of extra excavation, backfilling, compaction, pavement removal and restoration associated with abandoned gas facilities removal, all of which are covered under Section 6.06.

SECTION 6.03.1 - Removal Of Abandoned Gas Facilities With Possible Coal Tar Wrap. All Sizes. (For National Grid Work Only)

1. Description:

Under this section the Contractor shall provide all labor, materials, equipment, insurance and, incidentals required for the removal of abandoned gas mains, services or appurtenances thereof, located within the street shown on the contract plans, owned by the gas company operating in the project area (facility operator), used or to be used for or in connection with or to facilitate the conveying, transportation, distribution or furnishing of gas (natural or manufactured or mixture of both) for light, heat, or power, but does not include property used solely for or in connection with business of selling, distributing or furnishing of gas in enclosed containers. Such removal shall include only abandoned gas facilities that interfere with (i.e. cause additional work) City work. These gas facilities may be coated with Coal Tar Wrap and so, may require special handling and disposal methods as specified in National Grid Standard Operating Procedure 12-2, Coal Tar Wrap Handling and 12NYCRR56.

2. Determination Of Operating Status Of Gas Facilities:

The Contractor shall notify facility operator, as required by New York State Industrial Code 753. Gas facilities shall not be removed without the approval of the facility operator whose authorized representative shall certify in writing (specific facility or area wide facilities certification) and in a timely manner acceptable to the Resident Engineer that abandoned facilities are free of combustible gas and any other environmental contaminants prior to removal. The Resident Engineer shall rely on the facility operator's certification. The facility operator may request the excavation of test pits (See Section 6.07) for this determination ahead of City work and, the Contractor shall provide safe access, facilitate and permit facility operator to enter test pit excavations for the purpose of testing gas facilities to be removed by the Contractor. However, the facility operator may prefer to make this test during performance of City work, in order to issue the above certification. This shall be permitted provided that it is agreed that additional costs, if any, resulting from this choice shall be a matter of adjustment between the Contractor and the facility operator only, and at no cost to the City contract. Should such investigation result in the determination that the abandoned gas facilities do not contain Coal Tar Wrap then the removal of said facilities shall be covered under separate item (See Section 6.03).

3. Requirements:

The City Contractor shall excavate abandoned gas facility sufficiently, either in its entirety, or at locations determined by Contractor to allow the removal of Coal Tar Wrap (if present on the abandoned gas facility) and to facilitate the safe extraction of manageable lengths of abandoned pipe without damage to adjacent facilities, utilities or City structures either parallel to or crossing above or below abandoned gas facility. The Contractor is to allow access to the designated cutting points within the Contractor's trench by authorized National Grid personnel who will remove the Coal Tar Wrap as per National Grid procedures. This work by National Grid personnel shall be performed in a timely fashion and shall not unduly impede the Contractor's progress and/or productivity. Upon completion of the coating removal, the Contractor shall be allowed to cut, burn or grind the gas facility and remove the section of abandoned pipe. The

Contractor at a site designated by the Contractor shall stockpile the removed pipe. The facility operator will be responsible to provide trucking and disposal services with its own personnel and shall remove the stockpiled pipes during off hours or during such time as agreed to by the Contractor. Since the pipe removed will remain the property of the facility operator and is to be disposed of by the facility operator, the facility operator shall be responsible for any required notifications, filings, dump charges and incidentals associated with the disposal of abandoned gas facilities found to contain Coal Tar Wrap.

4. Method Of Measurement:

Abandoned gas pipeline removal shall be measured for payment per linear foot of pipe and appurtenances removed.

5. Price To Cover:

The price shall cover all additional cost of supervision, labor, materials, equipment and insurance necessary to complete this work in accordance with the contract plans and specifications, including excavation by hand around and under other City and facility operator owned properties and, where necessary, the support and protection of such properties. The cost shall also include hand excavation in the area(s) of proposed abandoned pipe cut(s), cutting and/or burning of abandoned gas pipes and stockpile of removed sections of abandoned pipe and associated maintenance and protection of traffic, blocking and temporary fencing if required. The unit price shall also cover sealing open ends remaining in the excavation with concrete or end caps (end caps to be provided by the facility operator) and backfilling of the area where the abandoned pipeline has been removed with clean backfill material. This item does not include any type of extra excavation, backfilling, compaction, pavement removal and/or restoration (temporary and permanent) associated with abandoned pipe removal ("lost trench"), all of which are covered under separate Section 6.06. The price shall also include allowance for any loss of productivity by the Contractor due to required facility operator work to remove pipe coating and prepare pipe for cutting as well as any change in Contractor's excavation method, additional trucking and/or stockpiling costs.

SECTION 6.03.1a - Removal Of Abandoned Gas Facilities With Possible Coal Tar Wrap. All Sizes. (For Con Edison Work Only)

1. Description:

Under this section the Contractor shall provide all labor, material, equipment, insurance and, incidentals required to prepare abandoned gas mains, services and appurtenances thereof located within the street shown on contract plans, owned by the gas company operating in the project area (facility operator), for removal due to interference with proposed City work. These abandoned gas facilities were, at one time, used for or in connection with or to facilitate the conveying, transportation, distribution or furnishing of gas (natural, manufactured or a combination of both) for light, heat, or power, but does not include property used solely for or in connection with business of selling, distribution or furnishing of gas in enclosed containers. Such preparation for removal shall include only abandoned gas facilities that interfere with (i.e. cause additional work) City work. These gas facilities may be coated with Coal Tar Wrap which may contain asbestos or PCB's and so, may require special handling and disposal methods as specified in Con Edison - ASBESTOS MANAGEMENT MANUAL, CHAPTER 6 - ASBESTOS WORK PROCEDURES, SECTION 06.04 - COAL TAR WRAP REMOVAL. For under 25' (feet) in length and an approved NYC-DEP variance for over 25' (feet).

2. Determination Of Operating Status Of Gas Facilities:

The Contractor shall notify facility operator, as required by New York State Industrial Code 753. Gas Facilities shall not be removed without the approval of the facility operator whose authorized representative shall certify in writing (specific facility or area wide facilities certification) and in a timely manner acceptable to the Resident Engineer that abandoned facilities are free of combustible gas and any other environmental contaminants prior to removal. The Resident Engineer shall rely on the facility

operator's certification. The facility operator may request the excavation of test pits (See Section 6.07) for this determination ahead of City work and Contractor shall provide safe access, facilitate and permit facility operator to enter test pit excavations for the purpose of testing gas facilities. However, the facility operator may prefer to make this test during performance of City work in order to issue the above certification. This shall be permitted provided that it is agreed that additional costs, if any, resulting from this choice shall be a matter of adjustment between the Contractor and the facility operator only, and at no cost the City contract. Should such investigation result in the determination that the abandoned gas facilities do not contain Coal Tar Warp then the removal of said facilities shall be covered under separate item (See Section 6.03).

3. Requirements:

The Contractor shall excavate abandoned gas facility sufficiently, either in it's entirety, or at locations determined by Contractor to allow the removal of Coal Tar Wrap (if present on the abandoned gas facility) and to facilitate the safe extraction of manageable lengths of abandoned pipe without damage to adjacent facilities, utilities or city structures either parallel to or crossing above or below abandoned gas facility. The Contractor is to allow access to the designated cutting points within the Contractors trench by authorized Con Edison personnel who will remove the Coal Tar Wrap as per Con Edison and/or NYC-DEP approved procedures. This access shall conform to all applicable codes, rules & regulations. This work by Con Edison personnel shall be performed in a timely fashion and shall not unduly impede the Contractors progress and/or productivity. Upon completion of the coating removal, the Contractor shall be allowed to cut, burn or grind the gas facility and remove the section of abandoned pipe. Contractor shall designate a specific site to stockpile those removed pipes. The facility operator will be responsible to provide trucking and disposal services with its own personnel and shall remove the stockpiled pipes during off hours or during such time as agreed to by the Contractor. Since the pipe removed will remain the property of the facility operator and is to be disposed of by the facility operator, the facility operator shall be responsible for any required notifications, filings, dump charges and incidentals associated with the disposal of abandoned gas facilities found to contain Coal Tar Wrap.

4. Method Of Measurement:

Abandoned gas facility removal shall be measured for payment per linear foot of pipe and appurtenances removed.

5. Price To Cover:

The price shall cover all additional cost of supervision, labor, materials, equipment and insurance necessary to complete this work in accordance with the plans and specifications, including, but not limited to, excavation by hand around and under other City and facility operator owned properties and, where necessary, the support and protection of such properties. The cost shall also include hand excavation in the area(s) of proposed abandoned pipe cut(s), cutting and/or burning of abandoned gas pipes and stockpile of removed sections of abandoned pipe and associated maintenance of traffic, blocking and temporary fencing if required. The unit price shall also cover sealing open ends remaining in the excavation with concrete or end caps (end caps to be supplied by facility operator) and backfilling of the area where the abandoned pipeline has been removed with clean backfill material. This item does not include any type of extra excavation, backfilling, compaction, pavement removal and/or restoration (temporary and permanent) associated with abandoned pipe removal ("lost trench"), all of which are covered under separate Section 6.06. The price shall also include allowance for any loss of productivity by the Contractor due to required facility operator work to remove pipe coating and prepare pipe for cutting as well as any change in Contractor excavation method, additional trucking and/or stockpiling costs.

SECTION 6.04 - Adjust Hardware To Grade Using Spacer Rings/Adaptors. (Street Repaving.)

1. Description:

Under this section, the Contractor shall provide all labor, supervision, materials, equipment, insurance and incidentals required to adjust to final grade gas street surface hardware located within the contract area boundaries shown on the plans. The gas company operating in the area, (facility operator), owns these facilities. The work shall be performed in accordance with the contract plans, specifications and at the directions of the Resident Engineer in concurrence with authorized representative of the facility operator.

2. Materials:

The facility operator shall furnish and deliver all prefabricated hardware parts required. These include adaptors for the grade adjustment proper and new street hardware if existing ones are found to be defective, all in accordance with the facility operator standards and City rules and regulations. The Contractor shall notify the facility operator of the installation schedule at least three (3) business days before materials are required on the site. Should the facility operator fail to deliver the necessary material according to any schedule mutually agreed upon by the Contractor and facility operator, the City shall not be responsible for any delays attributable thereto, nor for the failure of delivery of such materials. On project where material storage is not permitted on site, the facility operator shall deliver the required material to the Contractor's yard and it shall be the Contractor's responsibility to transport the material to the work site when needed for installation. It shall also be the Contractor's responsibility to inspect the materials to be installed by him immediately upon delivery and advise the facility operator through its authorized representative, of all damaged materials. The Contractor at no additional expense to the City or the facility operator shall replace any material that is damaged or lost after the Contractor's inspection.

3. Method Of Measurement:

The Contractor shall be paid for each six (6) inch round box and/or nine (9) inch square box adjusted to grade regardless of adjustment height requirements.

4. Price To Cover:

The unit price bid for this item shall include all additional labor, supervision, insurance, equipment and, material (except those to be provided by the facility operator), required to adjust each box to grade as required in the contract plans and specifications. The bid price shall also include the removal of existing frames and covers from existing facilities to be salvaged and returned to the facility operator and, all material transportation from the Contractor's material storage yard to the work site. In addition the bid price shall include "chipping" around existing box using appropriate means and methods where grinding is required.

SECTION 6.05 - Adjust Hardware To Grade By Resetting. (Road Reconstruction.)

1. Description:

Under this item, the Contractor shall provide all labor, supervision, materials, equipment, insurance and incidentals required to adjust to the proposed grade gas street surface hardware located within the contract area boundaries shown on the plans. The gas company operating in the area, (facility operator), owns these facilities. The work shall consist of either building up or lowering or resetting the casting by removing the existing frame and cover building up or decreasing the existing installation, replacing the frame and/or cover if damaged or worn out, as determined by the Resident Engineer, with a new frame and/or cover furnished by the owner, and setting the frame and cover to new elevation. The work shall be performed in accordance with the contract plans, specifications and at the directions of the Resident Engineer.

2. Materials:

The facility operator shall furnish and deliver all new hardware parts required. The Contractor shall furnish materials such as mortar, bricks and concrete in compliance with contract requirements. At locations

where high-early strength concrete is required under this contract to be placed adjacent to gas facilities, then the requirement for concrete shall be high-early strength complying with the current New York State Department of Transportation, Standard Specifications for Class F concrete. Existing castings may be replaced as required and deemed necessary by the Engineer and by City rules and regulations. The Contractor shall install the new castings of various sizes furnished by the facility operator. The Contractor shall notify the facility operator of the installation schedule at least three (3) business days before materials are required on the site and, shall provide off-loading services to the facility operator. Should the facility operator fail to deliver the necessary material according to any schedule mutually agreed upon by the Contractor and facility operator, the City shall not be responsible for any delays attributable thereto, nor for the failure of delivery of such materials. Such delays shall be a matter of adjustment between the Contractor and the facility operator. On project where material storage is not permitted on site, the facility operator shall deliver the required material to the Contractor's yard and it shall be the Contractor's responsibility to transport the material to the work site when needed for installation. It shall also be the Contractor's responsibility to inspect the materials to be installed by him, immediately upon delivery and advise the facility operator through its authorized representative, of all damaged materials. The Contractor at no additional expense to the City or the facility operator shall replace any material that is damaged or lost after the Contractor's inspection.

3. Methods Of Construction:

The Contractor shall remove and reinstall existing castings or install new castings to the proposed grade. Setting and resetting the castings shall be done with mortar and brick according to the standards of the facility operator. Work shall be performed in a workmanlike manner. Castings that are deemed unacceptable for resetting shall remain the property of the facility operator and he shall be responsible for their removal and proper disposal from site. No traffic shall be allowed on adjusted street hardware until permitted by the Engineer.

4. Method Of Measurement:

The Contractor shall be paid for each gas hardware adjusted to grade regardless of size or adjustment height requirements (up or down).

5. Price To Cover:

The unit price bid for this item shall include all additional labor, supervision, insurance, equipment and, material (except those to be provided by the facility operator), required to adjust each gas hardware to grade as required in the contract plans and specifications. The bid price shall also include the removal of existing frames and covers from existing facilities; building up the existing installations with bricks and mortar, or lowering the existing installation by removing bricks and mortar; replacing damaged frames and/or covers with new frames and/or covers furnished by the facility operator; setting the frames and covers to the new elevations; protect existing installations; repair minor structural damages to existing installations prior to resetting frames; unloading of furnished castings at the Contractor's yard and transporting castings from the Contractor's yard to the job site as required; completing the work in accordance with the contract plans, specifications and, at the directions of the Engineer. In addition the bid price shall include "chipping" around existing gas facilities using appropriate means and methods where grinding is required.

SECTION 6.06 - Special Care Excavation And Backfilling.

1. Description:

Under this section, the Contractor shall provide all labor, materials, equipment, insurance and incidentals required to support and protect the integrity of live gas facilities including mains, services, related structures and appurtenances during excavations. The gas company operating in the area, (facility operator), owns these facilities. The work shall be performed in accordance with the contract plans, specifications and at the directions of the Resident Engineer in consultation with authorized

representatives of the facility operator.

2. Applicability Of Section:

This section shall apply to live gas facilities of various sizes located within two (2) feet of any face of unsheeted excavation, (unsheeted excavation refers to any excavation performed for city work and includes excavations performed that are to be subsequently sheeted using approved methods) and paralleling or, encroaching any face of excavation. Also, for crossings greater than forty-five (45) degrees and/or located at a cover depth greater than five (5) feet from existing street surface. Parallel facilities are not exposed at any time during excavation (See "Gas Cost Sharing Work Standard Sketch No. 5"). Encroaching facilities are partially exposed inside the limit of excavation (See "Gas Cost Sharing Work Standard Sketch No. 5"). This section shall also apply to gas facilities crossing catch basins excavation, and catch basins sewer connections (chutes) trench excavation only when extra depth (covered in other section), is not required for chutes installations because of such utilities interferences (See "Gas Cost Sharing Work Standard Sketch No. 3"). This section shall also apply to gas services (if shown or otherwise listed in contract documents) crossing unsheeted excavations for water mains, gas facilities crossing fire hydrant branch connections, house sewer and/or water service connections excavations. This section shall also apply for so called "loss trench", as described further, and for additional excavation (pavement and/or soil), backfilling, compaction, roadway base and pavement restoration due to abandoned gas facilities, only if removed by Contractor. If operating status of gas facilities cannot be determined prior to excavation then such facilities shall be considered live and this section shall fully apply. The excavation around fully exposed live gas facilities along and within limits of excavation (not crossings) shall be covered by this section also (not shown on "Gas Cost Sharing Work Standard Sketch No. 5"), however the support requirement, if any is required, of such facilities is beyond the scope of these specifications and therefore shall be the responsibility of facility operator to determine and prescribe, at no cost to the City contract, but shall be a matter of adjustment between the Contractor and facility operator.

3. Payment Restriction:

No special care excavation shall be paid for abandoned gas facilities paralleling and/or encroaching excavation and therefore are not in direct interference with City work. Except as allowed in this section, the bid item specified under this section shall not be used in combination with items covered under other sections for work done due to a particular gas facility. This item shall not be paid for new gas facilities when trenching for such new facilities has been performed by the Contractor of record in common with trench excavation for City Work (overlapping trench limits). The cost of excavating with care as defined in this section shall be deemed included in the cost of trench excavation for the new gas facilities. This restriction shall apply even if such gas common trench excavation is not part of the contract. If facilities are in direct interference with City work, meaning that "Minimum Clearances" described in "General Provisions; Gas Cost Sharing Work Paragraph No. 8" cannot be maintained and excavation has to be temporarily or permanently abandoned then this particular location shall become a test pit and dealt with as specified in Section 6.07 and "General Provisions; Gas Cost Sharing Work Paragraphs Nos. 2 and 8".

4. Method Of Construction:

All excavation in the vicinity of gas facilities shall be as required by NYS Industrial Code 753. Where these facilities are paralleling and located two (2) feet or less from the limits of the proposed excavation, the Contractor shall use hand excavation methods (pick and shovel or hand held power tools) to ascertain the clearances of these facilities with respect to the proposed excavation. Once the location of these facilities with respect to the proposed excavation is verified to the satisfaction of the Resident Engineer, the Contractor shall then proceed with a combination of hand and machine excavation as required preserving the integrity of the facilities. The installation of timber supports or underpinning, when soil foundation cannot fully support partially exposed pipes, may be required to prevent pipe movement as directed by the Resident Engineer.

5. Method Of Payment:

The unit price for this work item shall be based on cubic yard (CY) of average excavation with care and, is

to be considered as an incremental cost for performing City work with gas facilities interferences.

6. Method Of Measurement:

A. For Paralleling Facilities: Volume calculated as: Depth as measured from existing street surface to the bottom of unsheeted trench excavation allowable by OSHA regulations, multiplied by, the width measured as one (1) foot from the face of excavation toward the center of excavation, multiplied by the length of parallel facility, divided by twenty-seven (27) cubic feet per cubic yard (See "Gas Cost Sharing Work Standard Sketch No. 5"). The gas facility is no longer considered to be in interference once sheeting has been installed, therefore no further compensation for paralleling facilities as described above will be made.

B. For Encroaching Facilities: Volume calculated as: Depth of trench as allowable by OSHA, maximum up to five (5) feet multiplied by, the width of partially exposed pipe plus one (1) foot, multiplied by the length of facility encroachment, divided by twenty-seven (27) cubic feet per cubic yard (See "Gas Cost Sharing Work Standard Sketch No. 5").

C. Fully Exposed Gas Facilities: (Not shown on "Gas Cost Sharing Work Standard Sketch No. 5") along and inside trench and/or crossing trench at an angle greater than forty-five (45) degrees and/or a cover depth greater than five (5) feet from the existing street surface. The volume shall be measured as the depth of trench excavation multiplied by the distance measured along the sheeting line between two (2) points of intersections of the gas facilities and the sides of trench excavation, multiplied by the width of trench excavation.

D. For Additional Excavation And Restoration Due To So Called "Loss Trench", When The Integrity Of Pavement And Soil Above And Around Existing Live Gas Facilities Cannot Be Maintained Due To Its Lack Of Cohesiveness: Volume shall be calculated as: Depth of unsheeted trench excavation multiplied by width measured as distance of facility from closest edge of unsheeted excavation plus, width of facility proper plus, one (1) foot or a maximum width of three (3) feet multiplied by length of facility fully exposed divided by, twenty-seven (27) cubic feet per cubic yard (not shown on "Gas Cost Sharing Work Standard Sketch No. 5").

E. For Facilities Crossing Excavation For Catch Basins, Or Chutes Installations (When NYCDEP Funded) Or Fire Hydrant Branch Connections, Or Unsheeted Water Main Trench, Or House Sewer And/Or Water Services: Volume calculated as: Depth as measured from existing street surface to the bottom of the trench excavation multiplied by, the width taken as the outside diameter of pipe or the width of structure plus one (1) foot on either side (two (2) feet), multiplied by, the length of exposed facility crossing the trench, divided by twenty-seven (27) cubic feet per cubic yard (not shown on "Gas Cost Sharing Work Standard Sketch No. 5").

Overlapping volume dimensions measured as described above may occur when multiple facilities are paralleling excavations, encroaching excavations or crossing catch basins and catch basin chute installations. In such cases, all such facilities shall be counted as one limited by the extreme pipes, faces (See "Gas Cost Sharing Work Standard Sketch No. 2"). The volume shall then be calculated as described above.

7. Price To Cover:

The bid price shall also cover all additional supervision, labor, material, equipment and insurance necessary to excavate while protecting and maintaining (excluding supports for fully exposed live gas) gas facilities without disruption of service to the public and in accordance with contract specifications. The price shall also include, changes of sheeting method and excavation width configuration where necessary to accommodate gas facilities in their existing locations; difficulties during the installation of catch basins, chute connections, hydrant branch, and house sewer and water connections under or over gas facilities; loss of productivity due to slower rate of excavation (special care) during excavation, including the use of such methods as: hand excavation around existing single and multiple facilities, extra excavation and backfilling due to lost trench because of existing and adjacent gas facilities, compaction, removal of

sheeting from the facilities, extra roadway base restoration and temporary pavement, associated maintenance and protection of traffic, barricades, and traffic plates that may be required to temporarily close and/or complete the work.

SECTION 6.07 - Test Pits For Gas Facilities.

1. Description:

Under this section, the Contractor shall furnish all labor, materials, insurance, equipment and appliances necessary to excavate, sheet and, maintain test pits at locations approved by the Resident Engineer in consultation with the facility operator. Test pits shall be dug in order to ascertain exact locations, cover and invert elevations, clearances, alignment and operating status (live or dead) of existing gas facilities. The Contractor shall inspect jointly with the Resident Engineer and facility operator, gas facilities and other structures uncovered, take all relevant measurements and elevations as directed by the Resident Engineer. Tests to determine operating status of gas facilities shall be performed by facility operator. The pits shall be covered with steel plates during daytime nonworking hours, and uncovered, as required, until the inspection work is completed. Testing of gas facilities may require a maximum of four (4) hours. Then, the pits shall be backfilled with clean fill, and resurfaced with temporary pavement. All traffic shall be maintained and all safety measures as stipulated shall be complied with.

2. Methods Of Construction:

A. Excavation: Existing pavement to be removed shall be neatly cut along lines of removal with a saw or other approved equipment which leaves a neat straight joint line along the juncture with subsequently replaced pavement. Excavation in the vicinity of utilities and other structures shall be performed using hand tools. Use of hand operated pneumatic and electric jackhammers will be permitted only for breaking pavement and removal of masonry, concrete and boulders, or as otherwise directed by the Resident Engineer. The Contractor shall properly dispose of all materials excavated from test pits away from site. Test pits shall be excavated at locations shown on the contract drawings or as directed by the Resident Engineer. Additional test pits may be required and shall be excavated where required, as ordered by the Resident Engineer. All test pits shall be excavated to a depth and size necessary to locate the existing facilities. Sheeting shall be used when depth of excavation exceeds five (5) feet. The sheeting required shall be furnished and installed in full compliance with the State of New York and Federal Safety Codes requirements and as specified in contract, whichever is more stringent. Care shall be taken that no existing gas facilities or other structures are broken or damaged. All broken or damaged facilities shall be reported immediately to facility operator who shall decide whether such facilities shall be repaired or replaced by company forces or by City contractor and in conformance with "General Provisions; Gas Cost Sharing Work Paragraph No. 9". Contractor shall excavate all material encountered, including large masses of concrete, cemented masonry and boulders, as directed by the Resident Engineer. Any type of excavation protection used, shall satisfy the following:

   (a) Industrial Code Rule 753.
   (b) Prevent injury to workers and the public, and avoid damage to existing water, sewer, and gas pipes or other structures, and to pavements and their foundations, through caving or sliding of the banks of the excavation.

   Should it become necessary, as determined by the Resident Engineer, to enlarge any test pit in any dimension after sheeting has been placed, the Contractor shall remove portions of the sheeting, as necessary, enlarge the test pits as directed, and replace the sheeting without additional compensation for this work other than for the additional volume of material excavated.

B. Maintenance Of Test Pits: Excavated test pits shall be maintained free of debris and kept dry by the Contractor in order to permit the inspection and measurements and to determine the locations of facilities. In order to accomplish this, Contractor shall, upon completion of excavation and placement of sheeting (if depth greater than five (5) feet), furnish and install adequate steel plates and posting

over the excavated pits and shall temporarily remove all equipment debris and workers, and relocate barricades in order to open the full width of street to traffic during nonworking hours. The Contractor shall then, at no additional cost, relocate such barricades, barrels, cones and other warning devices and remove steel plates, as and when directed by the Resident Engineer to facilitate the inspection of exposed facilities. When work is being performed and the pits are not covered with steel plates, the Contractor shall provide complete and safe access to the test pits as may be required, and he shall provide construction barricades and maintain traffic at all times as shown or as directed by the Resident Engineer. Upon completion of test pit inspection by the Resident Engineer, the pit shall be backfilled by the Contractor as specified in contract, except that backfill material shall conform to contract specifications for such purpose.

C. Pavement And Sidewalk Restoration: After backfilling is completed, the Contractor shall construct a temporary pavement consisting of a minimum of four (4) inches thick asphaltic concrete mixture in roadway areas or a two (2) inches thick asphaltic concrete mixture in sidewalk areas in order to maintain existing pedestrian and vehicular traffic. This temporary pavement shall be maintained until permanent pavement and sidewalk replacement is constructed as specified in contract.

3. Measurements:

The quantity to be measured for payment shall be the number of cubic yards of material removed from within the limits of the pit dimensions as directed by the Resident Engineer. The volume occupied by existing pipes or other structures remaining within the maximum payment lines will not be deducted from the total volume measured except, where the cross sectional area of these facilities exceeds four (4) square feet. As determined by the Resident Engineer, the quantity measured for payment may be proportionate to a fair and reasonable estimate of gas responsibility in the total volume excavated.

4. Price To Cover:

The contract price bid per cubic yard for test pits shall cover all additional costs of labor, material, insurance, equipment, appliances and incidentals required to excavate test pits, including removal and disposal of excavated materials, sheeting, steel plating, backfill, compaction and temporary pavement and sidewalk restoration all in accordance with the specifications and as directed by the Resident Engineer. The price shall also include the cost of providing safe access to the excavation by facility operator for the performance of certain test to determine operating status of gas facilities prior to City work. The price shall also include support and protection of all gas facilities crossing excavation, paralleling and/or encroaching any face of excavation.

SECTION 6.09 - Trench Excavation and Backfill for New Gas Mains and Services (For National Grid Work Only)

1. Description:

Under this section, the contractor shall furnish all labor, materials, equipment, insurance, permits and incidentals required to break/remove roadway and sidewalk pavement, excavate, backfill and restore gas trenches. The trench to be excavated shall be determined by the size of the gas facility to be installed. The work shall be performed in accordance with applicable specifications, and/or at the direction of the Resident Engineer in consultation with the facility operator.

2. Materials:

All materials used to excavate and prepare trenches shall be supplied by the Contractor and be approved by the facility operator in consultation with the Resident Engineer.

3. Method of Construction:

Excavation – The Contractor shall saw cut and/or break and remove existing roadway which may include

but is not limited to, asphalt, concrete and cobblestone, utilizing approved equipment that leaves a neat straight joint line along the juncture with subsequently replaced pavement. Prior to starting the trenching operation, the contractor shall excavate the appropriate gas main tie-in pits at the extremities of the gas main sections to be replaced. Test pits shall be excavated to determine exact location of all tie-in pits and at appropriate intervals along proposed trench excavation to verify lane and clearances as shown on the contract plans. The tie-in pits shall be adequately protected by the contractor using wood fencing or steel traffic plates until such time when the facility operator has completed the tie-in work. The Contractor shall be permitted to excavate utilizing a combination of machine and hand excavation, as field conditions warrant, and as directed by the facility operator. The trench shall be adjusted so as to provide for a nominal cover on the new gas facilities or as required based on field conditions, applicable specifications, or as directed by the facility operator in consultation with the Resident Engineer. The width of the trench shall be as directed by the facility operator in consultation of the Resident Engineer. The bottom of the trench shall be graded smooth with a minimum cushion of 3 inches of clean sand and in conformance with applicable specification and be compacted, to minimize initial settlement and to avoid "point" support of new gas facilities. All stones projecting into the trench bottom shall be removed, and the voids backfilled before the new gas facilities are installed. Where streets are not to final grade, the cover shall be measured from the final grade, or the existing grade, whichever provides the deeper trench. Excavation in the vicinity of utilities and other structures shall be performed using hand tools. The contractor shall properly dispose of all materials excavated away from site. Size and location of excavation shall be as directed by the facility operator in consultation with the Resident Engineer. Trenches shall be excavated to a depth and size necessary to facilitate the installation of the new gas facility and in conformance with the applicable specification. All existing facilities that are encountered during trench excavating shall be protected in a manner suitable to the facility operator in consultation with the Resident Engineer. Tight sheeting shall be used, as required, based on field conditions and/or when the depth of excavation is equal to or greater than five feet. Skeleton type sheeting will not be permitted. The sheeting required shall be furnished and installed in full compliance with the State of New York and Federal Safety Code requirements and in compliance with applicable specifications and/or as directed by the facility operator in consultation with the Resident Engineer. Care shall be taken that no existing gas facilities or other structures are broken or damaged. Contractor shall excavate all material encountered necessary to facilitate the installation of the new gas facilities, and as directed by the facility operator. Care should be taken to avoid damage to existing utility facilities and structures, and to pavements and their foundations, and to avoid caving or sliding banks within the excavation.

Maintenance of Trench Excavation - Excavated trenches shall be maintained free of debris and kept dry by the contractor. In order to accomplish this, contractor shall, upon completion of excavation and placement of sheeting (as required and/or if depth is equal to or greater than five feet), furnish and install adequate steel plates, as directed by the facility operator in consultation with the Resident Engineer, and posting over the excavated trenches and shall temporarily remove all equipment debris and workers, and relocate barricades in order to open the full width of street to traffic during non-working hours, as required based on DOT requirements. National Grid forces will perform all live gas main connections, dead gas main cut-outs, and/or service work associated with disconnecting and reconnecting from old to new gas main The Contractor shall then, at no additional cost, relocate such barricades barrels, cones and other warning devices and remove steel plates, as and when directed by the facility operator in consultation with the Resident Engineer to facilitate the installation of the new gas facilities. When work is being performed and the excavations are not covered with steel plates, the Contractor shall provide complete and safe access to the trench as may be required, and shall provide construction barricades and maintain traffic at all times as shown or as directed by the facility operator in consultation with the Resident Engineer. The contractor has the responsibility to maintain and set to grade all National Grid hardware during backfill and pavement restoration. Upon completion of installation of the new gas facility, the trench excavation shall be backfilled by the contractor in accordance with Contract requirements and all backfill material shall conform to contract specifications for such purpose.

Pavement and Sidewalk Restoration - After backfilling is completed, the contractor shall install temporary pavement consisting of six inches (6") thick asphaltic concrete mixture in roadway areas or a two inches (2") thick asphaltic concrete mixture in sidewalk areas in order to maintain existing pedestrian and vehicular traffic. This temporary pavement shall be maintained until permanent replacement as specified in contract. Permanent pavement restoration shall be as required by the appropriate contract

specifications and as directed by the Resident Engineer.

4. Method of Measurement:

The quantity to be measured for payment shall be the number of cubic yards (C.Y.) of trench actually excavated, including roadway pavement, base and/or sidewalk concrete removed within the limits of the trench as directed by the Resident Engineer in consultation with the facility operator. The volume occupied by existing pipes or other structures will be deducted from the total volume measured as shown on contract drawing(s) Title: EP-7 SECT. 6.09 GAS SPECIALTY CONTRACTOR WORK, or as encountered based on existing field conditions.

5. Price to Cover:

The unit price bid per cubic yard for excavation shall include the cost of all supervision, labor, material, equipment, insurance and incidentals necessary to complete excavation trenches, including backfill, compaction testing and restoration of trenches and tie-ins pits as specified or shown on the contract, plans. The bid price shall also include the cost of coordinating the sewer and water main work to be performed by the contractor with the gas installation work to be performed by others. The price shall also include, associated maintenance of traffic, and traffic plates and openings and closings of plates as may be required in order to provide access to the facility operator during the new gas facility installation, and installing, removing and maintaining tight sheeting that may be required, cut, break and remove various thickness of surface and base pavement, excavate by hand, furnish, place and compact, in compliance with DOT requirements, clean sand backfill following installation of the gas facility. Any required removing, trucking, storing, and disposing of material shall be deemed included in the unit price. The price shall also include the cost of providing temporary pavement restoration. Permanent pavement restoration shall be deemed included in this item, as required and as directed by the Resident Engineer.

SECTION 6.09a Trench Excavation and Backfill for New Gas Mains and Services (For Con Edison Work Only)

1. Description:

Under this section, the contractor shall furnish all labor, materials, equipment, insurance, permits and incidentals required to break/remove roadway and sidewalk pavement, excavate, backfill and restore gas trenches. The trench to be excavated shall be determined by the size of the gas facility to be installed. The work shall be performed in accordance with applicable specifications, and/or at the direction of the Resident Engineer in consultation with the facility operator.

2. Materials:

All materials used to excavate and prepare trenches shall be supplied by the Contractor and be approved by the facility operator in consultation with the Resident Engineer. Clean sand backfill material shall be used and shall conform to Con Edison specification EO-1181-rev.6, General Specification for Backfilling of Trench and Small Openings.

3. Method of Construction:

Excavation – The Contractor shall saw cut and/or break and remove existing roadway which may include but is not limited to, asphalt, concrete and cobblestone, utilizing approved equipment that leaves a neat straight joint line along the juncture with subsequently replaced pavement. Prior to starting the trenching operation, the contractor shall excavate the appropriate gas main tie-in pits at the extremities of the gas main sections to be replaced. Test pits shall be excavated to determine exact location of all tie-in pits and at appropriate intervals along proposed trench excavation to verify lane and clearances as shown on the contract plans. The tie-in pits shall be adequately protected by the contractor using wood fencing or steel traffic plates until such time when the facility operator has completed the tie-in work. The Contractor shall be permitted to excavate utilizing a combination of machine and hand excavation, as field conditions warrant, and as directed by the facility operator. The trench shall be adjusted so as to provide for a

nominal cover on the new gas facilities or as required based on field conditions, applicable specifications, or as directed by the facility operator in consultation with the Resident Engineer. The width of the trench shall be as directed by the facility operator in consultation of the Resident Engineer. The width and depth of the trench shall conform to Con Edison Gas Operations drawing 309495 rev. 4, Trench Excavation for Gas Mains Up to 350 PSIG, or as directed by the facility operator in consultation of the Resident Engineer. The bottom of the trench shall be graded smooth with a minimum cushion of 3 inches of clean sand and in conformance with applicable specification and be compacted, to minimize initial settlement and to avoid "point" support of new gas facilities. All stones projecting into the trench bottom shall be removed, and the voids backfilled before the new gas facilities are installed. Where streets are not to final grade, the cover shall be measured from the final grade, or the existing grade, whichever provides the deeper trench. Excavation in the vicinity of utilities and other structures shall be performed using hand tools. The contractor shall properly dispose of all materials excavated away from site. Size and location of excavation shall be as directed by the facility operator in consultation with the Resident Engineer. Trenches shall be excavated to a depth and size necessary to facilitate the installation of the new gas facility and in conformance with the applicable specification. All existing facilities that are encountered during trench excavating shall be protected in a manner suitable to the facility operator in consultation with the Resident Engineer. Tight sheeting shall be used, as required, based on field conditions and/or when the depth of excavation is equal to or greater than five feet. Skeleton type sheeting will not be permitted. The sheeting required shall be furnished and installed in full compliance with the State of New York and Federal Safety Code requirements and in compliance with applicable specifications and/or as directed by the facility operator in consultation with the Resident Engineer. Care shall be taken that no existing gas facilities or other structures are broken or damaged. Contractor shall excavate all material encountered necessary to facilitate the installation of the new gas facilities, and as directed by the facility operator. Care should be taken to avoid damage to existing utility facilities and structures, and to pavements and their foundations, and to avoid caving or sliding banks within the excavation.

Maintenance of Trench Excavation - Excavated trenches shall be maintained free of debris and kept dry by the contractor. In order to accomplish this, contractor shall, upon completion of excavation and placement of sheeting (as required and/or if depth is equal to or greater than five feet), furnish and install adequate steel plates, as directed by the facility operator in consultation with the Resident Engineer, and posting over the excavated trenches and shall temporarily remove all equipment debris and workers, and relocate barricades in order to open the full width of street to traffic during non-working hours, as required based on DOT requirements. Con Edison forces will perform all live gas main connections, dead gas main cut-outs, and/or service work associated with disconnecting and reconnecting from old to new gas main The Contractor shall then, at no additional cost, relocate such barricades barrels, cones and other warning devices and remove steel plates, as and when directed by the facility operator in consultation with the Resident Engineer to facilitate the installation of the new gas facilities. When work is being performed and the excavations are not covered with steel plates, the Contractor shall provide complete and safe access to the trench as may be required, and shall provide construction barricades and maintain traffic at all times as shown or as directed by the facility operator in consultation with the Resident Engineer. The contractor has the responsibility to maintain and set to grade all Con Edison hardware during backfill and pavement restoration. Upon completion of installation of the new gas facility, the trench excavation shall be backfilled by the contractor in accordance with Contract requirements and all backfill material shall conform to contract specifications for such purpose.

Pavement and Sidewalk Restoration - After backfilling is completed, the contractor shall install temporary pavement consisting of six inches (6") thick asphaltic concrete mixture in roadway areas or a two inches (2") thick asphaltic concrete mixture in sidewalk areas in order to maintain existing pedestrian and vehicular traffic. This temporary pavement shall be maintained until permanent replacement as specified in contract. Permanent pavement restoration shall be as required by the appropriate contract specifications and as directed by the Resident Engineer.

4. Method of Measurement:

The quantity to be measured for payment shall be the number of cubic yards (C.Y.) of trench actually excavated, including roadway pavement, base and/or sidewalk concrete removed within the limits of the trench as directed by the Resident Engineer in consultation with the facility operator. The volume occupied

by existing pipes or other structures will be deducted from the total volume measured as shown on contract drawing(s) Title: EP-7 SECT. 6.09 GAS SPECIALTY CONTRACTOR WORK, or as encountered based on existing field conditions.

5. Price to Cover:

The unit price bid per cubic yard for excavation shall include the cost of all supervision, labor, material, equipment, insurance and incidentals necessary to complete excavation trenches, including backfill, compaction testing and restoration of trenches and tie-ins pits as specified or shown on the contract, plans. The bid price shall also include the cost of coordinating the sewer and water main work to be performed by the contractor with the gas installation work to be performed by others. The price shall also include, associated maintenance of traffic, and traffic plates and openings and closings of plates as may be required in order to provide access to the facility operator during the new gas facility installation, and installing, removing and maintaining tight sheeting that may be required, cut, break and remove various thickness of surface and base pavement, excavate by hand, furnish, place and compact, in compliance with DOT requirements, clean sand backfill following installation of the gas facility. Any required removing, trucking, storing, and disposing of material shall be deemed included in the unit price. The price shall also include the cost of providing temporary pavement restoration. Permanent pavement restoration shall be deemed included in this item, as required and as directed by the Resident Engineer.

GAS COST SHARING STANDARD SPECIFICATIONS
SCHEDULE GCS-A

Average rate charged by utility companies to Disconnect and Reconnect Gas Services:

1. National Grid - $586.90 per Service/and Visit
2. Con Edison - $524.00 per Service/and Visit

IV - STANDARD SKETCHES; GAS COST SHARING WORK

Hereinafter attached are the following Standard Sketches for Gas Cost Sharing Work:

Sketch No. 1 - Support Requirements For Gas Mains And Services Crossing Excavation Greater Than 4' - 0" Wide At Any Angle

Sketch No. 1A - Support Requirements For Gas Mains Over 16" Diameter Up To And Including 48" Diameter Crossing Excavation At Any Angle

Sketch No. 2 - Typical Methods Of Measurement For Gas Crossings

Sketch No. 3 - Utility Crossings During Catch Basin Chute Connection Pipe Installation

Sketch No. 4 - Utility Crossings During Catch Basin Chute Connection Pipe Installation (Extra Depth)

Sketch No. 5 - Gas Main Encroachment On And/Or Parallel To Excavation Of Unsheeted Trench

GAS COST SHARING WORK (SKETCH NO. 1)

SUPPORT REQUIREMENTS FOR GAS MAINS AND SERVICES CROSSING EXCAVATION GREATER THAN 4'-0" WIDE AT ANY ANGLE

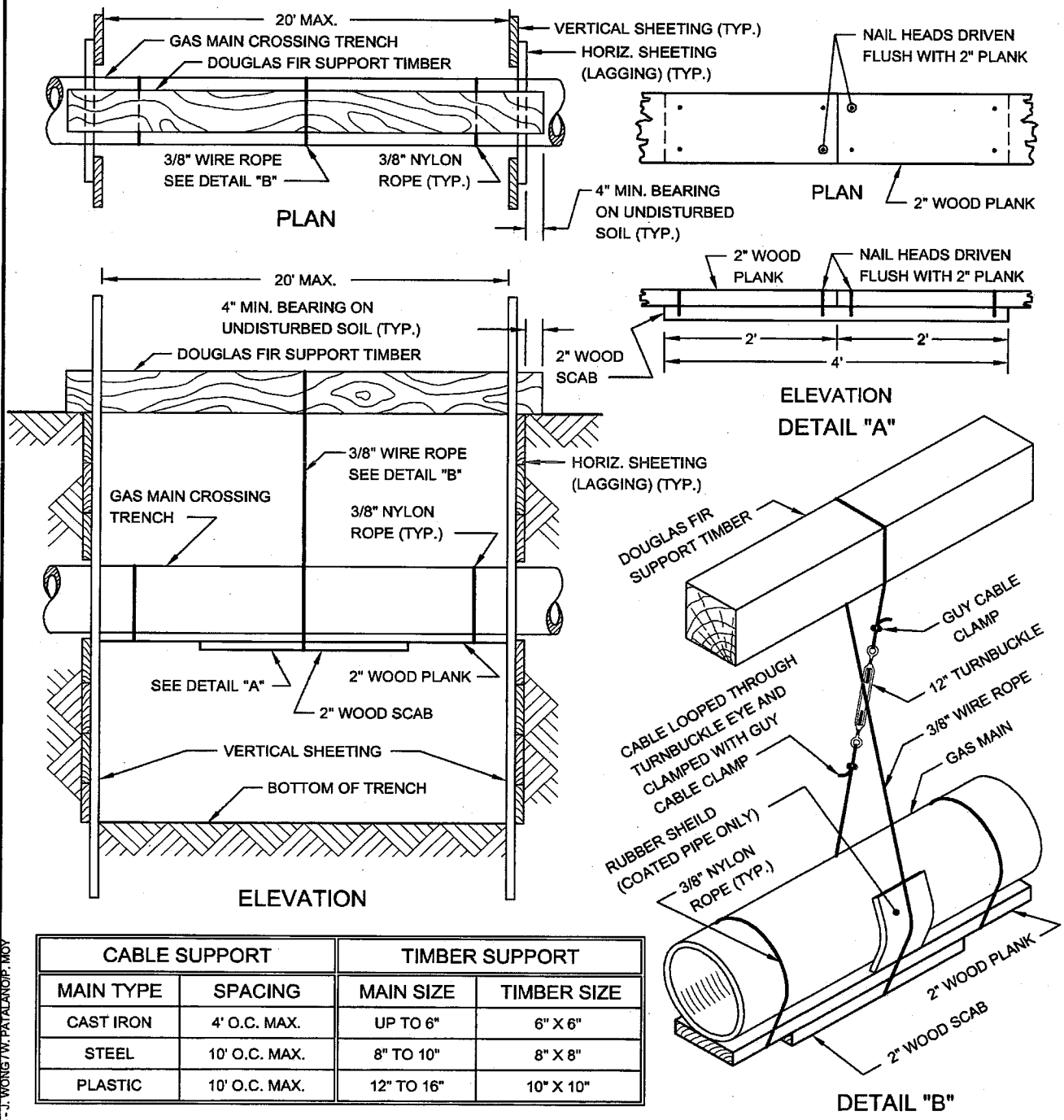

CABLE SUPPORT		TIMBER SUPPORT	
MAIN TYPE	SPACING	MAIN SIZE	TIMBER SIZE
CAST IRON	4' O.C. MAX.	UP TO 6"	6" X 6"
STEEL	10' O.C. MAX.	8" TO 10"	8" X 8"
PLASTIC	10' O.C. MAX.	12" TO 16"	10" X 10"

REVISED OCT. 2004 - L. ADRIEN
REVISED JUNE 1998 - J. WONG / W. PATALANO/P. MOY

GAS COST SHARING WORK (SKETCH NO. 1A)

SUPPORT REQUIREMENTS FOR GAS MAINS OVER 16" DIAMETER UP TO AND INCLUDING 48" DIAMETER CROSSING EXCAVATION AT ANY ANGLE

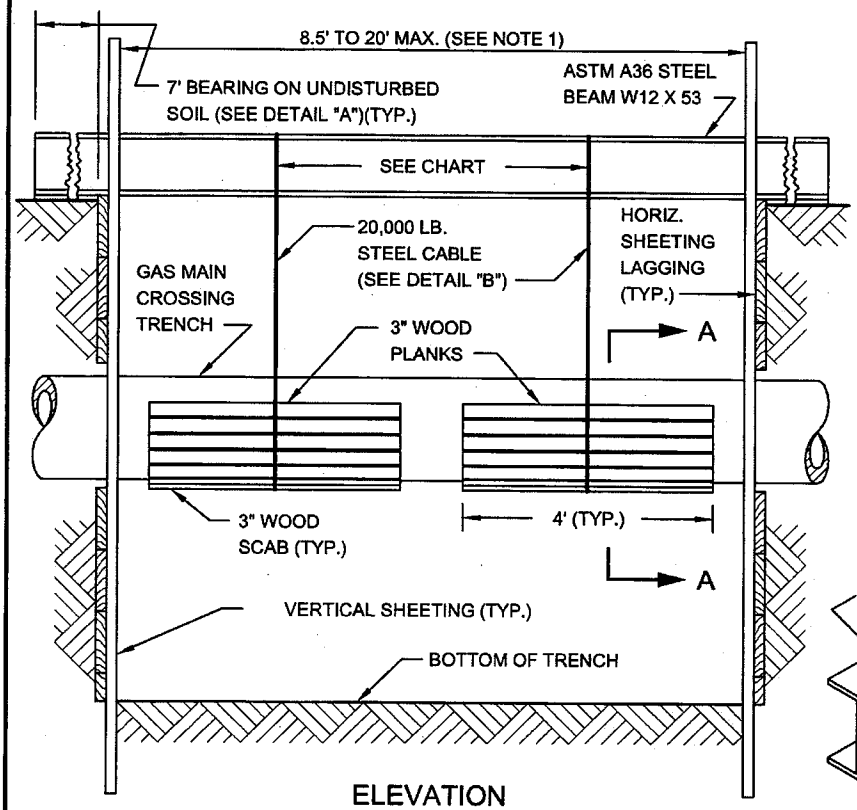

ELEVATION

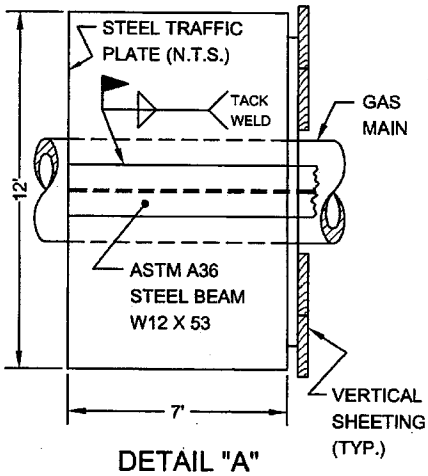

DETAIL "A"

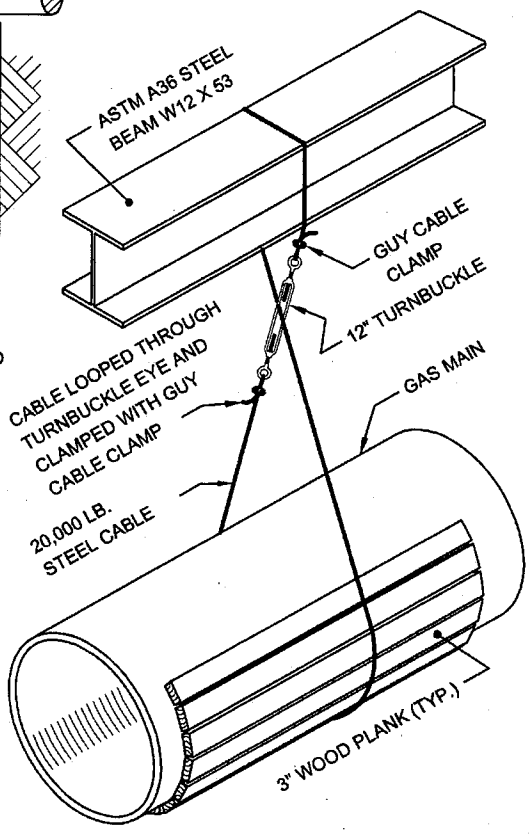

DETAIL "B"

CABLE SUPPORT	
MAIN TYPE	SPACING
CAST IRON	4' O.C. MAX.
STEEL	10' O.C. MAX.

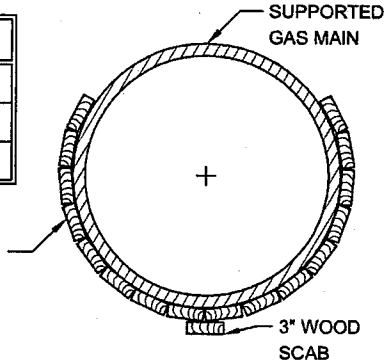

SECTION A-A

NOTES:

(1) NO SUPPORT IS REQUIRED FOR GAS MAINS OVER 16" DIA. UP TO AND INCLUDING 48" DIA. CROSSING TRENCHES LESS THAN 8.5' WIDE.

(2) UNDERMINE A MAXIMUM OF 8.5 L.F. OF CAST IRON GAS MAIN AT A TIME.

(3) SET STEEL CABLE OVER 3" WOOD PROTECTIVE PLANKS AND PLACE AN ADDITIONAL 3" SCAB ON THE BOTTOM OF THE GAS MAIN.

(4) ADJUST STEEL CABLE UNTIL DEAD WEIGHT OF THE UNDERMINED GAS MAIN HAS BEEN TAKEN UP BY THE OVERHEAD STEEL BEAM SUPPORT.

(5) ALL SUPPORTS AND STEEL CABLES CAN BE REOMVED ONLY AFTER THE REQUIRED BACKFILL (AROUND AND BELOW GAS MAIN) HAS BEEN COMPACTED IN ACCORDANCE WITH NEW YORK CITY STANDARDS AND AT THE DIRECTIONS OF THE ENGINEER.

REVISED OCT. 2004 - L. ADRIEN
REVISED JUNE 1998 - J. WONG / W. PATALANOP. MOY

GAS COST SHARING WORK (SKETCH NO. 2)

TYPICAL METHODS OF MEASUREMENT FOR GAS CROSSINGS

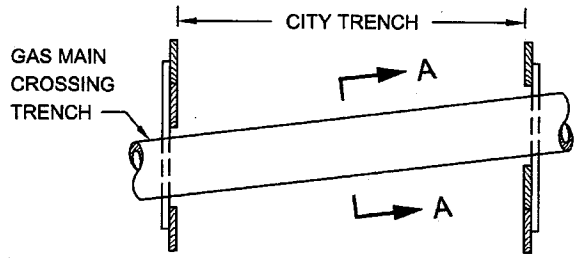

SINGLE FACILITY CROSSING

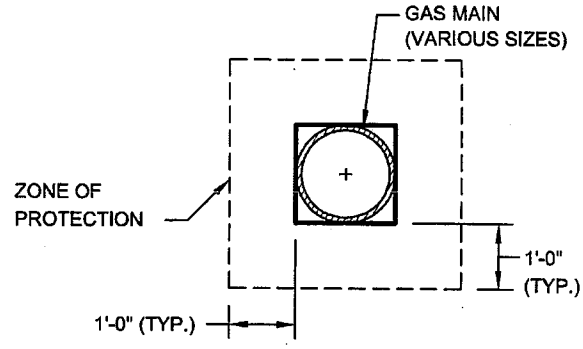

SECTION A-A

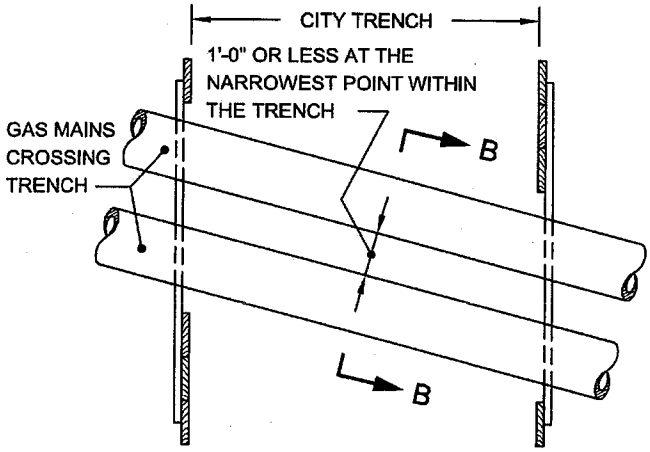

MULTIPLE FACILITIES
(GAS MAINS AT SAME ELEVATION)

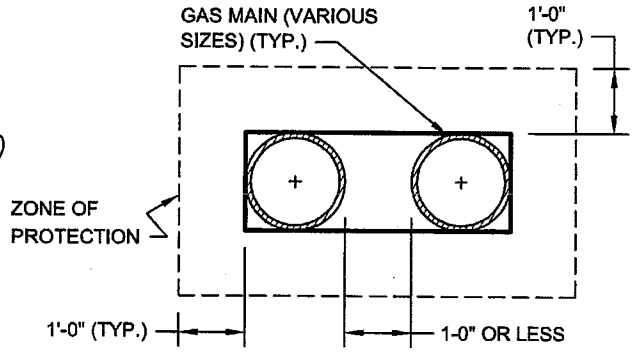

SECTION B-B

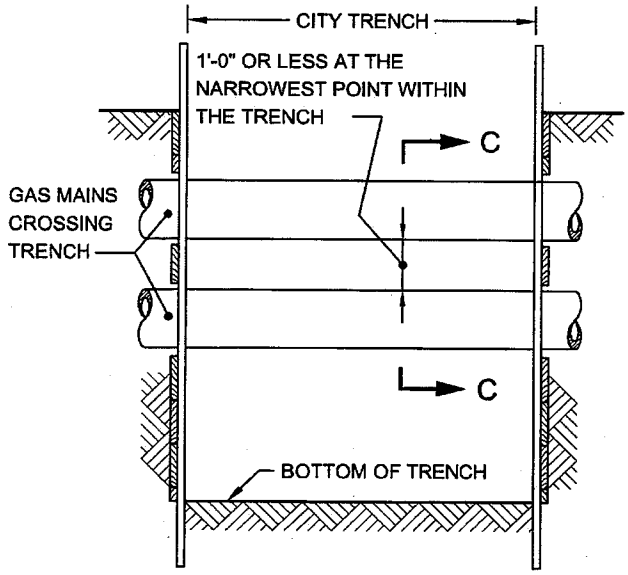

MULTIPLE FACILITIES
(ONE CROSSING AT DIFFERENT ELEVATIONS)

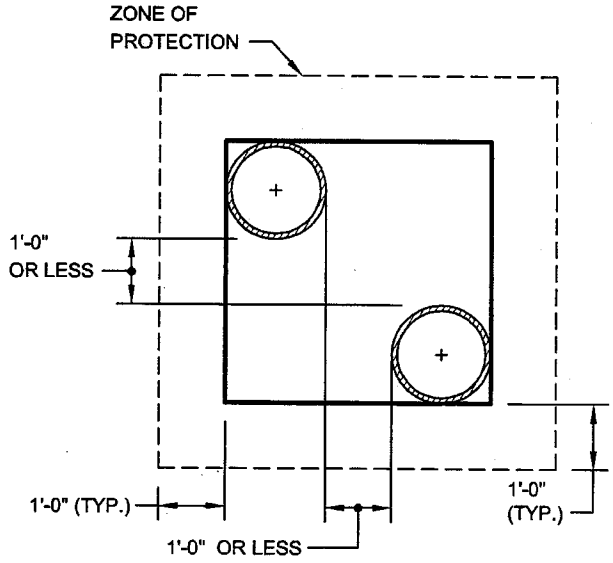

SECTION C-C

NOTE:

GAS MAINS MAY OR MAY NOT BE PARALLEL TO EACH OTHER.

REVISED SEPT. 2004 - L. ADRIEN
REVISED SEPT. 2004 - J. WONG/M. PATALANO/P. MOY

GAS COST SHARING WORK (SKETCH NO. 3)

UTILITY CROSSINGS DURING CATCH BASIN CHUTE CONNECTION PIPE INSTALLATION

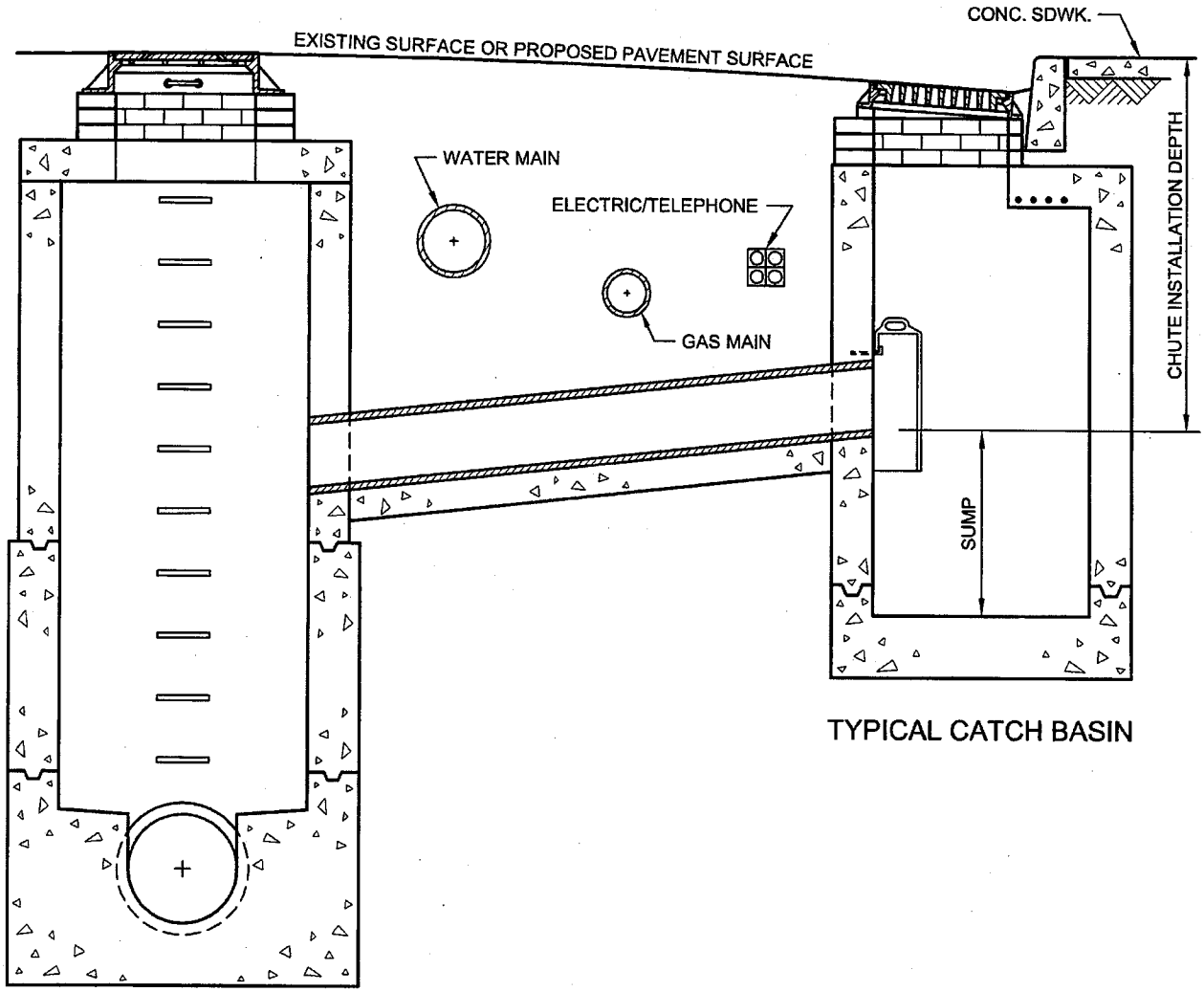

TYPICAL CATCH BASIN

TYPICAL SEWER MANHOLE

REVISED OCT. 2004 - L. ADRIEN
REVISED OCT. 1998 - J. WONG/W. PATALANO/P. MOY

GAS COST SHARING WORK (SKETCH NO. 4)

UTILITY CROSSINGS DURING CATCH BASIN CHUTE CONNECTION PIPE INSTALLATION (EXTRA DEPTH)

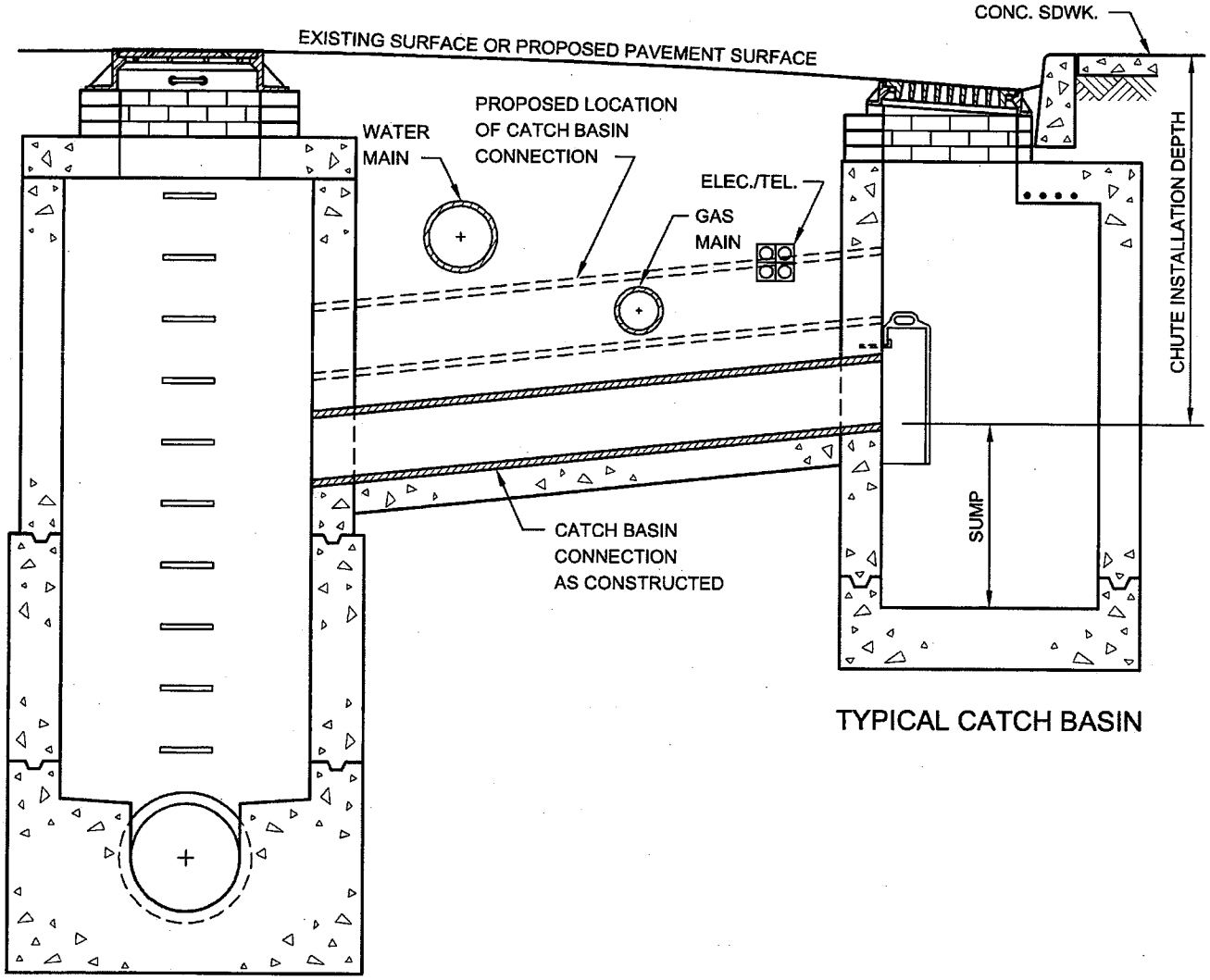

TYPICAL CATCH BASIN

TYPICAL SEWER MANHOLE

REVISED OCT. 2004 - L. ADRIEN
REVISED OCT. 1998 - J. WONG/W. PATALANO/P. MOY

GAS COST SHARING WORK (SKETCH NO. 5)

GAS MAIN ENCROACHMENT ON AND/OR PARALLEL TO EXCAVATION OF UNSHEETED TRENCH

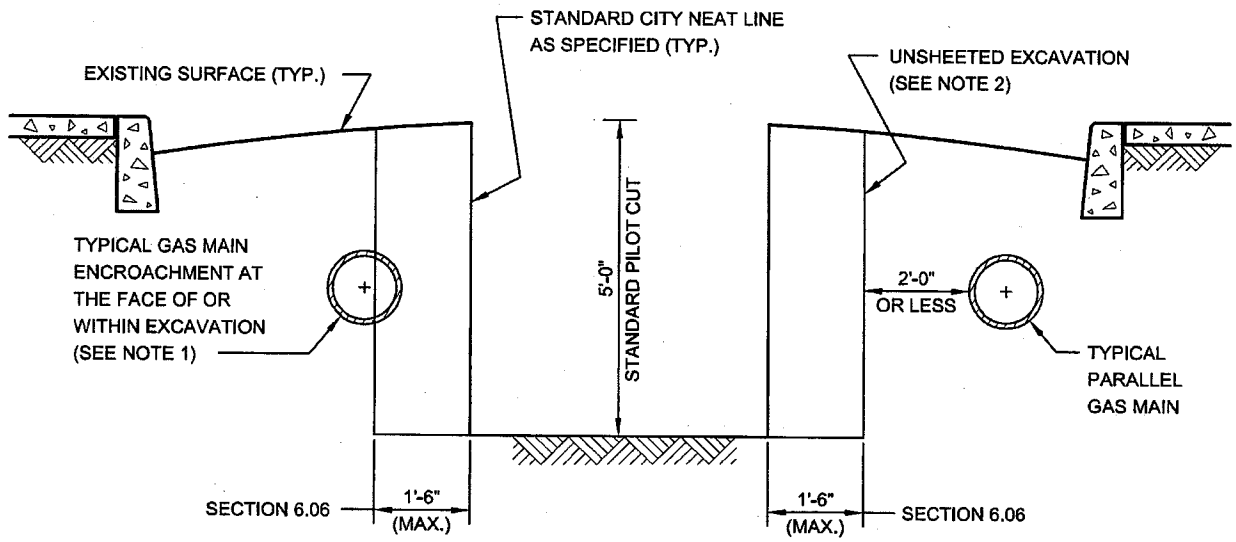

NOTES:

(1) GAS MAIN LOCATED AS SHOWN MAY HAVE TO BE REMOVED BY THE FACILITY OPERATOR PRIOR TO THE START OF CITY EXCAVATION, OTHERWISE, THE CONTRACTOR WILL BE PAID UNDER SECTION 6.06 FOR THE SAID WORK. IF GAS MAIN IS ABANDONED THEN SECTION 6.03 SHALL APPLY.

(2) EIGHTEEN (18) INCHES FROM STANDARD NEAT LINE IS THE MAXIMUM ALLOWABLE WIDTH OF AREA THAT MAY BE DISTURBED OR EXCAVATED DURING INSTALLATION OF CERTAIN TYPES OF SHEETING SYSTEMS THAT MEET THE REQUIREMENTS OF THE STANDARD SPECIFICATIONS OF THE DEPARTMENT OF DESIGN AND CONSTRUCTION OF THE CITY OF NEW YORK.

REVISED OCT. 2004 - L. ADRIEN
REVISED OCT. 1998 - J. WONG/W. PATALANO/P. MOY

V - PRELIMINARY GAS WORK TO BE PERFORMED BY FACILITY OPERATOR

APPLICABLE TO ALL GAS DRAWINGS:

- ALL RELOCATION WORK SHOWN IN THIS SECTION IS TO BE PERFORMED BY FACILITY OPERATOR.
- ALL SUPPORT AND PROTECTION WORK IS TO BE PERFORMED BY CITY CONTRACTOR.
- IF ADDITIONAL INFORMATION IS NEEDED REGARDING THE FACILITY OPERATOR RELOCATION WORK, THE CONTRACTOR IS ADVISED TO CONTACT THE GAS COMPANY REPRESENTATIVE:

MR. O'NEILL WRIGHT
CONSOLIDATED EDISON
4 IRVING PLACE, 12TH FLOOR SWC
NEW YORK, NY 10003
TEL.: 212-460-3870

(NO TEXT IN THIS AREA, TURN PAGE)

GAS FACILITY COST ALLOCATION AGREEMENT
PROJECT NO.

CAPITAL GAS MAIN INSTALLATION

SHEET #	LOC.	ON STREET	FROM	TO	ITEM	SIZE	TYPE	LENGTH	REIMB LENGTH	REMARKS
1	A-B	Cross Is. Pkwy	90th Avenue	89th Avenue		8	PE	106		Retire 100' of 8" HP PE
1	B-C	89th Avenue	Cross Is. Pkwy	242nd Street		1-1/4	PE	60		Retire 67' of 1-1/4" HP PE, INS 2" STL
1	B-D	Cross Is. Pkwy	89th Avenue	88th Drive		8	PE	250		Retire 250' of 8" HP PE
1	D-E	88th Drive	Cross Is. Pkwy	242nd Street		1-1/4	PE	62		Retire 72' of 1-1/4" HP PE, INS 2" STL
1-2	D-F	Cross Is. Pkwy	88th Drive	88th Road		8	PE	252		Retire 252' of 8" HP PE
2	F-G	88th Road	Cross Is. Pkwy	242nd Street		2	PE	39		Retire 44' of 1-1/4" HP PE, INS 2" STL
2	F-H	Cross Is. Pkwy	88th Road	88th Avenue		8	PE	272		Retire 272' of 8" HP PE
2	H-I	88th Avenue	Cross Is. Pkwy	242nd Street		2	PE	25		
2	H-J	Cross Is. Pkwy	88th Avenue	87th Avenue		8	PE	231		Retire 86' of 8" HP PE Retire 140' 6" HP STL
2	J-K	Cross Is. Pkwy	87th Avenue	86th Road		8	PE	54		Retire 50' of 6" HP STL
2-3	J-L	87th Avenue	Cross Is. Pkwy	241st Street		2	PE	557		Retire 561' of 1-1/4" HP PE, INS 2" STL
3	L-M	241st St.	87th Avenue	86th Road		2	PE	79		Retire 42' of 2" HP PE
3	L-N	87th Avenue	241st Street	239th Street		2	PE	404		Retire 427' of 1-1/4" HP PE, INS 2" STL
3	N-O	239th Street	87th Avenue	86th Avenue		1-1/4	PE	109		Retire 95' of 1-1/4" HP PE

EP7 - 27A1

EP7-2742

PUBLIC IMPROVEMENT ENGINEERING - QUEENS
REMAINING LIFE CALCULATION (WEIGHTED)
PROJECT NO. SEQ200531

Current Year : 2017

MAIN DESC	SIZE	KIND	REIMB LENGTH	INSTALL DATE	BASE LIFE 70 OR 90 YEARS	AGE TO CURRENT DATE	REMAINING LIFE		PERCENT TO TOTAL LENGTH	REMAINING LIFE % (WEIGHTED)
							YEARS	PERCENT		
A-B	8	PE	106	2015	70	2	68	97.14	4.28	4.16
B-C	1-1/4	PE	60	2015	70	2	68	97.14	2.42	2.35
B-D	8	PE	250	2015	70	2	68	97.14	10.10	9.81
D-E	1-1/4	PE	62	1988	70	29	41	58.57	2.51	1.47
D-F	8	PE	252	2015	70	2	68	97.14	10.18	9.89
F-G	2	PE	39	2015	70	2	68	97.14	1.58	1.53
F-H	8	PE	272	2015	70	2	68	97.14	10.99	10.68
H-J	8	PE	91	2015	70	2	68	97.14	3.68	3.57
	6	STL	140	1940	70	77	0	0.00	5.66	0.00
J-K	6	STL	54	1940	70	77	0	0.00	2.18	0.00
J-L	2	PE	557	1977	70	40	30	42.86	22.51	9.65
L-M	2	PE	79	1998	70	19	51	72.86	3.19	2.33
L-N	2	PE	404	1991	70	26	44	62.86	16.32	10.26
N-O	1-1/4	PE	109	2002	70	15	55	78.57	4.40	3.46
TOTALS			2,475						100.00	69.16

VI - LISTING OF APPROXIMATE LOCATIONS OF EP-7 BID ITEMS QUANTITIES

(NO TEXT IN THIS AREA, TURN PAGE)

SCOPE OF WORK
SUPPORT AND PROTECTION
FOR CONTRACT NUMBER SEQ-200531

The City of New York Department of Design and Construction is planning to install sewers and/or water mains and all appurtenances in various locations in The City of New York along with all work incidental thereto.

6.01.1 - Support & Protect Gas Main Crossing Sewer Up To 24" In Diameter (Ea.)

1 in 89th Ave. I/O Cross Is. Pkwy West Service Rd.
1 in 88th Dr., I/O Cross Is. Pkwy West Service Rd
1 in 88th Rd., I/O Cross Is. Pkwy West Service Rd
1 in 88th Ave., I/O Cross Is. Pkwy West Service Rd

6.01.5 - Support & Protect Gas Main Crossing Sewer 60" In Diameter (Ea.)

1 in 87th Ave., I/O Cross Is. Pkwy
1 in 241st St., I/O 87th Ave.
1 in 239th St., I/O 87th Ave.

6.01.8 - Support & Protect Gas Services Crossing Trenches And/Or Excavations (Ea.)

1 in 87th Ave., F/O Hse. 241-49
1 in 87th Ave., F/O Hse. 241-47
1 in 87th Ave., F/O Hse. 241-45
1 in 87th Ave., F/O Hse. 241-41
1 in 87th Ave., F/O Hse. 241-39
1 in 87th Ave., F/O Hse. 241-33
1 in 87th Ave., F/O Hse. 241-31
1 in 87th Ave., F/O Hse. 241-27
1 in 87th Ave., F/O Hse. 241-25
1 in 87th Ave., F/O Hse. 241-21
1 in 87th Ave., F/O Hse. 241-19
1 in 87th Ave., F/O Hse. 241-15
1 in 87th Ave., F/O Hse. 241-11
1 in 87th Ave., F/O Hse. 241-09
1 in 87th Ave., F/O Hse. 241-07
1 in 87th Ave., F/O Hse. 241-05
1 in 87th Ave., F/O Hse. 241-19
1 in 87th Ave., F/O Hse. 241-11
1 in 239th St., Opposite Hse. 87-06
1 in 239th St., Opposite Hse. 87-10

6.03 - Removal Of Abandoned Gas Facilities. All Sizes (L.F.)

2,044 in Various Locations As Required

SCOPE OF WORK
SUPPORT AND PROTECTION
FOR CONTRACT NUMBER SEQ-200531

The City of New York Department of Design and Construction is planning to install sewers and/or water mains and all appurtenances in various locations in The City of New York along with all work incidental thereto.

6.03.1a- Removal Of Abandoned Gas Facilities With Possible Coal Tar Wrap. All Sizes. (For Con Edison Work Only) (L.F.)

621 in Various Locations As Required

6.04 - Adjust Hardware To Grade Using Spacer Rings / Adaptor (Street Repaving) (Ea.)

9 in Various Locations As Required

6.05 - Adjust Hardware To Grade By Resetting (Road Reconstruction) (Ea.)

3 in I/O 87TH Ave., & Cross Is. Pkwy West Service Rd.

6.06 - Special Care Excavation & Backfilling (C.Y.)

400 CY In Various Locations As Required, Including But Not Limited To All Gas Services Crossing Unsheeted Water Main Trenches.

6.07 - Test Pits For Gas Facilities (C.Y.)

50 CY in Various Locations As Required.

NO TEXT ON THIS PAGE

HAZ - PAGES

SPECIFICATIONS FOR HANDLING, TRANSPORTATION AND DISPOSAL OF NONHAZARDOUS AND POTENTIALLY HAZARDOUS CONTAMINATED MATERIALS

NOTICE

THE PAGES CONTAINED IN THIS SECTION ARE ISSUED FOR THE PURPOSE OF SPECIFYING THE REQUIREMENTS OF THE CONTRACT DOCUMENTS AND HEREBY MADE PART OF SAID CONTRACT DOCUMENTS.

(NO TEXT ON THIS PAGE)

SPECIFICATIONS FOR HANDLING, TRANSPORTATION AND DISPOSAL OF NON-HAZARDOUS AND POTENTIALLY HAZARDOUS CONTAMINATED MATERIALS

Storm Sewer Extensions in Cross Island Parkway West Service Road between 87th Avenue and 88th Avenue, etc.

BOROUGH OF QUEENS
CITY OF NEW YORK

Capital Project ID: SEQ200531

Prepared By:

Department of Design and Construction

30-30 Thomson Avenue, 3rd Floor
Long Island City, New York 11101

September 1, 2017

Table of Contents

ITEM 8.01 C1 HANDLING, TRANSPORTING, & DISPOSAL OF NON-HAZARDOUS CONTAMINATED SOILS ..... HAZ. - 1

ITEM 8.01 C2 SAMPLING AND TESTING OF CONTAMINATED/ POTENTIALLY HAZARDOUS SOIL FOR DISPOSAL PARAMETERS ..... HAZ. - 7

ITEM 8.01 H HANDLING, TRANSPORTING, AND DISPOSAL OF HAZARDOUS SOILS ..... HAZ. - 9

ITEM 8.01 S HEALTH AND SAFETY ..... HAZ. - 15

ITEM 8.01 W1 REMOVAL, TREATMENT, AND DISCHARGE/DISPOSAL OF CONTAMINATED WATER ..... HAZ. - 20

ITEM 8.01 W2 SAMPLING AND TESTING OF CONTAMINATED WATER ..... HAZ. - 27

ATTACHMENT 1: NYCDEP LIMITATIONS FOR DISCHARGE TO STORM, SANITARY/COMBINED SEWER ..... HAZ. - 29

ATTACHMENT 2: APPLICABLE REGULATIONS ..... HAZ. - 32

ATTACHMENT 3: DEFINITIONS ..... HAZ. - 35

ATTACHMENT 4: PHASE II SUBSURFACE CORRIDOR INVESTIGATION REPORT ..... HAZ. - 37

ITEM 8.01 C1 HANDLING, TRANSPORTING, & DISPOSAL OF NON-HAZARDOUS CONTAMINATED SOILS

8.01 C1.1 WORK TO INCLUDE

General: This work shall consist of the handling, transportation, and disposal of non-hazardous contaminated soils. The materials covered by this specification are soils that are contaminated with petroleum or chemical products but cannot be classified as hazardous waste. For the purpose of this specification, soil shall be defined as any material excavated below the pavement and base for pavement.

Non-hazardous contaminated soils are defined as soils exhibiting one or more of the following characteristics:

- Elevated Photo-Ionization Detector (PID) readings, subsequently confirmed by lab analysis
- Visual evidence of contamination
- Petroleum and/or chemical odors
- Soils that have been documented as contaminated in previous environmental reports

Non-hazardous contaminated soils must be stockpiled at an off-site approved location or secured on-site by the Contractor, meeting all required Federal, State and Local stipulations. Sampling and laboratory analysis must be conducted to determine if the soils are hazardous, unless the alternative procedure as defined under subsection 8.01 C1.1 A.5 has been agreed upon by treatment facilities. Contaminated soils determined to be non-hazardous shall be handled in accordance with the specifications herein for Item 8.01 C1. Contaminated soils determined to be hazardous shall be handled in accordance with the specifications for Item 8.01 H – Handling, Transporting and Disposal of Hazardous Soils.

The Contractor shall retain the services of an independent Environmental Consultant, as specified under Item 8.01 S – Health and Safety, to oversee the work required under this Item.

Non-hazardous soils shall be delivered to the disposal or treatment facility within thirty (30) calendar days after excavation.

The Contractor shall conduct sampling and analysis of the impacted soils as specified under Item 8.01 C2 – Sampling and Testing of Contaminated/Potentially Hazardous Soils for Disposal Parameters. The laboratory results shall be forwarded to DDC Program Management, Office of Environmental and Geotechnical Services (OEGS) for review to determine if the soils will be handled and disposed of as contaminated regulated soils or hazardous waste. No other soils shall be sampled or tested without the DDC's approval or direction.

The Contractor shall ensure that all operations associated with the handling, sampling, loading, transportation, and disposal of non-hazardous contaminated soils are in compliance with all applicable Federal, State, and City statutes and regulations.

The Contractor shall document the excavation, handling, transportation and disposal of non-hazardous contaminated soils. The Contractor shall supply all equipment, material and labor required to conduct the specified work of this Item.

A. Material Handling Plan: Within forty-five (45) calendar days after award of Contract, the Contractor shall submit to the Program Management, OEGS for review, a Material Handling Plan (MHP). The MHP must be approved by the Program Management, OEGS, prior to the Contractor's commencement of work. The MHP shall, at a minimum, consist of:

1. The Contractor's procedures for identifying non-hazardous contaminated soils during excavation, including the specific model and manufacturer of intended organic vapor monitoring equipment and calibration procedures to be used. It should also include the training and experience of the personnel who will operate the equipment.
2. The Contractor's procedures for safely handling non-hazardous contaminated soils. The procedures must include personnel safety and health as well as environmental protection considerations.
3. Name, address, New York State Department of Health's (DOH) Environmental Laboratories Accreditation Program (ELAP) status and telephone number of the proposed laboratory for analysis of representative soil samples. The ELAP for the intended analysis must approve the laboratory.
4. Identification of the Contractor's proposed waste transporter(s). This information shall include:

    a. Name and Waste Transporter Permit Number

    b. Address

    c. Name of responsible contact for the hauler

    d. Telephone number for the contact

    e. Any and all necessary permit authorizations for each type of waste transported

    f. Previous experience in performing the type of work specified herein
5. All staging/stockpiling areas (if stockpiling areas are intended and available), or alternate procedures that will be used. Alternate procedures may include, but are not limited to, agreements from the intended disposal or treatment facilities to accept boring data and/or analytical data previously obtained during the site characterization so that materials may be directly loaded into vehicles for shipment to the disposal facility.
6. A backup facility should the staging/stockpile areas become unavailable, insufficient in area or not be present by some other unforeseen difficulty.
7. Identification of the Contractor's two proposed Treatment Storage or Disposal (TSD) facilities for non-hazardous contaminated soils (primary and back-up) for final disposal of the soils. The primary TSD shall be an approved soil recycling/treatment facility. The backup facility may be a recycling/treatment facility or a New York State Department of Environmental Conservation (DEC) approved lined landfill or other facility approved by DEC to accept this material. The information required for each facility shall include:

    a. Facility name and the State identification number

        (1) Facility location

        (2) Name of responsible contact for the facility

        (3) Telephone number for contact

        (4) Signed letter of agreement to accept waste as specified in this contract

        (5) Unit of measure utilized at facility for costing purposes

    b. A listing of all permits, licenses, letters of approval, and other authorizations to operate, which are currently held and valid for the proposed facility.

c. A listing of all permits, licenses, letters of approval, and other authorizations to operate which have been applied for by the proposed facility but not yet granted or issued.

d. The Contractor shall specify and describe the disposal/containment unit(s) that the proposed facility will use to manage the waste. The Contractor shall identify the capacity available in the units and the capacity reserved for the subject waste.

e. The Contractor shall provide the date of the proposed facility's last compliance inspection.

f. A list of all active (unresolved) compliance orders (or agreements), enforcement notices, or notices of violations issued to the proposed facility shall be provided. The source and nature of the cause of violation shall be stated, if known.

8. Description of all sampling and field/laboratory analyses that will be needed to obtain disposal facility approval.

8.01 C1.2 MATERIALS

A. Containers shall be as required in the United State Department of Transportation (DOT) regulations.

B. Polyethylene to be placed under (20 mil. thickness minimum) and over (10 mil. thickness minimum) soil piles.

C. The Contractor shall assure that the waste hauler's appropriate choice of vehicles and operating practices shall prevent spillage or leakage of contaminated material from occurring en route.

D. The Contractor shall provide, install and maintain any temporary loading facilities on site as required until completion of material handling activities. The location and design of any facilities shall be included in the MHP and be approved by the Program Management, OEGS.

8.01 C1.3 CONSTRUCTION DETAILS

A. Material Handling

1. Immediately after excavation of non-hazardous contaminated soil the Contractor shall:

   a. Load material directly onto trucks/tankers/roll offs for disposal off site; or

   b. If interim stockpiling is required, place on a minimum of 20 mil. or equivalent plastic ground cloth and cover by minimum of 10 mil. polyethylene sheeting or equivalent to protect against leaching or runoff of contaminants into groundwater or stormwater. Weight or secure the sheeting by appropriate means and seal seams as approved by the DDC to prevent tearing or removal by weather. Grade surrounding surface to provide for positive drainage away from pile. Stockpile shall not exceed 100 cubic yards.

2. Institute appropriate procedures and security measures to ensure the protection of site personnel and the public from contaminated materials as described in the approved MHP and Item 8.01 S - Health and Safety.

3. Any soil encountered that appears to contain unknown contaminants (based on visual, odor, or other observation), or that vary substantially from the material originally identified must be segregated in stockpiles and the independent Environmental

Consultant promptly notified. Construct stockpiles to the same requirements as stated in subsection A.1.b above.

4. Provide any dewatering that is necessary to complete the work. Contaminated water shall be disposed of in accordance with Item 8.01 W1 – Removal, Treatment and Discharge/Disposal of Contaminated Water.

5. Provide and operate field organic vapor test equipment, a PID or a flame ionization detector (FID), to detect general organic vapor levels at intervals of approximately fifty (50) cubic yards of soil excavated, when visual or odor observations indicate the material may substantially differ from the soil previously excavated and/or as directed by the independent Environmental Consultant.

B. Off-Site Transportation to Disposal or Treatment Facility

1. General

a. The Contractor shall furnish all labor, equipment, supplies and incidental costs required to transport contaminated material from the work area to the off-site disposal or treatment facility, and any other items and services required for transporting contaminated material for disposal at an off-site facility.

b. The Contractor shall submit the name and location of the facility where an off-site scale is located. The Contractor shall also submit a plan to the DDC for review outlining procedures on controlling trucks leaving the work site and en-route to the off-site scale. The Contractor shall be responsible for tracking all material/vehicles from the site to the off-site scale.

c. The Contractor shall provide to the DDC certified tare and gross weight slips for each load received at the accepted facility which shall be attached to each returned manifest.

d. The Contractor shall coordinate the schedule for truck arrival and material deliveries at the job site to meet the approved project schedule.

e. The Contractor shall inspect all vehicles leaving the project site to ensure that contaminated soils adhering to the wheels or undercarriage are removed prior to the vehicle leaving the site.

f. The Contractor shall obtain letters of commitment from the waste haulers and the treatment, disposal or recovery facility to haul and accept shipments. The letter shall indicate agreement to handle and accept the specified estimated quantities and types of material during the time period specified in the project schedule and any time extension as deemed necessary.

g. **The Program Management, OEGS shall review and approve waste profiles before transportation to the TSD facility.**

2. Hauling

a. The Contractor shall coordinate manifesting, placarding of shipments, and vehicle decontamination. All quantities shall also be measured and recorded upon arrival at the disposal or treatment facility. If any deviation between the two records occurs, the matter is to be reported immediately to the DDC and to be resolved by the Contractor to the satisfaction of the DDC.

b. The Contractor shall be held responsible, at its own cost for any and all actions necessary to remedy situations involving material spilled in transit or mud and dust tracked off-site.

c. The Contractor shall ensure that trucks are protected against contamination by properly covering and lining them with compatible material (such as polyethylene) or by decontaminating them prior to and between acceptances of loads.

d. The Contractor shall be responsible for inspecting the access routes for road conditions, overhead clearance, and weight restrictions.

e. The Contractor shall only use the transporter(s) identified in the MHP for the performance of work. Any use of substitute or additional transporters must have previous written approval from the Program Management, OEGS at no additional cost to the City.

f. The Contractor shall develop, document, and implement a policy for accident prevention.

g. The Contractor shall not combine contaminated materials from other projects with material from this project.

h. No material shall be transported until approved by the DDC.

3. Off-Site Disposal

a. The Contractor shall use only the facility(ies) identified in the MPH for the performance of the work. Substitutions or additions shall not be permitted without prior written approval from the Program Management, OEGS, and if approved shall be at no extra cost to the City.

b. The Contractor shall be responsible for acceptance of the materials at an approved facility, for ensuring that the facility is properly permitted to accept the stated materials, and for ensuring that the facility provides the stated treatment and/or disposal services.

c. The DDC reserves the right to contact and visit the disposal or treatment facility and regulatory agencies to verify the agreement to accept the stated materials and to verify any other information provided.

d. In the event that the identified and approved facility ceases to accept the stated materials or the facility ceases operations, it is the Contractor's responsibility to locate an alternate approved and permitted facility(ies) for accepting materials. The alternate facility(ies) must be approved in writing by the DDC in the same manner and with the same requirements as for the original facility(ies). This shall be done at no extra cost or delay to the City.

e. The Contractor shall obtain manifest forms, and complete the shipment manifest records required by the appropriate regulatory agencies for verifying the material and quantity of each load in unit of volume and weight. Copies of each manifest shall be submitted to the DDC within four (4) business days following shipment, and within three (3) business days after notification of receipt of the facility. Any manifest discrepancies shall be reported immediately to the DDC and be resolved by the Contractor to the satisfaction of the DDC.

4. Equipment and Vehicle Decontamination

a. The Contractor shall design and construct a portable decontamination station to be used to decontaminate equipment and vehicles exiting from the exclusion zone. The cost for this work will be paid under Item 8.01 S - Health and Safety.

b. Water generated during the decontamination process shall be disposed of in accordance with Item 8.01 W1 – Removal, Treatment and Discharge/Disposal of Contaminated Water.

8.01 C1.4 METHOD OF MEASUREMENT

Quantities for non-hazardous contaminated soils shall be measured in tons. The tonnage will be determined by off-site truck scales, as per Subsection 8.01 C1.3.B1, that are capable of generating load tickets.

8.01 C1.5 PRICE TO COVER

A. The unit bid price bid per ton for Item 8.01 C1 shall include the cost of furnishing all labor, materials, equipment, plan, and insurance for excavation, handling, transportation, disposal, documentation, fees, permits, loading, stockpiling, hauling, and any other incidentals necessary to complete all the work as specified herein for handling, transporting, and disposal of non-hazardous contaminated soil.

B. Final disposal of hazardous soil shall be paid for under Item 8.01 H – Handling, Transporting and Disposal of Hazardous Soils. Disposal of decontamination water shall be paid for under Item 8.01 W1 – Removal, Treatment and Discharge/Disposal of Contaminated Water.

C. Backfill will be paid for under its respective item as specified in the contract document.

D. The independent Environmental Consultant shall be paid under Item 8.01 S – Health and Safety.

Payment will be made under:

ITEM NUMBER	ITEM	PAYMENT UNIT
8.01 C1	Handling, Transporting, and Disposal of Non-Hazardous Contaminated Soil	Tons

ITEM 8.01 C2 SAMPLING AND TESTING OF CONTAMINATED/ POTENTIALLY HAZARDOUS SOIL FOR DISPOSAL PARAMETERS

8.01 C2.1 WORK TO INCLUDE

A. Description

The work shall consist of collecting and analyzing representative soil samples for parameters typically requested by the disposal facilities.

B. Sampling and Laboratory Analysis

1. At least thirty (30) days prior to the commencement of work, the Contractor's independent Environmental Consultant must submit a Soil Sampling Plan/Field Sampling Plan (SSP/FSP) and an Investigation Health and Safety Plan to the Program Management, Office of Environmental and Geotechnical Services (OEGS) for review and approval. The SSP/FSP shall include the name, address, DOH's ELAP status, and telephone numbers of the proposed laboratory. The SSP/FSP shall also include training and experience of the personnel who will collect the samples. The Investigation HASP shall identify actual and potential hazards associated with planned sampling field activities and stipulate appropriate health and safety procedures, so as to minimize field personnel exposure to physical, biological, chemical hazards that may be present in the all sampling media.

2. The Contractor shall sample and analyze representative samples of the contaminated/potentially hazardous soils. For stockpiled soils, the Contractor shall collect and analyze one (1) composite sample per 500 cubic yards or fraction thereof. Each composite sample shall consist of a minimum of five (5) grab samples collected from greater than two (2) feet below the soil surface. For drummed soil, the Contractor shall collect one (1) composite sample per (ten) 10 drums or fraction thereof. Each composite sample shall consist of a grab sample from each of the ten (10) drums or fraction thereof. Each composite sample shall be analyzed for Resource Conservation and Recovery Act (RCRA) hazardous waste characteristics (Ignitability, Reactivity, Corrosivity), Full Toxicity Characteristic Leaching Procedure (TCLP) (including RCRA metals, volatile Organic Compounds (VOCs), Semi-Volatile Organic Compounds (SVOCs), pesticides, herbicides), Total Petroleum Hydrocarbons (TPH) and Polychlorinated Biphenyls (PCBs). All samples collected should be analyzed on a five (5) calendar days turn around time and analytical results must be submitted to Program Management, OEGS upon receipt of the analytical results.

3. All sampling shall be conducted by a person trained in sampling protocols using standard accepted practices for obtaining representative samples.

4. The Contractor must also contact the disposal facility where the waste will be sent for permanent disposal, and arrange to collect any additional samples required by the facility. The cost associated with additional sampling and testing shall be included in the bid price of this Item.

5. The quality of the data from the sampling program is the Contractor's responsibility. The Contractor must furnish all qualified personnel, equipment and instruments necessary to carry out the sampling. Unless directed otherwise, all sampling procedures must follow the DEC sampling guidelines and protocols.

6. All sample containers shall be marked and identified with legible sample labels which shall indicate the project name, sample location and/or container, the sample number, the

date and time of sampling, preservatives utilized and other information that may be useful in determining the character of the sample. Chain-of-custody shall be tracked from laboratory issuance of sample containers through laboratory receipt of the samples.

7. The Contractor shall maintain a bound sample logbook. The Contractor shall provide DDC access to it at all times and shall turn it over to the DDC in good condition at the completion of the work. The following information, as a minimum shall be recorded to the log:

    1. Sample identification number
    2. Sample location
    3. Field observation
    4. Sample type
    5. Analyses
    6. Date/time of collection
    7. Collector's name
    8. Sample procedures and equipment utilized
    9. Date sent to laboratory and name of laboratory

8. The City reserves the right to direct the Contractor to conduct alternative sampling in lieu of the parameters described in subsection B2, if the situation warrants. The substitute sampling parameters shall be of equal or lesser monetary value than those described in subsection B2, as determined by industry laboratory pricing standards.

9. Only dedicated sampling equipment may be used to collect these samples. All equipment involved in field sampling must be decontaminated before being brought to the sampling location, and must be properly disposed after use.

10. Soils exceeding any of the hazardous characteristic criteria meet the legal definition of hazardous soils (rather than non-hazardous contaminated soils) and shall be transported or disposed of under Item 8.01 H – Handling, Transporting and Disposal of Hazardous Soils. All analyses must be done by a laboratory that has received approval from the ELAP for the methods to be used. The Contractor must specify the laboratory in the MHP.

8.01 C2.2 METHOD OF MEASUREMENT

Quantities for samples shall be measured as the number of sets of samples that are tested. A set shall be defined as one (1) composite sample analyzed for the full range of parameters as specified in subsection B2.

8.01 C2.3 PRICE TO COVER

The unit price bid per set for Item 8.01 C2 shall include the cost of furnishing all labor, materials, equipment, plan, and insurance necessary for sampling, handling, transporting, testing, documentation, fees, permits and any other incidentals necessary to complete the work as specified herein for sampling and testing of contaminated/potentially hazardous soil.

Payment will be made under:

ITEM NUMBER	ITEM	PAYMENT UNIT
8.01 C2	Sampling and Testing of Contaminated/ Potentially Hazardous Soil for Disposal Parameters	Set

ITEM 8.01 H HANDLING, TRANSPORTING, AND DISPOSAL OF HAZARDOUS SOILS

8.01 H.1 WORK TO INCLUDE

General: This work shall consist of the handling, transportation and disposal of soils or materials that are listed as hazardous wastes or exhibit any of the characteristics of a hazardous waste, namely ignitability, corrosivity, reactivity, and toxicity, as defined in 6 NYCRR Part 371, Section 371.3 and 40 CFR Section 261. For the purpose of this specification, soils shall be defined as any materials excavated below the pavement and base for pavement.

Contaminated soils determined to be hazardous under Item 8.01 C2 shall be handled, transported, and disposed of under Item 8.01 H in accordance with the specifications herein.

The independent Environmental Consultant retained by the Contractor, as specified under Item 8.01 S – Health and Safety, shall conduct sampling and analysis of above soils to determine which soils are hazardous.

All work under Item 8.01 H shall be performed under the direct supervision of the Contractor's Environmental Consultant, as approved by the Program Management, Office of Environmental and Geotechnical Services (OEGS).

The Contractor shall ensure that all operations associated with the handling, sampling, loading, transportation, and disposal of hazardous materials are in compliance with the applicable Federal, State, and Local statutes and regulations.

The Contractor shall document the excavation, handling, sampling, and testing, transportation and disposal of hazardous soils. The City shall be listed in the disposal documents as the waste generator.

The Contractor shall supply all equipment, material and labor required to conduct the specified work of this section.

The Contractor shall ensure that all operations associated with the handling, sampling, loading, transportation and disposal of hazardous soils are conducted in a manner to protect site personnel, the public and the environment, in accordance with all applicable Federal, State, and Local laws and regulations.

The Contractor shall decontaminate all equipment prior to its removal from the exclusion zone and/or following contact with hazardous materials, as detailed in Item 8.01 S - Health and Safety. Water generated during the decontamination process shall be disposed of under Item 8.01 W1 – Removal, Treatment and Discharge/Disposal of Contaminated Water.

A. Material Handling Plan: Within forty-five (45) calendar days after award of Contract, the Contractor shall submit to the Program Management, OEGS for review, a Material Handling Plan (MHP). The MHP must be approved by the Program Management, OEGS, prior to the Contractor's commencement of work. The MHP shall, at a minimum, consist of:

   1. The Contractor's procedures for identifying contaminated/potentially hazardous soils during excavation, including instrumentation and calibration procedures to be used.

   2. The Contractor's procedures for safely handling hazardous soils or soils which have not yet been tested but are believed to be potentially hazardous.

   3. Identification of the Contractor's proposed waste transporter(s). This information shall include:

      a. Name and waste transporter permit number

b. Address

c. Name of responsible contact for the hauler

d. Telephone number for the contact

e. Any and all necessary permit authorizations for each type of waste transported

f. Previous experience in performing the type of work specified herein

4. All staging/stockpiling areas (if stockpiling areas are intended and available), or alternate procedures that will be used. Alternate procedures could include, but are not limited to, agreements from the intended disposal or treatment facilities to accept boring data and/or analytical data previously obtained during the site characterization so that materials may be directly loaded into vehicles for shipment to the disposal facility or the use of off-site stockpiling locations approved by the DEC.

5. A backup facility, should the staging/stockpile areas become unavailable, insufficient in area or not be present by some other unforeseen difficulty.

6. Identification of the Contractor's two proposed United State Environmental Protection Agency (EPA) or DEC approved RCRA TSD facilities for hazardous soils.

7. The Contractor shall submit the following information prior to any transportation of soils regarding the temporary and final off-site TSD or facilities where it is proposing to take hazardous soils. The expense of furnishing all information will be included in the Contractor's bid price:

   a. General Information

      (1) Facility name and the EPA identification number

      (2) Facility location

      (3) Name of responsible contact for the facility

      (4) Telephone number for contact

      (5) Signed letter of agreement to accept waste as specified in this contract

      (6) Signed letter of agreement with a TSD for disposal of waste that may not be land-disposed

      (7) Unit of measure utilized at each facility for costing purposes

   b. A listing of all permits, licenses, letters of approval, and other authorizations to operate, which are currently held and valid for the proposed facility as they pertain to receipt and management of wastes derived from this Contract.

   c. A listing of all permits, licenses, letters of approval, and other authorizations to operate which have been applied for by the proposed facility.

   d. The Contractor shall specify and describe the disposal/containment unit(s) that the proposed facility will use to manage the waste. The Contractor shall identify the capacity available in the units and the capacity reserved for the subject waste.

   e. The Contractor shall provide the date of the proposed facility(ies) last compliance inspection under RCRA.

   f. A list of all active (unresolved) compliance orders, agreements, enforcement notices or notices of violations issued to the proposed facility shall be approved. The source and nature of the cause of violation shall be stated, if known.

8. Description of all sampling and analyses that will be needed to obtain disposal facility approval.

8.01 H.2 MATERIALS

A. Containers shall be watertight as required in the DOT regulations and must meet all applicable regulations including but not limited to those in Attachment 2.

B. Polyethylene (20 mil. thickness minimum) to be placed under and (10 mil. thickness minimum) over soil piles. If soils are placed in drums, polyethylene must be placed over the drums.

8.01 H1.3 CONSTRUCTION DETAILS

A. Material Handling

1. The Contractor shall institute procedures to protect site personnel and the public from the non-hazardous and hazardous materials as described in Section 8.01 S - Health and Safety.

2. The Contractor shall handle hazardous soil as approved in the MHP.

3. Stockpiled materials at the temporary TSD facility shall be handled according to the facility requirements but at a minimum: shall be drummed or placed on and covered with polyethylene to protect against erosion and leaching into surrounding soils, the stockpile area shall be graded for positive drainage away from the pile, and shall be labeled while being held for sampling prior to permanent disposal.

4. Provide any dewatering that is necessary to complete the work. Water shall be disposed of in accordance with Item 8.01 W1 – Removal, Treatment and Discharge/Disposal of Contaminated Water.

B. Off-Site Transportation and Disposal

1. The Contractor shall furnish all labor, equipment and supplies required to transport hazardous materials from the work area to the off-site TSD facility(ies) and to acquire any other items and services required for transporting hazardous materials for storage and/or disposal at an approved off-site facility.

2. Weight Measurement

a. The Contractor shall submit the name and location of the facility where an off-site scale is located. The Contractor shall also submit a plan to the DDC for review outlining procedures on controlling trucks leaving the work site and on-route to the off-site scale. The Contractor shall be responsible for tracking all materials/vehicles from the site to the off-site scale.

b. The Contractor shall provide to the DDC certified tare and gross weight slips for each load received at the accepted facility which shall be attached to each returned manifest.

3. General

a. Manifests: The Contractor shall organize and maintain the material shipment records/manifests required by law.

b. The Contractor shall coordinate the schedule for truck arrival and material deliveries at the job site to meet the approved project schedule. The schedule shall be compatible with the availability of equipment and personnel for material handling at the job site.

c. The Contractor shall inspect all vehicles leaving the project site to ensure that hazardous soils adhering to the wheels or under carriage are removed prior to the vehicle leaving the site.

d. The Contractor shall obtain letters of commitment from the waste haulers and the TSD facility to haul and accept shipments. The letter shall indicate agreement to handle and accept the specified estimated quantities and types of material during the time period specified in the project schedule and any time extension as deemed as necessary.

4. Hauling

a. The Contractor shall not deliver waste to any facility other than the TSD facility(ies) listed on the shipping manifest.

b. The Contractor shall coordinate manifesting, placarding, of shipments, and vehicle decontamination. All quantities shall also be measured and recorded upon arrival at the TSD facility. If any deviation between the two records occurs, the matter is to be reported immediately to the DDC and to be resolved by the Contractor to the satisfaction of the DDC.

c. The Contractor shall be held responsible, at its own expense, for any and all actions necessary to remedy situations involving material spilled in transit or mud and dust tracked off-site.

d. The Contractor shall ensure that trucks are protected against contamination by properly covering and lining them with compatible material (such as polyethylene) or by decontaminating them prior to any use other than hauling hazardous materials.

e. The Contractor shall be responsible for inspecting the access routes for road conditions, overhead clearance, and weight restrictions.

f. The Contractor shall only use the transporter(s) identified in the MHP for the performance of work. Only a transporter with a current Part 364 Waste Transporter Permit from the DEC may transport this material. Any use of substitute or additional transporters must have previous written approval from the DDC at no additional cost to the City.

g. The Contractor shall develop, document, and implement a policy for accident prevention.

h. The Contractor shall not combine hazardous materials from other projects with material from this project.

i. **The Contractor shall obtain for the City an EPA hazardous waste generator identification number and a representative of Program Management, OEGS will review and sign the manifest as the generator.**

j. No materials shall be transported until approved by the DDC.

5. Off-Site Disposal

a. The Contractor shall be responsible for acceptance of the materials at an approved TSD facility, for ensuring that the facility is properly permitted to accept the stated materials, and that the facility provides the stated storage and/or disposal services.

b. In the event that the identified and approved facility ceases to accept the stated materials or the facility ceases operations, it is the Contractor's responsibility to locate an alternate approved and permitted facility(ies) for accepting materials. The Contractor is responsible for making the necessary arrangements to utilize the facility(ies), and the alternate facility(ies) must be approved in writing by the DDC in the same manner and with the same requirements as for the original facility(ies). This shall be done with no extra cost or delay to the City.

c. The Contractor shall submit all results and weights to the DDC.

d. **The Contractor is responsible to pay <u>all fees</u> associated with the generation and disposal of all excavated hazardous waste. These fees include, but are not limited to, the <u>New York State Department of Finance and Taxation (DFT) quarterly fees</u> for hazardous waste and the <u>New York State DEC annual hazardous waste regulatory fee program</u>. The Contractor shall submit a copy of proof of payment to the DDC and Program Management, OEGS.**

6. Equipment and Vehicle Decontamination

The Contractor shall design and construct a portable decontamination station to be used to decontaminate equipment and vehicles exiting from the exclusion zone. The cost for this work shall be paid under Item 8.01 S - Health and Safety. Disposal of decontamination liquids is described under Item 8.01 W1 – Removal, Treatment and Discharge/Disposal of Contaminated Water.

7. Record Keeping

The Contractor shall obtain manifest forms, and complete the shipment manifest records required by the appropriate regulatory agencies for verifying the material and quantity of each load in unit of volume and weight. Copies of each manifest shall be submitted to the DDC within four (4) business days following shipment, and within three (3) business days after notification of receipt of the facility. Any manifest discrepancies shall be reported immediately to the DDC and be resolved by the Contractor to the satisfaction of the DDC.

8.01 H.4 METHOD MEASUREMENT

Quantities for hazardous soil shall be measured in tons satisfactorily delivered to the treatment, storage or disposal facility. The tonnage will be determined by off-site truck scales, as per subsection 8.01 H1.3.B.2, that are capable of generating load tickets.

8.01 H.5 PRICE TO COVER

A. The unit price bid per ton for Item 8.01 H shall include the cost of furnishing all labor, materials, equipment, plan, and insurance for excavation, handling, transportation, disposal, documentation, permits, fees, taxes, stockpiling, hauling, and any other incidentals necessary to complete the work as specified herein for handling, transporting and disposal of hazardous soils.

B. Final disposal of non-hazardous materials shall be paid for under Item 8.01 C1 – Handling, Transporting and Disposal of Non-Hazardous Soils. Disposal of decontamination water shall

be paid under Item 8.01 W1 – Removal, Treatment and Discharge/Disposal of Contaminated Water.

C The independent Environmental Consultant shall be paid under Item 8.01 S – Health and Safety.

D. Backfill will be paid for under its respective item.

Payment will be made under:

ITEM NUMBER	ITEM	PAYMENT UNIT
8.01 H	Handling, Transporting, and Disposal of Hazardous Soils	Tons

ITEM 8.01 S HEALTH AND SAFETY

8.01 S.1 WORK TO INCLUDE

Health and Safety Requirements

A. Scope of Work

It is the Contractor's responsibility to stage and conduct his work in a safe manner. The Contractor shall implement a Health and Safety Plan (HASP) for contaminated/hazardous soil intrusive activities as set forth in Occupational Safety and Health Administration (OSHA) Standards 1910.120 and 1926.650-652. The Contractor shall ensure that all workers have at a minimum hazard awareness training. The Contractor shall segregate contaminated work area in secured exclusion zones. These zones shall limit access to Contractor personnel specifically trained to enter the work area. The exclusion zone shall be set up to secure the area from the public and untrained personnel. The project health and safety program shall apply to all construction personnel including persons entering the work area. In addition, the Contractor shall protect the public from on-site hazards, including subsurface contaminants associated with on-site activities. The HASP shall be signed off by a Certified Industrial Hygienist and reviewed by Program Management, Office of Environmental and Geotechnical Services (OEGS).

Work shall include, but not be limited to:

1. Implementation of a baseline medical program.
2. Providing safety equipment and protective clothing for site personnel, including maintenance of equipment on a daily basis; replacement of disposable equipment as required; decontamination of clothing, equipment and personnel; and providing all other health and safety measures.
3. Providing, installing, operating and maintaining on-site emergency medical first aid equipment as specified in this section for which payment is not provided under other pay items in this Contract.
4. Providing, installing, operating, maintaining and decommissioning all equipment and personnel decontamination facilities specified within this section, including, but not limited to, the decontamination pad, decontamination water supply, decontamination water collection equipment and all other items and services required for the implementation of the health and safety requirements for which pay items are not provided elsewhere in this Contract.
5. Provide the minimum health and safety requirements for excavation activities within the limits of this Contract.
6. Implement and enforce a HASP: The HASP as presented in these specifications is dynamic with provisions for change to reflect new information, new practices or procedures, changing site environmental conditions or other situations which may affect site workers and the public. The HASP will also address measures for community protection, accident prevention, personnel protection, emergency response/contingency planning, air monitoring, odor control and hazardous chemicals expected on site. Providing a Confined Space Entry Program as defined in the Occupational Safety and Health Act, Confined Space Entry Standard, 29 CFR 1910.146.

B. Environmental Consulting Services

The Contractor shall retain an independent Environmental Consultant to obtain all permits and perform all field screening, air monitoring, community air monitoring, soil sampling, and health and safety services. The independent Environmental Consultant shall at a minimum provide documentation to the Program Management, OEGS demonstrating the minimum requirements as set forth below:

1. The independent Environmental Consultant project supervisor on site and other designated key personnel shall have a minimum of three (3) years experience in the environmental field dealing with issues associated with contaminated soils. Such experience shall include oversight on environmental, specifically volatile organic compound and dust monitoring services as a routine part of its daily operations.

2. The independent Environmental Consultant must be experienced in work of this nature, size, and complexity and must have previous experience in working with the DEC.

3. The independent Environmental Consultant shall furnish a project listing identifying the location, nature of services provided, owner, owner's contact, contact's telephone number, project duration and value for at least five (5) projects within the last three (3) years.

4. If conditions within the exclusion zone are deemed hazardous, then the Contractor and its independent Environmental Consultant shall ensure that all personnel working within identified exclusion zones and/or involved (direct contact) with the handling, storage or transport of hazardous and contaminated materials shall have completed a minimum of forty (40) hours of Health and Safety Training on Hazardous Waste Sites in accordance with 29 CFR 1910.120(e). The training program shall be conducted by a qualified safety instructor. If conditions in the exclusion zone are deemed to be non-hazardous, the independent Environmental Consultant shall provide site specific training.

5. The Contractor shall ensure that on-site management and supervisors directly responsible for or who supervise employees engaged in hazardous waste operations shall receive the training specified in above and at least eight (8) additional hours of specialized training on managing such operations at the time of job assignment.

C. Submittals

1. The Contractor shall submit, a written HASP, as specified herein, to Program Management, OEGS for review and comment. The written HASP shall be submitted, within thirty (30) calendar days after the availability of analytical results of the soil and groundwater testing, as required under Section 8.01 C2 and Section 8.01 W2. The Contractor shall make all necessary revisions required by Program Management, OEGS and resubmit the HASP to the Program Management, OEGS for acceptance. Start-up work for the project will not be permitted until written acceptance has been issued by the Program Management, OEGS.

2. Daily safety logs shall be maintained by the Contractor and shall be submitted to the DDC either on request or on completion of the work. Training logs shall be maintained by the Contractor and submitted to the DDC either on request or on completion of the work. Daily logs on air monitoring during excavation activities shall be prepared and maintained by the Contractor and submitted to the DDC either on request or upon completion of the work.

3. A closeout report shall be submitted by the Contractor to the DDC upon completion of the work within the defined exclusion zones. This report shall summarize the daily safety and monitoring logs and provides an overview of the Contractor's performance regarding environmental and safety issues. The report shall carefully document all areas

where contamination has been found including pictures, addresses of locations, and potential sources.

4. Medical Surveillance Examinations: The Contractor shall submit to the DDC the name, office address and telephone number of the medical consultant utilized. Evidence of baseline medical examinations together with the evidence of the ability to wear National Institute for Occupational Safety and Health (NIOSH) approved respirators (as specified in American National Standards Institute (ANSI) Z88.6) shall be provided to the DDC for all construction personnel who are to enter the exclusion zones.

5. Accident Reports: All accidents, spills, or other health and safety incidents shall be reported to the DDC.

D. Health and Safety Plan

The HASP shall comply with OSHA regulations 29 CFR 1910.120/1926.65. This document shall at a minimum contain the following:

1. Description of work to be performed
2. Site description
3. Key personnel
4. Worker training procedures
5. Work practices and segregation of work area
6. Hazardous substance evaluation
7. Hazard assessment
8. Personal and community air monitoring procedures and action levels
9. Personal protective equipment
10. Decontamination procedures
11. Safety rules
12. Emergency procedures
13. Spill control, dust control, vapor/odor suppression procedures
14. Identification of the nearest hospital and route
15. Confined space procedures
16. Excavation safety procedures

8.01 S.2 MEASUREMENT

Health and Safety Requirements

A. 25% of the lump sum price will be paid when the following items are implemented or mobilized:

Medical surveillance program
Health and safety training
Health and safety plan
Environmental and personnel monitoring
Instrumentation
Spill control
Dust control
Personnel and equipment decontamination facilities
Personnel protective clothing
Communications
Mobilization

B. 50% will be paid in proportional monthly amounts over the period of work.

C 25% will be paid when the operation is demobilized and removed from the project site.

8.01 S.3 PRICE TO COVER

Health and Safety Requirements

The lump sum price bid for the health and safety requirements shall include all labor, materials, equipment, and insurance necessary to complete the work in accordance with these specifications. The price bid shall include, but not be limited to, the following:

A. Providing training, safety personnel, air monitoring and medical examinations as specified.

B. Providing safety equipment and protective clothing for site personnel, including maintenance of equipment on a daily basis; replacement of disposable equipment as required; decontamination of clothing, equipment and personnel; and all other health and safety activities or costs not paid for under other pay items in this Contract.

C. Providing, installing, operating and maintaining on-site emergency medical and first aid equipment. This includes all furnishings, equipment, supplies and maintenance of all medical equipment, and all other health and safety items and services for which payment is not provided under other pay items in this Contract.

D. Providing, installing, operating, maintaining, and decommissioning all personnel and equipment decontamination facilities, including decontamination pad, decontamination water supply, and all other items and services required for the implementation of the health and safety requirements for which pay items are not provided elsewhere in this Contract. Vehicle decontamination pads shall be included in the price of this item. Disposal of decontamination fluid shall be paid for under Item 8.01 W1 – Removal, Treatment and Discharge/Disposal of Contaminated Water.

E. Spill Control

1. Payment shall account for furnishing, installing, and maintaining all spill control equipment and facilities. Payment will include equipment and personnel to perform emergency measures required to contain any spillage and to remove spilled materials and soils or liquids that become contaminated due to spillage during work within the exclusion zones and handling of excavated soils and liquids from these areas. This collected spill material will be properly disposed of.

2. Payment under this item shall not include testing, handling, transportation or disposal of petroleum-contaminated/potentially hazardous soils excavated during construction. The price for this work will be paid for under Items 8.01 C1 – Handling, Transporting and Disposal of Non-Hazardous Contaminated Soils, 8.01 C2 – Sampling and Testing of Contaminated/Potentially Hazardous Soil for Disposal Parameters or 8.01 H – Handling, Transporting and Disposal of Hazardous Soils, as appropriate.

F. Dust Control

Payment shall account for furnishing, installing, and maintaining dust control equipment and facilities to be used whenever applicable dust levels are exceeded. Payment will include all necessary labor, equipment, clean water, foam, and all other materials required by the Dust Control Plan. The DOH Community Air Monitoring Plan (CAMP) may be used as guidance.

G. Vapor/Odor Suppression

Payment shall account for furnishing, installing and maintaining vapor/odor control equipment and facilities to be used whenever organic vapor monitoring or the presence of odors indicates that vapor suppression is required to protect workers or the public. Payment will include all

necessary labor, equipment, clean water, foam and all other materials required by the Vapor/Odor Suppression Plan.

H. Mobilization/Demobilization

1. Mobilization

Payment shall include but not be limited to:

a. All work required to furnish, install and maintain all signs, fencing, support zone facilities, parking areas and all temporary utilities;

b. All work required to furnish, install, and maintain an office space with phone and utilities for health and safety personnel;

c. All work required for complete preparation of lay down area for roll-off containers, including sampling, and any required fencing;

d. All direct invoiced cost from bonding companies and government agencies for permits and costs of insurance; and

e. All other items and services required for mobilization and site preparation.

2. Demobilization

Payment shall include but not be limited to: All work required to sample the area; remove from the site all equipment, temporary utilities and supporting facilities; performance of necessary decontamination and repairs; disposal of disposable equipment and protective gear and other items and services required for complete demobilization.

Payment will be made under:

ITEM NUMBER	ITEM	PAYMENT UNIT
8.01 S	Health and Safety	Lump Sum

ITEM 8.01 W1 REMOVAL, TREATMENT, AND DISCHARGE/DISPOSAL OF CONTAMINATED WATER

8.01 W1.1 WORK TO INCLUDE

General: This work shall consist of the proper removal and disposal of all contaminated groundwater and decontamination water generated during construction operations. The Contractor shall be solely responsible for the proper disposal or discharge of all contaminated water generated at the job site. The Contractor will have the option of treating water on-site for discharge to the combined sanitary/storm sewer system or removing contaminated water for off-site disposal. The Contractor shall be responsible to choose a method compatible to the construction work and shall be compensated on a per day basis regardless of method employed. The Contractor will be compensated for only those days where the system is in full operation.

The Contractor shall retain a dewatering/water treatment Specialist (hereinafter the "Specialist") and laboratory as specified under Item 8.01 W2 – Sampling and Testing of Contaminated Water, to conduct any testing that may be required for disposal of impacted water.

The dewatering/water treatment Specialist is responsible to obtain all permits; perform all water sampling, testing; and provide ancillary services related to dewatering and water treatment. The Specialist shall at a minimum provide documentation to the Program Management, Office of Environmental and Geotechnical Services (OEGS) demonstrating the minimum requirements as set forth below:

1. The Specialist shall demonstrate that it has, at a minimum, three (3) years experience in the design of dewatering plans. The Specialist should demonstrate expertise dealing with issues associated with contaminated water. During that three (3) year period, the Specialist shall demonstrate that it provided dewatering and water treatment systems as a routine part of its daily operations.
2. The Specialist must be experienced in work of this nature, size, and complexity and must have previous experience in working with the DEC.
3. The Specialist shall furnish a project listing identifying the location, nature of services provided, owner, owner's contact, contact's telephone number, project duration and value for at least five (5) projects within the last three (3) years of a similar nature, size, and complexity to this one.
4. If conditions within the exclusion zone are deemed hazardous, then the Contractor and its independent Environmental Consultant shall ensure that all personnel working within identified exclusion zones and/or involved (direct contact) with the handling, storage or transport of hazardous and contaminated material shall have completed a minimum of forty (40) hours of Health and Safety Training on Hazardous Waste Sites in accordance with 29 CFR 1910.120(e). The training program shall be conducted by a qualified safety instructor. If conditions in the exclusion zone are deemed to be non-hazardous, the Specialist shall be responsible to provide site-specific training to its employees and other affected personnel.
5. The Contractor shall ensure that on-site management and supervisors directly responsible for or who supervise employees engaged in hazardous waste operations shall receive the training specified in above and at least eight (8) additional hours of specialized training on managing such operations at the time of job assignment.

The Contractor shall document all operations associated with the handling, sampling and disposal of contaminated water, and ensure that they are in compliance with applicable Federal, State and Local statutes and regulations.

The Contractor shall supply all labor, equipment, transport, plant, material, treatment, and other incidentals required to conduct the specified work of this section.

If water will be disposed of into the combined sanitary/storm sewer system, the Contractor shall ensure the Specialist treats the water to comply with the New York City Department of Environmental Protection (DEP) Sanitary/Combined and Storm Sewer Effluent Limit concentrations prior to discharge. The Contractor is responsible for providing settling or filtering tanks and any other apparatus required by DEP. Alternatively, the Contractor can provide a plan for transport and disposal at an off-site waste disposal facility.

Within forty-five (45) calendar days after award of Contract, the Contractor shall submit to the Program Management, OEGS for review, a Water Handling Plan (WHP). The WHP must be approved by the Program Management, OEGS, prior to the Contractor's commencement of work. The minimum requirements for the WHP are specified herein Item 8.01W 1.2, for each type of disposal (disposal into the combined sanitary/storm sewer or off-site disposal). The Contractor shall maintain a complete, up to date copy of the WHP on the job site at all times.

8.01 W1.2 CONSTRUCTION DETAILS

For each disposal method the Contractor proposes to utilize (disposal to combined sanitary/storm sewer or off-site disposal), the WHP shall include the information required in paragraphs A and B below, as appropriate.

A. <u>On-site treatment and discharge into New York City combined sanitary/storm sewers.</u>

1. Regulations: The Contractor shall comply with all applicable regulations. This includes but may not be limited to:

   Title 15-New DEP Sewer Use Regulations.

2. Permits: The Contractor is solely responsible to obtain all necessary and appropriate Federal, State and Local permits and approvals. The Contractor will be responsible for performing all and any system pilot tests required for permit approval. This includes but may not be limited to:

   a. Industrial waste approval for the New York City sewer system.

   b. Groundwater discharge permit for the New York City sewer system (DEP Division of Sewer Regulation and Control), if discharge to sewer exceeds 10,000 gallons per day.

   c. The Contractor shall comply with DEC State Pollutant Discharge Elimination System (SPDES) Permit Number GP-0-10-001, General Permit for Stormwater Discharges.

   d. Long Island well point permit for Brooklyn and Queens sites, if well points are used for dewatering.

   e. Wastewater quality control application, DEP.

3. The WHP for this portion of the work shall include at a minimum:

a. Identification and design of Contractor's proposed treatment to assure that the water meets the DEP sewer use guidelines prior to discharge to the sewer, including identification of all materials, procedures, settling or filtering tanks, filters and other appurtenances proposed for treatment and disposal of contaminated water.

b. The name, address and telephone number of the contact for the Contractor's proposed chemical laboratory, as well as the laboratory's certifications under Federal, State or non-governmental bodies.

c. The name, address and telephone number of the contact for the Contractor's proposed independent Environmental Consultant.

d. Copies of all submitted permit applications and approved permits the Contractor have received.

4. Materials

The Contractor shall supply all settling or filtering tanks, pumps, filters, treatment devices and other appurtenances for treatment, temporary storage and disposal of contaminated water. All equipment shall be suitable for the work described herein.

5. Execution

a. The Contractor is solely responsible for disposal of all water, in accordance with all Federal, State and Local regulations.

b. The Contractor is solely responsible for any treatment required to assure that water discharged into the sewer is in compliance with all permits and Federal, State and Local statutes and regulations.

c. The Contractor is solely responsible for the quality of the water disposed of into the sewers.

d. The Contractor is responsible for sampling and testing of water for the DEP Sanitary/Combined and Storm sewer Effluent Limit concentrations. The quality of the data is the Contractor's responsibility. Any sampling and testing shall be conducted and paid in accordance with Item 8.01 W2 – Sampling and Testing of Contaminated Water.

e. The Contractor shall be responsible to maintain the discharge rate to the sewer such that all permit requirements are met, the capacity of the sewer is not exceeded and no surcharging occurs downstream due to the Contractor's actions. Dewatering by means of well points or deep wells will not be allowed in the Boroughs of Brooklyn or Queens where the rate of pumping exceeds forty-five (45) gallons per minute unless the appropriate permit has been secured from the DEC.

f. Disposal of Treatment Media

(1) The Contractor shall be responsible for disposal or recycling of treatment media in accordance with all Federal, State and Local regulations.

(2) The Contractor shall provide the DDC with all relevant documentation concerning the disposal of treatment media, including manifests, bills of lading, certificates of recycling or destruction and other applicable documentation.

(3) **Disposal of treatment media shall not be considered as a separate pay item; instead it shall be considered as incidental work thereto and included in the unit price bid.**

B. Off-Site Disposal

1. Regulations: The Contractor shall conform to all applicable Federal, State and Local regulations pertaining to the transportation, storage and disposal of any hazardous and/or non-hazardous materials as listed in Attachment 2.

2. The following shall be submitted to the DDC prior to initiating any off-site disposal:

a. (1) Name and waste transporter permit number

(2) Address

(3) Name of responsible contact for the hauler

(4) Any and all necessary permit authorizations for each type of waste transported

(5) Previous experience in performing the type of work specified herein

b. General information for each proposed treatment/disposal facility and at least one backup treatment/disposal facility

(1) Facility name and EPA identification number

(2) Facility location

(3) Name of responsible contact for the facility

(4) Telephone number for contact

(5) Unit of measure utilized at facility for costing purposes

c. A listing of all permits, licenses, letters of approval and other authorizations to operate, which are currently held and valid for the proposed facility as they pertain to receipt and management of the wastes derived from this Contract.

d. A listing of all permits, licenses, letters of approval and other authorizations to operate which have been applied for by the proposed facility but not yet granted or issued. Provide dates of application(s) submitted. Planned submittals shall also be noted.

e. The Contractor shall specify and describe the disposal/containment unit(s) that the proposed facility will use to manage the waste and provide dates of construction and beginning of use, if applicable. Drawings may be provided. The Contractor shall identify the capacity available in the units and the capacity reserved for the subject waste.

f. The Contractor shall provide the date of the proposed facility's last compliance inspection.

g. A list of all active (unresolved) compliance orders, agreements, enforcement notices or notices of violations issued to the proposed facility shall be submitted. The source and nature of the cause of violation shall be stated, if known. If groundwater contamination is noted, details of the facility's groundwater monitoring program shall be provided.

h. Description of all sampling and field/laboratory analyses that will be needed to obtain disposal facility approval.

3. Materials

All vessels for temporary storage and transport to an off-site disposal facility shall be as required in DOT regulations.

4. Execution

a. General

(1) The Contractor shall organize and maintain the material shipment records/manifests required by Federal, State and Local law. The Contractor shall include all bills of lading, certificates of destruction, recycling or treatment and other applicable documents.

(2) The Contractor shall coordinate the schedule for truck arrival and material deliveries at the job site to meet the approved project schedule. The schedule shall be compatible with the availability of equipment and personnel for material handling at the job site.

(3) The Contractor shall inspect all vehicles leaving the project site to ensure that contaminated liquids are not spilling and are contained for transport.

(4) The Contractor shall obtain letters of commitment from the waste haulers and the treatment, disposal or recovery facility to haul and accept shipment. The letter shall indicate agreement to handle and accept the specified estimated quantities and types of material during the time period specified in the project schedule and any time extension as deemed as necessary.

(5) The Contractor shall verify the volume of each shipment of water from the site.

(6) The Contractor is responsible for sampling and testing of water for off-site disposal. The quality of the data is the Contractor's responsibility. Any sampling and testing shall be conducted and paid in accordance with Item 8.01 W2 – Sampling and Testing of Contaminated Water.

(7) The Contractor shall be responsible for any additional analyses required by the TSD facility, and for the acceptance of the water at an approved TSD facility.

b. Hauling

(1) The Contractor shall not deliver waste to any facility other than the TSD facility(ies) listed on the shipping manifest.

(2) The Contractor shall coordinate manifesting, placarding of shipments, and vehicle decontamination. All quantities shall also be measured and recorded upon arrival at the TSD facility(ies). If any deviation between the two records occurs, the matter is to be reported immediately to the DDC and shall be resolved by the Contractor to the satisfaction of the DDC.

(3) The Contractor shall be held responsible for any and all actions necessary to remedy situations involving material spilled in transit or mud and dust tracked off-site. This cleanup shall be accomplished at the Contractor's expense.

(4) The Contractor shall be responsible for inspecting the access routes for road conditions, overhead clearance and weight restrictions.

(5) The Contractor shall only use the transporter(s) identified in the WHP for the performance of work. Only a transporter with a current Part 364 Waste Transporter Permit from DEC may transport this material. Any use of substitute or additional transporters must have previous written approval from the DDC at no additional cost to the City.

(6) The Contractor shall develop, document, and implement a policy for accident prevention.

(7) The Contractor shall not combine waste materials from other projects with material from this project.

(8) The Contractor shall obtain for the City a hazardous waste generator identification number and will sign the manifest as the generator, if necessary.

(9) No material shall be transported until approved by the DDC.

c. Disposal Facilities

(1) The Contractor shall use only the TSD facility(ies) identified in the WHP for the performance of the work. Substitutions or additions shall not be permitted without prior written approval from the Program Management, OEGS, and, if approved, shall be at no extra cost to the City.

(2) The Contractor shall be responsible for acceptance of the material at an approved TSD facility, for ensuring that the facility is properly permitted to accept the stated material, and that the facility provides the stated storage and/or disposal services.

(3) The DDC reserves the right to contact and visit the disposal facility and regulatory agencies to verify the agreement to accept the stated material and to verify any other information provided. This does not in any way relieve the Contractor of his responsibilities under this Contract.

(4) In the event that the identified and approved facility ceases to accept the stated materials or the facility ceases operations, it is the Contractor's

responsibility to locate an alternate approved and permitted facility(ies) for accepting materials. The Contractor is responsible for making the necessary arrangements to utilize the facility(ies), and the alternate facility(ies) must be approved in writing by the DDC in the same manner and with the same requirements as for the original facility(ies). This shall be done with no extra cost or delay to the City.

d. Equipment and Vehicle Decontamination

(1) The Contractor shall design and construct a portable decontamination station to be used to decontaminate equipment and vehicles exiting the exclusion zone. The cost for this work shall be paid under Item 8.01 S – Health and Safety.

8.01 W1.3 METHOD OF MEASUREMENT

The quantity for on-site treatment and discharge or off-site disposal shall be on a per day basis.

8.01 W1.4 PRICE TO COVER

A. The per day price bid for Item 8.01 W1 shall include the cost of furnishing all labor, materials, equipment, plan, and insurance for handling, transportation, disposal, documentation, permits, hauling, mobilization and demobilization, and any other incidentals thereto to complete the work.

B. The Contractor will not be paid for water that is within the DEP Sewer Discharge Limits.

Payment will be made under:

ITEM NUMBER	ITEM	PAYMENT UNIT
8.01 W1	Removal, Treatment and Disposal/Discharge of Contaminated Water	Day

ITEM 8.01 W2 SAMPLING AND TESTING OF CONTAMINATED WATER

8.01 W2.1 WORK TO INCLUDE

A. Description

The work shall consist of sampling and testing of potentially contaminated groundwater, surface runoff within the excavated area and all contaminated water generated during the decontamination process.

B. Sampling and Testing

1. The Contractor is responsible, at a minimum, for sampling and testing of contaminated water for the DEP Sanitary/Combined and Storm Sewer Effluent Limit concentrations as listed in Attachment 1, and in accordance with the DDC-approved SSP/FSP and the Investigation HASP, as specified in 8.01 C2. The quality of the data is the Contractor's responsibility. Any additional testing required by the Federal, State and/or disposal facilities shall be included in the bid price of this Item.

2. All sampling and testing shall be conducted by a person trained in sampling protocols using accepted standard practices and/or the DEC sampling guidelines and protocols.

3. All sample containers shall be marked with legible sample labels which shall indicate the project name, sample location and/or container, the sample number, the date and time of sampling, preservatives utilized, how the sample was chilled to 4 degrees Celsius, and other information that may be useful in determining the character of the sample.

4. Chain-of-custody shall be tracked from laboratory issuance of sample containers through receipt of the samples.

5. The Contractor shall maintain a bound sample log book. The Contractor shall provide the DDC access to it at all times and shall turn it over to the DDC in good condition at the completion of the work. The following information, as a minimum, shall be recorded to the log:

   a. Sample identification number

   b. Sample location

   c. Field observation

   d. Sample type

   e. Analyses

   f. Date/time of collection

   g. Collector's name

   h. Sample procedures and equipment used

   i. Date sent to laboratory/name of laboratory

6. Only dedicated sampling equipment may be used to collect these samples. All equipment involved in field sampling must be decontaminated before being brought to the site, and must be properly disposed of after use.

7. Samples shall be submitted to the Contractor's laboratory within the holding times for the parameters analyzed.

8. All analyses must be done by a laboratory that has received approval from the DOH's ELAP for the methods to be done. The Contractor must specify the laboratory in the WHP.

9. Analytical results for water discharged to the sewer and for off-site disposal must be submitted to the DDC no later than five (5) days after sample collection.

10. The City reserves the right to direct the Contractor to conduct alternative sampling in lieu of the parameters described above, if the situation warrants. The substitute sampling parameters shall be of equal or lesser monetary value than those described above, as determined by industry laboratory pricing standards.

8.01 W2.2 METHOD OF MEASUREMENT

Quantities for samples shall be measured as the number of sets of samples that are tested for the DEP Sanitary/Combined and Storm Sewer Effluent Limit concentrations. A set shall be defined as one (1) representative sample analyzed for the full range of DEP parameters as specified in attachment 1.

8.01 W2.3 PRICE TO COVER

The unit price bid per set for Item 8.01 W2 shall include the cost of furnishing all labor, materials, equipment, plan, and insurance for handling, transport, sampling, testing, documentation, permits, other incidentals necessary to complete the work of sampling and testing of contaminated water. Any additional costs incurred by the Contractor for sampling and testing of contaminated water shall be included in the bid price of this Item.

Payment will be made under:

ITEM NUMBER	ITEM	PAYMENT UNIT
8.01 W2	Sampling and Testing of Contaminated Water	Set

ATTACHMENT 1: NYCDEP LIMITATIONS FOR DISCHARGE TO STORM, SANITARY/COMBINED SEWER

NEW YORK CITY DEPARTMENT OF ENVIRONMENTAL PROTECTION
BUREAU OF WASTEWATER TREATMENT

Limitations for Effluent to Sanitary or Combined Sewers

Parameter[1]	Daily Limit	Units	Sample Type	Monthly Limit
Non-polar material[2]	50	mg/l	Instantaneous	---
pH	5-11	SU's	Instantaneous	---
Temperature	< 150	Degree F	Instantaneous	---
Flash Point	> 140	Degree F	Instantaneous	---
Cadmium	2 0.69	mg/l mg/l	Instantaneous Composite	--- ---
Chromium (VI)	5	mg/l	Instantaneous	---
Copper	5	mg/l	Instantaneous	---
Lead	2	mg/l	Instantaneous	---
Mercury	0.05	mg/l	Instantaneous	---
Nickel	3	mg/l	Instantaneous	---
Zinc	5	mg/l	Instantaneous	---
Benzene	134	ppb	Instantaneous	57
Carbontetrachloride	---	---	Composite	---
Chloroform	---	---	Composite	---
1,4 Dichlorobenzene	---	---	Composite	---
Ethylbenzene	380	ppb	Instantaneous	142
MTBE (Methyl-Tert-Butyl-Ether)	50	ppb	Instantaneous	---
Naphthalene	47	ppb	Composite	19
Phenol	---	---	Composite	---
Tetrachloroethylene (Perc)	20	ppb	Instantaneous	---
Toluene	74	ppb	Instantaneous	28
1,2,4 Trichlorobenzene	---	---	Composite	---
1,1,1 Trichloroethane	---	---	Composite	---
Xylenes (Total)	74	ppb	Instantaneous	28
PCB's (Total)[3]	1	ppb	Composite	---
Total Suspended Solids (TSS)	350[4]	mg/l	Instantaneous	---
CBOD[5]	---	---	Composite	---
Chloride[5]	---	---	Instantaneous	---
Total Nitrogen[5]	---	---	Composite	---
Total Solids[5]	---	---	Instantaneous	---

1 All handling and preservation of collected samples and laboratory analyses of samples shall be performed in accordance with 40 C.F.R. pt. 136. If 40 C.F.R. pt. 136 does not cover the

pollutant in question, the handling, preservation, and analysis must be performed in accordance with the latest edition of "Standard Methods for the Examination of Water and Wastewater." All analyses shall be performed using a detection level less than the lowest applicable regulatory discharge limit. If a parameter does not have a limit, then the detection level is defined as the least of the Practical Quantitation Limits identified in NYSDEC's Analytical Detectability and Quantitation Guidelines for Selected Environmental Parameters, December 1988

2 Analysis for ***non-polar materials*** must be done by EPA method 1664 Rev. A. Non-Polar Material shall mean that portion of the oil and grease that is not eliminated from a solution containing N–Hexane, or any other extraction solvent the EPA shall prescribe, by silica gel absorption.

3 Analysis for PCB=s is required if ***both*** conditions listed below are met:
1) if proposed discharge ≥ 10,000 gpd;
2) if duration of a discharge > 10 days.
Analysis for PCB=s must be done by EPA method 608 with MDL=<65 ppt. PCB's (total) is the sum of PCB-1242 (Arochlor 1242), PCB-1254 (Arochlor 1254), PCB-1221 (Arochlor 1221), PCB-1232 (Arochlor 1232), PCB-1248 (Arochlor 1248), PCB-1260 (Arochlor 1260) and PCB-1016 (Arochlor 1016).

4 For discharge ≥ 10,000 gpd, the TSS limit is 350 mg/l. For discharge < 10,000gpd, the limit is determined on a case by case basis.

5 Analysis for Carbonaceous Biochemical Oxygen Demand (CBOD), Chloride, Total Solids and Total Nitrogen are required if proposed discharge ≥ 10,000 gpd.

ATTACHMENT 2: APPLICABLE REGULATIONS

Applicable regulations include, but are not limited to:

1. 49 CFR 100 to 179 - DOT Hazardous Materials Transport and Manifest System Requirements
2. New York State Department of Environmental Conservation (DEC), Spills Technology and Remediation Series (STARS) Memo #1
3. 6 NYCRR 360-1 DEC Solid Waste Management Facilities
4. 6 NYCRR 364- Waste Transporter permits
5. Local restrictions on transportation of waste/debris
6. 40 CFR 260 to 272 - Hazardous Waste Management (RCRA)
7. 6 NYCRR 371 - Identification and Listing of Hazardous Wastes
8. 6 NYCRR 372 - Hazardous Waste Manifest System and Related Standards for Generators, Transporters and Facilities
9. 6 NYCRR 373-1 - Hazardous Waste Treatment, Storage and Disposal Facility Permitting Requirements
10. 6 NYCRR 376 - Land Disposal Restrictions
11. Posted weight limitations on roads or bridges
12. Transportation Skills Programs, Inc. 1985 - Hazardous Materials and Waste Shipping Papers and Manifests
13. Other local restrictions on transportation of waste/debris
14. Occupational Safety and Health Administration (OSHA), Standards and Regulations, 29 CFR 1910 (General Industry)
15. OSHA 29 CFR 1910.120 Hazardous Waste Operations and Emergency Response
16. OSHA Safety and Health Standards 29 CFR 1926 (Construction Industry)
17. OSHA 29 CFR 1910.146 Confined Space Entry Standard
18. Standard Operating Safety Guidelines, EPA Office of Emergency and Remedial Response Publication, 9285.1-03
19. NIOSH / OSHA / USCG / EPA Occupational Safety and Health Guidance Manual for Hazardous Waste Site Activities (1986)
20. U.S. Department of Health and Human Services (DHHS) "NIOSH Sampling and Analytical Methods," DHHS (NIOSH) Publication 84-100
21. ANSI, Practice for Respiratory Protection, Z88.2 (1980)
22. ANSI, Emergency Eyewash and Shower Equipment, Z41.1 (1983)
23. ANSI, Protective Footwear, Z358.1 (1981)
24. ANSI, Physical Qualifications for Respirator Use, Z88.6 (1984)
25. ANSI, Practice for Occupational and Educational Eye and Face Protection, Z87.1 (1968)
26. Water Pollution Control Federation "Manual of Practice No. 1, Safety in Wastewater Works"

27. NFPA No. 327 "Standard Procedures for Cleaning and Safeguarding Small Tanks and Containers"
28. Occupational Safety and Health Act Confined Space Entry Standard 29 CFR 1910.146.87
29. Department of Transportation 49 CFR 100 through 179
30. Department of Transportation 49 CFR 387 (46 FR 30974, 47073)
31. Environmental Protection Agency 40 CFR 136 (41 FR 52779)
32. Environmental Protection Agency 40 CFR 262 and 761
33. Resource Conservation and Recovery Act (RCRA)
34. Any transporter of hazardous or non-hazardous materials shall be licensed in the State of New York and all other states traversed in accordance with all applicable regulations.

ATTACHMENT 3: DEFINITIONS

Contaminated Groundwater and Decontamination Fluids: Groundwater within the excavation trench or decontamination water that contains regulated compounds above the NYCDEP Discharge to Sanitary/Combined Sewer Effluent limits.

Disposal or Treatment Facility: A facility licensed to accept either non-hazardous regulated waste or hazardous waste for either treatment or disposal.

Exclusion Zone: Work area that will be limited to access by Contractor personnel specifically trained to enter the work area only. The exclusion zone will be set up to secure the area from the public and untrained personnel. The project health and safety program will apply to all construction personnel including persons entering the work area.

Hazard Assessment: An assessment of any physical hazards that may be encountered on a work site.

Hazardous Soils: Soils that exhibit any of the characteristics of a hazardous waste, namely ignitability, corrosivity, reactivity, and toxicity, as defined in 6 NYCRR Part 371, Section 371.3 and 40 CFR Section 261.

Hazardous Substance Evaluation: An evaluation of the possible or known presence of any hazardous substances that may be encountered on a job site. This evaluation is included in the Health and Safety Plan and will include the identification and description of any hazardous substances expected to be encountered. Material Safety Data Sheets (MSDS) will be included for each substance.

Health and Safety Plan: A plan employed at a work site that describes all the measures that will be taken to assure that all work is conducted in a safe manner, and that the health of the workers and the public will be insured.

Material Handling Plan: A plan outlining the methods that will be employed to handle, transport and dispose of contaminated materials.

Non-Hazardous Contaminated Soils: Soils which exhibit a distinct chemical or petroleum odor, or exhibit elevated photoionization detector readings but are not classified as hazardous waste under 6 NYCRR Part 371, Section 371.3 and 40 CFR Section 261.

New York State Health Department's Environmental Laboratory Approval Program: A program by which the state of New York approves and accredits environmental testing laboratories.

PCBs: Polychlorinated biphenyls are a group of toxic compounds commonly used as a coolant in transformers and other electrical components.

Photoionization Detector: A hand held instrument used to measure volatile organic compounds in air. The instrument ionizes the organic molecules through the use of an ultraviolet lamp.

RCRA Hazardous Waste Characteristics: Characteristics of a material which may indicate the material is hazardous. These include: ignitability corrosivity, reactivity, and toxicity.

Total Petroleum Hydrocarbons: An analytical procedure used to determine the total amount of petroleum compounds in a material.

ATTACHMENT 4: PHASE II SUBSURFACE CORRIDOR INVESTIGATION REPORT

- Final -

Phase II Subsurface Corridor Investigation Report

For

Storm Sewer Extension and Water Main Replacement
Cross Island Parkway West Service Road between 90th and 87th Avenues
Queens, New York

DDC PROJECT NO. SEQ200531

WORK ORDER NO. 12709-LIRO-3-11758

CONTRACT REGISTRATION NO. 20151405569

Prepared for:

Department of Design and Construction

Office of Environmental and Geotechnical Services

30-30 Thomson Avenue, Third Floor

Long Island City, New York 11101

Prepared by:

LiRo Engineers, Inc.

703 Lorimer Street

Brooklyn, New York 11211

PROJECT NO. 15-008-0265

August 3, 2017

TABLE OF CONTENTS

EXECUTIVE SUMMARY **ES-1**

1.0 INTRODUCTION **1**
1.1 SUMMARY OF PREVIOUS ENVIRONMENTAL INVESTIGATIONS 1
1.2 SCOPE OF WORK 2

2.0 CORRIDOR INFORMATION **4**
2.1 CORRIDOR LOCATION, DESCRIPTION AND USE 4
2.2 DESCRIPTION OF SURROUNDING PROPERTIES 4
2.3 CORRIDOR AND REGIONAL TOPOGRAPHIC SETTING 4
2.4 CORRIDOR AND REGIONAL GEOLOGY 4
2.5 CORRIDOR AND REGIONAL HYDROGEOLOGY 5

3.0 CORRIDOR EVALUATION **7**
3.1 SOIL QUALITY INVESTIGATION 7
3.2 GROUNDWATER QUALITY INVESTIGATION 8
3.3 LABORATORY ANALYSES 8
3.4 DATA EVALUATION 9

4.0 FINDINGS **10**
4.1 FIELD SCREENING 10
4.2 SOIL AND GROUNDWATER LABORATORY ANALYTICAL RESULTS 10
4.2.1 Volatile Organic Compounds (VOCs) in Soil 10
4.2.2 Semi Volatile Organic Compounds (SVOCs) in Soil 10
4.2.3 Target Analyte List (TAL) Metals in Soil 10
4.2.4 Pesticides in Soil 11
4.2.5 Polychlorinated Biphenyls (PCBs) in Soil 11
4.2.5 Waste Characterization of Soil 11
4.2.6 Analysis of NYCDEP Parameters in Groundwater 11

5.0 CONCLUSIONS AND RECOMMENDATIONS **12**

6.0 STATEMENT OF LIMITATIONS **14**

Tables
1 Summary of Environmental Boring Data
2 Summary of TCL VOCs Detected in Soil
3 Summary of SVOCs Detected in Soil
4 Summary of TAL Metals Detected in Soil
5 Summary of Pesticides Detected in Soil
6 Summary of PCBs Detected in Soil
7 Summary of Waste Characterization of Soil

Figures
1 Topographic Corridor Location Map
2 Soil Boring Location Map

Appendices
A Soil Boring Location Sketch
B Geologic Boring Logs
C Laboratory Analytical Results – Included on Attached CD

EXECUTIVE SUMMARY

On behalf of the New York City Department of Design and Construction (DDC), LiRo Engineers, Inc. (LiRo) conducted a Phase II Subsurface Corridor Investigation (SCI) of the SEQ200531 Corridor consisting of the Cross Island Parkway West Service Road between 90th and 87th Avenues (the "Corridor") in the Bellerose section of the Borough of Queens, New York. Excavation for the extension of storm sewers to alleviate flooding and chronic ponding in the area and replacement of water mains to improve distribution is proposed along the Corridor.

The Corridor is approximately 2,849-foot (0.54-miles) long and is comprised of the following street segments:

Street Segments	Length (feet)
239th Street from the dead end south of 87th Avenue to 110 feet north of 87th Avenue	281
241st Street from 87th Avenue to 30 feet north of 87th Avenue	82
Cross Island Parkway Service Road from approximately 80 feet north of 90th Avenue to 87th Avenue	1,183
87th Avenue from 239th Street to Cross Island Parkway Service Road	1,048
88th Avenue from Cross Island Parkway Service Road to approximately 15 feet west of Cross Island Parkway Service Road	60
88th Drive from Cross Island Parkway Service Road to approximately 30 feet west of Cross Island Parkway Service Road	75
88th Road from Cross Island Parkway Service Road to approximately 15 feet west of Cross Island Parkway Service Road	60
89th Avenue from Cross Island Parkway Service Road to approximately 15 feet west of Cross Island Parkway Service Road	60

This project is subject to additional review under City Environmental Quality Review (CEQR) by New York City Department of Environmental Protection (NYCDEP), since a portion of the proposed infrastructure work will be taking place in areas of the Corridor that are designated as "No Title."

LiRo prepared a Phase I Corridor Assessment Report (Phase I CAR) dated June 14, 2016, which presented the results of a survey conducted along the Corridor to assess the presence of potential sources of subsurface contamination within, and in the immediate vicinity of, the Corridor. The LiRo Phase I CAR report identified one (1) "High" risk site and six (6) "Moderate" risk sites along the Corridor and recommended the performance of a Phase II SCI.

The Phase II SCI was conducted to determine if the Corridor's environmental condition may potentially impact proposed construction activities. The proposed depth of excavation for the work ranges from 8 to 31 feet below grade (ftbg), mostly at 10 ftbg. Based on the review of available information provided by the DDC, LiRo proposed the advancement of nine (9) soil borings along the Corridor area, three (3) of which were proposed to be converted to temporary well points (TWPs), in order to characterize soils and groundwater (if observed) that may be encountered during construction.

The Phase II SCI was conducted from June 15 through 20 and on July 12, 2017 and consisted of the following components:

Scope of Work

- The advancement of nine (9) soil borings (SB-01 through SB-09) to terminal depths ranging between 8 and 31 ftbg and the field screening, classification and identification of soil samples, including photoionization detector (PID) readings and visual and olfactory indicators of contamination (staining, odors);

- The samples collected as part of this Phase II SCI were collected to comply with the NYCDEP CEQR protocols;

- The collection of one (1) grab soil sample from the 0-2 ftbg depth interval and one (1) grab sample from the bottom 6-inch interval of the boring. In total, 18 grab soil samples were collected and analyzed for the following parameters: (1) United States Environmental Protection Agency (USEPA) Target Compound List (TCL) volatile organic compounds (VOCs); (2) USEPA TCL semi-volatile organic compounds (SVOCs); (3) polychlorinated biphenyls (PCBs); (4) USEPA pesticides; and, (5) USEPA Target Analyte List (TAL) metals;

- The collection of nine (9) composite waste characterization soil samples from grade to the bottom of the boring which were analyzed for the following parameters: (1) Total Petroleum Hydrocarbon Diesel Range Organics/Gasoline Range Organics (TPH DRO/GRO); (2) Resource Conservation and Recovery Act (RCRA) Characteristics; and, (3) Toxicity Characteristic Leaching Procedure (TCLP) RCRA metals;

- The collection of one (1) duplicate soil sample (SB-09-30.5-31-DUP) and two (2) trip blanks (Trip Blank #1 and Trip Blank #2) in accordance with NYCDEP CEQR protocols. The duplicate soil sample was analyzed for TCL VOCs, TCL SVOCs, PCBs, pesticides, and TAL metals. The trip blank included an unopened water sample prepared by the laboratory which traveled with the laboratory coolers and was analyzed for TCL VOCs. An equipment blank was not collected because soil sampling was conducted with disposable sampling equipment; and,

- The preparation of this report, which includes tables summarizing the laboratory analytical results and figures depicting boring locations, significant site features and, if applicable, contamination occurrence and distribution.

Since groundwater was not encountered during drilling, no temporary well points (TWPs) were installed. Therefore, no groundwater samples were collected.

Soil laboratory analyses were provided by Chemtech of Mountainside, New Jersey, a New York State Department of Health (NYSDOH) approved laboratory (No. 11376). In order to evaluate the subsurface soil quality, laboratory analytical results were compared with the regulatory standards identified in (1) New York State Department of Environmental Conservation (NYSDEC) Subpart 375-6: Remedial Program Unrestricted and Restricted Use (Track 1 and Track 2) Soil Cleanup Objectives (SCOs); and/or, (2) Toxicity Characteristic Regulatory Levels for Hazardous Waste published in RCRA and 6 New York Codes, Rules, and Regulation (NYCRR) Part 371.

Based on the evaluation of the field screening data and the laboratory analytical results, and a comparison to applicable regulatory standards, the following findings are presented:

Findings

- The subsurface soils encountered during this Phase II SCI consisted predominantly of reddish-brown to brown fine to coarse sand with some gravel from grade up to 31 ftbg. Man-made materials (brick, concrete, etc.) and/or wood fragments, which are indicative of urban fill, were not encountered in the Corridor.

- Groundwater and bedrock were not encountered during the Phase II SCI.

- Field screening (i.e., PID readings and visual and olfactory observations) did not identify impacted soils within the Corridor.

- One (1) VOC, methylene chloride, was detected in all 18 grab samples collected at concentrations below the Unrestricted Use (Track 1) SCO. Methylene chloride is a common laboratory cross contaminant and is most likely not representative of subsurface conditions. SVOCs, including benzo(a)anthracene, benzo(1)pyrene, benzo(b)fluoranthene, benzo(g,h,i)perylene, bis(2-ethylhexyl)phthalate, butylbenzylthalate, chrysene, dimethylphthalate, fluoranthene, indeno(1,2,3-cd)pyrene, phenanthrene, phenol, and pyrene were detected in all 18 grab samples collected at concentrations below their corresponding Unrestricted Use (Track 1) and Restricted Use (Track 2) SCOs.

- Two (2) pesticides, 4,4'-DDE and 4-4'DDT, were detected in three (3) of the 18 grab samples collected (SB-03-0-2, SB-07-0-2, and SB-08-0-2) at concentrations exceeding their Unrestricted Use (Track 1) SCOs. PCBs were detected in one of the 18 grab samples collected (SB-03-0-2) at a concentration exceeding the Unrestricted Use (Track 1) SCO. TAL metals, including cadmium, lead, mercury, selenium, and zinc, were detected in six (6) of the 18 grab samples collected (SB-02-0-2, SB-03-0-2, SB-04-0-2, SB-07-0-2, SB-08-0-2, and SB-09-0-2) at concentrations exceeding either the Unrestricted Use (Track 1) or Restricted Use (Track 2) Residential SCOs. Other TAL metals were detected, but not exceeding Unrestricted Use (Track 1) SCOs.

- Ignitability (flash point), reactivity (cyanide and sulfide), and corrosivity (pH) of the samples were within the acceptable RCRA ranges. TCLP RCRA metals were not detected at concentrations exceeding RCRA limits in the nine (9) composite waste characterization soil samples collected. TPH-DRO were detected at concentrations ranging from approximately 3.768 mg/kg to 5.131 mg/kg in all nine (9) samples collected. TPH-GRO were not detected in any of the nine (9) samples collected. There are no regulatory standards for TPH-DRO and TPH-GRO.

Conclusions and Recommendations

Based on the evaluation of the field screening data and the laboratory analytical results, and a comparison to applicable regulatory standards, the following conclusions are presented:

- Field screening (i.e., PID readings and visual and olfactory observations) did not identify any petroleum-impacted soils within the Corridor;

- Laboratory analytical results identified petroleum (TPH DRO/GRO), PCB, pesticide, and metal impacted soils throughout the Corridor. The presence of elevated concentrations of petroleum components, PCBs, pesticides, and metals in subsurface soils in parts of the Corridor may be

attributed to: (a) residuals from releases from the "High" and "Moderate" risk sites identified on and in the vicinity of the Corridor; and/or, (b) natural background levels (metals);

- The subsurface soil samples collected from the Corridor did not exhibit hazardous waste characteristics; and,

- Groundwater was not encountered during the Corridor subsurface investigation.

Based on the results of the field investigation and laboratory analytical results, LiRo recommends the following:

- The Contract documents should identify provisions and a contingency for managing, handling, transporting and disposing of contaminated non-hazardous soil. The Contractor should be required to submit a Material Handling Plan, to identify the specific protocol and procedures that will be employed to manage the waste in accordance with applicable regulations;

- Due to the presence of PCBs, pesticides, and metals, dust control procedures are recommended during excavation activities to minimize the creation and dispersion of fugitive airborne dust. The Contractor should implement dust control measures to minimize potential of migrating fugitive airborne contaminants released as a direct result of construction. A Community Air Monitoring Plan (CAMP) shall be developed in accordance with NYSDEC Division of Environmental Remediation 10 (DER-10) Regulations. The CAMP requires real-time monitoring for VOCs and particulates (i.e., dust) at the downwind perimeter of each designated work area when certain activities are in progress at contaminated sites. The CAMP is intended to provide a measure of protection for the downwind community from potential airborne contaminant releases as a direct result of investigative and remedial work activities. Specific requirements shall be reviewed for each situation in consultation with NYSDOH to ensure proper applicability;

- Groundwater was not encountered during the Phase II SCI activities and, therefore, dewatering may not be required. However, should dewatering become necessary during construction activities within the Corridor, the contractor should be required to obtain New York City Department of Environmental Protection (NYCDEP) sewer discharge permit. If discharge into storm sewers or surface waters is required during dewatering, it may be done under the appropriate NYSDEC State Pollutant Discharge Elimination System (SPDES) permit. Additional sampling and laboratory analysis may be required to satisfy NYSDEC requirements prior to discharge into storm sewers or surface waters; and,

- Before beginning any excavation activity, the contractor shall submit a Corridor-specific health and safety plan (HASP) that will meet the requirements set forth by the Occupational, Safety and Health Administration (OSHA), the NYSDOH and any other applicable regulations. The HASP should identify the possible locations and risks associated with the potential contaminants that may be encountered, and the administrative and engineering controls that will be utilized to mitigate concerns (i.e., dust control procedures for PCBs, pesticides, and metals).

1.0 INTRODUCTION

On behalf of the New York City Department of Design and Construction (DDC), LiRo Engineers, Inc. (LiRo) conducted a Phase II Subsurface Corridor Investigation (SCI) of the SEQ200531 Corridor consisting of the Cross Island Parkway West Service Road between 90th and 87th Avenues (the "Corridor") in the Bellerose section of the Borough of Queens, New York. Excavation for the extension of storm sewers to alleviate flooding and chronic ponding in the area and replacement of water mains to improve distribution is proposed along the Corridor.

The Corridor is approximately 2,849-foot long and is comprised of the following street segments:

Street Segments	Length (feet)
239th Street from the dead end south of 87th Avenue to 110 feet north of 87th Avenue	281
241st Street from 87th Avenue to 30 feet north of 87th Avenue	82
Cross Island Parkway Service Road from approximately 80 feet north of 90th Avenue to 87th Avenue	1,183
87th Avenue from 239th Street to Cross Island Parkway Service Road	1,048
88th Avenue from Cross Island Parkway Service Road to approximately 15 feet west of Cross Island Parkway Service Road	60
88th Drive from Cross Island Parkway Service Road to approximately 30 feet west of Cross Island Parkway Service Road	75
88th Road from Cross Island Parkway Service Road to approximately 15 feet west of Cross Island Parkway Service Road	60
89th Avenue from Cross Island Parkway Service Road to approximately 15 feet west of Cross Island Parkway Service Road	60

This project is subject to additional review under City Environmental Quality Review (CEQR) by New York City Department of Environmental Protection (NYCDEP), since a portion of the proposed infrastructure work will be taking place in areas of the Corridor that are designated as "No Title."

1.1 Summary of Previous Environmental Investigations

LiRo prepared a Phase I Corridor Assessment Report (Phase I CAR) dated June 14, 2016, which presented the results of a survey conducted along the Corridor to assess the presence of potential sources of subsurface contamination within, and in the immediate vicinity of, the Corridor. The survey also included a review of fire insurance maps to document historical use and a limited review of the New York State databases to identify sites that are known to be contaminated.

The LiRo Phase I CAR report identified one (1) "High" risk sites and six (6) "Moderate" risk sites along the Corridor.

The Phase I CAR recommended a Phase II SCI which will consist of soil borings, temporary well points (TWPs), and soil and groundwater sampling to determine whether the one (1) "High" and six (6) "Moderate" risk sites have impacted the Corridor. The final "High" and "Moderate" risk sites identified in the LiRo Phase I CAR are listed below:

"High" Risk Site:

No.	Facility Name	Address	Map ID
1	Former NY and Queens Gas Company (currently townhouses and residences)	Block bound by 86th Rd., 87th Ave., 86th Ave., and Service Rd.	H1

"Moderate" Risk Sites:

No.	Facility Name	Address	Map ID
1	Underground Storage Tank (UST) Site (currently St. Gregory Church and Rectory)	242-20 88th Ave.	M1
2	NY Spill Site (Closed) – (currently a roadway intersection)	88th Dr. and 242nd St.	M2
3	Leaking Tank (LTANK) Site (Closed) – (currently a residence)	242-23 89th St.	M3
4	UST, Chemical Bulk Storage (CBS), and LTANK (Closed) Site (currently YMCA)	238-10 Hillside Ave.	M4
5	UST and LTANK (Closed) Site (currently St. Gregory the Great School)	244-44 87th Ave.	M5
6	Former Motorcycle Sales and Service Facility (currently an Indian Temple)	24225 Braddock Ave.	M6

1.2 Scope of Work

The Phase II SCI consisted of a field investigation, laboratory analyses, and the preparation of this report, which includes tables summarizing the laboratory analytical results and figures depicting boring locations, significant site features and, if applicable, contamination occurrence and distribution. Drilling activities for the field investigation were performed by Aquifer Drilling and Testing, Inc. (ADT) of Mineola, New York. Oversight of drilling activities was performed by LiRo. Laboratory analyses were provided by Chemtech of Mountainside, New Jersey, a NYS Department of Health (NYSDOH) approved laboratory (No. 11376). Field derived Quality Assurance/Quality Control (QA/QC) samples (i.e., field blanks, trip blanks, duplicates) were collected for this project. The field investigation was conducted from June 15 through 20 and on July 12, 2017 and consisted of the following components:

- The advancement of nine (9) soil borings (SB-01 through SB-09) to terminal depths ranging between 8 and 31 ftbg;

- The soil borings were advanced using a GeoProbe direct push drill rig. Prior to direct push advancement, soil borings were cleared to a depth of 6 feet using a hand auger and/or a vacuum excavator (Vacex). Soil samples were collected using 4-foot long or 5-foot long, 2-inch diameter Macro Core stainless steel samplers equipped with polyvinyl chloride (PVC) liners. In addition, a Health and Safety Plan was prepared prior to commencing field work.

- Field screening, classification, and identification of soils from the ground surface to the bottom of each boring. Soil samples were visually classified in the field using the Unified Soil Classification System (USCS). Field screening consisted of visual and olfactory indicators of impacts as well as screening with a photoionization detector (PID).

- The collection of one (1) composite and two (2) grab samples from each of the nine (9) soil boring locations (SB-01 through SB-09). The composite samples were comprised of soil from the entire boring column. The grab samples were collected from the 0 to 2 ftbg interval and from the bottom 6-inch interval in each boring.

- Laboratory analysis of the grab samples for: (1) United States Environmental Protection Agency (USEPA) Target Compound List (TCL) volatile organic compounds (VOCs) by USEPA Method 8260B; (2) TCL Semi-Volatile Organic Compounds (SVOCs) via United States Environmental Protection Agency (USEPA) Method 8270C; (3) Target Analyte List (TAL) Metals via USEPA 6010/7000 Series Methods; (4) Polychlorinated Biphenyls (PCBs) via USEPA Method 3550B/8082; and, (5) Pesticides via USEPA Method 8081;

- Laboratory analysis of the composite samples for (1) Total Petroleum Hydrocarbon Diesel Range Organics/Gasoline Range Organics (TPH DRO/GRO) via USEPA Method 8015B; (2) Resource Conservation and Recovery Act (RCRA) Characteristics via USEPA SW-846; and, (3) Toxicity Characteristic Leaching Procedure (TCLP) RCRA Metals via USEPA SW-846.

- The collection of one (1) duplicate soil sample (SB-09-30.5-31-DUP) and two (2) trip blanks (Trip Blank #1 and Trip Blank #2) in accordance with NYCDEP CEQR protocols. The duplicate soil sample was analyzed for TCL VOCs, TCL SVOCs, PCBs, pesticides, and TAL metals. The trip blank included an unopened water sample prepared by the laboratory which traveled with the laboratory coolers and was analyzed for TCL VOCs. An equipment blank was not collected because soil sampling was conducted with disposable sampling equipment; and,

- The preparation of this report, which includes tables summarizing the laboratory analytical results and figures depicting boring location, significant site features and, if applicable, contamination occurrence and distribution.

2.0 CORRIDOR INFORMATION

2.1 Corridor Location, Description and Use

The approximately 2,849-foot (0.54-mile) long Corridor is located in the Bellerose section of the Borough of Queens, New York. Currently, the Corridor is used as public streets and includes all public utilities (i.e., sewer, water, natural gas, electric, and communication lines). Adjoining property usage consists primarily of residences, with the exception of a commercial/public operation including, but not limited to, St. Gregory Church and Rectory. One (1) property adjoining the Corridor, St. Gregory Church and Rectory, was noted as a property of potential environmental concern due to the reported presence of a UST. A map of the Corridor area is presented as Figures 2.

2.2 Description of Surrounding Properties

Surrounding property usage consists primarily of residences with a few commercial/public operations including, but not limited to, St. Gregory the Great School, a YMCA, and an Indian Temple. Two (2) properties in the surrounding area, St. Gregory the Great School and the Cross Island YMCA, were noted as properties of potential environmental concern due to the reported presence of USTs.

2.3 Corridor and Regional Topographic Setting

LiRo reviewed the United States Geologic Survey (USGS) 7.5-minute Topographic Quadrangle Maps for Jamaica, New York (1980) to determine topography at the Corridor. The Corridor exhibits a topographic elevation change of approximately 5 feet along the length of the Corridor. The approximate elevation of the Corridor ranges from 75 feet above mean sea level (msl) within the southerly portion of the Corridor to 80 feet above msl within the northerly portion of the Corridor. Under natural conditions, surface runoff is expected to follow the overall topography of the area, which slopes south. A copy of the topographic map is presented in Figure 1.

2.4 Corridor and Regional Geology

Site and regional geology and hydrogeology are based on information provided in the Geologic Map of New York State (Lower Hudson Sheet) and the USGS "Hydrogeologic Framework of Long Island, New York." Based on these sources, physiographically, Kings and Queens Counties are part of the Long Island Hydrogeologic System. In a roughly north-south cross section, the geology can be characterized as a wedge-shaped layer of Cretaceous and Pleistocene age sedimentary deposits, thickening to the south-southeast. Several impermeable clay layers are located within these sedimentary deposits, generally creating three (3) distinct aquifers. The deep aquifers in southeastern Kings and Queens Counties extend into Nassau and Suffolk Counties and are the sole source of drinking water for Nassau and Suffolk Counties and as such are protected in Kings and Queens Counties. However, the potable water supply for the Corridor comes from the City's municipal water system which is primarily withdrawn from the Catskills Reservoir in Upstate New York.

Bedrock is of Precambrian and Paleozoic age. The thickness of the unconsolidated sediment ranges from 0 to approximately 1,300 feet from north to south. Outcrops of metamorphic bedrock can be found along the northwest portions of Queens. The uppermost unconsolidated unit consists of Pleistocene glacial till and moraine deposits in the northern portions of the Kings and Queens Counties and glaciofluvial sediments

derived from melt-water of the retreating glaciers to the south. These deposits constitute the Upper Glacial Aquifer.

The Cretaceous age sediments are characterized by three (3) periods of deposition separated by periods of erosion. The lowermost unit, known as the Raritan Formation, was formed by streams and coalescing delta deposits. The formation has been divided into two (2) units, the Lloyd Sand Member and a conformable overlying clay unit (the Raritan Confining Unit).

The Magothy Formation was deposited in an environment dominated by streams and coalescing deltas. The coarse basal unit indicates an environment of high energy that decreased rapidly, resulting in deposition of finer sands and silts that make up the majority of the formation.

Several episodes of Pleistocene glaciation by a southward advance from New England and the Hudson River valley eroded the Cretaceous deposits. The unconformity that extends across most of Kings and Queens Counties between the Cretaceous deposits and the overlying sediments, represents glacial scouring and glaciofluvial activity. Evidence of ice contact with the underlying Cretaceous deposits is absent in the southern portion of Kings and Queens Counties, indicating the southernmost limit of the advancing ice sheets.

The oldest Pleistocene deposit, represented only on western Long Island and Kings and Queens Counties is the Jameco Gravel (Jameco Aquifer). It is a channel filling of gravel and coarse sands which may represent a paleo Hudson River.

The terminal moraine of the last glacial advance is represented by the Harbor Hill Moraine. The Harbor Hill Moraine trends southwest to northeast through central Kings and Queens Counties. The moraine deposits consist of poorly sorted silts, clays, sands and boulders and form the topographic highs in the area.

The subsurface soils encountered during this Phase II SCI consisted predominantly of reddish-brown to brown fine to coarse sand with some gravel from grade to 31 ftbg. Man-made materials (brick, concrete, etc.) and/or wood fragments, which are indicative of urban fill, were not encountered in the Corridor. Bedrock was not encountered during the Phase II SCI.

2.5 Corridor and Regional Hydrogeology

The first unconfined aquifer encountered in Kings and Queens Counties is the upper glacial aquifer. The depth to the water table varies but generally follows topography. Closer to sea level, groundwater depths can occur 5 to 10 ftbg. Generally, groundwater flow follows topographic elevation of the area with flow migrating from higher to lower elevations. The nearest surface water body is Lake Success, which is located approximately 2.3 miles northeast of the Corridor. Since this is located up-gradient of the Corridor, groundwater is not anticipated to flow toward this lake. Based on elevation, groundwater flow is anticipated to be to the south. Groundwater flow direction may also vary due to seasonal fluctuations in precipitation, local variation in geology, underground structures, or local dewatering operations. Groundwater was not encountered within any of the on-site borings (which extended to 31 ftbg) during the LiRo Phase II SCI.

Based on the National Wetland Inventory Mapper, the Corridor does not fall within a state or national wetland area. The nearest national wetland (PUBHx) is located approximately 0.75 miles south of the

Corridor. Based on the NYSDEC Environmental Resource Mapper, the nearest state wetland (LY-4) is located approximately 1 mile north of the Corridor.

Federal Emergency Management Agency (FEMA) Flood Insurance Rate Maps (FIRM) were accessed from the FEMA website. Panel 3605900205G, dated September 11, 2009, shows that the Corridor is located within Zone X, an area of minimal flooding.

3.0 CORRIDOR EVALUATION

LiRo provided oversight for the advancement of nine (9) soil borings and the collection of soil samples during the field investigation at the designated areas in the vicinity of the planned construction. The soil samples from the borings were transferred into laboratory supplied sample jars and properly labeled. The samples were stored with ice in a cooler to preserve the samples at 4° Celsius prior to and during shipment. A chain-of-custody was prepared prior to sample shipment. A summary of the field observations, including the location of the sites and the details of the soil borings, is provided in Table 1.

3.1 Soil Quality Investigation

Nine (9) soil borings (SB-01 through SB-09) were advanced to the following terminal depths:

- SB-01 and SB-04 – 15.0 ftbg;
- SB-02 – 8.0 ftbg;
- SB-03, SB-05, and SB-06 – 10.0 ftbg;
- SB-07 – 13.0 ftbg;
- SB-08 – 12.0 ftbg; and,
- SB-09 – 31.0 ftbg.

Prior to direct push advancement using a GeoProbe direct push drill rig, borings were cleared to a depth of 6 ftbg using a hand auger and/or a vacuum excavator. Soil samples were collected using 5-foot long, 2-inch diameter Macro Core stainless steel samplers equipped with PVC liners. Soil boring locations are shown on Figure 2. The designations and sampling intervals for the samples that were submitted to the laboratory are included in Table 1. Maps depicting each boring location are included in Appendix A. Boring logs are provided in Appendix B. The locations of each boring are described below:

- **SB-01** – Located on 239th Street, 10 feet south of 87th Avenue and 0.5 feet east of the 239th Street curb line.

- **SB-02** – Located on 87th Avenue, 162 feet west of 241st Street and 1 foot south of the 87th Avenue curb line.

- **SB-03** – Located on 87th Avenue, 135 feet east of 241st Street and 3 feet south of the 87th Avenue curb line.

- **SB-04** – Advanced in the vicinity of "High" risk site No. 1 and located on 87th Avenue, 141 feet west of Cross Island Parkway West Service Road and 4 feet south of the 87th Avenue curb line.

- **SB-05** – Advanced in the vicinity of "High" risk site No. 1 and "Moderate" risk sites Nos. 1 and 5 and located on Cross Island Parkway West Service Road, 90 feet south of 87th Avenue and 2 feet west of the Cross Island Parkway West Service Road curb line.

- **SB-06** – Advanced in the vicinity of "Moderate" risk site No. 1 and located on Cross Island Parkway West Service Road, 41 feet south of 88th Avenue and approximately 4 feet west of the Cross Island Parkway West Service Road curb line.

- **SB-07** – Advanced in the vicinity of "Moderate" risk site No. 1 and located on Cross Island Parkway West Service Road, 108 feet south of 88th Road and 2 feet west of the Cross Island Parkway West Service Road curb line.

- **SB-08** – Advanced in the vicinity of "Moderate" risk site No. 3 and located on Cross Island Parkway West Service Road, 89 feet north of 89th Avenue and 2 feet west of the Cross Island Parkway West Service Road curb line.

- **SB-09** – Advanced in the vicinity of "Moderate" risk site No. 3 and located on Cross Island Parkway West Service Road, 42 feet south of 89th Avenue and 3 feet west of the Cross Island Parkway West Service Road curb line.

Soil from each boring was classified and examined for visual evidence (i.e., staining, discoloration) and any olfactory indications (i.e., odors) of contamination. In addition, a PID was used to screen the soil for VOC vapors.

In order to identify representative conditions relative to the presence of TPH DRO/GRO, RCRA Characteristics, and TCLP RCRA metals over the entire soil column in each boring, composite soil samples were collected by mixing the soil from the entire column in a plastic Ziploc bag. One (1) composite sample was collected from each of the nine (9) soil borings.

To identify representative conditions relative to the presence of VOCs, SVOCs, PCBs, pesticides, and metals, grab samples were collected as follows:

(a) if groundwater was encountered within 5 ftbg in any boring, only one (1) soil sample was to be collected from either the most impacted interval, as identified via visual or olfactory methods or via PID readings (which was not the case), or the bottom 6-inch interval above the water table;

(b) if groundwater was not encountered within 5 ftbg, two (2) samples were to be collected: the first from the 0-2 ftbg depth (surface soil) (SB-01 through SB-09), and the second from either the most impacted interval (below 2 ftbg), as identified via visual or olfactory methods or via PID readings, the 6-inch interval above the water table (when encountered), or the bottom 6-inch interval (when recovery allowed).

3.2 Groundwater Quality Investigation

Since groundwater was not encountered during drilling, no TWPs were installed. Therefore, no groundwater samples were collected.

3.3 Laboratory Analyses

The soil samples were submitted to Chemtech, a NYSDOH approved laboratory (No. 11376). Field derived QA/QC samples (i.e., trip blank and duplicate) were collected for this project. Laboratory analytical reports are included in Appendix C.

The grab soil samples were analyzed for: (1) TCL VOCs by USEPA Method 8260B; (2) TCL SVOCs via USEPA Method 8270C; (3) PCBs via USEPA Method 3550B/8082; (4) pesticides via USEPA Method

8081; and, (5) TAL metals via USEPA 6010/7000 series Methods. The soil composite samples were analyzed for: (1) TPH DRO/GRO via USEPA Method 8015B; (2) RCRA Characteristics via USEPA SW-846; and, (3) TCLP RCRA Metals via USEPA SW-846.

3.4 Data Evaluation

In order to evaluate the subsurface soil quality, the laboratory analytical results of the grab and composite soil samples were compared with the regulatory standards identified in: (1) NYSDEC Subpart 375-6: Remedial Program Unrestricted Use (Track 1) and Restricted Use (Track 2) Soil Cleanup Objectives (SCOs); and/or, (2) Toxicity Characteristic Regulatory Levels for Hazardous Waste published in RCRA and 6 NYCRR Part 371.

4.0 FINDINGS

This section discusses the analytical data and findings for the activities discussed in Section 3.0. Boring logs can be found in Appendix B. Complete analytical data reports are included in Appendix C.

4.1 Field Screening

Field screening (i.e., PID readings and visual and olfactory observations) did not identify signs of impacted soils within the Corridor. Refer to Table 1 for a summary of environmental boring data.

4.2 Soil and Groundwater Laboratory Analytical Results

4.2.1 Volatile Organic Compounds (VOCs) in Soil

One (1) VOC, methylene chloride, was detected in all 18 grab samples collected. Methylene chloride was detected at concentrations below the Unrestricted Use (Track 1) SCO in each of the grab samples collected. Methylene chloride is a common laboratory cross contaminant and is most likely not representative of subsurface conditions. Refer to Table 2 for a summary of TCL VOC detections.

4.2.2 Semi Volatile Organic Compounds (SVOCs) in Soil

SVOCs, including benzo(a)anthracene, benzo(1)pyrene, benzo(b)fluoranthene, benzo(g,h,i)perylene, bis(2-ethylhexyl)phthalate, butylbenzylthalate, chrysene, dimethylphthalate, fluoranthene, indeno(1,2,3-cd)pyrene, phenanthrene, phenol, and pyrene were detected in all 18 grab samples collected at concentrations below their corresponding Unrestricted Use (Track 1) and Restricted Use (Track 2) SCOs. The detected SVOCs may be attributed to residuals from isolated releases in the area of the Corridor. Refer to Table 3 for a summary of TCL SVOC detections.

4.2.3 Target Analyte List (TAL) Metals in Soil

TAL metals, including cadmium, lead, mercury, selenium, and zinc, were detected in six (6) of the 18 grab samples collected at concentrations exceeding one (1) or more criteria as follows:

- SB-02-0-2 – cadmium, lead, mercury, and selenium each exceed Unrestricted Use (Track 1) SCOs;
- SB-03-0-2 – lead, mercury, and selenium each exceed Unrestricted Use (Track 1) SCOs;
- SB-04-0-2 – lead and selenium each exceed Unrestricted Use (Track 1) SCOs and mercury exceeds the Restricted Use (Track 2) Residential SCO;
- SB-07-0-2 – lead, mercury, selenium, and zinc each exceed Unrestricted Use (Track 1) SCOs;
- SB-08-0-2 – lead, mercury, selenium, and zinc each exceed Unrestricted Use (Track 1) SCOs; and,
- SB-09-0-2 – lead exceeding the Unrestricted Use (Track 1) SCO

All other TAL metals detections were below Unrestricted Use (Track 1) and Restricted Use (Track 2) SCOs. Refer to Table 4 for a summary of TAL metals detections.

4.2.4 Pesticides in Soil

Pesticides, including 4,4'-DDE and 4,4'-DDT, were detected in four (4) of the 18 grab soil samples collected at concentrations exceeding the Unrestricted Use (Track 1) SCOs as follows:

- SB-01-0-2 – 4,4'-DDT;
- SB-03-0-2 – 4,4'-DDE and 4,4'-DDT;
- SB-07-0-2 – 4,4'-DDT; and,
- SB-08-0-2 – 4,4'-DDE and 4,4'-DDT.

4,4'-DDD, alpha chlordane, and gamma chlordane were also detected in five (5) of the 18 grab soil samples collected at concentrations below the Unrestricted Use (Track 1) SCOs. Refer to Table 5 for a summary of the pesticides detections.

4.2.5 Polychlorinated Biphenyls (PCBs) in Soil

PCBs were detected in one (1) of the 18 grab soil samples collected (SB-03-0-2) at a concentration exceeding the Unrestricted Use (Track 1) SCO. PCBs were also detected in three (3) additional grab samples at concentrations below the Unrestricted Use (Track 1) SCO. Refer to Table 6 for a summary of the PCBs detections.

4.2.5 Waste Characterization of Soil

Ignitability (flash point), reactivity (cyanide and sulfide), and corrosivity (pH) of the samples were within the acceptable RCRA ranges. TCLP RCRA metals were not detected at concentrations exceeding RCRA limits in the nine (9) waste characterization soil samples collected. TPH-DRO were detected at concentrations ranging from approximately 3.768 mg/kg to 5.131 mg/kg in each of the nine (9) samples collected. TPH-GRO were not detected in any of the nine (9) samples collected. There are no regulatory standards for TPH-DRO and TPH-GRO. Analytical results will need to be compared to levels acceptable by the chosen receiving facility to determine appropriate waste characterization prior to off-site disposal. Refer to Table 7 for a summary of TCLP parameters, RCRA Characteristics, and TPH DRO/GRO results.

4.2.6 Analysis of NYCDEP Parameters in Groundwater

Since groundwater was not encountered during drilling, no TWPs were installed. Therefore, no groundwater samples were collected.

5.0 CONCLUSIONS AND RECOMMENDATIONS

Based on the evaluation of the field screening data and the laboratory analytical results, and a comparison to applicable regulatory standards, the following conclusions are presented:

- Field screening (i.e., PID readings and visual and olfactory observations) did not identify any petroleum-impacted soils within the Corridor;

- Laboratory analytical results identified petroleum (TPH DRO/GRO), PCB, pesticide, and metal impacted soils throughout the Corridor. The presence of elevated concentrations of petroleum components, PCBs, pesticides, and metals in subsurface soils in parts of the Corridor may be attributed to: (a) residuals from releases from the "High" and "Moderate" risk sites identified on and in the vicinity of the Corridor; and/or (b) natural background levels (metals);

- The subsurface soil samples collected from the Corridor did not exhibit hazardous waste characteristics; and,

- Groundwater was not encountered during the Corridor subsurface investigation.

Based on the results of the field investigation and laboratory analytical results, LiRo recommends the following:

- The Contract documents should identify provisions and a contingency for managing, handling, transporting and disposing of contaminated non-hazardous soil. The Contractor should be required to submit a Material Handling Plan, to identify the specific protocol and procedures that will be employed to manage the waste in accordance with applicable regulations;

- Due to the presence of PCBs, pesticides, and metals, dust control procedures are recommended during excavation activities to minimize the creation and dispersion of fugitive airborne dust. The Contractor should implement dust control measures to minimize potential of migrating fugitive airborne contaminants released as a direct result of construction. A Community Air Monitoring Plan (CAMP) shall be developed in accordance with NYSDEC Division of Environmental Remediation 10 (DER-10) Regulations. The CAMP requires real-time monitoring for VOCs and particulates (i.e., dust) at the downwind perimeter of each designated work area when certain activities are in progress at contaminated sites. The CAMP is intended to provide a measure of protection for the downwind community from potential airborne contaminant releases as a direct result of investigative and remedial work activities. Specific requirements shall be reviewed for each situation in consultation with NYSDOH to ensure proper applicability;

- Groundwater was not encountered during the Phase II SCI activities and, therefore, dewatering may not be required. However, should dewatering become necessary during construction activities within the Corridor, the contractor should be required to obtain New York City Department of Environmental Protection (NYCDEP) sewer discharge permit. If discharge into storm sewers or surface waters is required during dewatering, it may be done under the appropriate NYSDEC State Pollutant Discharge Elimination System (SPDES) permit. Additional sampling and laboratory analysis may be required to satisfy NYSDEC requirements prior to discharge into storm sewers or surface waters; and,

- Before beginning any excavation activity, the contractor shall submit a Corridor-specific health and safety plan (HASP) that will meet the requirements set forth by the Occupational, Safety and Health Administration (OSHA), the NYSDOH and any other applicable regulations. The HASP should identify the possible locations and risks associated with the potential contaminants that may be encountered, and the administrative and engineering controls that will be utilized to mitigate concerns (i.e., dust control procedures for PCBs, pesticides, and metals).

6.0 STATEMENT OF LIMITATIONS

The data presented and the opinions expressed in this report are qualified as stated in the attachment to this section of the report.

Report Prepared By:

Jon Williams
Senior Geologist

Report Reviewed By:

Stephen Frank
Senior Geologist

Report Reviewed By:

Robert Kreuzer
Project Manager

STATEMENT OF LIMITATIONS

The data presented and the opinions expressed in this report are qualified as follows:

The sole purpose of the investigation and of this report is to assess the physical characteristics of the Corridor with respect to the presence or absence in the environment of oil or hazardous materials and substances as defined in the applicable state and federal environmental laws and regulations and to gather information regarding current and past environmental conditions at the Corridor.

LiRo derived the data in this report primarily from visual inspections, examination of records in the public domain, interviews with individuals with information about the Corridor, and a limited number of subsurface explorations made on the dates indicated. The passage of time, manifestation of latent conditions or occurrence of future events may require further exploration at the Corridor, analysis of the data, and reevaluation of the findings, observations, and conclusions expressed in the report.

In preparing this report, LiRo has relied upon and presumed accurate certain information (or the absence thereof) about the Corridor and adjacent properties provided by governmental officials and agencies, the Client, and others identified herein. Except as otherwise stated in the report, LiRo has not attempted to verify the accuracy or completeness of any such information.

The data reported and the findings, observations, and conclusions expressed in the report are limited by the Scope of Services, including the extent of subsurface exploration and other tests. The Scope of Services was defined by the requests of the Client, the time and budgetary constraints imposed by the Client, and the availability of access to the Corridor.

Because of the limitations stated above, the findings, observations, and conclusions expressed by LiRo in this report are not, and should not be considered, an opinion concerning the compliance of any past or present owner or operator of the Corridor with any federal, state or local law or regulation. No warranty or guarantee, whether express or implied, is made with respect to the data reported or findings, observations, and conclusions expressed in this report. Further, such data, findings, observations, and conclusions are based solely upon Corridor conditions in existence at the time of investigation.

This report has been prepared on behalf of and for the exclusive use of the Client, and is subject to and issued in connection with the Agreement and the provisions thereof.

TABLES

TABLE 1 – SUMMARY OF ENVIRONMENTAL BORING DATA
TABLE 2 – SUMMARY OF TCL VOCs DETECTED IN SOIL
TABLE 3 – SUMMARY OF SVOCs DETECTED IN SOIL
TABLE 4 – SUMMARY OF TAL METALS DETECTED IN SOIL
TABLE 5 – SUMMARY OF PESTICIDES DETECTED IN SOIL
TABLE 6 – SUMMARY OF PCBs DETECTED IN SOIL
TABLE 7 –SUMMARY OF WASTE CHARACTERIZATION OF SOIL

Table 1. Summary of Environmental Boring Data

Boring No.	Sample ID	PID (ppm)	Sample Interval (ftbg)	Total VOCs (ug/kg)	Total SVOCs (ug/kg)	Metals Exceedances (Yes/No)[1]	Total Pesticides (ug/kg)	Total PCBs (ug/kg)	TCLP Metals/Waste Exceedances (Yes / No)[2]	Depth to Water (ftbg)	Total Depth (ftbg)	Other Comments
SB-01	SB-01-0-2	<1	0-2	3	577	No	28	ND	NA	NA	15.0	No petroleum odors, visual evidence or impact, or elevated PID readings were detected.
	SB-01-14.5-15		14.5-15	4	680	No	ND	ND	NA			
	SB-01-COMP		0-15	NA	NA	NA	NA	NA	No			
SB-02	SB-02-0-2	<1	0-2	3	1,810	Yes	4	ND	NA	NA	8.0	No petroleum odors, visual evidence or impact, or elevated PID readings were detected.
	SB-02-7.5-8		7.5-8	24	680	No	ND	ND	NA			
	SB-02-COMP		0-8	NA	NA	NA	NA	NA	No			
SB-03	SB-03-0-2	<1	0-2	3	524	Yes	36	150	NA	NA	10.0	No petroleum odors, visual evidence or impact, or elevated PID readings were detected.
	SB-03-9.5-10		9.5-10	16	220	No	ND	ND	NA			
	SB-03-COMP		0-10	NA	NA	NA	NA	NA	No			
SB-04	SB-04-0-2	<1	0-2	3	1,338	Yes	96	ND	NA	NA	15.0	No petroleum odors, visual evidence or impact, or elevated PID readings were detected.
	SB-04-14.5-15		14.5-15	19	340	No	ND	ND	NA			
	SB-04-COMP		0-15	NA	NA	NA	NA	NA	No			
SB-05	SB-05-0-2	<1	0-2	3	140	No	ND	ND	NA	NA	10.0	No petroleum odors, visual evidence or impact, or elevated PID readings were detected.
	SB-05-9.5-10		9.5-10	15	190	No	ND	ND	NA			
	SB-05-COMP		0-10	NA	NA	NA	NA	NA	No			
SB-06	SB-06-0-2	<1	0-2	2	90	No	3	ND	NA	NA	10.0	No petroleum odors, visual evidence or impact, or elevated PID readings were detected.
	SB-06-9.5-10		9.5-10	33	260	No	ND	ND	NA			
	SB-06-COMP		0-10	NA	NA	NA	NA	NA	No			
SB-07	SB-07-0-2	<1	0-2	3	1,109	Yes	7	28	NA	NA	13.0	No petroleum odors, visual evidence or impact, or elevated PID readings were detected.
	SB-07-12.5-13		12.5-13	16	240	No	ND	ND	NA			
	SB-07-COMP		0-13	NA	NA	NA	NA	NA	No			
SB-08	SB-08-0-2	<1	0-2	4	1,458	Yes	19	45	NA	NA	12.0	No petroleum odors, visual evidence or impact, or elevated PID readings were detected.
	SB-08-11.5-12		11.5-12	31	270	No	ND	ND	NA			
	SB-08-COMP		0-12	NA	NA	NA	NA	NA	No			
SB-09	SB-09-0-2	<1	0-2	4	1,637	Yes	3	14	NA	NA	31.0	No petroleum odors, visual evidence or impact, or elevated PID readings were detected.
	SB-09-30.5-31		30.5-31	4	440	No	ND	ND	NA			
	SB-09-DUP		30.5-31	3	533	No	ND	ND	NA			
	SB-09-COMP		0-31	NA	NA	NA	NA	NA	No			

Notes:
[1] Metal(s) exceeds Unrestricted Use (Track 1) SCOs and/or Restricted Residential or Commercial Use (Track 2) SCOs.
[2] Metal(s) exceeds 6 NYCRR Part 371 and RCRA.

Soil grab samples were analyzed for Target Compound List (TCL) Volatile Organic Compounds (VOCs), TCL Semi-Volatile Organic Compounds (SVOCs), Target Analyte List (TAL) Metals, Pesticides, and Polychlorinated Biphenyls (PCBs).
Soil Composite samples were analyzed for Total Petroleum Hydrocarbon (TPHC) Diesel Range Organics/Gasoline Range Organics (TPHC DRO/GRO), Resource Conservation and Recovery Act (RCRA) Characteristics, and/or Toxicity Characteristic Leaching Procedure (TCLP) RCRA Metals.
NA = Not Analyzed/Not Applicable
ND = Non detect
ftbg = feet below grade
ppm = parts per million
ug/kg = microgram per kilogram

Table 2. Summary of TCL VOCs Detected in Soil

TCL VOC	Part 375-6.8 (a) Unrestricted Use (Track 1) Soil Cleanup Objectives (SCOs)	Part 375-6.8 (b) Restricted Use (Track 2) Residential Soil Cleanup Objectives (SCOs)	Part 375-6.8 (b) Restricted Use (Track 2) Commercial Soil Cleanup Objectives (SCOs)	Sample ID, Date Collect, and Depth (ftbg)				
				SB-01-0-2	SB-01-14.5-15	SB-02-0-2	SB-02-7.5-8	SB-03-0-2
				7/12/2017	6/19/2017	7/12/2017	6/20/2017	7/12/2017
				0-2	14.5-15	0-2	7.5-8	0-2
Methylene chloride	50	51,000	500,000	2.7 J	4.2 J	2.6 J	24.4	3.4 J
Total VOCs	NS	NS	NS	3	4	3	24	3

Notes:
All concentrations are reported in parts per billion (ppb or ug/kg)
ftbg = feet below grade
NS = No Standard
ND = Compound not detected above method detection limit (see attached lab report for mdl's)
J = Compound detected below the quantitation limit
VOCs = Volatile Organic Compounds
TCL = Target Compound List
SCOs = Soil Cleanup Objectives as per the NYSDEC Regulations 6 NYCRR Subpart 375-6 Remedial Program Soil Cleanup Objectives (December 14, 2006).

Table 2. Summary of TCL VOCs Detected in Soil

TCL VOC	Part 375-6.8 (a) Unrestricted Use (Track 1) Soil Cleanup Objectives (SCOs)	Part 375-6.8 (b) Restricted Use (Track 2) Residential Soil Cleanup Objectives (SCOs)	Part 375-6.8 (b) Restricted Use (Track 2) Commercial Soil Cleanup Objectives (SCOs)	Sample ID, Date Collect, and Depth (ftbg)				
				SB-03-9.5-10	SB-04-0-2	SB-04-14.5-15	SB-05-0-2	SB-05-9.5-10
				6/20/2017	7/12/2017	6/20/2017	7/12/2017	6/20/2017
				9.5-10	0-2	14.5-15	0-2	9.5-10
Methylene chloride	50	51,000	500,000	15.6	3.3 J	19.1	3.1 J	14.7
Total VOCs	NS	NS	NS	16	3	19	3	15

Notes:
All concentrations are reported in parts per billion (ppb or ug/kg)
ftbg = feet below grade
NS = No Standard
ND = Compound not detected above method detection limit (see attached lab report for mdl
J = Compound detected below the quantitation limit
VOCs = Volatile Organic Compounds
TCL = Target Compound List
SCOs = Soil Cleanup Objectives as per the NYSDEC Regulations 6 NYCRR Subpart 375-6 Remedial Program Soil Cleanup Objectives (December 14, 2006).

Table 2. Summary of TCL VOCs Detected in Soil

TCL VOC	Part 375-6.8 (a) Unrestricted Use (Track 1) Soil Cleanup Objectives (SCOs)	Part 375-6.8 (b) Restricted Use (Track 2) Residential Soil Cleanup Objectives (SCOs)	Part 375-6.8 (b) Restricted Use (Track 2) Commercial Soil Cleanup Objectives (SCOs)	Sample ID, Date Collect, and Depth (ftbg)				
				SB-06-0-2	SB-06-9.5-10	SB-07-0-2	SB-07-12.5-13	SB-08-0-2
				7/12/2017	6/20/2017	7/12/2017	6/20/2017	7/12/2017
				0-2	9.5-10	0-2	12.5-13	0-2
Methylene chloride	50	51,000	500,000	2.3 J	32.9	3.3 J	16	3.7 J
Total VOCs	NS	NS	NS	2	33	3	16	4

Notes:
All concentrations are reported in parts per billion (ppb or ug/kg)
ftbg = feet below grade
NS = No Standard
ND = Compound not detected above method detection limit (see attached lab report for mdl
J = Compound detected below the quantitation limit
VOCs = Volatile Organic Compounds
TCL = Target Compound List
SCOs = Soil Cleanup Objectives as per the NYSDEC Regulations 6 NYCRR Subpart 375-6 Remedial Program Soil Cleanup Objectives (December 14, 2006).

Table 2. Summary of TCL VOCs Detected in Soil

TCL VOC	Part 375-6.8 (a) Unrestricted Use (Track 1) Soil Cleanup Objectives (SCOs)	Part 375-6.8 (b) Restricted Use (Track 2) Residential Soil Cleanup Objectives (SCOs)	Part 375-6.8 (b) Restricted Use (Track 2) Commercial Soil Cleanup Objectives (SCOs)	Sample ID, Date Collect, and Depth (ftbg)			
				SB-08-11.5-12	SB-09-0-2	SB-09-30.5-31	SB-09-30.5-31-DUP
				6/20/2017	7/12/2017	6/19/2017	6/19/2017
				11.5-12	0-2	30.5-31	30.5-31
Methylene chloride	50	51,000	500,000	31.1	4.2 J	3.8 J	3.3 J
Total VOCs	NS	NS	NS	31	4	4	3

Notes:
All concentrations are reported in parts per billion (ppb or ug/kg)
ftbg = feet below grade
NS = No Standard
ND = Compound not detected above method detection limit (see attached lab report for mdl
J = Compound detected below the quantitation limit
VOCs = Volatile Organic Compounds
TCL = Target Compound List
SCOs = Soil Cleanup Objectives as per the NYSDEC Regulations 6 NYCRR Subpart 375-6 Remedial Program Soil Cleanup Objectives (December 14, 2006).

Table 2. Summary of TCL VOCs Detected in Soil

TCL VOC	Part 375-6.8 (a) Unrestricted Use (Track 1) Soil Cleanup Objectives (SCOs)	Part 375-6.8 (b) Restricted Use (Track 2) Residential Soil Cleanup Objectives (SCOs)	Part 375-6.8 (b) Restricted Use (Track 2) Commercial Soil Cleanup Objectives (SCOs)	Sample ID, Date Collect, and Depth (ftbg)	
				TRIP-BLANK-1	TRIP-BLANK-2
				6/19/2017	6/20/2017
				NA	NA
Methylene chloride	50	51,000	500,000	ND	ND
Total VOCs	NS	NS	NS	ND	ND

Notes:
All concentrations are reported in parts per billion (ppb or ug/kg)
ftbg = feet below grade
NS = No Standard
ND = Compound not detected above method detection limit (see attached lab report for mdl
J = Compound detected below the quantitation limit
VOCs = Volatile Organic Compounds
TCL = Target Compound List
SCOs = Soil Cleanup Objectives as per the NYSDEC Regulations 6 NYCRR Subpart 375-6 Remedial Program Soil Cleanup Objectives (December 14, 2006).

Table 3. Summary of TCL SVOCs Detected in Soil

TCL SVOC	Part 375-6.8 (a) Unrestricted Use (Track 1) Soil Cleanup Objectives (SCOs)	Part 375-6.8 (b) Restricted Use (Track 2) Residential Soil Cleanup Objectives (SCOs)	Part 375-6.8 (b) Restricted Use (Track 2) Commercial Soil Cleanup Objectives (SCOs)	Sample ID, Date Collect, and Depth (ftbg)				
				SB-01-0-2	SB-01-14.5-15	SB-02-0-2	SB-02-7.5-8	SB-03-0-2
				7/12/2017	6/19/2017	7/12/2017	6/20/2017	7/12/2017
				0-2	14.5-15	0-2	7.5-8	0-2
Benzo(a)anthracene	1,000	1,000	5,600	ND	ND	110 J	ND	ND
Benzo(a)pyrene	1,000	1,000	1,000	ND	ND	140 J	ND	ND
Benzo(b)fluoranthene	1,000	1,000	5,600	86.4 J	ND	210 J	ND	ND
Benzo(g,h,i)perylene	100,000	100,000	500,000	ND	ND	97.2 J	ND	ND
bis(2-Ethylhexyl)phthalate	NS	NS	NS	ND	ND	83.9 J	ND	89.3 J
Butylbenzylphthalate	NS	NS	100,000	ND	ND	78.8 JQ	ND	ND
Chrysene	1,000	1,000	56,000	ND	ND	130 J	ND	ND
Dimethylphthalate	NS	NS	NS	180 J	580	250 J	220 J	200 J
Flouranthene	100,000	100,000	500,000	140 J	ND	230 J	ND	74.3 J
Indeno(1,2,3-cd)pyrene	500	500	5,600	ND	ND	210 J	ND	160 J
Phenanthrene	100,000	100,000	100,000	81.3 J	ND	99.7 J	ND	ND
Phenol	330	100,000	500,000	ND	100 J	ND	ND	ND
Pyrene	100,000	100,000	500,000	89.1 J	ND	170 J	ND	ND
Total SVOCs	NS	NS	NS	577	680	1,810	220	524

Notes:
All concentrations are reported in parts per billion (ppb or ug/kg)
ftbg = feet below grade
ND = Compound not detected above method detection limit (see attached lab report for mdl's)
NS = No Standard
NA = Not Analyzed
J = Compound detected below the quantitation limit
SVOCs = Semi Volatile Organic Compounds
TCL = Target Compound List
Q = LCS control criteria did not meet requirements
SCOs = Soil Cleanup Objectives as per the NYSDEC Regulations 6 NYCRR Subpart 375-6 Remedial Program Soil Cleanup Objectives (December 14, 2006).

Table 3. Summary of TCL SVOCs Detected in Soil

TCL SVOC	Part 375-6.8 (a) Unrestricted Use (Track 1) Soil Cleanup Objectives (SCOs)	Part 375-6.8 (b) Restricted Use (Track 2) Residential Soil Cleanup Objectives (SCOs)	Part 375-6.8 (b) Restricted Use (Track 2) Commercial Soil Cleanup Objectives (SCOs)	Sample ID, Date Collect, and Depth (ftbg)				
				SB-03-9.5-10	SB-04-0-2	SB-04-14.5-15	SB-05-0-2	SB-05-9.5-10
				6/20/2017	7/12/2017	6/20/2017	7/12/2017	6/20/2017
				9.5-10	0-2	14.5-15	0-2	9.5-10
Benzo(a)anthracene	1,000	1,000	5,600	ND	98.1 J	ND	ND	ND
Benzo(a)pyrene	1,000	1,000	1,000	ND	110 J	ND	ND	ND
Benzo(b)fluoranthene	1,000	1,000	5,600	ND	140 J	ND	ND	ND
Benzo(g,h,i)perylene	100,000	100,000	500,000	ND	ND	ND	ND	ND
bis(2-Ethylhexyl)phthalate	NS	NS	NS	ND	ND	ND	ND	ND
Butylbenzylphthalate	NS	NS	100,000	ND	ND	ND	ND	ND
Chrysene	1,000	1,000	56,000	ND	100 J	ND	ND	ND
Dimethylphthalate	NS	NS	NS	220 J	270 J	340	490	190 J
Flouranthene	100,000	100,000	500,000	ND	200 J	ND	ND	ND
Indeno(1,2,3-cd)pyrene	500	500	5,600	ND	190 J	ND	140 J	ND
Phenanthrene	100,000	100,000	100,000	ND	100 J	ND	ND	ND
Phenol	330	100,000	500,000	ND	ND	ND	ND	ND
Pyrene	100,000	100,000	500,000	ND	130 J	ND	ND	ND
Total SVOCs	NS	NS	NS	220	1,338	340	140	190

Notes:
All concentrations are reported in parts per billion (ppb or ug/kg)
ftbg = feet below grade
ND = Compound not detected above method detection limit (see attached lab report for mdl's)
NS = No Standard
NA = Not Analyzed
J = Compound detected below the quantitation limit
SVOCs = Semi Volatile Organic Compounds
TCL = Target Compound List
Q = LCS control criteria did not meet requirements
SCOs = Soil Cleanup Objectives as per the NYSDEC Regulations 6 NYCRR Subpart 375-6 Remedial Program Soil Cleanup Objectives (December 14, 2006).

Table 3. Summary of TCL SVOCs Detected in Soil

TCL SVOC	Part 375-6.8 (a) Unrestricted Use (Track 1) Soil Cleanup Objectives (SCOs)	Part 375-6.8 (b) Restricted Use (Track 2) Residential Soil Cleanup Objectives (SCOs)	Part 375-6.8 (b) Restricted Use (Track 2) Commercial Soil Cleanup Objectives (SCOs)	Sample ID, Date Collect, and Depth (ftbg)				
				SB-06-0-2	SB-06-9.5-10	SB-07-0-2	SB-07-12.5-13	SB-08-0-2
				7/12/2017	6/20/2017	7/12/2017	6/20/2017	7/12/2017
				0-2	9.5-10	0-2	12.5-13	0-2
Benzo(a)anthracene	1,000	1,000	5,600	ND	ND	ND	ND	ND
Benzo(a)pyrene	1,000	1,000	1,000	ND	ND	ND	ND	91.4 J
Benzo(b)fluoranthene	1,000	1,000	5,600	ND	ND	110 J	ND	130 J
Benzo(g,h,i)perylene	100,000	100,000	500,000	ND	ND	ND	ND	ND
bis(2-Ethylhexyl)phthalate	NS	NS	NS	89.6 J	ND	270 J	ND	94.1 J
Butylbenzylphthalate	NS	NS	100,000	ND	ND	ND	ND	98.8 JQ
Chrysene	1,000	1,000	56,000	ND	ND	ND	ND	81.3 J
Dimethylphthalate	NS	NS	NS	420	260 J	370	240 J	550
Flouranthene	100,000	100,000	500,000	ND	ND	120 J	ND	160 J
Indeno(1,2,3-cd)pyrene	500	500	5,600	ND	ND	160 J	ND	160 J
Phenanthrene	100,000	100,000	100,000	ND	ND	ND	ND	ND
Phenol	330	100,000	500,000	ND	ND	ND	ND	ND
Pyrene	100,000	100,000	500,000	ND	ND	79 J	ND	92.2 J
Total SVOCs	NS	NS	NS	90	260	1,109	240	1,458

Notes:
All concentrations are reported in parts per billion (ppb or ug/kg)
ftbg = feet below grade
ND = Compound not detected above method detection limit (see attached lab report for mdl's)
NS = No Standard
NA = Not Analyzed
J = Compound detected below the quantitation limit
SVOCs = Semi Volatile Organic Compounds
TCL = Target Compound List
Q = LCS control criteria did not meet requirements
SCOs = Soil Cleanup Objectives as per the NYSDEC Regulations 6 NYCRR Subpart 375-6 Remedial Program Soil Cleanup Objectives (December 14, 2006).

Table 3. Summary of TCL SVOCs Detected in Soil

TCL SVOC	Part 375-6.8 (a) Unrestricted Use (Track 1) Soil Cleanup Objectives (SCOs)	Part 375-6.8 (b) Restricted Use (Track 2) Residential Soil Cleanup Objectives (SCOs)	Part 375-6.8 (b) Restricted Use (Track 2) Commercial Soil Cleanup Objectives (SCOs)	Sample ID, Date Collect, and Depth (ftbg)			
				SB-08-11.5-12	SB-09-0-2	SB-09-30.5-31	SB-09-30.5-31-DUP
				6/20/2017	7/12/2017	6/19/2017	6/19/2017
				11.5-12	0-2	30.5-31	30.5-31
Benzo(a)anthracene	1,000	1,000	5,600	ND	120 J	ND	ND
Benzo(a)pyrene	1,000	1,000	1,000	ND	140 J	ND	ND
Benzo(b)fluoranthene	1,000	1,000	5,600	ND	180 J	ND	ND
Benzo(g,h,i)perylene	100,000	100,000	500,000	ND	76.6 J	ND	ND
bis(2-Ethylhexyl)phthalate	NS	NS	NS	ND	ND	ND	ND
Butylbenzylphthalate	NS	NS	100,000	ND	ND	ND	ND
Chrysene	1,000	1,000	56,000	ND	130 J	ND	ND
Dimethylphthalate	NS	NS	NS	270 J	430	440	440
Flouranthene	100,000	100,000	500,000	ND	230 J	ND	ND
Indeno(1,2,3-cd)pyrene	500	500	5,600	ND	180 J	ND	ND
Phenanthrene	100,000	100,000	100,000	ND	ND	ND	ND
Phenol	330	100,000	500,000	ND	ND	ND	92.6 J
Pyrene	100,000	100,000	500,000	ND	150 J	ND	ND
Total SVOCs	NS	NS	NS	270	1,637	440	533

Notes:
All concentrations are reported in parts per billion (ppb or ug/kg)
ftbg = feet below grade
ND = Compound not detected above method detection limit (see attached lab report for mdl's)
NS = No Standard
NA = Not Analyzed
J = Compound detected below the quantitation limit
SVOCs = Semi Volatile Organic Compounds
TCL = Target Compound List
Q = LCS control criteria did not meet requirements
SCOs = Soil Cleanup Objectives as per the NYSDEC Regulations 6 NYCRR Subpart 375-6 Remedial Program Soil Cleanup Objectives (December 14, 2006).

Table 4. Summary of TAL Metals Detected in Soil

Target Analyte List Metal	Part 375-6.8 (a) Unrestricted Use (Track 1) Soil Cleanup Objectives (SCOs)	Part 375-6.8 (b) Restricted Use (Track 2) Residential Soil Cleanup Objectives (SCOs)	Part 375-6.8 (b) Restricted Use (Track 2) Commercial Soil Cleanup Objectives (SCOs)	Sample ID, Date Collected, and Depth (ftbg)			
				SB-01-0-2	SB-01-14.5-15	SB-02-0-2	SB-02-7.5-8
				7/12/2017	6/19/2017	7/12/2017	6/20/2017
				0-2	14.5-15	0-2	7.5-8
Aluminum	NS	NS	NS	5,330	1,820	7,700	2,560
Arsenic	13	16	16	2.63	1.13	11.50	1.59
Barium	350	350	400	19.8	11.8	50.3	12.0
Beryllium	7.2	14	590	0.199 J	0.08 J	0.29 J	0.088 J
Cadmium	2.5	2.5	9.3	0.18 J	ND	*2.60*	ND
Calcium	NS	NS	NS	1,870	356	1,920	239
Chromium (total)	30	36	1,500	9.05	5.94	13.5	6.52
Cobalt	NS	NS	NS	4.35	2.76	4.81	4.18
Copper	50	270	270	8.66	7.42	28.2	8
Iron	NS	NS	NS	9,900	7,910	13,400	8,500
Lead	63	400	1,000	13.2	10.2 N	*98.8*	3.7
Magnesium	NS	NS	NS	1,390	587	1,610	897
Manganese	1,600	2,000	10,000	150	187	203	123
Mercury	0.180	0.810	2.8	0.064	ND	*0.613*	ND
Nickel	30	140	310	13.4	15.6	15.2	11.9
Potassium	NS	NS	NS	363	216	318	301
Selenium	3.9	36	1,500	3.43	2.69	*5.19*	2.9
Silver	2	36	NS	0.808	0.481	1.060	0.538
Sodium	NS	NS	NS	32.6 J	70 JN	314	73.1 J
Thallium	NS	NS	NS	0.256 J	ND	ND	ND
Vanadium	NS	NS	NS	12.8	5.66	19.2	7.59
Zinc	109	2,200	10,000	22.2	9.63	86.7	9.39 N

Notes:
All concentrations are in parts per million (ppm or mg/kg)
ftbg = feet below grade
ND = Compound not detected above method detection limit (see attached lab report for mdl's)
NS = No Standard
J = Estimated value
D = Diluted
N = Duplicate sample recovery not within control limits
TAL = Target Analyte List
SCOs = Soil Cleanup Objectives as per the NYSDEC Regulations 6 NYCRR Subpart 375-6 Remedial

Shading = Concentration exceeds Unrestricted Use (Track 1) Soil Cleanup Objectives
Italicized = Concentration exceeds Restricted Use (Track 2) Residential Soil Cleanup Objectives

Table 4. Summary of TAL Metals Detected in Soil

Target Analyte List Metal	Part 375-6.8 (a) Unrestricted Use (Track 1) Soil Cleanup Objectives (SCOs)	Part 375-6.8 (b) Restricted Use (Track 2) Residential Soil Cleanup Objectives (SCOs)	Part 375-6.8 (b) Restricted Use (Track 2) Commercial Soil Cleanup Objectives (SCOs)	Sample ID, Date Collected, and Depth (ftbg)			
				SB-03-0-2	SB-03-9.5-10	SB-04-0-2	SB-04-14.5-15
				7/12/2017	6/20/2017	7/12/2017	6/20/2017
				0-2	9.5-10	0-2	14.5-15
Aluminum	NS	NS	NS	7,840	3,280	7,580	2,480
Arsenic	13	16	16	7.39	1.03	10.10	1.33
Barium	350	350	400	46.1	12.3 N	51.8	22.9 N
Beryllium	7.2	14	590	0.316	0.136 J	0.388	0.115 J
Cadmium	2.5	2.5	9.3	0.595	ND	0.264 J	ND
Calcium	NS	NS	NS	1,690	215	414	507
Chromium (total)	30	36	1,500	16.4	9.26	11.6	6.6
Cobalt	NS	NS	NS	4.91	4.10	4.20	5.73
Copper	50	270	270	32.7	11.3	13.9	9.28
Iron	NS	NS	NS	15,400	10,300	12,900	11,600
Lead	63	400	1,000	113	4.17	68.2	4.74
Magnesium	NS	NS	NS	1,330	931	823	642
Manganese	1,600	2,000	10,000	233	120	273	382
Mercury	0.180	0.810	2.8	0.486	ND	*1.06 D*	ND
Nickel	30	140	310	22.2	15.1	11.6	18.1
Potassium	NS	NS	NS	244	399	196	364
Selenium	3.9	36	1,500	5.97	3.46	5.31	3.67
Silver	2	36	NS	1.220	0.655	1.110	0.766
Sodium	NS	NS	NS	147	50.1 J	265	160
Thallium	NS	NS	NS	ND	0.296 J	0.264 J	0.423 J
Vanadium	NS	NS	NS	22.1	9.36	15.1	12.1
Zinc	109	2,200	10,000	63.4	14.9 N	44.3	9.54 N

Notes:
All concentrations are in parts per million (ppm or mg/kg)
ftbg = feet below grade
ND = Compound not detected above method detection limit (see attached lab report for mdl's)
NS = No Standard
J = Estimated value
D = Diluted
N = Duplicate sample recovery not within control limits
TAL = Target Analyte List
SCOs = Soil Cleanup Objectives as per the NYSDEC Regulations 6 NYCRR Subpart 375-6 Remedial

Shading = Concentration exceeds Unrestricted Use (Track 1) Soil Cleanup Objectives
Italicized = Concentration exceeds Restricted Use (Track 2) Residential Soil Cleanup Objectives

Table 4. Summary of TAL Metals Detected in Soil

Target Analyte List Metal	Part 375-6.8 (a) Unrestricted Use (Track 1) Soil Cleanup Objectives (SCOs)	Part 375-6.8 (b) Restricted Use (Track 2) Residential Soil Cleanup Objectives (SCOs)	Part 375-6.8 (b) Restricted Use (Track 2) Commercial Soil Cleanup Objectives (SCOs)	Sample ID, Date Collected, and Depth (ftbg)			
				SB-05-0-2	SB-05-9.5-10	SB-06-0-2	SB-06-9.5-10
				7/12/2017	6/20/2017	7/12/2017	6/20/2017
				0-2	9.5-10	0-2	9.5-10
Aluminum	NS	NS	NS	2,490	2,000	3,810	1,750
Arsenic	13	16	16	1.31	1.06	2.29	1.82
Barium	350	350	400	18.9	14.9 N	20.8	11 N
Beryllium	7.2	14	590	0.15 J	0.072 J	0.174 J	0.091 J
Cadmium	2.5	2.5	9.3	0.07 J	ND	0.198 J	ND
Calcium	NS	NS	NS	562	428	771	297
Chromium (total)	30	36	1,500	6.34	4.98	9.22	6.11
Cobalt	NS	NS	NS	3.31	2.71	4.04	2.19
Copper	50	270	270	9.09	9.76	12.1	6.53
Iron	NS	NS	NS	9,870	6,120	10,200	6,530
Lead	63	400	1,000	12.3	2.54	40.8	3.34
Magnesium	NS	NS	NS	849	642	955	670
Manganese	1,600	2,000	10,000	178	99.6	155	52.5
Mercury	0.180	0.810	2.8	0.023	ND	0.060	ND
Nickel	30	140	310	16.2	10.5	14	9.87
Potassium	NS	NS	NS	247	390	259	376
Selenium	3.9	36	1,500	3.85	2.01	3.84	2.18
Silver	2	36	NS	1	0.405 J	1	0.393 J
Sodium	NS	NS	NS	36.1 J	59.8 J	132	28.3 J
Thallium	NS	NS	NS	0.253 J	ND	0.271 J	ND
Vanadium	NS	NS	NS	14.2	5.73	11.4	7.41
Zinc	109	2,200	10,000	29.1	7.52 N	33.4	7.84 N

Notes:
All concentrations are in parts per million (ppm or mg/kg)
ftbg = feet below grade
ND = Compound not detected above method detection limit (see attached lab report for mdl's)
NS = No Standard
J = Estimated value
D = Diluted
N = Duplicate sample recovery not within control limits
TAL = Target Analyte List
SCOs = Soil Cleanup Objectives as per the NYSDEC Regulations 6 NYCRR Subpart 375-6 Remedial

Shading = Concentration exceeds Unrestricted Use (Track 1) Soil Cleanup Objectives
Italicized = Concentration exceeds Restricted Use (Track 2) Residential Soil Cleanup Objectives

Table 4. Summary of TAL Metals Detected in Soil

Target Analyte List Metal	Part 375-6.8 (a) Unrestricted Use (Track 1) Soil Cleanup Objectives (SCOs)	Part 375-6.8 (b) Restricted Use (Track 2) Residential Soil Cleanup Objectives (SCOs)	Part 375-6.8 (b) Restricted Use (Track 2) Commercial Soil Cleanup Objectives (SCOs)	Sample ID, Date Collected, and Depth (ftbg)			
				SB-07-0-2	SB-07-12.5-13	SB-08-0-2	SB-08-11.5-12
				7/12/2017	6/20/2017	7/12/2017	6/20/2017
				0-2	12.5-13	0-2	11.5-12
Aluminum	NS	NS	NS	5,470	2,210	6,600	2,980
Arsenic	13	16	16	4.540	0.936	4.53	1.06
Barium	350	350	400	38.1	10.8 N	73.4	16.8 N
Beryllium	7.2	14	590	0.26 J	0.109 J	0.277	0.116 J
Cadmium	2.5	2.5	9.3	1	ND	0.7	ND
Calcium	NS	NS	NS	10,200	196	1,210	252
Chromium (total)	30	36	1,500	14.8	6.89	13	6.87
Cobalt	NS	NS	NS	3.95	2.51	3.71	3.59
Copper	50	270	270	32.1	7.77	24.6	6.1
Iron	NS	NS	NS	13,300	8,650	12,900	8,840
Lead	63	400	1,000	209	3.44	284	3
Magnesium	NS	NS	NS	6,060	666	1,280	778
Manganese	1,600	2,000	10,000	196	136	199	138
Mercury	0.180	0.810	2.8	0.218	ND	0.286	ND
Nickel	30	140	310	16.5	14.8	12.3	18.7
Potassium	NS	NS	NS	247	218	276	238
Selenium	3.9	36	1,500	4.13	2.87	4.89	2.85
Silver	2	36	NS	1.030	0.568	1.030	0.555
Sodium	NS	NS	NS	119	30.7 J	278	59.2 J
Thallium	NS	NS	NS	ND	0.24 J	0.309 J	0.271 J
Vanadium	NS	NS	NS	22	5.85	20.2	6.17
Zinc	109	2,200	10,000	176	8.65 N	130	10.8 N

Notes:
All concentrations are in parts per million (ppm or mg/kg)
ftbg = feet below grade
ND = Compound not detected above method detection limit (see attached lab report for mdl's)
NS = No Standard
J = Estimated value
D = Diluted
N = Duplicate sample recovery not within control limits
TAL = Target Analyte List
SCOs = Soil Cleanup Objectives as per the NYSDEC Regulations 6 NYCRR Subpart 375-6 Remedial

Shading = Concentration exceeds Unrestricted Use (Track 1) Soil Cleanup Objectives
Italicized = Concentration exceeds Restricted Use (Track 2) Residential Soil Cleanup Objectives

Table 4. Summary of TAL Metals Detected in Soil

Target Analyte List Metal	Part 375-6.8 (a) Unrestricted Use (Track 1) Soil Cleanup Objectives (SCOs)	Part 375-6.8 (b) Restricted Use (Track 2) Residential Soil Cleanup Objectives (SCOs)	Part 375-6.8 (b) Restricted Use (Track 2) Commercial Soil Cleanup Objectives (SCOs)	Sample ID, Date Collected, and Depth (ftbg)		
				SB-09-0-2	SB-09-30.5-31	SB-09-30.5-31-DUP
				7/12/2017	6/19/2017	6/19/2017
				0-2	30.5-31	30.5-31
Aluminum	NS	NS	NS	5,770	3,090	1,440
Arsenic	13	16	16	5.79	1.17	0.371 J
Barium	350	350	400	51.0	15.6	10.4
Beryllium	7.2	14	590	0.263 J	0.104 J	0.059 J
Cadmium	2.5	2.5	9.3	1	ND	ND
Calcium	NS	NS	NS	**18,300**	468	114
Chromium (total)	30	36	1,500	10.4	20.8	3.72
Cobalt	NS	NS	NS	3.89	3.19	1.06 J
Copper	50	270	270	26	13	2.91
Iron	NS	NS	NS	12,500	9,330	2,960
Lead	63	400	1,000	131	9.66 N	5.96 N
Magnesium	NS	NS	NS	10,600	1,020	571
Manganese	1,600	2,000	10,000	171	114	73.3
Mercury	0.180	0.810	2.8	0.134	ND	ND
Nickel	30	140	310	12.0	17.3	4.51
Potassium	NS	NS	NS	255	776	363
Selenium	3.9	36	1,500	2.78	3.34	1.02
Silver	2	36	NS	0.91	0.56	0.161 J
Sodium	NS	NS	NS	228	83.7 JN	49.8 JN
Thallium	NS	NS	NS	0.41 J	ND	ND
Vanadium	NS	NS	NS	17.30	7.29	4.06
Zinc	109	2,200	10,000	84.5	19.5	7.83

Notes:
All concentrations are in parts per million (ppm or mg/kg)
ftbg = feet below grade
ND = Compound not detected above method detection limit (see attached lab report for mdl's)
NS = No Standard
J = Estimated value
D = Diluted
N = Duplicate sample recovery not within control limits
TAL = Target Analyte List
SCOs = Soil Cleanup Objectives as per the NYSDEC Regulations 6 NYCRR Subpart 375-6 Remedial

Shading = Concentration exceeds Unrestricted Use (Track 1) Soil Cleanup Objectives
Italicized = Concentration exceeds Restricted Use (Track 2) Residential Soil Cleanup Objectives

Table 5. Summary of Pesticides Detected in Soil

Pesticides	Part 375-6.8 (a) Unrestricted Use (Track 1) Soil Cleanup Objectives (SCOs)	Part 375-6.8 (b) Restricted Use (Track 2) Residential Soil Cleanup Objectives (SCOs)	Part 375-6.8 (b) Restricted Use (Track 2) Commercial Soil Cleanup Objectives (SCOs)	Sample ID, Date Collected, and Depth (ftbg)				
				SB-01-0-2	SB-01-14.5-15	SB-02-0-2	SB-02-7.5-8	SB-03-0-2
				7/12/2017	6/19/2017	7/12/2017	6/20/2017	7/12/2017
				0-2	14.5-15	0-2	7.5-8	0-2
4,4'-DDD	3.3	2,600	92,000	1.3 JP	ND	ND	ND	ND
4,4'-DDE	3.3	1,800	62,000	3.3	ND	1.4 J	ND	4.2 P
4,4'-DDT	3.3	1,700	47,000	7.8	ND	2.4 P	ND	9 P
Chlordane (alpha)	94	910	24,000	10.8 P	ND	ND	ND	22.4 P
Gamma Chlordane	NS	NS	NS	5.2 P	ND	ND	ND	ND
Total Pesticides	NS	NS	NS	28	ND	4	ND	36

Notes:
All concentrations are reported in parts per billion (ppb or ug/kg)
ftbg = feet below grade
ND = Compound not detected above method detection limit (see attached lab report for mdl's)
NS = No Standard
D = Diluted
J = Estimated value
P = Indicates >25% difference for detected concentrations between the two GC columns
SCOs = Soil Cleanup Objectives as per the NYSDEC Regulations 6 NYCRR Subpart 375-6 Remedial Program Soil Cleanup Objectives (December 14, 2006).

Shading = Concentration exceeds Unrestricted Use (Track 1) Soil Cleanup Objectives

Table 5. Summary of Pesticides Detected in Soil

Pesticides	Part 375-6.8 (a) Unrestricted Use (Track 1) Soil Cleanup Objectives (SCOs)	Part 375-6.8 (b) Restricted Use (Track 2) Residential Soil Cleanup Objectives (SCOs)	Part 375-6.8 (b) Restricted Use (Track 2) Commercial Soil Cleanup Objectives (SCOs)	Sample ID, Date Collected, and Depth (ftbg)				
				SB-03-9.5-10	SB-04-0-2	SB-04-14.5-15	SB-05-0-2	SB-05-9.5-10
				6/20/2017	7/12/2017	6/20/2017	7/12/2017	6/20/2017
				9.5-10	0-2	14.5-15	0-2	9.5-10
4,4'-DDD	3.3	2,600	92,000	ND	ND	ND	ND	ND
4,4'-DDE	3.3	1,800	62,000	ND	1.1 J	ND	ND	ND
4,4'-DDT	3.3	1,700	47,000	ND	ND	ND	ND	ND
Chlordane (alpha)	94	910	24,000	ND	69.9 DP	ND	ND	ND
Gamma Chlordane	NS	NS	NS	ND	25 P	ND	ND	ND
Total Pesticides	NS	NS	NS	ND	96	ND	ND	ND

Notes:
All concentrations are reported in parts per billion (ppb or ug/kg)
ftbg = feet below grade
ND = Compound not detected above method detection limit (see attached lab report for mdl's)
NS = No Standard
D = Diluted
J = Estimated value
P = Indicates >25% difference for detected concentrations between the two GC columns
SCOs = Soil Cleanup Objectives as per the NYSDEC Regulations 6 NYCRR Subpart 375-6 Remedial Program Soil Cleanup Objectives (December 14, 2006).

Shading = Concentration exceeds Unrestricted Use (Track 1) Soil Cleanup Objectives

Table 5. Summary of Pesticides Detected in Soil

Pesticides	Part 375-6.8 (a) Unrestricted Use (Track 1) Soil Cleanup Objectives (SCOs)	Part 375-6.8 (b) Restricted Use (Track 2) Residential Soil Cleanup Objectives (SCOs)	Part 375-6.8 (b) Restricted Use (Track 2) Commercial Soil Cleanup Objectives (SCOs)	Sample ID, Date Collected, and Depth (ftbg)				
				SB-06-0-2	SB-06-9.5-10	SB-07-0-2	SB-07-12.5-13	SB-08-0-2
				7/12/2017	6/20/2017	7/12/2017	6/20/2017	7/12/2017
				0-2	9.5-10	0-2	12.5-13	0-2
4,4'-DDD	3.3	2,600	92,000	ND	ND	ND	ND	ND
4,4'-DDE	3.3	1,800	62,000	0.663 J	ND	1.8 J	ND	8.9
4,4'-DDT	3.3	1,700	47,000	0.923 JP	ND	8.5 P	ND	10.2
Chlordane (alpha)	94	910	24,000	1.3 JP	ND	1.3 JP	ND	ND
Gamma Chlordane	NS	NS	NS	ND	ND	ND	ND	ND
Total Pesticides	NS	NS	NS	3	ND	7	ND	19

Notes:
All concentrations are reported in parts per billion (ppb or ug/kg)
ftbg = feet below grade
ND = Compound not detected above method detection limit (see attached lab report for mdl's)
NS = No Standard
D = Diluted
J = Estimated value
P = Indicates >25% difference for detected concentrations between the two GC columns
SCOs = Soil Cleanup Objectives as per the NYSDEC Regulations 6 NYCRR Subpart 375-6 Remedial Program Soil Cleanup Objectives (December 14, 2006).

Shading = Concentration exceeds Unrestricted Use (Track 1) Soil Cleanup Objectives

Table 5. Summary of Pesticides Detected in Soil

Pesticides	Part 375-6.8 (a) Unrestricted Use (Track 1) Soil Cleanup Objectives (SCOs)	Part 375-6.8 (b) Restricted Use (Track 2) Residential Soil Cleanup Objectives (SCOs)	Part 375-6.8 (b) Restricted Use (Track 2) Commercial Soil Cleanup Objectives (SCOs)	Sample ID, Date Collected, and Depth (ftbg)			
				SB-08-11.5-12	SB-09-0-2	SB-09-30.5-31	SB-09-30.5-31-DUP
				6/20/2017	7/12/2017	6/19/2017	6/19/2017
				11.5-12	0-2	30.5-31	30.5-31
4,4'-DDD	3.3	2,600	92,000	ND	ND	ND	ND
4,4'-DDE	3.3	1,800	62,000	ND	1.0 J	ND	ND
4,4'-DDT	3.3	1,700	47,000	ND	1.7 JP	ND	ND
Chlordane (alpha)	94	910	24,000	ND	ND	ND	ND
Gamma Chlordane	NS	NS	NS	ND	ND	ND	ND
Total Pesticides	NS	NS	NS	ND	3	ND	ND

Notes:
All concentrations are reported in parts per billion (ppb or ug/kg)
ftbg = feet below grade
ND = Compound not detected above method detection limit (see attached lab report for mdl's)
NS = No Standard
D = Diluted
J = Estimated value
P = Indicates >25% difference for detected concentrations between the two GC columns
SCOs = Soil Cleanup Objectives as per the NYSDEC Regulations 6 NYCRR Subpart 375-6 Remedial Program Soil Cleanup Objectives (December 14, 2006).

Shading = Concentration exceeds Unrestricted Use (Track 1) Soil Cleanup Objectives

Table 6. Summary of PCBs Detected in Soil

PCBs	Part 375-6.8 (a) Unrestricted Use (Track 1) Soil Cleanup Objectives (SCOs)	Part 375-6.8 (b) Restricted Use (Track 2) Residential Soil Cleanup Objectives (SCOs)	Part 375-6.8 (b) Restricted Use (Track 2) Commercial Soil Cleanup Objectives (SCOs)	Sample ID, Date Collect, and Depth (ftbg)				
				SB-01-0-2	SB-01-14.5-15	SB-02-0-2	SB-02-7.5-8	SB-03-0-2
				7/12/2017	6/19/2017	7/12/2017	6/20/2017	7/12/2017
				0-2	14.5-15	0-2	7.5-8	0-2
Aroclor 1254	NS	NS	NS	ND	ND	ND	ND	150
Aroclor 1260	NS	NS	NS	ND	ND	ND	ND	ND
Total PCBs	100	1,000	1,000	ND	ND	ND	ND	150

Notes:
All concentrations are reported in parts per billion (ppb or ug/kg)
ftbg = feet below grade
ND = Compound not detected above method detection limit (see attached lab report for
NS = No Standard
PCBs = Polychlorinated Biphenyls
SCOs = Soil Cleanup Objectives as per the NYSDEC Regulations 6 NYCRR Subpart 375-6 Remedial Program Soil Cleanup Objectives (December 14, 2006).

Shading = Concentration exceeds Unrestricted Use (Track 1) Soil Cleanup Objectives

Table 6. Summary of PCBs Detected in Soil

PCBs	Part 375-6.8 (a) Unrestricted Use (Track 1) Soil Cleanup Objectives (SCOs)	Part 375-6.8 (b) Restricted Use (Track 2) Residential Soil Cleanup Objectives (SCOs)	Part 375-6.8 (b) Restricted Use (Track 2) Commercial Soil Cleanup Objectives (SCOs)	Sample ID, Date Collect, and Depth (ftbg)				
				SB-03-9.5-10	SB-04-0-2	SB-04-14.5-15	SB-05-0-2	SB-05-9.5-10
				6/20/2017	7/12/2017	6/20/2017	7/12/2017	6/20/2017
				9.5-10	0-2	14.5-15	0-2	9.5-10
Aroclor 1254	NS	NS	NS	ND	ND	ND	ND	ND
Aroclor 1260	NS	NS	NS	ND	ND	ND	ND	ND
Total PCBs	100	1,000	1,000	ND	ND	ND	ND	ND

Notes:
All concentrations are reported in parts per billion (ppb or ug/kg)
ftbg = feet below grade
ND = Compound not detected above method detection limit (see attached lab report for
NS = No Standard
PCBs = Polychlorinated Biphenyls
SCOs = Soil Cleanup Objectives as per the NYSDEC Regulations 6 NYCRR Subpart 375-6 Remedial Program Soil Cleanup Objectives (December 14, 2006).

Shading = Concentration exceeds Unrestricted Use (Track 1) Soil Cleanup Objectives

Table 6. Summary of PCBs Detected in Soil

PCBs	Part 375-6.8 (a) Unrestricted Use (Track 1) Soil Cleanup Objectives (SCOs)	Part 375-6.8 (b) Restricted Use (Track 2) Residential Soil Cleanup Objectives (SCOs)	Part 375-6.8 (b) Restricted Use (Track 2) Commercial Soil Cleanup Objectives (SCOs)	Sample ID, Date Collect, and Depth (ftbg)				
				SB-06-0-2	SB-06-9.5-10	SB-07-0-2	SB-07-12.5-13	SB-08-0-2
				7/12/2017	6/20/2017	7/12/2017	6/20/2017	7/12/2017
				0-2	9.5-10	0-2	12.5-13	0-2
Aroclor 1254	NS	NS	NS	ND	ND	ND	ND	ND
Aroclor 1260	NS	NS	NS	ND	ND	28.4 P	ND	45.2 P
Total PCBs	100	1,000	1,000	ND	ND	28	ND	45

Notes:
All concentrations are reported in parts per billion (ppb or ug/kg)
ftbg = feet below grade
ND = Compound not detected above method detection limit (see attached lab report for
NS = No Standard
PCBs = Polychlorinated Biphenyls
SCOs = Soil Cleanup Objectives as per the NYSDEC Regulations 6 NYCRR Subpart 375-6 Remedial Program Soil Cleanup Objectives (December 14, 2006).

Shading = Concentration exceeds Unrestricted Use (Track 1) Soil Cleanup Objectives

Table 6. Summary of PCBs Detected in Soil

PCBs	Part 375-6.8 (a) Unrestricted Use (Track 1) Soil Cleanup Objectives (SCOs)	Part 375-6.8 (b) Restricted Use (Track 2) Residential Soil Cleanup Objectives (SCOs)	Part 375-6.8 (b) Restricted Use (Track 2) Commercial Soil Cleanup Objectives (SCOs)	Sample ID, Date Collect, and Depth (ftbg)			
				SB-08-11.5-12	SB-09-0-2	SB-09-30.5-31	SB-09-30.5-31-DUP
				6/20/2017	7/12/2017	6/19/2017	6/19/2017
				11.5-12	0-2	30.5-31	30.5-31
Aroclor 1254	NS	NS	NS	ND	ND	ND	ND
Aroclor 1260	NS	NS	NS	ND	14.1 J	ND	ND
Total PCBs	100	1,000	1,000	ND	14	ND	ND

Notes:
All concentrations are reported in parts per billion (ppb or ug/kg)
ftbg = feet below grade
ND = Compound not detected above method detection limit (see attached lab report for
NS = No Standard
PCBs = Polychlorinated Biphenyls
SCOs = Soil Cleanup Objectives as per the NYSDEC Regulations 6 NYCRR Subpart 375-6 Remedial Program Soil Cleanup Objectives (December 14, 2006).

Shading = Concentration exceeds Unrestricted Use (Track 1) Soil Cleanup Objectives

Table 7. Summary of Waste Characterization of Soil

Parameter	6 NYCRR Part 371 and RCRA	Sample ID, Date Collect, and Depth (ftbg)				
		SB-01-COMP	SB-02-COMP	SB-03-COMP	SB-04-COMP	SB-05-COMP
		6/19/2017	6/20/2017	6/20/2017	6/20/2017	6/20/2017
		0-15	0-8	0-10	0-15	0-10
METALs[1]	**ug/L**					
Arsenic	5,000	ND	ND	ND	ND	ND
Barium	100,000	1,160	952	1,440	1,040	1,110
Cadmium	1,000	ND	ND	ND	ND	ND
Chromium	5,000	ND	12.7 J	ND	ND	ND
Lead	5,000	ND	ND	ND	ND	ND
Mercury	200	ND	ND	ND	ND	ND
Selenium	1,000	ND	ND	ND	ND	ND
Silver	5,000	ND	ND	ND	ND	ND
MISC. PARAMETERS (units)						
Reactivity Sulfide (mg/kg)	500	36.5	ND	26.9	ND	11.1
Reactivity Cyanide (mg/kg)	250	ND	ND	ND	ND	ND
pH (SU)	2-12.5	8.00	8.16	7.24	6.67	7.62
Ignitability	>140 °F	No	No	No	No	No
TPHC Diesel Range Organics (mg/kg)	NS	4.048	5.131	4.737	3.893	5.100
TPHC Gasoiline Range Organics (mg/kg)	NS	ND	ND	ND	ND	ND

Notes:
ftbg = feet below grade
NS = No Standard
ND = Compound not detected above method detection limit (see attached lab report for mdl's)
J = Estimated value
SU = Standard unit
mg/Kg = milligram per kilogram
ug/L = microgram per liter
°F = Degrees Fahrenheit
[1] = TCLP RCRA Metals

Table 7. Summary of Waste Characterization of Soil

Parameter	6 NYCRR Part 371 and RCRA	Sample ID, Date Collect, and Depth (ftbg)			
		SB-06-COMP	SB-07-COMP	SB-08-COMP	SB-09-COMP
		6/20/2017	6/20/2017	6/20/2017	6/19/2017
		0-10	0-13	0-12	0-31
METALs[1]	**ug/L**				
Arsenic	5,000	ND	ND	ND	ND
Barium	100,000	947	1,260	1,330	1,230
Cadmium	1,000	ND	ND	ND	BD
Chromium	5,000	ND	23.8 J	18.4 J	20.7 J
Lead	5,000	ND	ND	ND	ND
Mercury	200	ND	ND	ND	ND
Selenium	1,000	ND	ND	ND	ND
Silver	5,000	ND	ND	ND	ND
MISC. PARAMETERS (units)					
Reactivity Sulfide (mg/kg)	500	11.1	30.2	24	25.4
Reactivity Cyanide (mg/kg)	250	ND	ND	ND	ND
pH (SU)	2-12.5	7.8	7.53	8.30	8.9
Ignitability	>140 °F	No	No	No	No
TPHC Diesel Range Organics (mg/kg)	NS	4.759	3.768	3.795	5.001
TPHC Gasoiline Range Organics (mg/kg)	NS	ND	ND	ND	ND

Notes:
ftbg = feet below grade
NS = No Standard
ND = Compound not detected above method detection limit (see attached lab report for mdl's)
J = Estimated value
SU = Standard unit
mg/Kg = milligram per kilogram
ug/L = microgram per liter
°F = Degrees Fahrenheit
[1] = TCLP RCRA Metals

FIGURE 1 – TOPOGRAPHIC CORRIDOR LOCATION MAP

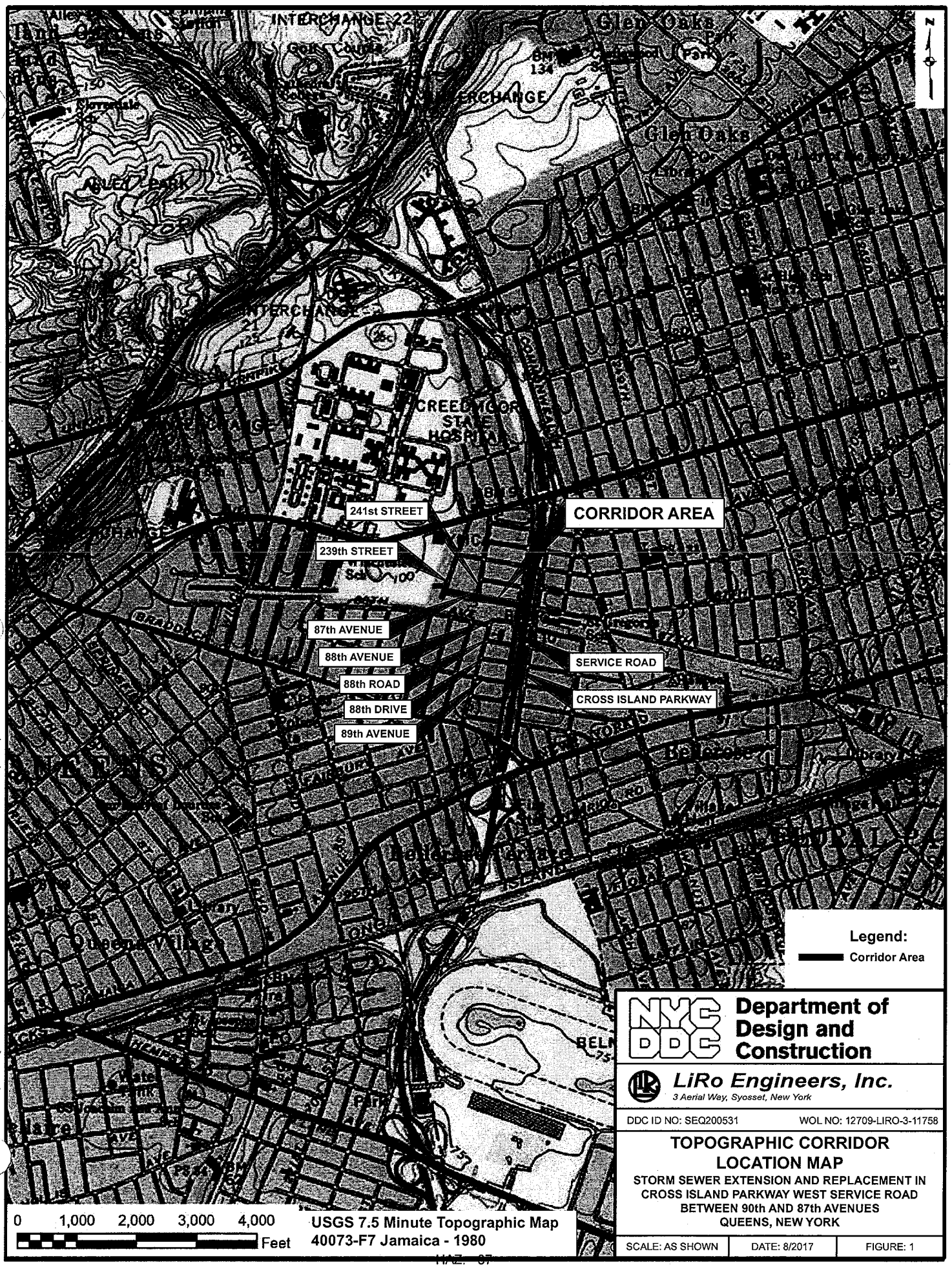

NYC DDC Department of Design and Construction

LiRo Engineers, Inc.
3 Aerial Way, Syosset, New York

DDC ID NO: SEQ200531 WOL NO: 12709-LIRO-3-11758

TOPOGRAPHIC CORRIDOR LOCATION MAP

STORM SEWER EXTENSION AND REPLACEMENT IN CROSS ISLAND PARKWAY WEST SERVICE ROAD BETWEEN 90th AND 87th AVENUES QUEENS, NEW YORK

SCALE: AS SHOWN	DATE: 8/2017	FIGURE: 1

J:\15-008-0265 2 /BEGS\Projects\Phase I - Phase II\12709 239th St. Ph II SC\CAD\239th Corridor Topo Map.ai

FIGURE 2 – SOIL BORING LOCATION MAP

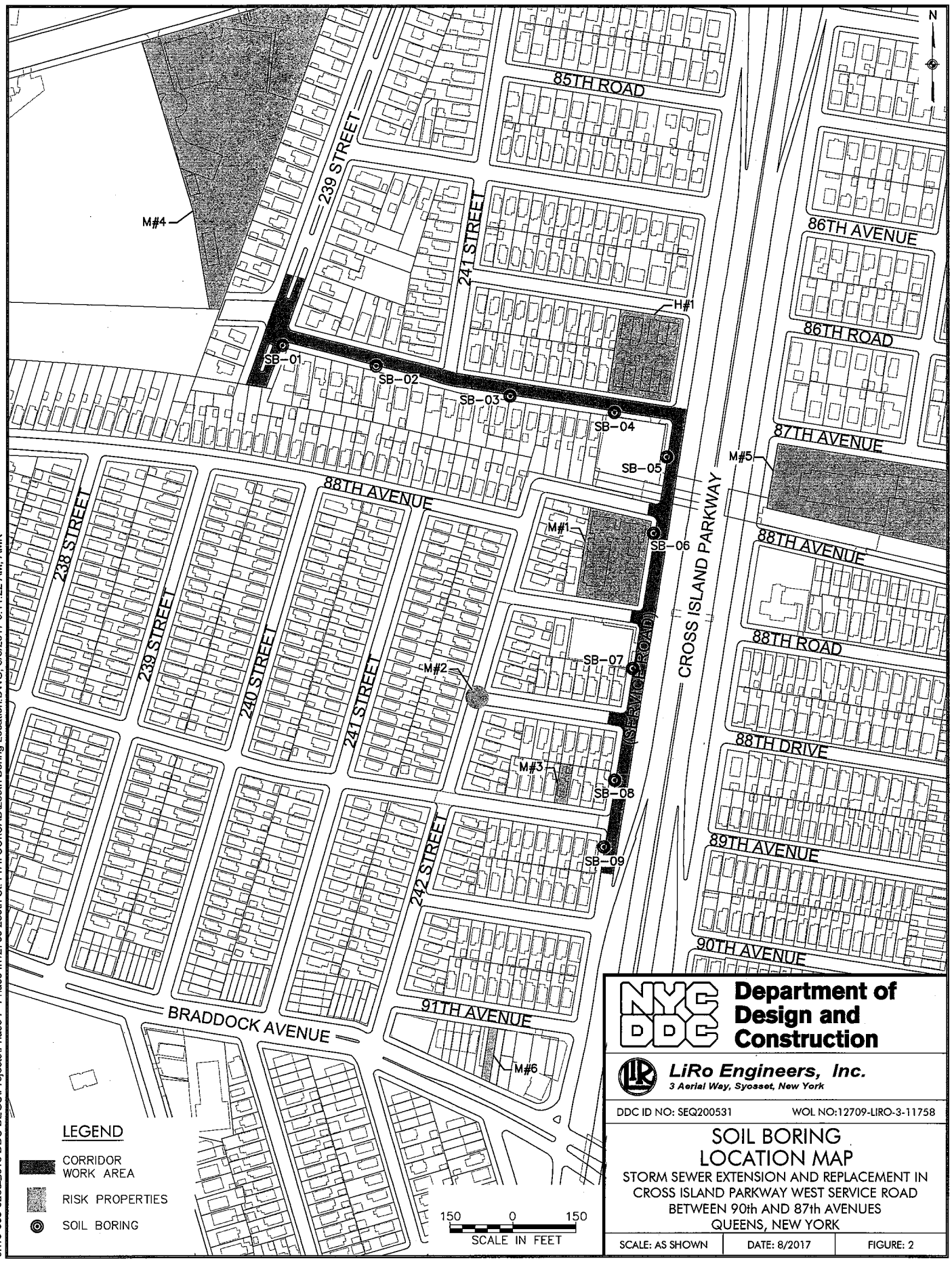

NYC DDC **Department of Design and Construction**

LiRo Engineers, Inc.
3 Aerial Way, Syosset, New York

DDC ID NO: SEQ200531 WOL NO:12709-LIRO-3-11758

SOIL BORING LOCATION MAP

STORM SEWER EXTENSION AND REPLACEMENT IN CROSS ISLAND PARKWAY WEST SERVICE ROAD BETWEEN 90th AND 87th AVENUES QUEENS, NEW YORK

SCALE: AS SHOWN	DATE: 8/2017	FIGURE: 2

J:\15-008-026__\15 DDC BEGS\Projects\Phase I - Phase II\12709 239th St. Ph II SC\CAD\239th Boring Location.DWG, 8/3/2017 9:11:22 AM, AMK

APPENDIX A
SOIL BORING LOCATION SKETCH

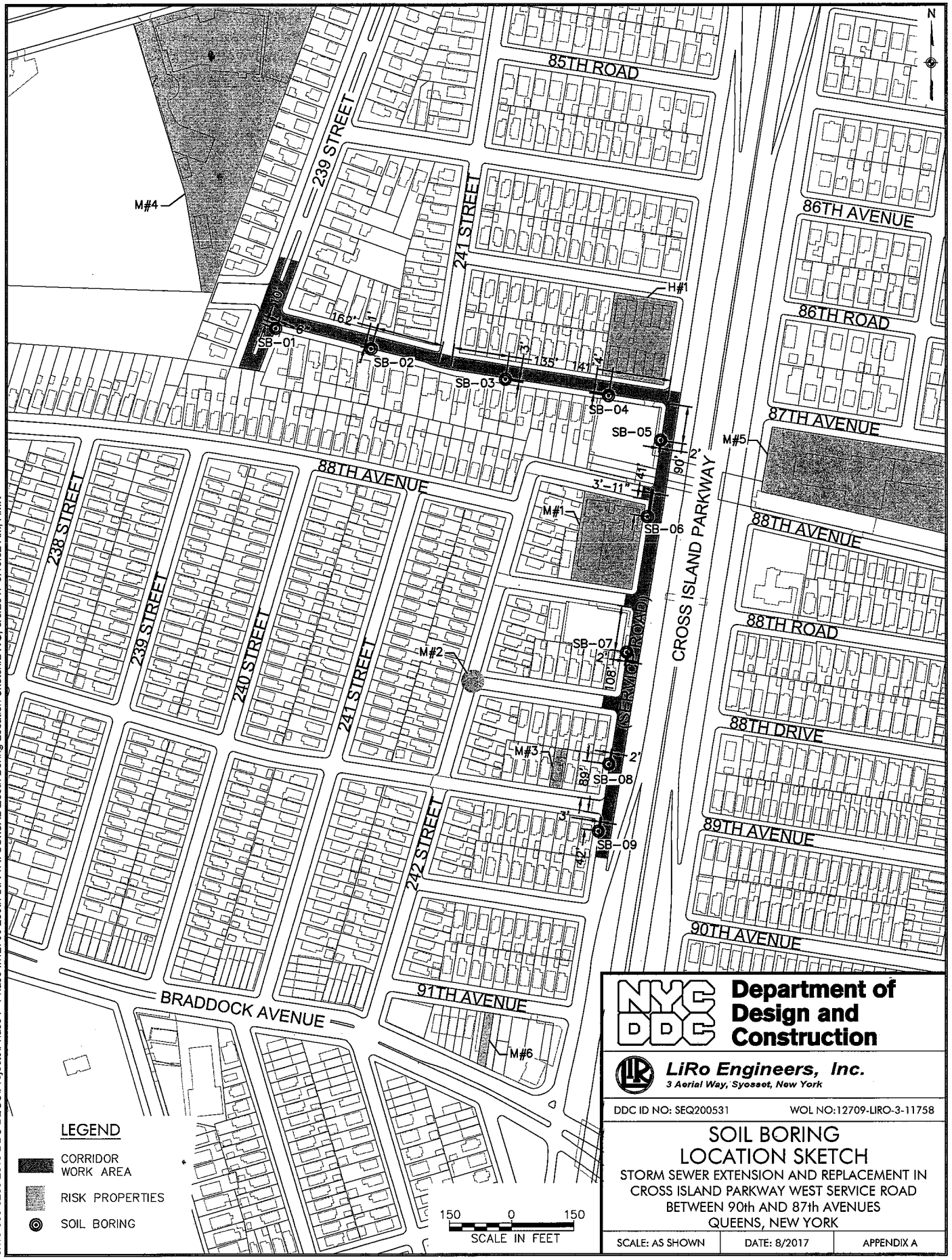

NYC DDC **Department of Design and Construction**

LiRo Engineers, Inc.
3 Aerial Way, Syosset, New York

DDC ID NO: SEQ200531 WOL NO:12709-LIRO-3-11758

SOIL BORING
LOCATION SKETCH
STORM SEWER EXTENSION AND REPLACEMENT IN
CROSS ISLAND PARKWAY WEST SERVICE ROAD
BETWEEN 90th AND 87th AVENUES
QUEENS, NEW YORK

SCALE: AS SHOWN	DATE: 8/2017	APPENDIX A

J:\15-008-026\...\5 DDC BEGS\Projects\Phase I - Phase II\12709 239th St. Ph II SC\CAD\239th Boring Location Sketch.DWG, 8/3/2017 9:10:52 AM, AMK

APPENDIX B
GEOLOGIC BORING LOGS

LiRo Engineers, Inc.

TEST BORING LOG

PROJECT:	Storm Sewer Extension & Replacement in Cross Island Parkway, Queens, NY	BORING NO:	SB-01
CLIENT:	Department of Design and Construction - OEGS - SEQ200531	SHEET:	1 of 1
BORING CONTRACTOR:	Aquifer Drilling & Testing, Inc.	JOB NO.:	15-008-0265
GROUNDWATER:	ND	LOCATION:	239th St
		GROUND ELEVATION:	NA
		DATE STARTED:	June 15, 2017
		DATE FINISHED:	June 19, 2017
		DRILLER:	Chris Iodice
		GEOLOGIST:	Eva Jakubowska
		REVIEWED BY:	

DATE	TIME	LEVEL	TYPE	TYPE	CAS.	SAMPLER	TUBE
						5'	
			NA	DIA.			
				WT.			
				FALL			

DEPTH FEET	STRATA	SAMPLE "S" NO.	SAMPLE "N" NO.	BLOWS PER 6"	REC% / RQD%	DESCRIPTION COLOR	DESCRIPTION CONSISTENCY HARDNESS	DESCRIPTION MATERIAL DESCRIPTION	USCS	REMARKS
1					NA	Light brown	NA	0-6': Fine to medium Sand with gravel.	SP	Hand cleared to 6 ftbg 0.0 ppm Moist
6										
					100%	Dark red-brown to yellow-brown	Medium loose	6-7.5': Medium to coarse Sand and gravel.		Moist 0.0 ppm
								7.5-8':Fine Sand.		
10								8-10':Medium to coarse Sand and gravel.		
					100%	Light brown	Medium loose	10-13': Fine to medium Sand, some gravel.		Moist 0.0 ppm
15								13-15': Medium to coarse Sand, trace of gravel.		
20								End of Boring at 15 ftbg.		
25										
30										

COMMENTS: Grab samples collected @ 0-2 and 14.5-15 ftbg for CEQR parameters.
Composite sample collected from 0-15 ftbg for waste characterization parameters.
Soil was classified according to the Unified Soil Classification System (USCS).

PROJECT NO.: 15-008-0265
BORING NO.: SB-01

LiRo Engineers, Inc.

TEST BORING LOG

PROJECT:	Storm Sewer Extension & Replacement in Cross Island Parkway, Queens, NY	BORING NO:	SB-02
CLIENT:	Department of Design and Construction - OEGS - SEQ200531	SHEET:	1 of 1
BORING CONTRACTOR:	Aquifer Drilling & Testing, Inc.	JOB NO.:	15-008-0265
GROUNDWATER:	ND	LOCATION:	87th Ave
		GROUND ELEVATION:	NA
		DATE STARTED:	June 15, 2017
		DATE FINISHED:	June 19, 2017
		DRILLER:	Chris Iodice
		GEOLOGIST:	Eva Jakubowska
		REVIEWED BY:	

DATE	TIME	LEVEL	TYPE	TYPE	CAS.	SAMPLER	TUBE
						5'	
			NA	DIA.			
				WT.			
				FALL			

DEPTH FEET	SAMPLE STRATA	"S" NO.	"N" NO.	BLOWS PER 6"	REC% RQD%	DESCRIPTION COLOR	CONSISTENCY HARDNESS	MATERIAL DESCRIPTION	USCS	REMARKS
1					NA	Light brown	NA	0-6': Fine to medium Sand with gravel.	SP	Hand cleared to 6 ftbg 0.0 ppm Moist
6										
8					80%	Red brown	Dense	6-8': Fine to medium Sand with gravel.		Moist 0.0 ppm
10								End of Boring at 8 ftbg.		
15										
20										
25										
30										

COMMENTS: Grab samples collected @ 0-2 and 7.5-8 ftbg for CEQR parameters.
Composite sample collected from 0-8 ftbg for waste characterization parameters.
Soil was classified according to the Unified Soil Classification System (USCS).

PROJECT NO.: 15-008-0265
BORING NO.: SB-02

LiRo Engineers, Inc.

TEST BORING LOG

		BORING NO:	SB-03
PROJECT:	Storm Sewer Extension & Replacement in Cross Island Parkway, Queens, NY	SHEET:	1 of 1
CLIENT:	Department of Design and Construction - OEGS - SEQ200531	JOB NO.:	15-008-0265
BORING CONTRACTOR:	Aquifer Drilling & Testing, Inc.	LOCATION:	87th Ave
GROUNDWATER:	ND	GROUND ELEVATION:	NA
		DATE STARTED:	June 15, 2017
		DATE FINISHED:	June 19, 2017
		DRILLER:	Chris Iodice
		GEOLOGIST:	Eva Jakubowska
		REVIEWED BY:	

DATE	TIME	LEVEL	TYPE	TYPE	CAS.	SAMPLER	TUBE
			NA	DIA.		5'	
				WT.			
				FALL			

DEPTH FEET	STRATA	SAMPLE "S" NO.	SAMPLE "N" NO.	BLOWS PER 6"	REC% RQD%	DESCRIPTION COLOR	CONSISTENCY HARDNESS	MATERIAL DESCRIPTION	USCS	REMARKS
1					NA	Dark brown to light brown	NA	0-6': Fine to medium Sand with gravel.	SP	Hand cleared to 6 ftbg 0.0 ppm Moist
6										
					85%	Reddish-brown	Dense	6-8': Fine to medium Sand with gravel.		Moist 0.0 ppm
10								8-10': Fine Sand, trace of silt and gravel.		
								End of Boring at 10 ftbg.		
20										
25										
30										

COMMENTS: Grab samples collected @ 0-2 and 9.5-10 ftbg for CEQR parameters.	PROJECT NO.: 15-008-0265
Composite sample collected from 0-10 ftbg for waste characterization parameters.	BORING NO.: SB-03
Soil was classified according to the Unified Soil Classification System (USCS).	

LiRo Engineers, Inc.

TEST BORING LOG

BORING NO:	SB-04
SHEET:	1 of 1
JOB NO.:	15-008-0265
LOCATION:	Cross Isl Pkwy W Service Rd
GROUND ELEVATION:	NA
DATE STARTED:	June 15, 2017
DATE FINISHED:	June 19, 2017
DRILLER:	Chris Iodice
GEOLOGIST:	Eva Jakubowska
REVIEWED BY:	

PROJECT: Storm Sewer Extension & Replacement in Cross Island Parkway, Queens, NY

CLIENT: Department of Design and Construction - OEGS - SEQ200531

BORING CONTRACTOR: Aquifer Drilling & Testing, Inc.

GROUNDWATER:					ND	CAS.	SAMPLER	TUBE
DATE	TIME	LEVEL	TYPE	TYPE			5'	
			NA	DIA.				
				WT.				
				FALL				

DEPTH FEET	STRATA	SAMPLE "S" NO.	SAMPLE "N" NO.	BLOWS PER 6"	REC% RQD%	COLOR	CONSISTENCY HARDNESS	MATERIAL DESCRIPTION	USCS	REMARKS
1					NA	Dark brown	NA	0-6': Fine Sand, gravel and tree roots.	SP	Hand cleared to 6 ftbg 0.0 ppm Moist
6					100%	Dark red-brown to light brown	Medium loose	6-10': Fine to medium Sand and gravel.		Moist 0.0 ppm
10					100%	Brown	Medium loose	10-15': Medium to coarse Sand and gravel.		Moist 0.0 ppm
15								End of Boring at 15 ftbg.		
20										
25										
30										

COMMENTS: Grab samples collected @ 0-2 and 14.5-15 ftbg for CEQR parameters.
Composite sample collected from 0-15 ftbg for waste characterization parameters.
Soil was classified according to the Unified Soil Classification System (USCS).

PROJECT NO.: 15-008-0265
BORING NO.: SB-04

LiRo Engineers, Inc.

TEST BORING LOG

PROJECT:	Storm Sewer Extension & Replacement in Cross Island Parkway, Queens, NY	BORING NO:	SB-05
CLIENT:	Department of Design and Construction - OEGS - SEQ200531	SHEET:	1 of 1
BORING CONTRACTOR:	Aquifer Drilling & Testing, Inc.	JOB NO.:	15-008-0265
GROUNDWATER:	ND	LOCATION:	Cross Isl Pkwy W Service Rd
		GROUND ELEVATION:	NA
		DATE STARTED:	June 15, 2017
		DATE FINISHED:	June 20, 2017
		DRILLER:	Chris Iodice
		GEOLOGIST:	Eva Jakubowska
		REVIEWED BY:	

DATE	TIME	LEVEL	TYPE	TYPE	CAS.	SAMPLER	TUBE
			NA	DIA.		5'	
				WT.			
				FALL			

DEPTH FEET	STRATA	SAMPLE "S" NO.	SAMPLE "N" NO.	BLOWS PER 6"	REC% RQD%	DESCRIPTION COLOR	CONSISTENCY HARDNESS	MATERIAL DESCRIPTION	USCS	REMARKS
1					NA	Dark brown	NA	0-6': Medium to coarse Sand with gravel.	SP	Hand cleared to 6 ftbg 0.0 ppm Moist
6					50%	Brown to light brown	Loose	6-10': Medium to coarse Sand with gravel.		Moist 0.0 ppm
10								End of Boring at 10 ftbg.		
20										
25										
30										

COMMENTS: Grab samples collected @ 0-2 and 9.5-10 ftbg for CEQR parameters.
Composite sample collected from 0-10 ftbg for waste characterization parameters.
Soil was classified according to the Unified Soil Classification System (USCS).

PROJECT NO.: 15-008-0265
BORING NO.: SB-05

LiRo Engineers, Inc.

TEST BORING LOG

BORING NO:	SB-06
SHEET:	1 of 1
JOB NO.:	15-008-0265
LOCATION:	Cross Isl Pkwy W Service Rd
GROUND ELEVATION:	NA
DATE STARTED:	June 16, 2017
DATE FINISHED:	June 20, 2017
DRILLER:	Chris Iodice
GEOLOGIST:	Eva Jakubowska
REVIEWED BY:	

PROJECT: Storm Sewer Extension & Replacement in Cross Island Parkway, Queens, NY

CLIENT: Department of Design and Construction - OEGS - SEQ200531

BORING CONTRACTOR: Aquifer Drilling & Testing, Inc.

GROUNDWATER:			ND		CAS.	SAMPLER	TUBE
DATE	TIME	LEVEL	TYPE	TYPE		5'	
			NA	DIA.			
				WT.			
				FALL			

DEPTH FEET	STRATA	SAMPLE "S" NO.	SAMPLE "N" NO.	BLOWS PER 6"	REC% RQD%	DESCRIPTION COLOR	CONSISTENCY HARDNESS	MATERIAL DESCRIPTION	USCS	REMARKS
1					NA	Red-brown	NA	0-6': Fine to medium Sand with gravel.	SP	Hand cleared to 6 ftbg 0.0 ppm Moist
6					50%	Light brown to beige	Loose	6-10': Fine to medium Sand, some gravel.		Moist 0.0 ppm
10								End of Boring at 10 ftbg.		
20										
25										
30										

COMMENTS: Grab samples collected @ 0-2 and 9.5-10 ftbg for CEQR parameters.
Composite sample collected from 0-10 ftbg for waste characterization parameters.
Soil was classified according to the Unified Soil Classification System (USCS).

PROJECT NO.: 15-008-0265
BORING NO.: SB-06

LiRo Engineers, Inc.

TEST BORING LOG

PROJECT:	Storm Sewer Extension & Replacement in Cross Island Parkway, Queens, NY	BORING NO:	SB-07
CLIENT:	Department of Design and Construction - OEGS - SEQ200531	SHEET:	1 of 1
BORING CONTRACTOR:	Aquifer Drilling & Testing, Inc.	JOB NO.:	15-008-0265
GROUNDWATER:	ND	LOCATION:	Cross Isl Pkwy W Service Rd
		GROUND ELEVATION:	NA
		DATE STARTED:	June 16, 2017
		DATE FINISHED:	June 20, 2017
		DRILLER:	Chris Iodice
		GEOLOGIST:	Eva Jakubowska
		REVIEWED BY:	

DATE	TIME	LEVEL	TYPE	TYPE	CAS.	SAMPLER	TUBE
			NA	DIA.		5'	
				WT.			
				FALL			

DEPTH FEET	STRATA	SAMPLE "S" NO.	SAMPLE "N" NO.	BLOWS PER 6"	REC% RQD%	DESCRIPTION COLOR	CONSISTENCY HARDNESS	MATERIAL DESCRIPTION	USCS	REMARKS
1					NA	Orange Brown to beige	NA	0-6': Fine Sand, trace clay and gravel.	SP	Hand cleared to 6 ftbg 0.0 ppm Moist
6					90%	Orange-brown	Medium loose	6-10': Fine to medium Sand and gravel.		Moist 0.0 ppm
10					70%	Dark orange brown	Medium loose	10-13': Medium to coarse Sand, some gravel.		Moist 0.0 ppm
13										
15								End of Boring at 13 ftbg.		
20										
25										
30										

COMMENTS: Grab samples collected @ 0-2 and 12.5-13 ftbg for CEQR parameters.
Composite sample collected from 0-13 ftbg for waste characterization parameters.
Soil was classified according to the Unified Soil Classification System (USCS).

PROJECT NO.: 15-008-0265
BORING NO.: SB-07

LiRo Engineers, Inc.

TEST BORING LOG

PROJECT:	Storm Sewer Extension & Replacement in Cross Island Parkway, Queens, NY	BORING NO:	SB-08
CLIENT:	Department of Design and Construction - OEGS - SEQ200531	SHEET:	1 of 1
BORING CONTRACTOR:	Aquifer Drilling & Testing, Inc.	JOB NO.:	15-008-0265
GROUNDWATER:	ND	LOCATION:	Cross Isl Pkwy W Service Rd
		GROUND ELEVATION:	NA
		DATE STARTED:	June 16, 2017
		DATE FINISHED:	June 20, 2017
		DRILLER:	Chris Iodice
		GEOLOGIST:	Eva Jakubowska
		REVIEWED BY:	

DATE	TIME	LEVEL	TYPE	TYPE	CAS.	SAMPLER	TUBE
						5'	
			NA	DIA.			
				WT.			
				FALL			

DEPTH FEET	STRATA	SAMPLE "S" NO.	SAMPLE "N" NO.	BLOWS PER 6"	REC% RQD%	COLOR	CONSISTENCY HARDNESS	MATERIAL DESCRIPTION	USCS	REMARKS
1					NA	Brown	NA	0-6': Fine Sand and gravel.	SP	Hand cleared to 6 ftbg 0.0 ppm Moist
6										
					70%	Very light brown	Medium loose	6-10': Fine to medium Sand and gravel.		Moist 0.0 ppm
10										
12					80%	Light brown	Medium loose	10-12': Medium to coarse Sand and gravel.		Moist 0.0 ppm
15								End of Boring at 12 ftbg.		
20										
25										
30										

COMMENTS: Grab samples collected @ 0-2 and 11.5-12 ftbg for CEQR parameters.
Composite sample collected from 0-12 ftbg for waste characterization parameters.
Soil was classified according to the Unified Soil Classification System (USCS).

PROJECT NO.: 15-008-0265
BORING NO.: SB-08

LiRo Engineers, Inc.

TEST BORING LOG

PROJECT:	Storm Sewer Extension & Replacement in Cross Island Parkway, Queens, NY	BORING NO:	SB-09
CLIENT:	Department of Design and Construction - OEGS - SEQ200531	SHEET:	1 of 1
BORING CONTRACTOR:	Aquifer Drilling & Testing, Inc.	JOB NO.:	15-008-0265
GROUNDWATER:	ND	LOCATION:	Cross Isl Pkwy W Service Rd
		GROUND ELEVATION:	NA
		DATE STARTED:	June 16, 2017
		DATE FINISHED:	June 19, 2017
		DRILLER:	Chris Iodice
		GEOLOGIST:	Eva Jakubowska
		REVIEWED BY:	

DATE	TIME	LEVEL	TYPE	TYPE	CAS.	SAMPLER	TUBE
						5'	
			NA	DIA.			
				WT.			
				FALL			

DEPTH FEET	STRATA	SAMPLE "S" NO.	"N" NO.	BLOWS PER 6"	REC% RQD%	DESCRIPTION COLOR	CONSISTENCY HARDNESS	MATERIAL DESCRIPTION	USCS	REMARKS
1					NA	Brown	NA	0-6': Fine to medium Sand and gravel.	SP	Hand cleared to 6 ftbg Moist 0.0 ppm
6					90%	Yellow brown	Medium loose	6-10': Fine to medium Sand, some gravel.		Moist 0.0 ppm
10					80%	Very light brown	Loose	10-13': Fine to medium Sand. 13-15': Medium Sand, trace of gravel.		Moist 0.0 ppm
15					95%	Yellow brown	Loose	15-20': Fine to medium Sand and gravel.		Moist 0.0 ppm
20					90%	Yellow brown	Medium loose	20-25': Medium to coarse Sand, some gravel.		Moist 0.0 ppm
25					90%	Light Brown	Medium loose	25-30': Fine to medium Sand, some gravel.		Moist 0.0 ppm
30					10%	Light Brown	Loose	30-31': Fine to medium Sand, some gravel.		Moist, 0.0 ppm
31								End of Boring at 31 ftbg		

COMMENTS: Grab samples collected @ 0-2 and 30.5-31 ftbg for CEQR parameters.	PROJECT NO.: 15-008-0265
Composite sample collected from 0-31 ftbg for waste characterization parameters.	BORING NO.: SB-09
Soil was classified according to the Unified Soil Classification System (USCS).	

APPENDIX C
LABORATORY ANALYTICAL RESULTS

Included on Attached CD

CHEMTECH 284 Sheffield Street, Mountainside, NJ 07092 Phone: 908 789 8900 Fax: 908 789 8922

DATA FOR

VOLATILE ORGANICS

SEMI-VOLATILE ORGANICS

GC SEMI-VOLATILES

METALS

GENERAL CHEMISTRY

PROJECT NAME : DDC OEGS - CROSS ISLAND PKWY STORM EXTENSION

LIRO ENGINEERS, INC.

690 Delaware Ave.

Buffalo, NY - 14209

Phone No: 716-882-5476

ORDER ID : I3781

ATTENTION : Jon Williams

ACCREDITED IN ACCORDANCE WITH nelac

DoD ELAP

CHEMTECH 284 Sheffield Street, Mountainside, NJ 07092 Phone: 908 789 8900 Fax: 908 789 8922

Date : 06/26/2017

Dear Jon Williams,

1 water and **7** soil samples for the **DDC OEGS - Cross Island Pkwy Storm Extension** project were received on **06/19/2017.** The analytical fax results for those samples requested for an expedited turn around time may be seen in this report. Please contact me if you have any questions or concerns

The invoice for this workorder is also attached to the e-mail.

Regards,

Loreana Davi

Loreana@chemtech.net

CHEMTECH

CHAIN OF CUSTODY RECORD

284 Sheffield Street, Mountainside, NJ 07092
(908) 789-8900 Fax (908) 789-8922
www.chemtech.net

CHEMTECH PROJECT NO. I3781
QUOTE NO.
COC Number 041661

CLIENT INFORMATION

REPORT TO BE SENT TO:
COMPANY: LiRO Engineers, Inc.
ADDRESS: 703 Gorimer Street
CITY: Brooklyn STATE: NY ZIP: 11211
ATTENTION: Jon Williams
PHONE: 716 882 5476 FAX: —

CLIENT PROJECT INFORMATION

PROJECT NAME: Cross Island Parkway Storm extension & water main
PROJECT NO.: 15-008-0265 LOCATION: Queens, NY
PROJECT MANAGER: Jon Williams
e-mail: williamsj@lirio.com
PHONE: 716 882 5476 FAX: —

CLIENT BILLING INFORMATION

BILL TO: PO#:
ADDRESS: same
CITY: STATE: ZIP:
ATTENTION: PHONE:

DATA TURNAROUND INFORMATION

FAX: DAYS *
HARD COPY: DAYS *
EDD: 5 days DAYS *
PREAPPROVED TAT: ☑ YES ☐ NO
* STANDARD TURNAROUND TIME IS 10 BUSINESS DAYS

DATA DELIVERABLE INFORMATION

☑ LEVEL 1: Results only ☐ Others
☐ LEVEL 2: Results + QC
☐ LEVEL 3: Results (plus results raw data) + QC
☐ LEVEL 4: Results + QC (all raw data)
☐ EDD Format:

ANALYSIS

1 TCL VOCs, 2 SVOCs, 3 PCBs, Pesticides, 4 TAL metals, 5 PAHs, 6 TCL PCBs, 7 TPHC DRO/GRO, 8 TCLP RCRA metals, 9

CHEMTECH SAMPLE ID	PROJECT SAMPLE IDENTIFICATION	SAMPLE MATRIX	SAMPLE TYPE COMP	SAMPLE TYPE GRAB	SAMPLE COLLECTION DATE	SAMPLE COLLECTION TIME	# OF BOTTLES	PRESERVATIVES E 1	2	3	4	5	6	7	8	9	COMMENTS (← Specify Preservatives A–HCl B–HNO3 C–H2SO4 D–NaOH E–ICE F–Other)
1.	SB-09-30.5-31.0'	soil		X	6/19/17	0830	2	X	X	X	X						1x4oz / 1x8 oz.
2.	SB-09-30.5-31.0 DUP	soil		X	↓	0830	2	X	X	X	X						" "
3.	SB-09-comp	soil	X			0835	3					X	X	X	X		1x4oz. / 2x8oz.
4.	SB-01-14.5-15.0'	soil		X		0950	2	X	X	X	X						1x4oz / 1x8oz
5.	SB-01-comp	soil	X			0955	3					X	X	X	X		1x4oz / 2x8oz
6.	Trip Blank # 1	DI water		X	—	—	2	X									2 x vials
7.																	
8.																	
9.																	
10.																	

SAMPLE CUSTODY MUST BE DOCUMENTED BELOW EACH TIME SAMPLES CHANGE POSSESSION INCLUDING COURIER DELIVERY

RELINQUISHED BY SAMPLER:	DATE/TIME: 6/19/17 10:00 AM	RECEIVED BY: 1.
RELINQUISHED BY: 1.	DATE/TIME:	RECEIVED BY: 2.
RELINQUISHED BY: 3.	DATE/TIME: 6-19-17 1530	RECEIVED FOR LAB BY: 3.

Conditions of bottles or coolers at receipt: ☐ Compliant ☐ Non Compliant
MeOH extraction requires an additional 4 oz jar for percent solid.
Comments:

Cooler Temp. 5.11 C
Ice in Cooler?: Yes

Page ___ of ___

SHIPPED VIA: CLIENT: ☐ HAND DELIVERED ☐ OVERNIGHT
CHEMTECH: ☑ PICKED UP ☐ OVERNIGHT

Shipment Complete: ☐ YES ☐ NO

Revision 8/2007

WHITE - CHEMTECH COPY FOR RETURN TO CLIENT YELLOW - CHEMTECH COPY PINK - SAMPLER COPY

CHEMTECH 284 Sheffield Street, Mountainside, NJ 07092 Phone: 908 789 8900 Fax: 908 789 8922

Report of Analysis

Client:	LiRo Engineers, Inc.	Date Collected:	06/19/17
Project:	DDC OEGS - Cross Island Pkwy Storm Extension	Date Received:	06/19/17
Client Sample ID:	SB-09-30.5-31.0	SDG No.:	I3781
Lab Sample ID:	I3781-01	Matrix:	SOIL
Level (low/med):	low	% Solid:	92.8

Cas	Parameter	Conc.	Qua.	DF	MDL	LOD	LOQ / CRQL	Units(Dry Weight)	Prep Date	Date Ana.	Ana Met.
7429-90-5	Aluminum	3090		1	0.77	1.15	4.59	mg/Kg	06/20/17 09:32	06/21/17 16:53	SW6010
7440-36-0	Antimony	0.573	UN	1	0.514	0.573	2.29	mg/Kg	06/20/17 09:32	06/21/17 16:53	SW6010
7440-38-2	Arsenic	1.17		1	0.229	0.229	0.917	mg/Kg	06/20/17 09:32	06/21/17 16:53	SW6010
7440-39-3	Barium	15.6		1	0.367	1.15	4.59	mg/Kg	06/20/17 09:32	06/21/17 16:53	SW6010
7440-41-7	Beryllium	0.104	J	1	0.055	0.069	0.275	mg/Kg	06/20/17 09:32	06/21/17 16:53	SW6010
7440-43-9	Cadmium	0.069	U	1	0.055	0.069	0.275	mg/Kg	06/20/17 09:32	06/21/17 16:53	SW6010
7440-70-2	Calcium	468		1	0.981	22.9	91.7	mg/Kg	06/20/17 09:32	06/21/17 16:53	SW6010
7440-47-3	Chromium	20.8		1	0.115	0.115	0.459	mg/Kg	06/20/17 09:32	06/21/17 16:53	SW6010
7440-48-4	Cobalt	3.19		1	0.344	0.344	1.38	mg/Kg	06/20/17 09:32	06/21/17 16:53	SW6010
7440-50-8	Copper	13		1	0.229	0.229	0.917	mg/Kg	06/20/17 09:32	06/21/17 16:53	SW6010
7439-89-6	Iron	9330		1	1.15	1.15	4.59	mg/Kg	06/20/17 09:32	06/21/17 16:53	SW6010
7439-92-1	Lead	9.66	N	1	0.11	0.229	0.55	mg/Kg	06/20/17 09:32	06/21/17 16:53	SW6010
7439-95-4	Magnesium	1020		1	4.2	22.9	91.7	mg/Kg	06/20/17 09:32	06/21/17 16:53	SW6010
7439-96-5	Manganese	114		1	0.174	0.229	0.917	mg/Kg	06/20/17 09:32	06/21/17 16:53	SW6010
7439-97-6	Mercury	0.007	U	1	0.007	0.007	0.014	mg/Kg	06/20/17 18:43	06/21/17 18:27	SW7471A
7440-02-0	Nickel	17.3		1	0.422	0.459	1.83	mg/Kg	06/20/17 09:32	06/21/17 16:53	SW6010
7440-09-7	Potassium	776		1	3.21	22.9	91.7	mg/Kg	06/20/17 09:32	06/21/17 16:53	SW6010
7782-49-2	Selenium	3.34		1	0.229	0.229	0.917	mg/Kg	06/20/17 09:32	06/21/17 16:53	SW6010
7440-22-4	Silver	0.56		1	0.115	0.115	0.459	mg/Kg	06/20/17 09:32	06/21/17 16:53	SW6010
7440-23-5	Sodium	83.7	JN	1	2.31	22.9	91.7	mg/Kg	06/20/17 09:32	06/21/17 16:53	SW6010
7440-28-0	Thallium	0.459	U	1	0.248	0.459	1.83	mg/Kg	06/20/17 09:32	06/21/17 16:53	SW6010
7440-62-2	Vanadium	7.29		1	0.459	0.459	1.83	mg/Kg	06/20/17 09:32	06/21/17 16:53	SW6010
7440-66-6	Zinc	19.5		1	0.459	0.459	1.83	mg/Kg	06/20/17 09:32	06/21/17 16:53	SW6010

Color Before:	Brown	Clarity Before:		Texture:	Medium
Color After:	Yellow	Clarity After:		Artifacts:	No
Comments:	METALS-TAL				

U = Not Detected
LOQ = Limit of Quantitation
MDL = Method Detection Limit
LOD = Limit of Detection
D = Dilution
Q = indicates LCS control criteria did not meet requirements

J = Estimated Value
B = Analyte Found in Associated Method Blank
* = indicates the duplicate analysis is not within control limits.
E = Indicates the reported value is estimated because of the presence of interference.
OR = Over Range
N =Spiked sample recovery not within control limits

CHEMTECH 284 Sheffield Street, Mountainside, NJ 07092 Phone: 908 789 8900 Fax: 908 789 8922

Report of Analysis

Client:	LiRo Engineers, Inc.	Date Collected:	06/19/17
Project:	DDC OEGS - Cross Island Pkwy Storm Extension	Date Received:	06/19/17
Client Sample ID:	SB-09-30.5-31.0	SDG No.:	I3781
Lab Sample ID:	I3781-01	Matrix:	SOIL
Analytical Method:	SW8082A	% Moisture:	7.2 Decanted:
Sample Wt/Vol:	30.05 Units: g	Final Vol:	10000 uL
Soil Aliquot Vol:	uL	Test:	PCB
Extraction Type:		Injection Volume :	
GPC Factor :	1.0 PH :		

File ID/Qc Batch:	Dilution:	Prep Date	Date Analyzed	Prep Batch ID
PQ018761.D	1	06/20/17 08:09	06/21/17 17:26	PB99931

CAS Number	Parameter	Conc.	Qualifier	MDL	LOD	LOQ / CRQL	Units(Dry Weight)
TARGETS							
12674-11-2	Aroclor-1016	3.6	U	3.6	3.6	18.3	ug/kg
11104-28-2	Aroclor-1221	3.6	U	3.6	3.6	18.3	ug/kg
11141-16-5	Aroclor-1232	3.6	U	3.6	3.6	18.3	ug/kg
53469-21-9	Aroclor-1242	3.6	U	3.6	3.6	18.3	ug/kg
12672-29-6	Aroclor-1248	3.6	U	3.6	3.6	18.3	ug/kg
11097-69-1	Aroclor-1254	3.6	U	1.6	3.6	18.3	ug/kg
37324-23-5	Aroclor-1262	3.6	U	3.6	3.6	18.3	ug/kg
11100-14-4	Aroclor-1268	3.6	U	3.6	3.6	18.3	ug/kg
11096-82-5	Aroclor-1260	3.6	U	3.6	3.6	18.3	ug/kg
SURROGATES							
877-09-8	Tetrachloro-m-xylene	16.8		10 - 166		84%	SPK: 20
2051-24-3	Decachlorobiphenyl	14.6		60 - 125		73%	SPK: 20

Comments:

U = Not Detected
LOQ = Limit of Quantitation
MDL = Method Detection Limit
LOD = Limit of Detection
E = Value Exceeds Calibration Range
P = Indicates >25% difference for detected concentrations between the two GC columns
Q = indicates LCS control criteria did not meet requirements
M = MS/MSD acceptance criteria did not meet requirements

J = Estimated Value
B = Analyte Found in Associated Method Blank
N = Presumptive Evidence of a Compound
* = Values outside of QC limits
D = Dilution
S = Indicates estimated value where valid five-point calibration was not performed prior to analyte detection in sample.
() = Laboratory InHouse Limit

CHEMTECH 284 Sheffield Street, Mountainside, NJ 07092 Phone: 908 789 8900 Fax: 908 789 8922

Report of Analysis

Client:	LiRo Engineers, Inc.	Date Collected:	06/19/17
Project:	DDC OEGS - Cross Island Pkwy Storm Extension	Date Received:	06/19/17
Client Sample ID:	SB-09-30.5-31.0	SDG No.:	I3781
Lab Sample ID:	I3781-01	Matrix:	SOIL
Analytical Method:	SW8081	% Moisture:	7.2 Decanted:
Sample Wt/Vol:	30.05 Units: g	Final Vol:	10000 uL
Soil Aliquot Vol:	uL	Test:	PESTICIDE Group1
Extraction Type:		Injection Volume	
GPC Factor :	1.0 PH :		

File ID/Qc Batch:	Dilution:	Prep Date	Date Analyzed	Prep Batch ID
PL026250.D	1	06/20/17 08:11	06/20/17 19:48	PB99929

CAS Number	Parameter	Conc.	Qualifier	MDL	LOD	LOQ / CRQL	Units(Dry Weight)
TARGETS							
319-84-6	alpha-BHC	0.355	U	0.14	0.355	1.8	ug/kg
319-85-7	beta-BHC	0.355	U	0.194	0.355	1.8	ug/kg
319-86-8	delta-BHC	0.355	U	0.108	0.355	1.8	ug/kg
58-89-9	gamma-BHC (Lindane)	0.355	U	0.161	0.355	1.8	ug/kg
76-44-8	Heptachlor	0.355	U	0.151	0.355	1.8	ug/kg
309-00-2	Aldrin	0.355	U	0.108	0.355	1.8	ug/kg
1024-57-3	Heptachlor epoxide	0.355	U	0.172	0.355	1.8	ug/kg
959-98-8	Endosulfan I	0.355	U	0.161	0.355	1.8	ug/kg
60-57-1	Dieldrin	0.355	U	0.14	0.355	1.8	ug/kg
72-55-9	4,4-DDE	0.355	U	0.215	0.355	1.8	ug/kg
72-20-8	Endrin	0.355	U	0.194	0.355	1.8	ug/kg
33213-65-9	Endosulfan II	0.355	U	0.151	0.355	1.8	ug/kg
72-54-8	4,4-DDD	0.355	U	0.183	0.355	1.8	ug/kg
1031-07-8	Endosulfan Sulfate	0.355	U	0.161	0.355	1.8	ug/kg
50-29-3	4,4-DDT	0.355	U	0.151	0.355	1.8	ug/kg
72-43-5	Methoxychlor	0.355	U	0.183	0.355	1.8	ug/kg
53494-70-5	Endrin ketone	0.355	U	0.14	0.355	1.8	ug/kg
7421-93-4	Endrin aldehyde	0.355	U	0.161	0.355	1.8	ug/kg
5103-71-9	alpha-Chlordane	0.355	U	0.151	0.355	1.8	ug/kg
5103-74-2	gamma-Chlordane	0.355	U	0.14	0.355	1.8	ug/kg
8001-35-2	Toxaphene	3.6	U	3.6	3.6	18.3	ug/kg
SURROGATES							
2051-24-3	Decachlorobiphenyl	25.6		10 - 169		128%	SPK: 20
877-09-8	Tetrachloro-m-xylene	20.8		31 - 151		104%	SPK: 20

CHEMTECH 284 Sheffield Street, Mountainside, NJ 07092 Phone: 908 789 8900 Fax: 908 789 8922

Report of Analysis

Client:	LiRo Engineers, Inc.	Date Collected:	06/19/17
Project:	DDC OEGS - Cross Island Pkwy Storm Extension	Date Received:	06/19/17
Client Sample ID:	SB-09-30.5-31.0	SDG No.:	I3781
Lab Sample ID:	I3781-01	Matrix:	SOIL
Analytical Method:	SW8081	% Moisture:	7.2 Decanted:
Sample Wt/Vol:	30.05 Units: g	Final Vol:	10000 uL
Soil Aliquot Vol:	uL	Test:	PESTICIDE Group1
Extraction Type:		Injection Volume	
GPC Factor :	1.0 PH :		

File ID/Qc Batch:	Dilution:	Prep Date	Date Analyzed	Prep Batch ID
PL026250.D	1	06/20/17 08:11	06/20/17 19:48	PB99929

CAS Number	Parameter	Conc.	Qualifier	MDL	LOD	LOQ / CRQL	Units

Comments:

U = Not Detected
LOQ = Limit of Quantitation
MDL = Method Detection Limit
LOD = Limit of Detection
E = Value Exceeds Calibration Range
P = Indicates >25% difference for detected concentrations between the two GC columns
Q = indicates LCS control criteria did not meet requirements
M = MS/MSD acceptance criteria did not meet requirements

J = Estimated Value
B = Analyte Found in Associated Method Blank
N = Presumptive Evidence of a Compound
* = Values outside of QC limits
D = Dilution
S = Indicates estimated value where valid five-point calibration was not performed prior to analyte detection in sample.
() = Laboratory InHouse Limit

CHEMTECH 284 Sheffield Street, Mountainside, NJ 07092 Phone: 908 789 8900 Fax: 908 789 8922

Report of Analysis

Client:	LiRo Engineers, Inc.	Date Collected:	06/19/17
Project:	DDC OEGS - Cross Island Pkwy Storm Extension	Date Received:	06/19/17
Client Sample ID:	SB-09-30.5-31.0	SDG No.:	I3781
Lab Sample ID:	I3781-01	Matrix:	SOIL
Analytical Method:	SW8270	% Moisture:	7.2
Sample Wt/Vol:	30.07 Units: g	Final Vol:	1000 uL
Soil Aliquot Vol:	uL	Test:	SVOCMS Group1
Extraction Type :	Decanted : N	Level :	LOW
Injection Volume :	GPC Factor : 1.0	GPC Cleanup :	N PH :

File ID/Qc Batch:	Dilution:	Prep Date	Date Analyzed	Prep Batch ID
BF096136.D	1	06/20/17 08:53	06/22/17 22:47	PB99928

CAS Number	Parameter	Conc.	Qualifier	MDL	LOD	LOQ / CRQL	Units(Dry Weight)
TARGETS							
100-52-7	Benzaldehyde	35.8	U	18.7	35.8	350	ug/Kg
108-95-2	Phenol	35.8	U	8.3	35.8	350	ug/Kg
111-44-4	bis(2-Chloroethyl)ether	35.8	U	17.2	35.8	350	ug/Kg
95-57-8	2-Chlorophenol	35.8	U	18.9	35.8	350	ug/Kg
95-48-7	2-Methylphenol	35.8	U	19.5	35.8	350	ug/Kg
108-60-1	2,2-oxybis(1-Chloropropane)	35.8	U	14.8	35.8	350	ug/Kg
98-86-2	Acetophenone	35.8	U	11	35.8	350	ug/Kg
65794-96-9	3+4-Methylphenols	35.8	U	18.6	35.8	350	ug/Kg
621-64-7	n-Nitroso-di-n-propylamine	35.8	U	18.1	35.8	350	ug/Kg
67-72-1	Hexachloroethane	35.8	U	16	35.8	350	ug/Kg
98-95-3	Nitrobenzene	35.8	U	13.5	35.8	350	ug/Kg
78-59-1	Isophorone	35.8	U	11.8	35.8	350	ug/Kg
88-75-5	2-Nitrophenol	35.8	U	17.3	35.8	350	ug/Kg
105-67-9	2,4-Dimethylphenol	35.8	U	20.3	35.8	350	ug/Kg
111-91-1	bis(2-Chloroethoxy)methane	35.8	U	20.6	35.8	350	ug/Kg
120-83-2	2,4-Dichlorophenol	35.8	U	13.7	35.8	350	ug/Kg
91-20-3	Naphthalene	35.8	U	12.4	35.8	350	ug/Kg
106-47-8	4-Chloroaniline	35.8	U	25.3	35.8	350	ug/Kg
87-68-3	Hexachlorobutadiene	35.8	U	13	35.8	350	ug/Kg
105-60-2	Caprolactam	71.7	U	16.7	71.7	350	ug/Kg
59-50-7	4-Chloro-3-methylphenol	35.8	U	15.9	35.8	350	ug/Kg
91-57-6	2-Methylnaphthalene	35.8	U	9	35.8	350	ug/Kg
77-47-4	Hexachlorocyclopentadiene	35.8	U	8.7	35.8	350	ug/Kg
88-06-2	2,4,6-Trichlorophenol	35.8	U	11	35.8	350	ug/Kg
95-95-4	2,4,5-Trichlorophenol	35.8	U	25.2	35.8	350	ug/Kg
92-52-4	1,1-Biphenyl	35.8	U	13.5	35.8	350	ug/Kg
91-58-7	2-Chloronaphthalene	35.8	U	8.2	35.8	350	ug/Kg
88-74-4	2-Nitroaniline	35.8	U	15.9	35.8	350	ug/Kg
131-11-3	Dimethylphthalate	440		9.7	35.8	350	ug/Kg
208-96-8	Acenaphthylene	35.8	U	9	35.8	350	ug/Kg
606-20-2	2,6-Dinitrotoluene	35.8	U	14.6	35.8	350	ug/Kg

CHEMTECH 284 Sheffield Street, Mountainside, NJ 07092 Phone: 908 789 8900 Fax: 908 789 8922

Report of Analysis

Client:	LiRo Engineers, Inc.	Date Collected:	06/19/17
Project:	DDC OEGS - Cross Island Pkwy Storm Extension	Date Received:	06/19/17
Client Sample ID:	SB-09-30.5-31.0	SDG No.:	I3781
Lab Sample ID:	I3781-01	Matrix:	SOIL
Analytical Method:	SW8270	% Moisture:	7.2
Sample Wt/Vol:	30.07 Units: g	Final Vol:	1000 uL
Soil Aliquot Vol:	uL	Test:	SVOCMS Group1
Extraction Type :	Decanted : N	Level :	LOW
Injection Volume :	GPC Factor : 1.0	GPC Cleanup :	N PH :

File ID/Qc Batch:	Dilution:	Prep Date	Date Analyzed	Prep Batch ID
BF096136.D	1	06/20/17 08:53	06/22/17 22:47	PB99928

CAS Number	Parameter	Conc.	Qualifier	MDL	LOD	LOQ / CRQL	Units(Dry Weight)
99-09-2	3-Nitroaniline	71.7	U	23	71.7	350	ug/Kg
83-32-9	Acenaphthene	35.8	U	10.1	35.8	350	ug/Kg
51-28-5	2,4-Dinitrophenol	290	U	36.4	290	350	ug/Kg
100-02-7	4-Nitrophenol	180	U	66.5	180	350	ug/Kg
132-64-9	Dibenzofuran	35.8	U	14	35.8	350	ug/Kg
121-14-2	2,4-Dinitrotoluene	35.8	U	10.8	35.8	350	ug/Kg
84-66-2	Diethylphthalate	35.8	U	5.6	35.8	350	ug/Kg
7005-72-3	4-Chlorophenyl-phenylether	35.8	U	19.5	35.8	350	ug/Kg
86-73-7	Fluorene	35.8	U	13.5	35.8	350	ug/Kg
100-01-6	4-Nitroaniline	71.7	U	46.7	71.7	350	ug/Kg
534-52-1	4,6-Dinitro-2-methylphenol	180	U	20.5	180	350	ug/Kg
86-30-6	n-Nitrosodiphenylamine	35.8	U	8.6	35.8	350	ug/Kg
101-55-3	4-Bromophenyl-phenylether	35.8	U	7	35.8	350	ug/Kg
118-74-1	Hexachlorobenzene	35.8	U	14.6	35.8	350	ug/Kg
1912-24-9	Atrazine	35.8	U	18.9	35.8	350	ug/Kg
87-86-5	Pentachlorophenol	35.8	U	24.5	35.8	350	ug/Kg
85-01-8	Phenanthrene	35.8	U	9.7	35.8	350	ug/Kg
120-12-7	Anthracene	35.8	U	7.3	35.8	350	ug/Kg
86-74-8	Carbazole	35.8	U	7.8	35.8	350	ug/Kg
84-74-2	Di-n-butylphthalate	35.8	U	28.2	35.8	350	ug/Kg
206-44-0	Fluoranthene	35.8	U	7.2	35.8	350	ug/Kg
129-00-0	Pyrene	35.8	U	8.6	35.8	350	ug/Kg
85-68-7	Butylbenzylphthalate	35.8	U	17.2	35.8	350	ug/Kg
91-94-1	3,3-Dichlorobenzidine	35.8	U	23	35.8	350	ug/Kg
56-55-3	Benzo(a)anthracene	35.8	U	17.1	35.8	350	ug/Kg
218-01-9	Chrysene	35.8	U	16.2	35.8	350	ug/Kg
117-81-7	Bis(2-ethylhexyl)phthalate	35.8	U	12.7	35.8	350	ug/Kg
117-84-0	Di-n-octyl phthalate	35.8	U	4.1	35.8	350	ug/Kg
205-99-2	Benzo(b)fluoranthene	35.8	U	11.7	35.8	350	ug/Kg
207-08-9	Benzo(k)fluoranthene	35.8	U	16.9	35.8	350	ug/Kg
50-32-8	Benzo(a)pyrene	35.8	U	7.7	35.8	350	ug/Kg
193-39-5	Indeno(1,2,3-cd)pyrene	35.8	U	11.9	35.8	350	ug/Kg
53-70-3	Dibenzo(a,h)anthracene	35.8	U	10.3	35.8	350	ug/Kg

CHEMTECH 284 Sheffield Street, Mountainside, NJ 07092 Phone: 908 789 8900 Fax: 908 789 8922

Report of Analysis

Client:	LiRo Engineers, Inc.	Date Collected:	06/19/17
Project:	DDC OEGS - Cross Island Pkwy Storm Extension	Date Received:	06/19/17
Client Sample ID:	SB-09-30.5-31.0	SDG No.:	I3781
Lab Sample ID:	I3781-01	Matrix:	SOIL
Analytical Method:	SW8270	% Moisture:	7.2
Sample Wt/Vol:	30.07 Units: g	Final Vol:	1000 uL
Soil Aliquot Vol:	uL	Test:	SVOCMS Group1
Extraction Type :	Decanted : N	Level :	LOW
Injection Volume :	GPC Factor : 1.0	GPC Cleanup :	N PH :

File ID/Qc Batch:	Dilution:	Prep Date	Date Analyzed	Prep Batch ID
BF096136.D	1	06/20/17 08:53	06/22/17 22:47	PB99928

CAS Number	Parameter	Conc.	Qualifier	MDL	LOD	LOQ / CRQL	Units(Dry Weight)
191-24-2	Benzo(g,h,i)perylene	35.8	U	14.5	35.8	350	ug/Kg
95-94-3	1,2,4,5-Tetrachlorobenzene	35.8	U	14.1	35.8	350	ug/Kg
123-91-1	1,4-Dioxane	71.7	U	14.1	71.7	350	ug/Kg
58-90-2	2,3,4,6-Tetrachlorophenol	35.8	U	14.1	35.8	350	ug/Kg
SURROGATES							
367-12-4	2-Fluorophenol	94.1		28 - 127		63%	SPK: 150
13127-88-3	Phenol-d6	100		34 - 127		68%	SPK: 150
4165-60-0	Nitrobenzene-d5	70.8		31 - 132		71%	SPK: 100
321-60-8	2-Fluorobiphenyl	74.4		39 - 123		74%	SPK: 100
118-79-6	2,4,6-Tribromophenol	81.5		30 - 133		54%	SPK: 150
1718-51-0	Terphenyl-d14	66.2		37 - 115		66%	SPK: 100
INTERNAL STANDARDS							
3855-82-1	1,4-Dichlorobenzene-d4	95242	7.27				
1146-65-2	Naphthalene-d8	356801	9.31				
15067-26-2	Acenaphthene-d10	143938	12.13				
1517-22-2	Phenanthrene-d10	261514	14.53				
1719-03-5	Chrysene-d12	160835	18.27				
1520-96-3	Perylene-d12	142312	19.94				

U = Not Detected
LOQ = Limit of Quantitation
MDL = Method Detection Limit
LOD = Limit of Detection
E = Value Exceeds Calibration Range
Q = indicates LCS control criteria did not meet requirements
M = MS/MSD acceptance criteria did not meet requirements

J = Estimated Value
B = Analyte Found in Associated Method Blank
N = Presumptive Evidence of a Compound
* = Values outside of QC limits
D = Dilution
() = Laboratory InHouse Limit

CHEMTECH 284 Sheffield Street, Mountainside, NJ 07092 Phone: 908 789 8900 Fax: 908 789 8922

Report of Analysis

Client:	LiRo Engineers, Inc.	Date Collected:	06/19/17
Project:	DDC OEGS - Cross Island Pkwy Storm Extension	Date Received:	06/19/17
Client Sample ID:	SB-09-30.5-31.0	SDG No.:	I3781
Lab Sample ID:	I3781-01	Matrix:	SOIL
Analytical Method:	SW8260	% Moisture:	7.2
Sample Wt/Vol:	5 Units: g	Final Vol:	5000 uL
Soil Aliquot Vol:	uL	Test:	VOCMS Group1
GC Column:	RTX-VMS ID : 0.18	Level :	LOW

File ID/Qc Batch:	Dilution:	Prep Date	Date Analyzed	Prep Batch ID
VF053105.D	1		06/21/17 15:57	VF062117

CAS Number	Parameter	Conc.	Qualifier	MDL	LOD	LOQ / CRQL	Units(Dry Weight)
TARGETS							
75-71-8	Dichlorodifluoromethane	0.54	U	0.54	0.54	5.4	ug/Kg
74-87-3	Chloromethane	0.54	U	0.54	0.54	5.4	ug/Kg
75-01-4	Vinyl Chloride	0.54	U	0.54	0.54	5.4	ug/Kg
74-83-9	Bromomethane	1.1	U	1.1	1.1	5.4	ug/Kg
75-00-3	Chloroethane	0.54	U	0.54	0.54	5.4	ug/Kg
75-69-4	Trichlorofluoromethane	0.54	U	0.54	0.54	5.4	ug/Kg
76-13-1	1,1,2-Trichlorotrifluoroethane	0.54	U	0.54	0.54	5.4	ug/Kg
75-65-0	Tert butyl alcohol	26.9	U	8	26.9	26.9	ug/Kg
75-35-4	1,1-Dichloroethene	0.54	U	0.54	0.54	5.4	ug/Kg
67-64-1	Acetone	2.7	U	2.7	2.7	26.9	ug/Kg
75-15-0	Carbon Disulfide	0.54	U	0.54	0.54	5.4	ug/Kg
1634-04-4	Methyl tert-butyl Ether	0.54	U	0.54	0.54	5.4	ug/Kg
79-20-9	Methyl Acetate	1.1	U	1.1	1.1	5.4	ug/Kg
75-09-2	Methylene Chloride	3.8	J	0.54	0.54	5.4	ug/Kg
156-60-5	trans-1,2-Dichloroethene	0.54	U	0.54	0.54	5.4	ug/Kg
75-34-3	1,1-Dichloroethane	0.54	U	0.54	0.54	5.4	ug/Kg
110-82-7	Cyclohexane	0.54	U	0.54	0.54	5.4	ug/Kg
78-93-3	2-Butanone	8.1	U	3.4	8.1	26.9	ug/Kg
56-23-5	Carbon Tetrachloride	0.54	U	0.54	0.54	5.4	ug/Kg
156-59-2	cis-1,2-Dichloroethene	0.54	U	0.54	0.54	5.4	ug/Kg
74-97-5	Bromochloromethane	0.54	U	0.54	0.54	5.4	ug/Kg
67-66-3	Chloroform	0.54	U	0.54	0.54	5.4	ug/Kg
71-55-6	1,1,1-Trichloroethane	0.54	U	0.54	0.54	5.4	ug/Kg
108-87-2	Methylcyclohexane	0.54	U	0.54	0.54	5.4	ug/Kg
71-43-2	Benzene	0.54	U	0.41	0.54	5.4	ug/Kg
107-06-2	1,2-Dichloroethane	0.54	U	0.54	0.54	5.4	ug/Kg
79-01-6	Trichloroethene	0.54	U	0.54	0.54	5.4	ug/Kg
78-87-5	1,2-Dichloropropane	0.54	U	0.28	0.54	5.4	ug/Kg
5-27-4	Bromodichloromethane	0.54	U	0.54	0.54	5.4	ug/Kg
08-10-1	4-Methyl-2-Pentanone	2.7	U	2.7	2.7	26.9	ug/Kg
108-88-3	Toluene	0.54	U	0.54	0.54	5.4	ug/Kg
10061-02-6	t-1,3-Dichloropropene	0.54	U	0.54	0.54	5.4	ug/Kg

CHEMTECH 284 Sheffield Street, Mountainside, NJ 07092 Phone: 908 789 8900 Fax: 908 789 8922

Report of Analysis

Client:	LiRo Engineers, Inc.	Date Collected:	06/19/17
Project:	DDC OEGS - Cross Island Pkwy Storm Extension	Date Received:	06/19/17
Client Sample ID:	SB-09-30.5-31.0	SDG No.:	I3781
Lab Sample ID:	I3781-01	Matrix:	SOIL
Analytical Method:	SW8260	% Moisture:	7.2
Sample Wt/Vol:	5 Units: g	Final Vol:	5000 uL
Soil Aliquot Vol:	uL	Test:	VOCMS Group1
GC Column:	RTX-VMS ID : 0.18	Level :	LOW

File ID/Qc Batch:	Dilution:	Prep Date	Date Analyzed	Prep Batch ID
VF053105.D	1		06/21/17 15:57	VF062117

CAS Number	Parameter	Conc.	Qualifier	MDL	LOD	LOQ / CRQL	Units(Dry Weight)
10061-01-5	cis-1,3-Dichloropropene	0.54	U	0.54	0.54	5.4	ug/Kg
79-00-5	1,1,2-Trichloroethane	1.1	U	0.97	1.1	5.4	ug/Kg
591-78-6	2-Hexanone	2.7	U	2.7	2.7	26.9	ug/Kg
124-48-1	Dibromochloromethane	0.54	U	0.54	0.54	5.4	ug/Kg
106-93-4	1,2-Dibromoethane	0.54	U	0.54	0.54	5.4	ug/Kg
127-18-4	Tetrachloroethene	0.54	U	0.54	0.54	5.4	ug/Kg
108-90-7	Chlorobenzene	0.54	U	0.54	0.54	5.4	ug/Kg
100-41-4	Ethyl Benzene	0.54	U	0.54	0.54	5.4	ug/Kg
179601-23-1	m/p-Xylenes	1.1	U	0.78	1.1	10.8	ug/Kg
95-47-6	o-Xylene	0.54	U	0.54	0.54	5.4	ug/Kg
100-42-5	Styrene	0.54	U	0.48	0.54	5.4	ug/Kg
75-25-2	Bromoform	1.6	U	0.8	1.6	5.4	ug/Kg
98-82-8	Isopropylbenzene	0.54	U	0.52	0.54	5.4	ug/Kg
79-34-5	1,1,2,2-Tetrachloroethane	0.54	U	0.5	0.54	5.4	ug/Kg
541-73-1	1,3-Dichlorobenzene	0.54	U	0.4	0.54	5.4	ug/Kg
106-46-7	1,4-Dichlorobenzene	0.54	U	0.44	0.54	5.4	ug/Kg
95-50-1	1,2-Dichlorobenzene	0.54	U	0.54	0.54	5.4	ug/Kg
96-12-8	1,2-Dibromo-3-Chloropropane	5.4	U	0.94	5.4	5.4	ug/Kg
120-82-1	1,2,4-Trichlorobenzene	0.54	U	0.54	0.54	5.4	ug/Kg
87-61-6	1,2,3-Trichlorobenzene	1.1	U	0.54	1.1	5.4	ug/Kg
SURROGATES							
17060-07-0	1,2-Dichloroethane-d4	46.5		56 - 120		93%	SPK: 50
1868-53-7	Dibromofluoromethane	49.2		57 - 135		98%	SPK: 50
2037-26-5	Toluene-d8	46.3		67 - 123		93%	SPK: 50
460-00-4	4-Bromofluorobenzene	46		33 - 141		92%	SPK: 50
INTERNAL STANDARDS							
363-72-4	Pentafluorobenzene	328784	4.82				
540-36-3	1,4-Difluorobenzene	644953	5.54				
3114-55-4	Chlorobenzene-d5	582114	9.71				
3855-82-1	1,4-Dichlorobenzene-d4	252351	12.5				

CHEMTECH 284 Sheffield Street, Mountainside, NJ 07092 Phone: 908 789 8900 Fax: 908 789 8922

Report of Analysis

Client:	LiRo Engineers, Inc.	Date Collected:	06/19/17
Project:	DDC OEGS - Cross Island Pkwy Storm Extension	Date Received:	06/19/17
Client Sample ID:	SB-09-30.5-31.0	SDG No.:	I3781
Lab Sample ID:	I3781-01	Matrix:	SOIL
Analytical Method:	SW8260	% Moisture:	7.2
Sample Wt/Vol:	5 Units: g	Final Vol:	5000 uL
Soil Aliquot Vol:	uL	Test:	VOCMS Group1
GC Column:	RTX-VMS ID : 0.18	Level :	LOW

File ID/Qc Batch:	Dilution:	Prep Date	Date Analyzed	Prep Batch ID
VF053105.D	1		06/21/17 15:57	VF062117

CAS Number	Parameter	Conc.	Qualifier	MDL	LOD	LOQ / CRQL	Units

U = Not Detected
LOQ = Limit of Quantitation
MDL = Method Detection Limit
LOD = Limit of Detection
E = Value Exceeds Calibration Range
Q = indicates LCS control criteria did not meet requirements
M = MS/MSD acceptance criteria did not meet requirements

J = Estimated Value
B = Analyte Found in Associated Method Blank
N = Presumptive Evidence of a Compound
* = Values outside of QC limits
D = Dilution
() = Laboratory InHouse Limit

CHEMTECH 284 Sheffield Street, Mountainside, NJ 07092 Phone: 908 789 8900 Fax: 908 789 8922

Report of Analysis

Client:	LiRo Engineers, Inc.	Date Collected:	06/19/17
Project:	DDC OEGS - Cross Island Pkwy Storm Extension	Date Received:	06/19/17
Client Sample ID:	SB-09-30.5-31.0-DUP	SDG No.:	I3781
Lab Sample ID:	I3781-02	Matrix:	SOIL
Level (low/med):	low	% Solid:	97.6

Cas	Parameter	Conc.	Qua.	DF	MDL	LOD	LOQ / CRQL	Units(Dry Weight)	Prep Date	Date Ana.	Ana Met.
7429-90-5	Aluminum	1440		1	0.729	1.09	4.34	mg/Kg	06/20/17 09:32	06/21/17 16:57	SW6010
7440-36-0	Antimony	0.543	UN	1	0.486	0.543	2.17	mg/Kg	06/20/17 09:32	06/21/17 16:57	SW6010
7440-38-2	Arsenic	0.371	J	1	0.217	0.217	0.868	mg/Kg	06/20/17 09:32	06/21/17 16:57	SW6010
7440-39-3	Barium	10.4		1	0.347	1.09	4.34	mg/Kg	06/20/17 09:32	06/21/17 16:57	SW6010
7440-41-7	Beryllium	0.059	J	1	0.052	0.065	0.26	mg/Kg	06/20/17 09:32	06/21/17 16:57	SW6010
7440-43-9	Cadmium	0.065	U	1	0.052	0.065	0.26	mg/Kg	06/20/17 09:32	06/21/17 16:57	SW6010
7440-70-2	Calcium	114		1	0.929	21.7	86.8	mg/Kg	06/20/17 09:32	06/21/17 16:57	SW6010
7440-47-3	Chromium	3.72		1	0.109	0.109	0.434	mg/Kg	06/20/17 09:32	06/21/17 16:57	SW6010
7440-48-4	Cobalt	1.06	J	1	0.326	0.326	1.3	mg/Kg	06/20/17 09:32	06/21/17 16:57	SW6010
7440-50-8	Copper	2.91		1	0.217	0.217	0.868	mg/Kg	06/20/17 09:32	06/21/17 16:57	SW6010
7439-89-6	Iron	2960		1	1.09	1.09	4.34	mg/Kg	06/20/17 09:32	06/21/17 16:57	SW6010
7439-92-1	Lead	5.96	N	1	0.104	0.217	0.521	mg/Kg	06/20/17 09:32	06/21/17 16:57	SW6010
7439-95-4	Magnesium	571		1	3.98	21.7	86.8	mg/Kg	06/20/17 09:32	06/21/17 16:57	SW6010
7439-96-5	Manganese	73.3		1	0.165	0.217	0.868	mg/Kg	06/20/17 09:32	06/21/17 16:57	SW6010
7439-97-6	Mercury	0.007	U	1	0.007	0.007	0.014	mg/Kg	06/20/17 18:43	06/21/17 18:29	SW7471A
7440-02-0	Nickel	4.51		1	0.399	0.434	1.74	mg/Kg	06/20/17 09:32	06/21/17 16:57	SW6010
7440-09-7	Potassium	363		1	3.04	21.7	86.8	mg/Kg	06/20/17 09:32	06/21/17 16:57	SW6010
7782-49-2	Selenium	1.02		1	0.217	0.217	0.868	mg/Kg	06/20/17 09:32	06/21/17 16:57	SW6010
7440-22-4	Silver	0.161	J	1	0.109	0.109	0.434	mg/Kg	06/20/17 09:32	06/21/17 16:57	SW6010
7440-23-5	Sodium	49.8	JN	1	2.19	21.7	86.8	mg/Kg	06/20/17 09:32	06/21/17 16:57	SW6010
7440-28-0	Thallium	0.434	U	1	0.234	0.434	1.74	mg/Kg	06/20/17 09:32	06/21/17 16:57	SW6010
7440-62-2	Vanadium	4.06		1	0.434	0.434	1.74	mg/Kg	06/20/17 09:32	06/21/17 16:57	SW6010
7440-66-6	Zinc	7.83		1	0.434	0.434	1.74	mg/Kg	06/20/17 09:32	06/21/17 16:57	SW6010

Color Before:	Brown	Clarity Before:		Texture:	Medium
Color After:	Yellow	Clarity After:		Artifacts:	No
Comments:	METALS-TAL				

U = Not Detected
LOQ = Limit of Quantitation
MDL = Method Detection Limit
LOD = Limit of Detection
D = Dilution
Q = indicates LCS control criteria did not meet requirements

J = Estimated Value
B = Analyte Found in Associated Method Blank
* = indicates the duplicate analysis is not within control limits.
E = Indicates the reported value is estimated because of the presence of interference.
OR = Over Range
N =Spiked sample recovery not within control limits

CHEMTECH 284 Sheffield Street, Mountainside, NJ 07092 Phone: 908 789 8900 Fax: 908 789 8922

Report of Analysis

Client:	LiRo Engineers, Inc.	Date Collected:	06/19/17
Project:	DDC OEGS - Cross Island Pkwy Storm Extension	Date Received:	06/19/17
Client Sample ID:	SB-09-30.5-31.0-DUP	SDG No.:	I3781
Lab Sample ID:	I3781-02	Matrix:	SOIL
Analytical Method:	SW8082A	% Moisture:	2.4 Decanted:
Sample Wt/Vol:	30.08 Units: g	Final Vol:	10000 uL
Soil Aliquot Vol:	uL	Test:	PCB
Extraction Type:		Injection Volume :	
GPC Factor :	1.0 PH :		

File ID/Qc Batch:	Dilution:	Prep Date	Date Analyzed	Prep Batch ID
PQ018762.D	1	06/20/17 08:09	06/21/17 17:40	PB99931

CAS Number	Parameter	Conc.	Qualifier	MDL	LOD	LOQ / CRQL	Units(Dry Weight)
TARGETS							
12674-11-2	Aroclor-1016	3.4	U	3.4	3.4	17.4	ug/kg
11104-28-2	Aroclor-1221	3.4	U	3.4	3.4	17.4	ug/kg
11141-16-5	Aroclor-1232	3.4	U	3.4	3.4	17.4	ug/kg
53469-21-9	Aroclor-1242	3.4	U	3.4	3.4	17.4	ug/kg
12672-29-6	Aroclor-1248	3.4	U	3.4	3.4	17.4	ug/kg
11097-69-1	Aroclor-1254	3.4	U	1.5	3.4	17.4	ug/kg
37324-23-5	Aroclor-1262	3.4	U	3.4	3.4	17.4	ug/kg
11100-14-4	Aroclor-1268	3.4	U	3.4	3.4	17.4	ug/kg
11096-82-5	Aroclor-1260	3.4	U	3.4	3.4	17.4	ug/kg
SURROGATES							
877-09-8	Tetrachloro-m-xylene	17.4		10 - 166		87%	SPK: 20
2051-24-3	Decachlorobiphenyl	14.2		60 - 125		71%	SPK: 20

Comments:

U = Not Detected
LOQ = Limit of Quantitation
MDL = Method Detection Limit
LOD = Limit of Detection
= Value Exceeds Calibration Range
P = Indicates >25% difference for detected concentrations between the two GC columns
Q = indicates LCS control criteria did not meet requirements
M = MS/MSD acceptance criteria did not meet requirements

J = Estimated Value
B = Analyte Found in Associated Method Blank
N = Presumptive Evidence of a Compound
* = Values outside of QC limits
D = Dilution
S = Indicates estimated value where valid five-point calibration was not performed prior to analyte detection in sample.
() = Laboratory InHouse Limit

CHEMTECH 284 Sheffield Street, Mountainside, NJ 07092 Phone: 908 789 8900 Fax: 908 789 8922

Report of Analysis

Client:	LiRo Engineers, Inc.	Date Collected:	06/19/17
Project:	DDC OEGS - Cross Island Pkwy Storm Extension	Date Received:	06/19/17
Client Sample ID:	SB-09-30.5-31.0-DUP	SDG No.:	I3781
Lab Sample ID:	I3781-02	Matrix:	SOIL
Analytical Method:	SW8081	% Moisture:	2.4 Decanted:
Sample Wt/Vol:	30.08 Units: g	Final Vol:	10000 uL
Soil Aliquot Vol:	uL	Test:	PESTICIDE Group1
Extraction Type:		Injection Volume	
GPC Factor :	1.0 PH :		

File ID/Qc Batch:	Dilution:	Prep Date	Date Analyzed	Prep Batch ID
PL026251.D	1	06/20/17 08:11	06/20/17 20:03	PB99929

CAS Number	Parameter	Conc.	Qualifier	MDL	LOD	LOQ / CRQL	Units(Dry Weight)
TARGETS							
319-84-6	alpha-BHC	0.337	U	0.133	0.337	1.7	ug/kg
319-85-7	beta-BHC	0.337	U	0.184	0.337	1.7	ug/kg
319-86-8	delta-BHC	0.337	U	0.102	0.337	1.7	ug/kg
58-89-9	gamma-BHC (Lindane)	0.337	U	0.153	0.337	1.7	ug/kg
76-44-8	Heptachlor	0.337	U	0.143	0.337	1.7	ug/kg
309-00-2	Aldrin	0.337	U	0.102	0.337	1.7	ug/kg
1024-57-3	Heptachlor epoxide	0.337	U	0.164	0.337	1.7	ug/kg
959-98-8	Endosulfan I	0.337	U	0.153	0.337	1.7	ug/kg
60-57-1	Dieldrin	0.337	U	0.133	0.337	1.7	ug/kg
72-55-9	4,4-DDE	0.337	U	0.204	0.337	1.7	ug/kg
72-20-8	Endrin	0.337	U	0.184	0.337	1.7	ug/kg
33213-65-9	Endosulfan II	0.337	U	0.143	0.337	1.7	ug/kg
72-54-8	4,4-DDD	0.337	U	0.174	0.337	1.7	ug/kg
1031-07-8	Endosulfan Sulfate	0.337	U	0.153	0.337	1.7	ug/kg
50-29-3	4,4-DDT	0.337	U	0.143	0.337	1.7	ug/kg
72-43-5	Methoxychlor	0.337	U	0.174	0.337	1.7	ug/kg
53494-70-5	Endrin ketone	0.337	U	0.133	0.337	1.7	ug/kg
7421-93-4	Endrin aldehyde	0.337	U	0.153	0.337	1.7	ug/kg
5103-71-9	alpha-Chlordane	0.337	U	0.143	0.337	1.7	ug/kg
5103-74-2	gamma-Chlordane	0.337	U	0.133	0.337	1.7	ug/kg
8001-35-2	Toxaphene	3.4	U	3.4	3.4	17.4	ug/kg
SURROGATES							
2051-24-3	Decachlorobiphenyl	23.5		10 - 169		117%	SPK: 20
877-09-8	Tetrachloro-m-xylene	18.9		31 - 151		95%	SPK: 20

CHEMTECH 284 Sheffield Street, Mountainside, NJ 07092 Phone: 908 789 8900 Fax: 908 789 8922

Report of Analysis

Client:	LiRo Engineers, Inc.	Date Collected:	06/19/17
Project:	DDC OEGS - Cross Island Pkwy Storm Extension	Date Received:	06/19/17
Client Sample ID:	SB-09-30.5-31.0-DUP	SDG No.:	I3781
Lab Sample ID:	I3781-02	Matrix:	SOIL
Analytical Method:	SW8081	% Moisture:	2.4 Decanted:
Sample Wt/Vol:	30.08 Units: g	Final Vol:	10000 uL
Soil Aliquot Vol:	uL	Test:	PESTICIDE Group1
Extraction Type:		Injection Volume	
GPC Factor :	1.0 PH :		

File ID/Qc Batch:	Dilution:	Prep Date	Date Analyzed	Prep Batch ID
PL026251.D	1	06/20/17 08:11	06/20/17 20:03	PB99929

CAS Number	Parameter	Conc.	Qualifier	MDL	LOD	LOQ / CRQL	Units

Comments:

U = Not Detected
LOQ = Limit of Quantitation
MDL = Method Detection Limit
LOD = Limit of Detection
= Value Exceeds Calibration Range
P = Indicates >25% difference for detected concentrations between the two GC columns
Q = indicates LCS control criteria did not meet requirements
M = MS/MSD acceptance criteria did not meet requirements

J = Estimated Value
B = Analyte Found in Associated Method Blank
N = Presumptive Evidence of a Compound
* = Values outside of QC limits
D = Dilution
S = Indicates estimated value where valid five-point calibration was not performed prior to analyte detection in sample.
() = Laboratory InHouse Limit

CHEMTECH 284 Sheffield Street, Mountainside, NJ 07092 Phone: 908 789 8900 Fax: 908 789 8922

Report of Analysis

Client:	LiRo Engineers, Inc.	Date Collected:	06/19/17
Project:	DDC OEGS - Cross Island Pkwy Storm Extension	Date Received:	06/19/17
Client Sample ID:	SB-09-30.5-31.0-DUP	SDG No.:	I3781
Lab Sample ID:	I3781-02	Matrix:	SOIL
Analytical Method:	SW8270	% Moisture:	2.4
Sample Wt/Vol:	30.09 Units: g	Final Vol:	1000 uL
Soil Aliquot Vol:	uL	Test:	SVOCMS Group1
Extraction Type :	Decanted : N	Level :	LOW
Injection Volume :	GPC Factor : 1.0	GPC Cleanup :	N PH :

File ID/Qc Batch:	Dilution:	Prep Date	Date Analyzed	Prep Batch ID
BG027586.D	1	06/20/17 08:53	06/22/17 08:24	PB99928

CAS Number	Parameter	Conc.	Qualifier	MDL	LOD	LOQ / CRQL	Units(Dry Weight)
TARGETS							
100-52-7	Benzaldehyde	34.1	U	17.8	34.1	340	ug/Kg
108-95-2	Phenol	92.6	J	7.9	34.1	340	ug/Kg
111-44-4	bis(2-Chloroethyl)ether	34.1	U	16.3	34.1	340	ug/Kg
95-57-8	2-Chlorophenol	34.1	U	18	34.1	340	ug/Kg
95-48-7	2-Methylphenol	34.1	U	18.5	34.1	340	ug/Kg
108-60-1	2,2-oxybis(1-Chloropropane)	34.1	U	14.1	34.1	340	ug/Kg
98-86-2	Acetophenone	34.1	U	10.4	34.1	340	ug/Kg
65794-96-9	3+4-Methylphenols	34.1	U	17.7	34.1	340	ug/Kg
621-64-7	n-Nitroso-di-n-propylamine	34.1	U	17.2	34.1	340	ug/Kg
67-72-1	Hexachloroethane	34.1	U	15.2	34.1	340	ug/Kg
98-95-3	Nitrobenzene	34.1	U	12.9	34.1	340	ug/Kg
78-59-1	Isophorone	34.1	U	11.2	34.1	340	ug/Kg
88-75-5	2-Nitrophenol	34.1	U	16.4	34.1	340	ug/Kg
105-67-9	2,4-Dimethylphenol	34.1	U	19.3	34.1	340	ug/Kg
111-91-1	bis(2-Chloroethoxy)methane	34.1	U	19.6	34.1	340	ug/Kg
120-83-2	2,4-Dichlorophenol	34.1	U	13	34.1	340	ug/Kg
91-20-3	Naphthalene	34.1	U	11.7	34.1	340	ug/Kg
106-47-8	4-Chloroaniline	34.1	U	24	34.1	340	ug/Kg
87-68-3	Hexachlorobutadiene	34.1	U	12.4	34.1	340	ug/Kg
105-60-2	Caprolactam	68.1	U	15.8	68.1	340	ug/Kg
59-50-7	4-Chloro-3-methylphenol	34.1	U	15.1	34.1	340	ug/Kg
91-57-6	2-Methylnaphthalene	34.1	U	8.6	34.1	340	ug/Kg
77-47-4	Hexachlorocyclopentadiene	34.1	U	8.3	34.1	340	ug/Kg
88-06-2	2,4,6-Trichlorophenol	34.1	U	10.4	34.1	340	ug/Kg
95-95-4	2,4,5-Trichlorophenol	34.1	U	23.9	34.1	340	ug/Kg
92-52-4	1,1-Biphenyl	34	U	12.9	34	340	ug/Kg
91-58-7	2-Chloronaphthalene	34.1	U	7.8	34.1	340	ug/Kg
88-74-4	2-Nitroaniline	34.1	U	15.1	34.1	340	ug/Kg
131-11-3	Dimethylphthalate	440		9.2	34.1	340	ug/Kg
208-96-8	Acenaphthylene	34.1	U	8.6	34.1	340	ug/Kg
606-20-2	2,6-Dinitrotoluene	34.1	U	13.9	34.1	340	ug/Kg

CHEMTECH 284 Sheffield Street, Mountainside, NJ 07092 Phone: 908 789 8900 Fax: 908 789 8922

Report of Analysis

Client:	LiRo Engineers, Inc.	Date Collected:	06/19/17
Project:	DDC OEGS - Cross Island Pkwy Storm Extension	Date Received:	06/19/17
Client Sample ID:	SB-09-30.5-31.0-DUP	SDG No.:	I3781
Lab Sample ID:	I3781-02	Matrix:	SOIL
Analytical Method:	SW8270	% Moisture:	2.4
Sample Wt/Vol:	30.09 Units: g	Final Vol:	1000 uL
Soil Aliquot Vol:	uL	Test:	SVOCMS Group1
Extraction Type :	Decanted : N	Level :	LOW
Injection Volume :	GPC Factor : 1.0	GPC Cleanup :	N PH :

File ID/Qc Batch:	Dilution:	Prep Date	Date Analyzed	Prep Batch ID
BG027586.D	1	06/20/17 08:53	06/22/17 08:24	PB99928

CAS Number	Parameter	Conc.	Qualifier	MDL	LOD	LOQ / CRQL	Units(Dry Weight)
99-09-2	3-Nitroaniline	68.1	U	21.9	68.1	340	ug/Kg
83-32-9	Acenaphthene	34.1	U	9.6	34.1	340	ug/Kg
51-28-5	2,4-Dinitrophenol	270	U	34.6	270	340	ug/Kg
100-02-7	4-Nitrophenol	170	U	63.2	170	340	ug/Kg
132-64-9	Dibenzofuran	34.1	U	13.3	34.1	340	ug/Kg
121-14-2	2,4-Dinitrotoluene	34.1	U	10.2	34.1	340	ug/Kg
84-66-2	Diethylphthalate	34.1	U	5.3	34.1	340	ug/Kg
7005-72-3	4-Chlorophenyl-phenylether	34.1	U	18.5	34.1	340	ug/Kg
86-73-7	Fluorene	34.1	U	12.9	34.1	340	ug/Kg
100-01-6	4-Nitroaniline	68.1	U	44.3	68.1	340	ug/Kg
534-52-1	4,6-Dinitro-2-methylphenol	170	U	19.5	170	340	ug/Kg
86-30-6	n-Nitrosodiphenylamine	34.1	U	8.2	34.1	340	ug/Kg
101-55-3	4-Bromophenyl-phenylether	34.1	U	6.6	34.1	340	ug/Kg
118-74-1	Hexachlorobenzene	34.1	U	13.9	34.1	340	ug/Kg
1912-24-9	Atrazine	34.1	U	18	34.1	340	ug/Kg
87-86-5	Pentachlorophenol	34.1	U	23.3	34.1	340	ug/Kg
85-01-8	Phenanthrene	34.1	U	9.2	34.1	340	ug/Kg
120-12-7	Anthracene	34.1	U	6.9	34.1	340	ug/Kg
86-74-8	Carbazole	34.1	U	7.5	34.1	340	ug/Kg
84-74-2	Di-n-butylphthalate	34.1	U	26.8	34.1	340	ug/Kg
206-44-0	Fluoranthene	34.1	U	6.8	34.1	340	ug/Kg
129-00-0	Pyrene	34.1	U	8.2	34.1	340	ug/Kg
85-68-7	Butylbenzylphthalate	34.1	U	16.3	34.1	340	ug/Kg
91-94-1	3,3-Dichlorobenzidine	34.1	U	21.9	34.1	340	ug/Kg
56-55-3	Benzo(a)anthracene	34.1	U	16.2	34.1	340	ug/Kg
218-01-9	Chrysene	34.1	U	15.4	34.1	340	ug/Kg
117-81-7	Bis(2-ethylhexyl)phthalate	34.1	U	12.1	34.1	340	ug/Kg
117-84-0	Di-n-octyl phthalate	34.1	U	3.9	34.1	340	ug/Kg
205-99-2	Benzo(b)fluoranthene	34.1	U	11.1	34.1	340	ug/Kg
207-08-9	Benzo(k)fluoranthene	34.1	U	16	34.1	340	ug/Kg
50-32-8	Benzo(a)pyrene	34.1	U	7.4	34.1	340	ug/Kg
193-39-5	Indeno(1,2,3-cd)pyrene	34.1	U	11.3	34.1	340	ug/Kg
53-70-3	Dibenzo(a,h)anthracene	34.1	U	9.8	34.1	340	ug/Kg

CHEMTECH 284 Sheffield Street, Mountainside, NJ 07092 Phone: 908 789 8900 Fax: 908 789 8922

Report of Analysis

Client:	LiRo Engineers, Inc.	Date Collected:	06/19/17
Project:	DDC OEGS - Cross Island Pkwy Storm Extension	Date Received:	06/19/17
Client Sample ID:	SB-09-30.5-31.0-DUP	SDG No.:	I3781
Lab Sample ID:	I3781-02	Matrix:	SOIL
Analytical Method:	SW8270	% Moisture:	2.4
Sample Wt/Vol:	30.09 Units: g	Final Vol:	1000 uL
Soil Aliquot Vol:	uL	Test:	SVOCMS Group1
Extraction Type :	Decanted : N	Level :	LOW
Injection Volume :	GPC Factor : 1.0	GPC Cleanup :	N PH :

File ID/Qc Batch:	Dilution:	Prep Date	Date Analyzed	Prep Batch ID
BG027586.D	1	06/20/17 08:53	06/22/17 08:24	PB99928

CAS Number	Parameter	Conc.	Qualifier	MDL	LOD	LOQ / CRQL	Units(Dry Weight)
191-24-2	Benzo(g,h,i)perylene	34.1	U	13.8	34.1	340	ug/Kg
95-94-3	1,2,4,5-Tetrachlorobenzene	34.1	U	13.4	34.1	340	ug/Kg
123-91-1	1,4-Dioxane	68.1	U	13.4	68.1	340	ug/Kg
58-90-2	2,3,4,6-Tetrachlorophenol	34.1	U	13.4	34.1	340	ug/Kg
SURROGATES							
367-12-4	2-Fluorophenol	140		28 - 127		92%	SPK: 150
13127-88-3	Phenol-d6	130		34 - 127		87%	SPK: 150
4165-60-0	Nitrobenzene-d5	81.4		31 - 132		81%	SPK: 100
321-60-8	2-Fluorobiphenyl	83.2		39 - 123		83%	SPK: 100
118-79-6	2,4,6-Tribromophenol	150		30 - 133		100%	SPK: 150
1718-51-0	Terphenyl-d14	92.1		37 - 115		92%	SPK: 100
INTERNAL STANDARDS							
3855-82-1	1,4-Dichlorobenzene-d4	19371	8.5				
1146-65-2	Naphthalene-d8	94457	11.32				
15067-26-2	Acenaphthene-d10	59372	15.08				
1517-22-2	Phenanthrene-d10	178580	17.83				
1719-03-5	Chrysene-d12	196987	22.2				
1520-96-3	Perylene-d12	187118	25.84				

U = Not Detected
LOQ = Limit of Quantitation
MDL = Method Detection Limit
LOD = Limit of Detection
E = Value Exceeds Calibration Range
Q = indicates LCS control criteria did not meet requirements
M = MS/MSD acceptance criteria did not meet requirements

J = Estimated Value
B = Analyte Found in Associated Method Blank
N = Presumptive Evidence of a Compound
* = Values outside of QC limits
D = Dilution
() = Laboratory InHouse Limit

CHEMTECH 284 Sheffield Street, Mountainside, NJ 07092 Phone: 908 789 8900 Fax: 908 789 8922

Report of Analysis

Client:	LiRo Engineers, Inc.	Date Collected:	06/19/17
Project:	DDC OEGS - Cross Island Pkwy Storm Extension	Date Received:	06/19/17
Client Sample ID:	SB-09-30.5-31.0-DUP	SDG No.:	I3781
Lab Sample ID:	I3781-02	Matrix:	SOIL
Analytical Method:	SW8260	% Moisture:	2.4
Sample Wt/Vol:	4.98 Units: g	Final Vol:	5000 uL
Soil Aliquot Vol:	uL	Test:	VOCMS Group1
GC Column:	RTX-VMS ID : 0.18	Level :	LOW

File ID/Qc Batch:	Dilution:	Prep Date	Date Analyzed	Prep Batch ID
VF053106.D	1		06/21/17 16:26	VF062117

CAS Number	Parameter	Conc.	Qualifier	MDL	LOD	LOQ / CRQL	Units(Dry Weight)
TARGETS							
75-71-8	Dichlorodifluoromethane	0.51	U	0.51	0.51	5.1	ug/Kg
74-87-3	Chloromethane	0.51	U	0.51	0.51	5.1	ug/Kg
75-01-4	Vinyl Chloride	0.51	U	0.51	0.51	5.1	ug/Kg
74-83-9	Bromomethane	1	U	1	1	5.1	ug/Kg
75-00-3	Chloroethane	0.51	U	0.51	0.51	5.1	ug/Kg
75-69-4	Trichlorofluoromethane	0.51	U	0.51	0.51	5.1	ug/Kg
76-13-1	1,1,2-Trichlorotrifluoroethane	0.51	U	0.51	0.51	5.1	ug/Kg
75-65-0	Tert butyl alcohol	25.7	U	7.6	25.7	25.7	ug/Kg
75-35-4	1,1-Dichloroethene	0.51	U	0.51	0.51	5.1	ug/Kg
67-64-1	Acetone	2.6	U	2.6	2.6	25.7	ug/Kg
75-15-0	Carbon Disulfide	0.51	U	0.51	0.51	5.1	ug/Kg
1634-04-4	Methyl tert-butyl Ether	0.51	U	0.51	0.51	5.1	ug/Kg
79-20-9	Methyl Acetate	1	U	1	1	5.1	ug/Kg
75-09-2	Methylene Chloride	3.3	J	0.51	0.51	5.1	ug/Kg
156-60-5	trans-1,2-Dichloroethene	0.51	U	0.51	0.51	5.1	ug/Kg
75-34-3	1,1-Dichloroethane	0.51	U	0.51	0.51	5.1	ug/Kg
110-82-7	Cyclohexane	0.51	U	0.51	0.51	5.1	ug/Kg
78-93-3	2-Butanone	7.7	U	3.2	7.7	25.7	ug/Kg
56-23-5	Carbon Tetrachloride	0.51	U	0.51	0.51	5.1	ug/Kg
156-59-2	cis-1,2-Dichloroethene	0.51	U	0.51	0.51	5.1	ug/Kg
74-97-5	Bromochloromethane	0.51	U	0.51	0.51	5.1	ug/Kg
67-66-3	Chloroform	0.51	U	0.51	0.51	5.1	ug/Kg
71-55-6	1,1,1-Trichloroethane	0.51	U	0.51	0.51	5.1	ug/Kg
108-87-2	Methylcyclohexane	0.51	U	0.51	0.51	5.1	ug/Kg
71-43-2	Benzene	0.51	U	0.39	0.51	5.1	ug/Kg
107-06-2	1,2-Dichloroethane	0.51	U	0.51	0.51	5.1	ug/Kg
79-01-6	Trichloroethene	0.51	U	0.51	0.51	5.1	ug/Kg
78-87-5	1,2-Dichloropropane	0.51	U	0.27	0.51	5.1	ug/Kg
5-27-4	Bromodichloromethane	0.51	U	0.51	0.51	5.1	ug/Kg
108-10-1	4-Methyl-2-Pentanone	2.6	U	2.6	2.6	25.7	ug/Kg
108-88-3	Toluene	0.51	U	0.51	0.51	5.1	ug/Kg
10061-02-6	t-1,3-Dichloropropene	0.51	U	0.51	0.51	5.1	ug/Kg

CHEMTECH 284 Sheffield Street, Mountainside, NJ 07092 Phone: 908 789 8900 Fax: 908 789 8922

Report of Analysis

Client:	LiRo Engineers, Inc.	Date Collected:	06/19/17
Project:	DDC OEGS - Cross Island Pkwy Storm Extension	Date Received:	06/19/17
Client Sample ID:	SB-09-30.5-31.0-DUP	SDG No.:	I3781
Lab Sample ID:	I3781-02	Matrix:	SOIL
Analytical Method:	SW8260	% Moisture:	2.4
Sample Wt/Vol:	4.98 Units: g	Final Vol:	5000 uL
Soil Aliquot Vol:	uL	Test:	VOCMS Group1
GC Column:	RTX-VMS ID : 0.18	Level :	LOW

File ID/Qc Batch:	Dilution:	Prep Date	Date Analyzed	Prep Batch ID
VF053106.D	1		06/21/17 16:26	VF062117

CAS Number	Parameter	Conc.	Qualifier	MDL	LOD	LOQ / CRQL	Units(Dry Weight)
10061-01-5	cis-1,3-Dichloropropene	0.51	U	0.51	0.51	5.1	ug/Kg
79-00-5	1,1,2-Trichloroethane	1	U	0.93	1	5.1	ug/Kg
591-78-6	2-Hexanone	2.6	U	2.6	2.6	25.7	ug/Kg
124-48-1	Dibromochloromethane	0.51	U	0.51	0.51	5.1	ug/Kg
106-93-4	1,2-Dibromoethane	0.51	U	0.51	0.51	5.1	ug/Kg
127-18-4	Tetrachloroethene	0.51	U	0.51	0.51	5.1	ug/Kg
108-90-7	Chlorobenzene	0.51	U	0.51	0.51	5.1	ug/Kg
100-41-4	Ethyl Benzene	0.51	U	0.51	0.51	5.1	ug/Kg
179601-23-1	m/p-Xylenes	1	U	0.74	1	10.3	ug/Kg
95-47-6	o-Xylene	0.51	U	0.51	0.51	5.1	ug/Kg
100-42-5	Styrene	0.51	U	0.46	0.51	5.1	ug/Kg
75-25-2	Bromoform	1.5	U	0.76	1.5	5.1	ug/Kg
98-82-8	Isopropylbenzene	0.51	U	0.49	0.51	5.1	ug/Kg
79-34-5	1,1,2,2-Tetrachloroethane	0.51	U	0.47	0.51	5.1	ug/Kg
541-73-1	1,3-Dichlorobenzene	0.51	U	0.38	0.51	5.1	ug/Kg
106-46-7	1,4-Dichlorobenzene	0.51	U	0.42	0.51	5.1	ug/Kg
95-50-1	1,2-Dichlorobenzene	0.51	U	0.51	0.51	5.1	ug/Kg
96-12-8	1,2-Dibromo-3-Chloropropane	5.1	U	0.89	5.1	5.1	ug/Kg
120-82-1	1,2,4-Trichlorobenzene	0.51	U	0.51	0.51	5.1	ug/Kg
87-61-6	1,2,3-Trichlorobenzene	1	U	0.51	1	5.1	ug/Kg
SURROGATES							
17060-07-0	1,2-Dichloroethane-d4	39.4		56 - 120		79%	SPK: 50
1868-53-7	Dibromofluoromethane	47.8		57 - 135		96%	SPK: 50
2037-26-5	Toluene-d8	47.4		67 - 123		95%	SPK: 50
460-00-4	4-Bromofluorobenzene	46.4		33 - 141		93%	SPK: 50
INTERNAL STANDARDS							
363-72-4	Pentafluorobenzene	358673	4.81				
540-36-3	1,4-Difluorobenzene	646630	5.54				
3114-55-4	Chlorobenzene-d5	602738	9.7				
3855-82-1	1,4-Dichlorobenzene-d4	271524	12.49				

CHEMTECH 284 Sheffield Street, Mountainside, NJ 07092 Phone: 908 789 8900 Fax: 908 789 8922

Report of Analysis

Client:	LiRo Engineers, Inc.	Date Collected:	06/19/17
Project:	DDC OEGS - Cross Island Pkwy Storm Extension	Date Received:	06/19/17
Client Sample ID:	SB-09-30.5-31.0-DUP	SDG No.:	I3781
Lab Sample ID:	I3781-02	Matrix:	SOIL
Analytical Method:	SW8260	% Moisture:	2.4
Sample Wt/Vol:	4.98 Units: g	Final Vol:	5000 uL
Soil Aliquot Vol:	uL	Test:	VOCMS Group1
GC Column:	RTX-VMS ID : 0.18	Level :	LOW

File ID/Qc Batch:	Dilution:	Prep Date	Date Analyzed	Prep Batch ID
VF053106.D	1		06/21/17 16:26	VF062117

CAS Number	Parameter	Conc.	Qualifier	MDL	LOD	LOQ / CRQL	Units

U = Not Detected
LOQ = Limit of Quantitation
MDL = Method Detection Limit
LOD = Limit of Detection
E = Value Exceeds Calibration Range
Q = indicates LCS control criteria did not meet requirements
M = MS/MSD acceptance criteria did not meet requirements

J = Estimated Value
B = Analyte Found in Associated Method Blank
N = Presumptive Evidence of a Compound
* = Values outside of QC limits
D = Dilution
() = Laboratory InHouse Limit

CHEMTECH 284 Sheffield Street, Mountainside, NJ 07092 Phone: 908 789 8900 Fax: 908 789 8922

Report of Analysis

Client:	LiRo Engineers, Inc.	Date Collected:	06/19/17
Project:	DDC OEGS - Cross Island Pkwy Storm Extension	Date Received:	06/19/17
Client Sample ID:	SB-09-COMP	SDG No.:	I3781
Lab Sample ID:	I3781-03	Matrix:	SOIL
Analytical Method:	8015B DRO	% Moisture:	4.3 Decanted:
Sample Wt/Vol:	30.09 Units: g	Final Vol:	1 mL
Soil Aliquot Vol:	uL	Test:	Diesel Range Organics
Extraction Type:		Injection Volume :	
GPC Factor :	PH :		

File ID/Qc Batch:	Dilution:	Prep Date	Date Analyzed	Prep Batch ID
FD015441.D	1	06/20/17 10:36	06/20/17 21:13	PB99975

CAS Number	Parameter	Conc.	Qualifier	MDL	LOD	LOQ / CRQL	Units(Dry Weight)
TARGETS							
DRO	DRO	5001		868	870	1740	ug/kg
SURROGATES							
16416-32-3	Tetracosane-d50	16.7		37 - 130		83%	SPK: 20

Comments:

U = Not Detected
LOQ = Limit of Quantitation
MDL = Method Detection Limit
LOD = Limit of Detection
E = Value Exceeds Calibration Range
P = Indicates >25% difference for detected concentrations between the two GC columns
Q = indicates LCS control criteria did not meet requirements
M = MS/MSD acceptance criteria did not meet requirements

J = Estimated Value
B = Analyte Found in Associated Method Blank
N = Presumptive Evidence of a Compound
* = Values outside of QC limits
D = Dilution
S = Indicates estimated value where valid five-point calibration was not performed prior to analyte detection in sample.
() = Laboratory InHouse Limit

CHEMTECH 284 Sheffield Street, Mountainside, NJ 07092 Phone: 908 789 8900 Fax: 908 789 8922

Report of Analysis

Client:	LiRo Engineers, Inc.	Date Collected:	06/19/17
Project:	DDC OEGS - Cross Island Pkwy Storm Extension	Date Received:	06/19/17
Client Sample ID:	SB-09-COMP	SDG No.:	I3781
Lab Sample ID:	I3781-03	Matrix:	SOIL
Analytical Method:	8015B GRO	% Moisture:	4.3 Decanted:
Sample Wt/Vol:	4.97 Units: g	Final Vol:	5 mL
Soil Aliquot Vol:	uL	Test:	Gasoline Range Organics
Extraction Type:		Injection Volume :	
GPC Factor :	PH :		

File ID/Qc Batch:	Dilution:	Date Analyzed	Prep Batch ID
FB009682.D	1	06/24/17 15:09	FB062417

CAS Number	Parameter	Conc.	Qualifier	MDL	LOD	LOQ / CRQL	Units(Dry Weight)
TARGETS							
GRO	GRO	23.5	U	13	23.5	47	ug/kg
SURROGATES							
98-08-8	Alpha,Alpha,Alpha-Trifluoroto	16.8		50 - 150		84%	SPK: 20

Comments:

U = Not Detected
LOQ = Limit of Quantitation
MDL = Method Detection Limit
LOD = Limit of Detection
E = Value Exceeds Calibration Range
P = Indicates >25% difference for detected concentrations between the two GC columns
Q = indicates LCS control criteria did not meet requirements
M = MS/MSD acceptance criteria did not meet requirements

J = Estimated Value
B = Analyte Found in Associated Method Blank
N = Presumptive Evidence of a Compound
* = Values outside of QC limits
D = Dilution
S = Indicates estimated value where valid five-point calibration was not performed prior to analyte detection in sample.
() = Laboratory InHouse Limit

CHEMTECH 284 Sheffield Street, Mountainside, NJ 07092 Phone: 908 789 8900 Fax: 908 789 8922

Report of Analysis

Client:	LiRo Engineers, Inc.	Date Collected:	06/19/17 08:35
Project:	DDC OEGS - Cross Island Pkwy Storm Extension	Date Received:	06/19/17
Client Sample ID:	SB-09-COMP	SDG No.:	I3781
Lab Sample ID:	I3781-03	Matrix:	SOIL
		% Solid:	95.7

Parameter	Conc.	Qua.	DF	MDL	LOD	LOQ / CRQL	Units	Prep Date	Date Ana.	Ana Met.
Paint Filter	1	U	1	1	1	1	ml/100gm		06/20/17 11:10	9095A

Comments:

U = Not Detected
LOQ = Limit of Quantitation
MDL = Method Detection Limit
LOD = Limit of Detection
D = Dilution
Q = indicates LCS control criteria did not meet requirements
H = Sample Analysis Out Of Hold Time

J = Estimated Value
B = Analyte Found in Associated Method Blank
* = indicates the duplicate analysis is not within control limits.
E = Indicates the reported value is estimated because of the presence of interference.
OR = Over Range
N =Spiked sample recovery not within control limits

CHEMTECH 284 Sheffield Street, Mountainside, NJ 07092 Phone: 908 789 8900 Fax: 908 789 8922

Report of Analysis

Client:	LiRo Engineers, Inc.	Date Collected:	06/19/17
Project:	DDC OEGS - Cross Island Pkwy Storm Extension	Date Received:	06/19/17
Client Sample ID:	SB-01-14.5-15.0	SDG No.:	I3781
Lab Sample ID:	I3781-04	Matrix:	SOIL
Level (low/med):	low	% Solid:	90.8

Cas	Parameter	Conc.	Qua.	DF	MDL	LOD	LOQ / CRQL	Units(Dry Weight)	Prep Date	Date Ana.	Ana Met.
7429-90-5	Aluminum	1820		1	0.758	1.13	4.51	mg/Kg	06/20/17 09:32	06/21/17 17:01	SW6010
7440-36-0	Antimony	0.564	UN	1	0.506	0.564	2.26	mg/Kg	06/20/17 09:32	06/21/17 17:01	SW6010
7440-38-2	Arsenic	1.13		1	0.226	0.226	0.903	mg/Kg	06/20/17 09:32	06/21/17 17:01	SW6010
7440-39-3	Barium	11.8		1	0.361	1.13	4.51	mg/Kg	06/20/17 09:32	06/21/17 17:01	SW6010
7440-41-7	Beryllium	0.08	J	1	0.054	0.068	0.271	mg/Kg	06/20/17 09:32	06/21/17 17:01	SW6010
7440-43-9	Cadmium	0.068	U	1	0.054	0.068	0.271	mg/Kg	06/20/17 09:32	06/21/17 17:01	SW6010
7440-70-2	Calcium	356		1	0.966	22.6	90.3	mg/Kg	06/20/17 09:32	06/21/17 17:01	SW6010
7440-47-3	Chromium	5.94		1	0.113	0.113	0.451	mg/Kg	06/20/17 09:32	06/21/17 17:01	SW6010
7440-48-4	Cobalt	2.76		1	0.339	0.339	1.35	mg/Kg	06/20/17 09:32	06/21/17 17:01	SW6010
7440-50-8	Copper	7.42		1	0.226	0.226	0.903	mg/Kg	06/20/17 09:32	06/21/17 17:01	SW6010
7439-89-6	Iron	7910		1	1.13	1.13	4.51	mg/Kg	06/20/17 09:32	06/21/17 17:01	SW6010
7439-92-1	Lead	10.2	N	1	0.108	0.226	0.542	mg/Kg	06/20/17 09:32	06/21/17 17:01	SW6010
7439-95-4	Magnesium	587		1	4.13	22.6	90.3	mg/Kg	06/20/17 09:32	06/21/17 17:01	SW6010
7439-96-5	Manganese	187		1	0.172	0.226	0.903	mg/Kg	06/20/17 09:32	06/21/17 17:01	SW6010
7439-97-6	Mercury	0.007	U	1	0.007	0.007	0.014	mg/Kg	06/20/17 18:43	06/21/17 18:32	SW7471A
7440-02-0	Nickel	15.6		1	0.415	0.451	1.81	mg/Kg	06/20/17 09:32	06/21/17 17:01	SW6010
7440-09-7	Potassium	216		1	3.16	22.6	90.3	mg/Kg	06/20/17 09:32	06/21/17 17:01	SW6010
7782-49-2	Selenium	2.69		1	0.226	0.226	0.903	mg/Kg	06/20/17 09:32	06/21/17 17:01	SW6010
7440-22-4	Silver	0.481		1	0.113	0.113	0.451	mg/Kg	06/20/17 09:32	06/21/17 17:01	SW6010
7440-23-5	Sodium	70	JN	1	2.27	22.6	90.3	mg/Kg	06/20/17 09:32	06/21/17 17:01	SW6010
7440-28-0	Thallium	0.451	U	1	0.244	0.451	1.81	mg/Kg	06/20/17 09:32	06/21/17 17:01	SW6010
7440-62-2	Vanadium	5.66		1	0.451	0.451	1.81	mg/Kg	06/20/17 09:32	06/21/17 17:01	SW6010
7440-66-6	Zinc	9.63		1	0.451	0.451	1.81	mg/Kg	06/20/17 09:32	06/21/17 17:01	SW6010

Color Before:	Brown	Clarity Before:		Texture:	Medium
Color After:	Yellow	Clarity After:		Artifacts:	No
Comments:	METALS-TAL				

U = Not Detected
LOQ = Limit of Quantitation
MDL = Method Detection Limit
LOD = Limit of Detection
D = Dilution
Q = indicates LCS control criteria did not meet requirements

J = Estimated Value
B = Analyte Found in Associated Method Blank
* = indicates the duplicate analysis is not within control limits.
E = Indicates the reported value is estimated because of the presence of interference.
OR = Over Range
N =Spiked sample recovery not within control limits

CHEMTECH 284 Sheffield Street, Mountainside, NJ 07092 Phone: 908 789 8900 Fax: 908 789 8922

Report of Analysis

Client:	LiRo Engineers, Inc.	Date Collected:	06/19/17
Project:	DDC OEGS - Cross Island Pkwy Storm Extension	Date Received:	06/19/17
Client Sample ID:	SB-01-14.5-15.0	SDG No.:	I3781
Lab Sample ID:	I3781-04	Matrix:	SOIL
Analytical Method:	SW8082A	% Moisture:	9.2 Decanted:
Sample Wt/Vol:	30.05 Units: g	Final Vol:	10000 uL
Soil Aliquot Vol:	uL	Test:	PCB
Extraction Type:		Injection Volume :	
GPC Factor :	1.0 PH :		

File ID/Qc Batch:	Dilution:	Prep Date	Date Analyzed	Prep Batch ID
PQ018763.D	1	06/20/17 08:09	06/21/17 17:55	PB99931

CAS Number	Parameter	Conc.	Qualifier	MDL	LOD	LOQ / CRQL	Units(Dry Weight)
TARGETS							
12674-11-2	Aroclor-1016	3.7	U	3.7	3.7	18.7	ug/kg
11104-28-2	Aroclor-1221	3.7	U	3.7	3.7	18.7	ug/kg
11141-16-5	Aroclor-1232	3.7	U	3.7	3.7	18.7	ug/kg
53469-21-9	Aroclor-1242	3.7	U	3.7	3.7	18.7	ug/kg
12672-29-6	Aroclor-1248	3.7	U	3.7	3.7	18.7	ug/kg
11097-69-1	Aroclor-1254	3.7	U	1.6	3.7	18.7	ug/kg
37324-23-5	Aroclor-1262	3.7	U	3.7	3.7	18.7	ug/kg
11100-14-4	Aroclor-1268	3.7	U	3.7	3.7	18.7	ug/kg
11096-82-5	Aroclor-1260	3.7	U	3.7	3.7	18.7	ug/kg
SURROGATES							
877-09-8	Tetrachloro-m-xylene	15.8		10 - 166		79%	SPK: 20
2051-24-3	Decachlorobiphenyl	14.8		60 - 125		74%	SPK: 20

Comments:

U = Not Detected
LOQ = Limit of Quantitation
MDL = Method Detection Limit
LOD = Limit of Detection
E = Value Exceeds Calibration Range
P = Indicates >25% difference for detected concentrations between the two GC columns
Q = indicates LCS control criteria did not meet requirements
M = MS/MSD acceptance criteria did not meet requirements

J = Estimated Value
B = Analyte Found in Associated Method Blank
N = Presumptive Evidence of a Compound
* = Values outside of QC limits
D = Dilution
S = Indicates estimated value where valid five-point calibration was not performed prior to analyte detection in sample.
() = Laboratory InHouse Limit

CHEMTECH 284 Sheffield Street, Mountainside, NJ 07092 Phone: 908 789 8900 Fax: 908 789 8922

Report of Analysis

Client:	LiRo Engineers, Inc.	Date Collected:	06/19/17
Project:	DDC OEGS - Cross Island Pkwy Storm Extension	Date Received:	06/19/17
Client Sample ID:	SB-01-14.5-15.0	SDG No.:	I3781
Lab Sample ID:	I3781-04	Matrix:	SOIL
Analytical Method:	SW8081	% Moisture:	9.2 Decanted:
Sample Wt/Vol:	30.05 Units: g	Final Vol:	10000 uL
Soil Aliquot Vol:	uL	Test:	PESTICIDE Group1
Extraction Type:		Injection Volume	
GPC Factor :	1.0 PH :		

File ID/Qc Batch:	Dilution:	Prep Date	Date Analyzed	Prep Batch ID
PL026252.D	1	06/20/17 08:11	06/20/17 20:17	PB99929

CAS Number	Parameter	Conc.	Qualifier	MDL	LOD	LOQ / CRQL	Units(Dry Weight)
TARGETS							
319-84-6	alpha-BHC	0.363	U	0.143	0.363	1.9	ug/kg
319-85-7	beta-BHC	0.363	U	0.198	0.363	1.9	ug/kg
319-86-8	delta-BHC	0.363	U	0.11	0.363	1.9	ug/kg
58-89-9	gamma-BHC (Lindane)	0.363	U	0.165	0.363	1.9	ug/kg
76-44-8	Heptachlor	0.363	U	0.154	0.363	1.9	ug/kg
309-00-2	Aldrin	0.363	U	0.11	0.363	1.9	ug/kg
1024-57-3	Heptachlor epoxide	0.363	U	0.176	0.363	1.9	ug/kg
959-98-8	Endosulfan I	0.363	U	0.165	0.363	1.9	ug/kg
60-57-1	Dieldrin	0.363	U	0.143	0.363	1.9	ug/kg
72-55-9	4,4-DDE	0.363	U	0.22	0.363	1.9	ug/kg
72-20-8	Endrin	0.363	U	0.198	0.363	1.9	ug/kg
33213-65-9	Endosulfan II	0.363	U	0.154	0.363	1.9	ug/kg
72-54-8	4,4-DDD	0.363	U	0.187	0.363	1.9	ug/kg
1031-07-8	Endosulfan Sulfate	0.363	U	0.165	0.363	1.9	ug/kg
50-29-3	4,4-DDT	0.363	U	0.154	0.363	1.9	ug/kg
72-43-5	Methoxychlor	0.363	U	0.187	0.363	1.9	ug/kg
53494-70-5	Endrin ketone	0.363	U	0.143	0.363	1.9	ug/kg
7421-93-4	Endrin aldehyde	0.363	U	0.165	0.363	1.9	ug/kg
5103-71-9	alpha-Chlordane	0.363	U	0.154	0.363	1.9	ug/kg
5103-74-2	gamma-Chlordane	0.363	U	0.143	0.363	1.9	ug/kg
8001-35-2	Toxaphene	3.7	U	3.7	3.7	18.7	ug/kg
SURROGATES							
2051-24-3	Decachlorobiphenyl	23		10 - 169		115%	SPK: 20
877-09-8	Tetrachloro-m-xylene	19.2		31 - 151		96%	SPK: 20

CHEMTECH 284 Sheffield Street, Mountainside, NJ 07092 Phone: 908 789 8900 Fax: 908 789 8922

Report of Analysis

Client:	LiRo Engineers, Inc.	Date Collected:	06/19/17
Project:	DDC OEGS - Cross Island Pkwy Storm Extension	Date Received:	06/19/17
Client Sample ID:	SB-01-14.5-15.0	SDG No.:	I3781
Lab Sample ID:	I3781-04	Matrix:	SOIL
Analytical Method:	SW8081	% Moisture:	9.2 Decanted:
Sample Wt/Vol:	30.05 Units: g	Final Vol:	10000 uL
Soil Aliquot Vol:	uL	Test:	PESTICIDE Group1
Extraction Type:		Injection Volume	
GPC Factor :	1.0 PH :		

File ID/Qc Batch:	Dilution:	Prep Date	Date Analyzed	Prep Batch ID
PL026252.D	1	06/20/17 08:11	06/20/17 20:17	PB99929

CAS Number	Parameter	Conc.	Qualifier	MDL	LOD	LOQ / CRQL	Units

Comments:

U = Not Detected
LOQ = Limit of Quantitation
MDL = Method Detection Limit
LOD = Limit of Detection
E = Value Exceeds Calibration Range
P = Indicates >25% difference for detected concentrations between the two GC columns
Q = indicates LCS control criteria did not meet requirements
M = MS/MSD acceptance criteria did not meet requirements

J = Estimated Value
B = Analyte Found in Associated Method Blank
N = Presumptive Evidence of a Compound
* = Values outside of QC limits
D = Dilution
S = Indicates estimated value where valid five-point calibration was not performed prior to analyte detection in sample.
() = Laboratory InHouse Limit

CHEMTECH 284 Sheffield Street, Mountainside, NJ 07092 Phone: 908 789 8900 Fax: 908 789 8922

Report of Analysis

Client:	LiRo Engineers, Inc.	Date Collected:	06/19/17
Project:	DDC OEGS - Cross Island Pkwy Storm Extension	Date Received:	06/19/17
Client Sample ID:	SB-01-14.5-15.0	SDG No.:	I3781
Lab Sample ID:	I3781-04	Matrix:	SOIL
Analytical Method:	SW8270	% Moisture:	9.2
Sample Wt/Vol:	30.07 Units: g	Final Vol:	1000 uL
Soil Aliquot Vol:	uL	Test:	SVOCMS Group1
Extraction Type :	Decanted : N	Level :	LOW
Injection Volume :	GPC Factor : 1.0	GPC Cleanup :	N PH :

File ID/Qc Batch:	Dilution:	Prep Date	Date Analyzed	Prep Batch ID
BG027649.D	1	06/20/17 08:53	06/24/17 03:09	PB99928

CAS Number	Parameter	Conc.	Qualifier	MDL	LOD	LOQ / CRQL	Units(Dry Weight)
TARGETS							
100-52-7	Benzaldehyde	36.6	U	19.1	36.6	360	ug/Kg
108-95-2	Phenol	100	J	8.5	36.6	360	ug/Kg
111-44-4	bis(2-Chloroethyl)ether	36.6	U	17.6	36.6	360	ug/Kg
95-57-8	2-Chlorophenol	36.6	U	19.3	36.6	360	ug/Kg
95-48-7	2-Methylphenol	36.6	U	19.9	36.6	360	ug/Kg
108-60-1	2,2-oxybis(1-Chloropropane)	36.6	U	15.2	36.6	360	ug/Kg
98-86-2	Acetophenone	36.6	U	11.2	36.6	360	ug/Kg
65794-96-9	3+4-Methylphenols	36.6	U	19	36.6	360	ug/Kg
621-64-7	n-Nitroso-di-n-propylamine	36.6	U	18.5	36.6	360	ug/Kg
67-72-1	Hexachloroethane	36.6	U	16.4	36.6	360	ug/Kg
98-95-3	Nitrobenzene	36.6	U	13.8	36.6	360	ug/Kg
78-59-1	Isophorone	36.6	U	12.1	36.6	360	ug/Kg
88-75-5	2-Nitrophenol	36.6	U	17.7	36.6	360	ug/Kg
105-67-9	2,4-Dimethylphenol	36.6	U	20.8	36.6	360	ug/Kg
111-91-1	bis(2-Chloroethoxy)methane	36.6	U	21.1	36.6	360	ug/Kg
120-83-2	2,4-Dichlorophenol	36.6	U	14	36.6	360	ug/Kg
91-20-3	Naphthalene	36.6	U	12.6	36.6	360	ug/Kg
106-47-8	4-Chloroaniline	36.6	U	25.8	36.6	360	ug/Kg
87-68-3	Hexachlorobutadiene	36.6	U	13.3	36.6	360	ug/Kg
105-60-2	Caprolactam	73.3	U	17	73.3	360	ug/Kg
59-50-7	4-Chloro-3-methylphenol	36.6	U	16.3	36.6	360	ug/Kg
91-57-6	2-Methylnaphthalene	36.6	U	9.2	36.6	360	ug/Kg
77-47-4	Hexachlorocyclopentadiene	36.6	U	8.9	36.6	360	ug/Kg
88-06-2	2,4,6-Trichlorophenol	36.6	U	11.2	36.6	360	ug/Kg
95-95-4	2,4,5-Trichlorophenol	36.6	U	25.7	36.6	360	ug/Kg
92-52-4	1,1-Biphenyl	36.6	U	13.8	36.6	360	ug/Kg
91-58-7	2-Chloronaphthalene	36.6	U	8.4	36.6	360	ug/Kg
88-74-4	2-Nitroaniline	36.6	U	16.3	36.6	360	ug/Kg
131-11-3	Dimethylphthalate	580		9.9	36.6	360	ug/Kg
208-96-8	Acenaphthylene	36.6	U	9.2	36.6	360	ug/Kg
606-20-2	2,6-Dinitrotoluene	36.6	U	14.9	36.6	360	ug/Kg

CHEMTECH 284 Sheffield Street, Mountainside, NJ 07092 Phone: 908 789 8900 Fax: 908 789 8922

Report of Analysis

Client:	LiRo Engineers, Inc.	Date Collected:	06/19/17
Project:	DDC OEGS - Cross Island Pkwy Storm Extension	Date Received:	06/19/17
Client Sample ID:	SB-01-14.5-15.0	SDG No.:	I3781
Lab Sample ID:	I3781-04	Matrix:	SOIL
Analytical Method:	SW8270	% Moisture:	9.2
Sample Wt/Vol:	30.07 Units: g	Final Vol:	1000 uL
Soil Aliquot Vol:	uL	Test:	SVOCMS Group1
Extraction Type :	Decanted : N	Level :	LOW
Injection Volume :	GPC Factor : 1.0	GPC Cleanup :	N PH :

File ID/Qc Batch:	Dilution:	Prep Date	Date Analyzed	Prep Batch ID
BG027649.D	1	06/20/17 08:53	06/24/17 03:09	PB99928

CAS Number	Parameter	Conc.	Qualifier	MDL	LOD	LOQ / CRQL	Units(Dry Weight)
99-09-2	3-Nitroaniline	73.3	U	23.5	73.3	360	ug/Kg
83-32-9	Acenaphthene	36.6	U	10.3	36.6	360	ug/Kg
51-28-5	2,4-Dinitrophenol	290	U	37.2	290	360	ug/Kg
100-02-7	4-Nitrophenol	180	U	68	180	360	ug/Kg
132-64-9	Dibenzofuran	36.6	U	14.3	36.6	360	ug/Kg
121-14-2	2,4-Dinitrotoluene	36.6	U	11	36.6	360	ug/Kg
84-66-2	Diethylphthalate	36.6	U	5.7	36.6	360	ug/Kg
7005-72-3	4-Chlorophenyl-phenylether	36.6	U	19.9	36.6	360	ug/Kg
86-73-7	Fluorene	36.6	U	13.8	36.6	360	ug/Kg
100-01-6	4-Nitroaniline	73.3	U	47.7	73.3	360	ug/Kg
534-52-1	4,6-Dinitro-2-methylphenol	180	U	21	180	360	ug/Kg
86-30-6	n-Nitrosodiphenylamine	36.6	U	8.8	36.6	360	ug/Kg
101-55-3	4-Bromophenyl-phenylether	36.6	U	7.1	36.6	360	ug/Kg
118-74-1	Hexachlorobenzene	36.6	U	14.9	36.6	360	ug/Kg
1912-24-9	Atrazine	36.6	U	19.3	36.6	360	ug/Kg
87-86-5	Pentachlorophenol	36.6	U	25.1	36.6	360	ug/Kg
85-01-8	Phenanthrene	36.6	U	9.9	36.6	360	ug/Kg
120-12-7	Anthracene	36.6	U	7.5	36.6	360	ug/Kg
86-74-8	Carbazole	36.6	U	8	36.6	360	ug/Kg
84-74-2	Di-n-butylphthalate	36.6	U	28.8	36.6	360	ug/Kg
206-44-0	Fluoranthene	36.6	U	7.4	36.6	360	ug/Kg
129-00-0	Pyrene	36.6	U	8.8	36.6	360	ug/Kg
85-68-7	Butylbenzylphthalate	36.6	U	17.6	36.6	360	ug/Kg
91-94-1	3,3-Dichlorobenzidine	36.6	U	23.5	36.6	360	ug/Kg
56-55-3	Benzo(a)anthracene	36.6	U	17.5	36.6	360	ug/Kg
218-01-9	Chrysene	36.6	U	16.6	36.6	360	ug/Kg
117-81-7	Bis(2-ethylhexyl)phthalate	36.6	U	13	36.6	360	ug/Kg
117-84-0	Di-n-octyl phthalate	36.6	U	4.2	36.6	360	ug/Kg
205-99-2	Benzo(b)fluoranthene	36.6	U	12	36.6	360	ug/Kg
207-08-9	Benzo(k)fluoranthene	36.6	U	17.3	36.6	360	ug/Kg
50-32-8	Benzo(a)pyrene	36.6	U	7.9	36.6	360	ug/Kg
193-39-5	Indeno(1,2,3-cd)pyrene	36.6	U	12.2	36.6	360	ug/Kg
53-70-3	Dibenzo(a,h)anthracene	36.6	U	10.5	36.6	360	ug/Kg

CHEMTECH 284 Sheffield Street, Mountainside, NJ 07092 Phone: 908 789 8900 Fax: 908 789 8922

Report of Analysis

Client:	LiRo Engineers, Inc.	Date Collected:	06/19/17
Project:	DDC OEGS - Cross Island Pkwy Storm Extension	Date Received:	06/19/17
Client Sample ID:	SB-01-14.5-15.0	SDG No.:	I3781
Lab Sample ID:	I3781-04	Matrix:	SOIL
Analytical Method:	SW8270	% Moisture:	9.2
Sample Wt/Vol:	30.07 Units: g	Final Vol:	1000 uL
Soil Aliquot Vol:	uL	Test:	SVOCMS Group1
Extraction Type :	Decanted : N	Level :	LOW
Injection Volume :	GPC Factor : 1.0	GPC Cleanup :	N PH :

File ID/Qc Batch:	Dilution:	Prep Date	Date Analyzed	Prep Batch ID
BG027649.D	1	06/20/17 08:53	06/24/17 03:09	PB99928

CAS Number	Parameter	Conc.	Qualifier	MDL	LOD	LOQ / CRQL	Units(Dry Weight)
191-24-2	Benzo(g,h,i)perylene	36.6	U	14.8	36.6	360	ug/Kg
95-94-3	1,2,4,5-Tetrachlorobenzene	36.6	U	14.4	36.6	360	ug/Kg
123-91-1	1,4-Dioxane	73.3	U	14.4	73.3	360	ug/Kg
58-90-2	2,3,4,6-Tetrachlorophenol	36.6	U	14.4	36.6	360	ug/Kg
SURROGATES							
367-12-4	2-Fluorophenol	160		28 - 127		108%	SPK: 150
13127-88-3	Phenol-d6	150		34 - 127		102%	SPK: 150
4165-60-0	Nitrobenzene-d5	98.3		31 - 132		98%	SPK: 100
321-60-8	2-Fluorobiphenyl	100		39 - 123		103%	SPK: 100
118-79-6	2,4,6-Tribromophenol	200		30 - 133		130%	SPK: 150
1718-51-0	Terphenyl-d14	110		37 - 115		111%	SPK: 100

INTERNAL STANDARDS

3855-82-1	1,4-Dichlorobenzene-d4	16262	8.51
1146-65-2	Naphthalene-d8	79027	11.32
15067-26-2	Acenaphthene-d10	52632	15.09
1517-22-2	Phenanthrene-d10	154123	17.84
1719-03-5	Chrysene-d12	170434	22.21
1520-96-3	Perylene-d12	164846	25.84

U = Not Detected
LOQ = Limit of Quantitation
MDL = Method Detection Limit
LOD = Limit of Detection
E = Value Exceeds Calibration Range
Q = indicates LCS control criteria did not meet requirements
M = MS/MSD acceptance criteria did not meet requirements

J = Estimated Value
B = Analyte Found in Associated Method Blank
N = Presumptive Evidence of a Compound
* = Values outside of QC limits
D = Dilution
() = Laboratory InHouse Limit

CHEMTECH 284 Sheffield Street, Mountainside, NJ 07092 Phone: 908 789 8900 Fax: 908 789 8922

Report of Analysis

Client:	LiRo Engineers, Inc.	Date Collected:	06/19/17
Project:	DDC OEGS - Cross Island Pkwy Storm Extension	Date Received:	06/19/17
Client Sample ID:	SB-01-14.5-15.0	SDG No.:	I3781
Lab Sample ID:	I3781-04	Matrix:	SOIL
Analytical Method:	SW8260	% Moisture:	9.2
Sample Wt/Vol:	5 Units: g	Final Vol:	5000 uL
Soil Aliquot Vol:	uL	Test:	VOCMS Group1
GC Column:	RTX-VMS ID : 0.18	Level :	LOW

File ID/Qc Batch:	Dilution:	Prep Date	Date Analyzed	Prep Batch ID
VF053107.D	1		06/21/17 16:55	VF062117

CAS Number	Parameter	Conc.	Qualifier	MDL	LOD	LOQ / CRQL	Units(Dry Weight)
TARGETS							
75-71-8	Dichlorodifluoromethane	0.55	U	0.55	0.55	5.5	ug/Kg
74-87-3	Chloromethane	0.55	U	0.55	0.55	5.5	ug/Kg
75-01-4	Vinyl Chloride	0.55	U	0.55	0.55	5.5	ug/Kg
74-83-9	Bromomethane	1.1	U	1.1	1.1	5.5	ug/Kg
75-00-3	Chloroethane	0.55	U	0.55	0.55	5.5	ug/Kg
75-69-4	Trichlorofluoromethane	0.55	U	0.55	0.55	5.5	ug/Kg
76-13-1	1,1,2-Trichlorotrifluoroethane	0.55	U	0.55	0.55	5.5	ug/Kg
75-65-0	Tert butyl alcohol	27.5	U	8.2	27.5	27.5	ug/Kg
75-35-4	1,1-Dichloroethene	0.55	U	0.55	0.55	5.5	ug/Kg
67-64-1	Acetone	2.8	U	2.8	2.8	27.5	ug/Kg
75-15-0	Carbon Disulfide	0.55	U	0.55	0.55	5.5	ug/Kg
1634-04-4	Methyl tert-butyl Ether	0.55	U	0.55	0.55	5.5	ug/Kg
79-20-9	Methyl Acetate	1.1	U	1.1	1.1	5.5	ug/Kg
75-09-2	Methylene Chloride	4.2	J	0.55	0.55	5.5	ug/Kg
156-60-5	trans-1,2-Dichloroethene	0.55	U	0.55	0.55	5.5	ug/Kg
75-34-3	1,1-Dichloroethane	0.55	U	0.55	0.55	5.5	ug/Kg
110-82-7	Cyclohexane	0.55	U	0.55	0.55	5.5	ug/Kg
78-93-3	2-Butanone	8.3	U	3.4	8.3	27.5	ug/Kg
56-23-5	Carbon Tetrachloride	0.55	U	0.55	0.55	5.5	ug/Kg
156-59-2	cis-1,2-Dichloroethene	0.55	U	0.55	0.55	5.5	ug/Kg
74-97-5	Bromochloromethane	0.55	U	0.55	0.55	5.5	ug/Kg
67-66-3	Chloroform	0.55	U	0.55	0.55	5.5	ug/Kg
71-55-6	1,1,1-Trichloroethane	0.55	U	0.55	0.55	5.5	ug/Kg
108-87-2	Methylcyclohexane	0.55	U	0.55	0.55	5.5	ug/Kg
71-43-2	Benzene	0.55	U	0.42	0.55	5.5	ug/Kg
107-06-2	1,2-Dichloroethane	0.55	U	0.55	0.55	5.5	ug/Kg
79-01-6	Trichloroethene	0.55	U	0.55	0.55	5.5	ug/Kg
78-87-5	1,2-Dichloropropane	0.55	U	0.29	0.55	5.5	ug/Kg
75-27-4	Bromodichloromethane	0.55	U	0.55	0.55	5.5	ug/Kg
108-10-1	4-Methyl-2-Pentanone	2.8	U	2.8	2.8	27.5	ug/Kg
108-88-3	Toluene	0.55	U	0.55	0.55	5.5	ug/Kg
10061-02-6	t-1,3-Dichloropropene	0.55	U	0.55	0.55	5.5	ug/Kg

CHEMTECH 284 Sheffield Street, Mountainside, NJ 07092 Phone: 908 789 8900 Fax: 908 789 8922

Report of Analysis

Client:	LiRo Engineers, Inc.	Date Collected:	06/19/17
Project:	DDC OEGS - Cross Island Pkwy Storm Extension	Date Received:	06/19/17
Client Sample ID:	SB-01-14.5-15.0	SDG No.:	I3781
Lab Sample ID:	I3781-04	Matrix:	SOIL
Analytical Method:	SW8260	% Moisture:	9.2
Sample Wt/Vol:	5 Units: g	Final Vol:	5000 uL
Soil Aliquot Vol:	uL	Test:	VOCMS Group1
GC Column:	RTX-VMS ID : 0.18	Level :	LOW

File ID/Qc Batch:	Dilution:	Prep Date	Date Analyzed	Prep Batch ID
VF053107.D	1		06/21/17 16:55	VF062117

CAS Number	Parameter	Conc.	Qualifier	MDL	LOD	LOQ / CRQL	Units(Dry Weight)
10061-01-5	cis-1,3-Dichloropropene	0.55	U	0.55	0.55	5.5	ug/Kg
79-00-5	1,1,2-Trichloroethane	1.1	U	0.99	1.1	5.5	ug/Kg
591-78-6	2-Hexanone	2.8	U	2.8	2.8	27.5	ug/Kg
124-48-1	Dibromochloromethane	0.55	U	0.55	0.55	5.5	ug/Kg
106-93-4	1,2-Dibromoethane	0.55	U	0.55	0.55	5.5	ug/Kg
127-18-4	Tetrachloroethene	0.55	U	0.55	0.55	5.5	ug/Kg
108-90-7	Chlorobenzene	0.55	U	0.55	0.55	5.5	ug/Kg
100-41-4	Ethyl Benzene	0.55	U	0.55	0.55	5.5	ug/Kg
179601-23-1	m/p-Xylenes	1.1	U	0.79	1.1	11	ug/Kg
95-47-6	o-Xylene	0.55	U	0.55	0.55	5.5	ug/Kg
100-42-5	Styrene	0.55	U	0.5	0.55	5.5	ug/Kg
75-25-2	Bromoform	1.7	U	0.81	1.7	5.5	ug/Kg
98-82-8	Isopropylbenzene	0.55	U	0.53	0.55	5.5	ug/Kg
79-34-5	1,1,2,2-Tetrachloroethane	0.55	U	0.51	0.55	5.5	ug/Kg
541-73-1	1,3-Dichlorobenzene	0.55	U	0.41	0.55	5.5	ug/Kg
106-46-7	1,4-Dichlorobenzene	0.55	U	0.45	0.55	5.5	ug/Kg
95-50-1	1,2-Dichlorobenzene	0.55	U	0.55	0.55	5.5	ug/Kg
96-12-8	1,2-Dibromo-3-Chloropropane	5.5	U	0.96	5.5	5.5	ug/Kg
120-82-1	1,2,4-Trichlorobenzene	0.55	U	0.55	0.55	5.5	ug/Kg
87-61-6	1,2,3-Trichlorobenzene	1.1	U	0.55	1.1	5.5	ug/Kg
SURROGATES							
17060-07-0	1,2-Dichloroethane-d4	43.3		56 - 120		87%	SPK: 50
1868-53-7	Dibromofluoromethane	47.1		57 - 135		94%	SPK: 50
2037-26-5	Toluene-d8	44.6		67 - 123		89%	SPK: 50
460-00-4	4-Bromofluorobenzene	44.2		33 - 141		88%	SPK: 50
INTERNAL STANDARDS							
363-72-4	Pentafluorobenzene	329772	4.82				
540-36-3	1,4-Difluorobenzene	620203	5.55				
3114-55-4	Chlorobenzene-d5	544800	9.71				
855-82-1	1,4-Dichlorobenzene-d4	253707	12.5				

CHEMTECH 284 Sheffield Street, Mountainside, NJ 07092 Phone: 908 789 8900 Fax: 908 789 8922

Report of Analysis

Client:	LiRo Engineers, Inc.	Date Collected:	06/19/17
Project:	DDC OEGS - Cross Island Pkwy Storm Extension	Date Received:	06/19/17
Client Sample ID:	SB-01-14.5-15.0	SDG No.:	I3781
Lab Sample ID:	I3781-04	Matrix:	SOIL
Analytical Method:	SW8260	% Moisture:	9.2
Sample Wt/Vol:	5 Units: g	Final Vol:	5000 uL
Soil Aliquot Vol:	uL	Test:	VOCMS Group1
GC Column:	RTX-VMS ID : 0.18	Level :	LOW

File ID/Qc Batch:	Dilution:	Prep Date	Date Analyzed	Prep Batch ID
VF053107.D	1		06/21/17 16:55	VF062117

CAS Number	Parameter	Conc.	Qualifier	MDL	LOD	LOQ / CRQL	Units

U = Not Detected
LOQ = Limit of Quantitation
MDL = Method Detection Limit
LOD = Limit of Detection
E = Value Exceeds Calibration Range
Q = indicates LCS control criteria did not meet requirements
M = MS/MSD acceptance criteria did not meet requirements

J = Estimated Value
B = Analyte Found in Associated Method Blank
N = Presumptive Evidence of a Compound
* = Values outside of QC limits
D = Dilution
() = Laboratory InHouse Limit

CHEMTECH 284 Sheffield Street, Mountainside, NJ 07092 Phone: 908 789 8900 Fax: 908 789 8922

Report of Analysis

Client:	LiRo Engineers, Inc.	Date Collected:	06/19/17
Project:	DDC OEGS - Cross Island Pkwy Storm Extension	Date Received:	06/19/17
Client Sample ID:	SB-01-COMP	SDG No.:	I3781
Lab Sample ID:	I3781-05	Matrix:	SOIL
Analytical Method:	8015B DRO	% Moisture:	5.4 Decanted:
Sample Wt/Vol:	30.03 Units: g	Final Vol:	1 mL
Soil Aliquot Vol:	uL	Test:	Diesel Range Organics
Extraction Type:		Injection Volume :	
GPC Factor :	PH :		

File ID/Qc Batch:	Dilution:	Prep Date	Date Analyzed	Prep Batch ID
FD015440.D	1	06/20/17 10:36	06/20/17 20:36	PB99975

CAS Number	Parameter	Conc.	Qualifier	MDL	LOD	LOQ / CRQL	Units(Dry Weight)
TARGETS							
DRO	DRO	4048		880	880	1760	ug/kg
SURROGATES							
16416-32-3	Tetracosane-d50	14.1		37 - 130		71%	SPK: 20

Comments:

U = Not Detected
LOQ = Limit of Quantitation
MDL = Method Detection Limit
LOD = Limit of Detection
E = Value Exceeds Calibration Range
P = Indicates >25% difference for detected concentrations between the two GC columns
Q = indicates LCS control criteria did not meet requirements
M = MS/MSD acceptance criteria did not meet requirements

J = Estimated Value
B = Analyte Found in Associated Method Blank
N = Presumptive Evidence of a Compound
* = Values outside of QC limits
D = Dilution
S = Indicates estimated value where valid five-point calibration was not performed prior to analyte detection in sample.
() = Laboratory InHouse Limit

CHEMTECH 284 Sheffield Street, Mountainside, NJ 07092 Phone: 908 789 8900 Fax: 908 789 8922

Report of Analysis

Client:	LiRo Engineers, Inc.	Date Collected:	06/19/17
Project:	DDC OEGS - Cross Island Pkwy Storm Extension	Date Received:	06/19/17
Client Sample ID:	SB-01-COMP	SDG No.:	I3781
Lab Sample ID:	I3781-05	Matrix:	SOIL
Analytical Method:	8015B GRO	% Moisture:	5.4 Decanted:
Sample Wt/Vol:	5.01 Units: g	Final Vol:	5 mL
Soil Aliquot Vol:	uL	Test:	Gasoline Range Organics
Extraction Type:		Injection Volume :	
GPC Factor :	PH :		

File ID/Qc Batch:	Dilution:	Date Analyzed	Prep Batch ID
FB009683.D	1	06/24/17 15:40	FB062417

CAS Number	Parameter	Conc.	Qualifier	MDL	LOD	LOQ / CRQL	Units(Dry Weight)
TARGETS							
GRO	GRO	23.5	U	13	23.5	47	ug/kg
SURROGATES							
98-08-8	Alpha,Alpha,Alpha-Trifluoroto	16.1		50 - 150		81%	SPK: 20

Comments:

U = Not Detected
LOQ = Limit of Quantitation
MDL = Method Detection Limit
LOD = Limit of Detection
E = Value Exceeds Calibration Range
P = Indicates >25% difference for detected concentrations between the two GC columns
Q = indicates LCS control criteria did not meet requirements
M = MS/MSD acceptance criteria did not meet requirements

J = Estimated Value
B = Analyte Found in Associated Method Blank
N = Presumptive Evidence of a Compound
* = Values outside of QC limits
D = Dilution
S = Indicates estimated value where valid five-point calibration was not performed prior to analyte detection in sample.
() = Laboratory InHouse Limit

CHEMTECH 284 Sheffield Street, Mountainside, NJ 07092 Phone: 908 789 8900 Fax: 908 789 8922

Report of Analysis

Client:	LiRo Engineers, Inc.	Date Collected:	06/19/17 09:55
Project:	DDC OEGS - Cross Island Pkwy Storm Extension	Date Received:	06/19/17
Client Sample ID:	SB-01-COMP	SDG No.:	I3781
Lab Sample ID:	I3781-05	Matrix:	SOIL
		% Solid:	94.6

Parameter	Conc.	Qua.	DF	MDL	LOD	LOQ / CRQL	Units	Prep Date	Date Ana.	Ana Met.
Paint Filter	1	U	1	1	1	1	ml/100gm		06/20/17 11:20	9095A

Comments:

U = Not Detected
LOQ = Limit of Quantitation
MDL = Method Detection Limit
LOD = Limit of Detection
D = Dilution
Q = indicates LCS control criteria did not meet requirements
H = Sample Analysis Out Of Hold Time

J = Estimated Value
B = Analyte Found in Associated Method Blank
* = indicates the duplicate analysis is not within control limits.
E = Indicates the reported value is estimated because of the presence of interference.
OR = Over Range
N =Spiked sample recovery not within control limits

CHEMTECH 284 Sheffield Street, Mountainside, NJ 07092 Phone: 908 789 8900 Fax: 908 789 8922

Report of Analysis

Client:	LiRo Engineers, Inc.	Date Collected:	06/19/17
Project:	DDC OEGS - Cross Island Pkwy Storm Extension	Date Received:	06/19/17
Client Sample ID:	TRIP-BLANK-1	SDG No.:	I3781
Lab Sample ID:	I3781-06	Matrix:	Water
Analytical Method:	SW8260	% Moisture:	100
Sample Wt/Vol:	5 Units: mL	Final Vol:	5000 uL
Soil Aliquot Vol:	uL	Test:	VOCMS Group1
GC Column:	RXI-624 ID : 0.25	Level :	LOW

File ID/Qc Batch:	Dilution:	Prep Date	Date Analyzed	Prep Batch ID
VN041594.D	1		06/20/17 12:24	VN062017

CAS Number	Parameter	Conc.	Qualifier	MDL	LOD	LOQ / CRQL	Units
TARGETS							
75-71-8	Dichlorodifluoromethane	0.5	U	0.2	0.5	5	ug/L
74-87-3	Chloromethane	0.5	U	0.2	0.5	5	ug/L
75-01-4	Vinyl Chloride	0.5	U	0.34	0.5	5	ug/L
74-83-9	Bromomethane	0.5	U	0.2	0.5	5	ug/L
75-00-3	Chloroethane	0.5	U	0.2	0.5	5	ug/L
75-69-4	Trichlorofluoromethane	0.5	U	0.35	0.5	5	ug/L
76-13-1	1,1,2-Trichlorotrifluoroethane	0.5	U	0.45	0.5	5	ug/L
75-65-0	Tert butyl alcohol	2.5	U	0.5	2.5	25	ug/L
75-35-4	1,1-Dichloroethene	0.5	U	0.47	0.5	5	ug/L
67-64-1	Acetone	2.5	U	0.5	2.5	25	ug/L
75-15-0	Carbon Disulfide	0.5	U	0.2	0.5	5	ug/L
1634-04-4	Methyl tert-butyl Ether	0.5	U	0.35	0.5	5	ug/L
79-20-9	Methyl Acetate	2	U	0.2	2	5	ug/L
75-09-2	Methylene Chloride	0.5	U	0.41	0.5	5	ug/L
156-60-5	trans-1,2-Dichloroethene	0.5	U	0.41	0.5	5	ug/L
75-34-3	1,1-Dichloroethane	0.5	U	0.36	0.5	5	ug/L
110-82-7	Cyclohexane	0.5	U	0.2	0.5	5	ug/L
78-93-3	2-Butanone	2.5	U	1.3	2.5	25	ug/L
56-23-5	Carbon Tetrachloride	0.5	U	0.2	0.5	5	ug/L
156-59-2	cis-1,2-Dichloroethene	0.5	U	0.35	0.5	5	ug/L
74-97-5	Bromochloromethane	0.5	U	0.2	0.5	5	ug/L
67-66-3	Chloroform	0.5	U	0.34	0.5	5	ug/L
71-55-6	1,1,1-Trichloroethane	0.75	U	0.4	0.75	5	ug/L
108-87-2	Methylcyclohexane	0.5	U	0.2	0.5	5	ug/L
71-43-2	Benzene	0.5	U	0.32	0.5	5	ug/L
107-06-2	1,2-Dichloroethane	0.75	U	0.48	0.75	5	ug/L
79-01-6	Trichloroethene	0.5	U	0.28	0.5	5	ug/L
78-87-5	1,2-Dichloropropane	0.5	U	0.46	0.5	5	ug/L
75-27-4	Bromodichloromethane	0.5	U	0.36	0.5	5	ug/L
108-10-1	4-Methyl-2-Pentanone	2.5	U	2.1	2.5	25	ug/L
108-88-3	Toluene	0.5	U	0.37	0.5	5	ug/L
10061-02-6	t-1,3-Dichloropropene	0.5	U	0.29	0.5	5	ug/L

CHEMTECH 284 Sheffield Street, Mountainside, NJ 07092 Phone: 908 789 8900 Fax: 908 789 8922

Report of Analysis

Client:	LiRo Engineers, Inc.	Date Collected:	06/19/17
Project:	DDC OEGS - Cross Island Pkwy Storm Extension	Date Received:	06/19/17
Client Sample ID:	TRIP-BLANK-1	SDG No.:	I3781
Lab Sample ID:	I3781-06	Matrix:	Water
Analytical Method:	SW8260	% Moisture:	100
Sample Wt/Vol:	5 Units: mL	Final Vol:	5000 uL
Soil Aliquot Vol:	uL	Test:	VOCMS Group1
GC Column:	RXI-624 ID : 0.25	Level :	LOW

File ID/Qc Batch:	Dilution:	Prep Date	Date Analyzed	Prep Batch ID
VN041594.D	1		06/20/17 12:24	VN062017

CAS Number	Parameter	Conc.	Qualifier	MDL	LOD	LOQ / CRQL	Units
10061-01-5	cis-1,3-Dichloropropene	0.5	U	0.31	0.5	5	ug/L
79-00-5	1,1,2-Trichloroethane	0.5	U	0.38	0.5	5	ug/L
591-78-6	2-Hexanone	3.8	U	1.9	3.8	25	ug/L
124-48-1	Dibromochloromethane	0.5	U	0.2	0.5	5	ug/L
106-93-4	1,2-Dibromoethane	0.5	U	0.41	0.5	5	ug/L
127-18-4	Tetrachloroethene	0.5	U	0.27	0.5	5	ug/L
108-90-7	Chlorobenzene	0.5	U	0.49	0.5	5	ug/L
100-41-4	Ethyl Benzene	0.5	U	0.2	0.5	5	ug/L
179601-23-1	m/p-Xylenes	1	U	0.95	1	10	ug/L
95-47-6	o-Xylene	0.5	U	0.43	0.5	5	ug/L
100-42-5	Styrene	0.5	U	0.36	0.5	5	ug/L
75-25-2	Bromoform	0.5	U	0.47	0.5	5	ug/L
98-82-8	Isopropylbenzene	0.5	U	0.45	0.5	5	ug/L
79-34-5	1,1,2,2-Tetrachloroethane	0.5	U	0.31	0.5	5	ug/L
541-73-1	1,3-Dichlorobenzene	0.5	U	0.43	0.5	5	ug/L
106-46-7	1,4-Dichlorobenzene	0.5	U	0.32	0.5	5	ug/L
95-50-1	1,2-Dichlorobenzene	0.5	U	0.45	0.5	5	ug/L
96-12-8	1,2-Dibromo-3-Chloropropane	2	U	0.46	2	5	ug/L
120-82-1	1,2,4-Trichlorobenzene	0.5	U	0.2	0.5	5	ug/L
87-61-6	1,2,3-Trichlorobenzene	0.5	U	0.2	0.5	5	ug/L
SURROGATES							
17060-07-0	1,2-Dichloroethane-d4	48.8		61 - 141		98%	SPK: 50
1868-53-7	Dibromofluoromethane	48.4		69 - 133		97%	SPK: 50
2037-26-5	Toluene-d8	50		65 - 126		100%	SPK: 50
460-00-4	4-Bromofluorobenzene	48.2		58 - 135		96%	SPK: 50
INTERNAL STANDARDS							
363-72-4	Pentafluorobenzene	399954	7.99				
540-36-3	1,4-Difluorobenzene	705604	8.89				
3114-55-4	Chlorobenzene-d5	662506	11.68				
855-82-1	1,4-Dichlorobenzene-d4	236646	13.61				

CHEMTECH 284 Sheffield Street, Mountainside, NJ 07092 Phone: 908 789 8900 Fax: 908 789 8922

Report of Analysis

Client:	LiRo Engineers, Inc.	Date Collected:	06/19/17
Project:	DDC OEGS - Cross Island Pkwy Storm Extension	Date Received:	06/19/17
Client Sample ID:	TRIP-BLANK-1	SDG No.:	I3781
Lab Sample ID:	I3781-06	Matrix:	Water
Analytical Method:	SW8260	% Moisture:	100
Sample Wt/Vol:	5 Units: mL	Final Vol:	5000 uL
Soil Aliquot Vol:	uL	Test:	VOCMS Group1
GC Column:	RXI-624 ID : 0.25	Level :	LOW

File ID/Qc Batch:	Dilution:	Prep Date	Date Analyzed	Prep Batch ID
VN041594.D	1		06/20/17 12:24	VN062017

CAS Number	Parameter	Conc.	Qualifier	MDL	LOD	LOQ / CRQL	Units

U = Not Detected
LOQ = Limit of Quantitation
MDL = Method Detection Limit
LOD = Limit of Detection
E = Value Exceeds Calibration Range
Q = indicates LCS control criteria did not meet requirements
M = MS/MSD acceptance criteria did not meet requirements

J = Estimated Value
B = Analyte Found in Associated Method Blank
N = Presumptive Evidence of a Compound
* = Values outside of QC limits
D = Dilution
() = Laboratory InHouse Limit

CHEMTECH 284 Sheffield Street, Mountainside, NJ 07092 Phone: 908 789 8900 Fax: 908 789 8922

Report of Analysis

Client:	LiRo Engineers, Inc.	Date Collected:	06/19/17 08:35
Project:	DDC OEGS - Cross Island Pkwy Storm Extension	Date Received:	06/19/17
Client Sample ID:	SB-09-COMP	SDG No.:	I3781
Lab Sample ID:	I3781-07	Matrix:	SOIL
		% Solid:	100

Parameter	Conc.	Qua.	DF	MDL	LOD	LOQ / CRQL	Units	Prep Date	Date Ana.	Ana Met.
Corrosivity	8.9		1	0	0	0	pH		06/20/17 15:31	9045C
Ignitability	NO		1	0	0	0	oC		06/20/17 10:10	1030
Reactive Cyanide	0.025	U	1	0.025	0.025	0.05	mg/Kg	06/20/17 10:08	06/20/17 14:37	9012B
Reactive Sulfide	25.4		1	10	10	10	mg/Kg	06/20/17 10:09	06/20/17 12:48	9034

Comments:

U = Not Detected
LOQ = Limit of Quantitation
MDL = Method Detection Limit
LOD = Limit of Detection
D = Dilution
Q = indicates LCS control criteria did not meet requirements
H = Sample Analysis Out Of Hold Time

J = Estimated Value
B = Analyte Found in Associated Method Blank
* = indicates the duplicate analysis is not within control limits.
E = Indicates the reported value is estimated because of the presence of interference.
OR = Over Range
N =Spiked sample recovery not within control limits

CHEMTECH 284 Sheffield Street, Mountainside, NJ 07092 Phone: 908 789 8900 Fax: 908 789 8922

Report of Analysis

Client:	LiRo Engineers, Inc.	Date Collected:	06/19/17
Project:	DDC OEGS - Cross Island Pkwy Storm Extension	Date Received:	06/19/17
Client Sample ID:	SB-09-COMP	SDG No.:	I3781
Lab Sample ID:	I3781-07	Matrix:	TCLP
Level (low/med):	low	% Solid:	0

Cas	Parameter	Conc.	Qua.	DF	MDL	LOD	LOQ / CRQL	Units	Prep Date	Date Ana.	Ana Met.
7440-38-2	Arsenic	25	U	1	25	25.0	100	ug/L	06/20/17 11:26	06/20/17 21:27	SW6010
7440-39-3	Barium	1230		1	40	125	500	ug/L	06/20/17 11:26	06/20/17 21:27	SW6010
7440-43-9	Cadmium	7.5	U	1	5	7.5	30	ug/L	06/20/17 11:26	06/20/17 21:27	SW6010
7440-47-3	Chromium	20.7	J	1	11	12.5	50	ug/L	06/20/17 11:26	06/20/17 21:27	SW6010
7439-92-1	Lead	15	U	1	15	15.0	60	ug/L	06/20/17 11:26	06/20/17 21:27	SW6010
7439-97-6	Mercury	1	U	1	1	1.0	2	ug/L	06/20/17 12:59	06/21/17 09:32	SW7470A
7782-49-2	Selenium	50	U	1	48	50.0	100	ug/L	06/20/17 11:26	06/20/17 21:27	SW6010
7440-22-4	Silver	12.5	U	1	12.5	12.5	50	ug/L	06/20/17 11:26	06/20/17 21:27	SW6010

Color Before:	Colorless	Clarity Before:		Texture:	Clear
Color After:	Colorless	Clarity After:		Artifacts:	Clear
Comments:	TCLP METALS				

U = Not Detected
LOQ = Limit of Quantitation
MDL = Method Detection Limit
LOD = Limit of Detection
D = Dilution
Q = indicates LCS control criteria did not meet requirements

J = Estimated Value
B = Analyte Found in Associated Method Blank
* = indicates the duplicate analysis is not within control limits.
E = Indicates the reported value is estimated because of the presence of interference.
OR = Over Range
N =Spiked sample recovery not within control limits

CHEMTECH 284 Sheffield Street, Mountainside, NJ 07092 Phone: 908 789 8900 Fax: 908 789 8922

Report of Analysis

Client:	LiRo Engineers, Inc.	Date Collected:	06/19/17 09:55
Project:	DDC OEGS - Cross Island Pkwy Storm Extension	Date Received:	06/19/17
Client Sample ID:	SB-01-COMP	SDG No.:	I3781
Lab Sample ID:	I3781-08	Matrix:	SOIL
		% Solid:	100

Parameter	Conc.	Qua.	DF	MDL	LOD	LOQ / CRQL	Units	Prep Date	Date Ana.	Ana Met.
Corrosivity	8		1	0	0	0	pH		06/20/17 15:33	9045C
Ignitability	NO		1	0	0	0	oC		06/20/17 10:22	1030
Reactive Cyanide	0.025	U	1	0.025	0.025	0.05	mg/Kg	06/20/17 10:08	06/20/17 14:37	9012B
Reactive Sulfide	36.5		1	10	10	10	mg/Kg	06/20/17 10:09	06/20/17 12:52	9034

Comments:

U = Not Detected
LOQ = Limit of Quantitation
MDL = Method Detection Limit
LOD = Limit of Detection
D = Dilution
Q = indicates LCS control criteria did not meet requirements
H = Sample Analysis Out Of Hold Time

J = Estimated Value
B = Analyte Found in Associated Method Blank
* = indicates the duplicate analysis is not within control limits.
E = Indicates the reported value is estimated because of the presence of interference.
OR = Over Range
N =Spiked sample recovery not within control limits

CHEMTECH 284 Sheffield Street, Mountainside, NJ 07092 Phone: 908 789 8900 Fax: 908 789 8922

Report of Analysis

Client:	LiRo Engineers, Inc.	Date Collected:	06/19/17
Project:	DDC OEGS - Cross Island Pkwy Storm Extension	Date Received:	06/19/17
Client Sample ID:	SB-01-COMP	SDG No.:	I3781
Lab Sample ID:	I3781-08	Matrix:	TCLP
Level (low/med):	low	% Solid:	0

Cas	Parameter	Conc.	Qua.	DF	MDL	LOD	LOQ / CRQL	Units	Prep Date	Date Ana.	Ana Met.
7440-38-2	Arsenic	25	U	1	25	25.0	100	ug/L	06/20/17 11:26	06/20/17 21:32	SW6010
7440-39-3	Barium	1160		1	40	125	500	ug/L	06/20/17 11:26	06/20/17 21:32	SW6010
7440-43-9	Cadmium	7.5	U	1	5	7.5	30	ug/L	06/20/17 11:26	06/20/17 21:32	SW6010
7440-47-3	Chromium	12.5	U	1	11	12.5	50	ug/L	06/20/17 11:26	06/20/17 21:32	SW6010
7439-92-1	Lead	15	U	1	15	15.0	60	ug/L	06/20/17 11:26	06/20/17 21:32	SW6010
7439-97-6	Mercury	1	U	1	1	1.0	2	ug/L	06/20/17 12:59	06/21/17 09:34	SW7470A
7782-49-2	Selenium	50	U	1	48	50.0	100	ug/L	06/20/17 11:26	06/20/17 21:32	SW6010
7440-22-4	Silver	12.5	U	1	12.5	12.5	50	ug/L	06/20/17 11:26	06/20/17 21:32	SW6010

Color Before:	Colorless	Clarity Before:		Texture:	Clear
Color After:	Colorless	Clarity After:		Artifacts:	Clear
Comments:	TCLP METALS				

U = Not Detected
LOQ = Limit of Quantitation
MDL = Method Detection Limit
LOD = Limit of Detection
D = Dilution
Q = indicates LCS control criteria did not meet requirements

J = Estimated Value
B = Analyte Found in Associated Method Blank
* = indicates the duplicate analysis is not within control limits.
E = Indicates the reported value is estimated because of the presence of interference.
OR = Over Range
N =Spiked sample recovery not within control limits

CHEMTECH 284 Sheffield Street, Mountainside, NJ 07092 Phone: 908 789 8900 Fax: 908 789 8922

DATA FOR

VOLATILE ORGANICS

SEMI-VOLATILE ORGANICS

GC SEMI-VOLATILES

METALS

GENERAL CHEMISTRY

PROJECT NAME : DDC OEGS - CROSS ISLAND PKWY STORM EXTENSION

LIRO ENGINEERS, INC.

690 Delaware Ave.

Buffalo, NY - 14209

Phone No: 716-882-5476

ORDER ID : I3799

ATTENTION : Jon Williams

ACCREDITED IN ACCORDANCE WITH nelac

DoD ELAP

CHEMTECH 284 Sheffield Street, Mountainside, NJ 07092 Phone: 908 789 8900 Fax: 908 789 8922

Date : 06/27/2017

Dear Jon Williams,

1 water and **21** soil samples for the **DDC OEGS - Cross Island Pkwy Storm Extension** project were received on **06/20/2017.** The analytical fax results for those samples requested for an expedited turn around time may be seen in this report. Please contact me if you have any questions or concerns

The invoice for this workorder is also attached to the e-mail.

Regards,

Loreana Davi

Loreana@chemtech.net

CHEMTECH
CHAIN OF CUSTODY RECORD

284 Sheffield Street, Mountainside, NJ 07092
(908) 789-8900 Fax (908) 789-8922
www.chemtech.net

CHEMTECH PROJECT NO. I3719
QUOTE NO.
COC Number 041666

CLIENT INFORMATION (REPORT TO BE SENT TO:)
COMPANY: LiRO Engineers, Inc.
ADDRESS: 703 Lorimer Street
CITY: Brooklyn STATE: NY ZIP: 11211
ATTENTION: Jon Williams
PHONE: 716 882 9645 FAX: —

CLIENT PROJECT INFORMATION
PROJECT NAME: Cross Island Parkway, Storm Extension & watermain
PROJECT NO.: 15-008-0265 LOCATION: Queens, NY
PROJECT MANAGER: Jon Williams
e-mail: williamsJe liro.com
PHONE: — FAX: —

CLIENT BILLING INFORMATION
BILL TO: PO#:
ADDRESS: same
CITY: STATE: ZIP:
ATTENTION: PHONE:

DATA TURNAROUND INFORMATION
FAX: DAYS *
HARD COPY: DAYS *
EDD: 5 day TAT DAYS *
PREAPPROVED TAT: ☒ YES ☐ NO
* STANDARD TURNAROUND TIME IS 10 BUSINESS DAYS

DATA DELIVERABLE INFORMATION
☑ LEVEL 1: Results only ☐ Others
☐ LEVEL 2: Results + QC
☐ LEVEL 3: Results (plus results raw data) + QC
☐ LEVEL 4: Results + QC (all raw data)
☐ EDD Format:

ANALYSIS

CHEMTECH SAMPLE ID	PROJECT SAMPLE IDENTIFICATION	SAMPLE MATRIX	SAMPLE TYPE COMP	SAMPLE TYPE GRAB	SAMPLE COLLECTION DATE	SAMPLE COLLECTION TIME	# OF BOTTLES	1 TCL VOCs	2 SVOCs	3 PCBs	4 Pesticides	5 TAL Metals	6 TPHC DRO/GRO	7 RCRA Parameters	8 TCLP RCRA Metals	9	COMMENTS
1.	SB-02-7.5-8.0'	soil		X	6/19/17	1040	2	X	X	X	X	X					
2.	SB-02-comp	soil	X			1045	3						X	X	X		
3.	SB-03-9.5-10.0'	soil		X		1115	2	X	X	X	X	X					
4.	SB-03-comp		X			1120	3						X	X	X		
5.	SB-04-14.5-15.0'			X		1300	2	X	X	X	X	X					
6.	SB-04-comp		X			1305	3						X	X	X		
7.	SB-05-9.5-10.0'			X	6/20/17	0810	2	X	X	X	X	X					
8.	SB-05-comp		X			0815	3						X	X	X		
9.	SB-06-9.5-10.0'			X		0840	2	X	X	X	X	X					
10.	SB-06-comp		X			0845	3						X	X	X		

PRESERVATIVES: E (1) → (9)

COMMENTS: ← Specify Preservatives
A-HCl B-HNO_3
C-H_2SO_4 D-NaOH
E-ICE F-Other

SAMPLE CUSTODY MUST BE DOCUMENTED BELOW EACH TIME SAMPLES CHANGE POSSESSION INCLUDING COURIER DELIVERY

RELINQUISHED BY SAMPLER	DATE/TIME	RECEIVED BY
1. [signature]	6/20/17 11:2	1. [signature]
RELINQUISHED BY: 2.	DATE/TIME:	RECEIVED BY: 2.
RELINQUISHED BY: 3. [signature]	DATE/TIME: 1515 6.20.17	RECEIVED FOR LAB BY: 3. [signature]

Conditions of bottles or coolers at receipt: ☐ Compliant ☐ Non Compliant
MeOH extraction requires an additional 4 oz jar for percent solid.
Comments:

Cooler Temp. 5.0°C
Ice in Cooler?: yes

Page 1 of 2

SHIPPED VIA: CLIENT: ☐ HAND DELIVERED ☐ OVERNIGHT
CHEMTECH: ☒ PICKED UP ☐ OVERNIGHT

Shipment Complete: ☐ YES ☐ NO

Revision 8/2007

WHITE - CHEMTECH COPY FOR RETURN TO CLIENT YELLOW - CHEMTECH COPY PINK - SAMPLER COPY

CHEMTECH
CHAIN OF CUSTODY RECORD

284 Sheffield Street, Mountainside, NJ 07092
(908) 789-8900 Fax (908) 789-8922
www.chemtech.net

CHEMTECH PROJECT NO. 137799
QUOTE NO.
COC Number 041667

CLIENT INFORMATION (REPORT TO BE SENT TO:)

COMPANY: Liro Engineers, Inc.
ADDRESS: 703 Lorimer Street
CITY: Brooklyn STATE: NY ZIP: 11211
ATTENTION: Jon Williams
PHONE: 716 882 9645 FAX: —

CLIENT PROJECT INFORMATION

PROJECT NAME:
PROJECT NO.: LOCATION:
PROJECT MANAGER: same as pg # 1
e-mail:
PHONE: FAX:

CLIENT BILLING INFORMATION

BILL TO: PO#:
ADDRESS: same
CITY: STATE: ZIP:
ATTENTION: PHONE:

DATA TURNAROUND INFORMATION

FAX: DAYS *
HARD COPY: DAYS *
EDD: 5 day TAT DAYS *
PREAPPROVED TAT: ☒ YES ☐ NO
* STANDARD TURNAROUND TIME IS 10 BUSINESS DAYS

DATA DELIVERABLE INFORMATION

☑ LEVEL 1: Results only ☐ Others
☐ LEVEL 2: Results + QC
☐ LEVEL 3: Results (plus results raw data) + QC
☐ LEVEL 4: Results + QC (all raw data)
☐ EDD Format:

ANALYSIS

1 TCL VOCs, 2 SVOCs, 3 PCBs, 4 Pesticides, 5 TAL metals, 6 TPHC DRO/GRO, 7 RCRA Parameters, 8 TCLP RCRA Metals, 9

PRESERVATIVES (1 → 9)

COMMENTS ← Specify Preservatives: A–HCl, B–HNO_3, C–H_2SO_4, D–NaOH, E–ICE, F–Other

CHEMTECH SAMPLE ID	PROJECT SAMPLE IDENTIFICATION	SAMPLE MATRIX	SAMPLE TYPE COMP	SAMPLE TYPE GRAB	SAMPLE COLLECTION DATE	SAMPLE COLLECTION TIME	# OF BOTTLES	1	2	3	4	5	6	7	8	9	COMMENTS
1.	SB-07-12.5-13.0'	soil		X	6/20/17	0940	2	X	X	X	X	X					
2.	SB-07-comp	soil	X		↓	0945	3						X	X	X		
3.	SB-08-11.5-12.0'	soil		X		1055	2	X	X	X	X	X					
4.	SB-08-comp	soil	X		↓	1100	3						X	X	X		
5.	Trip Blank #2	DI water		X	—	—	2	X									
6.																	
7.																	
8.																	
9.																	
10.																	

SAMPLE CUSTODY MUST BE DOCUMENTED BELOW EACH TIME SAMPLES CHANGE POSSESSION INCLUDING COURIER DELIVERY

RELINQUISHED BY SAMPLER	DATE/TIME	RECEIVED BY
1. [signature]	6/20/17 11:25	1. [signature]
RELINQUISHED BY: 2. [signature]	DATE/TIME:	RECEIVED BY: 2.
RELINQUISHED BY: 3. [signature]	DATE/TIME: 1515 6-20-17	RECEIVED FOR LAB BY: 3. [signature]

Conditions of bottles or coolers at receipt: ☐ Compliant ☐ Non Compliant
MeOH extraction requires an additional 4 oz jar for percent solid.
Comments:
Cooler Temp. 3.0 c
Ice in Cooler?: yes

Page 2 of 2

SHIPPED VIA: CLIENT: ☐ HAND DELIVERED ☐ OVERNIGHT
CHEMTECH: ☒ PICKED UP ☐ OVERNIGHT
Shipment Complete: ☐ YES ☐ NO

Revision 8/2007

WHITE - CHEMTECH COPY FOR RETURN TO CLIENT YELLOW - CHEMTECH COPY PINK - SAMPLER COPY

HA[illegible]52

CHEMTECH 284 Sheffield Street, Mountainside, NJ 07092 Phone: 908 789 8900 Fax: 908 789 8922

Report of Analysis

Client:	LiRo Engineers, Inc.	Date Collected:	06/19/17
Project:	DDC OEGS - Cross Island Pkwy Storm Extension	Date Received:	06/20/17
Client Sample ID:	SB-02-7.5-8.0	SDG No.:	I3799
Lab Sample ID:	I3799-01	Matrix:	SOIL
Level (low/med):	low	% Solid:	96.6

Cas	Parameter	Conc.	Qua.	DF	MDL	LOD	LOQ / CRQL	Units(Dry Weight)	Prep Date	Date Ana.	Ana Met.
7429-90-5	Aluminum	2560		1	0.746	1.11	4.44	mg/Kg	06/21/17 09:47	06/22/17 12:49	SW6010
7440-36-0	Antimony	0.555	UN	1	0.498	0.555	2.22	mg/Kg	06/21/17 09:47	06/22/17 12:49	SW6010
7440-38-2	Arsenic	1.59		1	0.222	0.222	0.889	mg/Kg	06/21/17 09:47	06/22/17 12:49	SW6010
7440-39-3	Barium	12	N	1	0.355	1.11	4.44	mg/Kg	06/21/17 09:47	06/22/17 12:49	SW6010
7440-41-7	Beryllium	0.088	J	1	0.053	0.067	0.267	mg/Kg	06/21/17 09:47	06/22/17 12:49	SW6010
7440-43-9	Cadmium	0.067	U	1	0.053	0.067	0.267	mg/Kg	06/21/17 09:47	06/22/17 12:49	SW6010
7440-70-2	Calcium	239		1	0.951	22.2	88.9	mg/Kg	06/21/17 09:47	06/22/17 12:49	SW6010
7440-47-3	Chromium	6.52		1	0.111	0.111	0.444	mg/Kg	06/21/17 09:47	06/22/17 12:49	SW6010
7440-48-4	Cobalt	4.18		1	0.333	0.333	1.33	mg/Kg	06/21/17 09:47	06/22/17 12:49	SW6010
7440-50-8	Copper	8		1	0.222	0.222	0.889	mg/Kg	06/21/17 09:47	06/22/17 12:49	SW6010
7439-89-6	Iron	8500		1	1.11	1.11	4.44	mg/Kg	06/21/17 09:47	06/22/17 12:49	SW6010
7439-92-1	Lead	3.7		1	0.107	0.222	0.533	mg/Kg	06/21/17 09:47	06/22/17 12:49	SW6010
7439-95-4	Magnesium	897		1	4.07	22.2	88.9	mg/Kg	06/21/17 09:47	06/22/17 12:49	SW6010
7439-96-5	Manganese	123		1	0.169	0.222	0.889	mg/Kg	06/21/17 09:47	06/22/17 12:49	SW6010
7439-97-6	Mercury	0.007	U	1	0.007	0.007	0.013	mg/Kg	06/20/17 18:43	06/21/17 18:54	SW7471A
7440-02-0	Nickel	11.9		1	0.409	0.444	1.78	mg/Kg	06/21/17 09:47	06/22/17 12:49	SW6010
7440-09-7	Potassium	301		1	3.11	22.2	88.9	mg/Kg	06/21/17 09:47	06/22/17 12:49	SW6010
7782-49-2	Selenium	2.9		1	0.222	0.222	0.889	mg/Kg	06/21/17 09:47	06/22/17 12:49	SW6010
7440-22-4	Silver	0.538		1	0.111	0.111	0.444	mg/Kg	06/21/17 09:47	06/22/17 12:49	SW6010
7440-23-5	Sodium	73.1	J	1	2.24	22.2	88.9	mg/Kg	06/21/17 09:47	06/22/17 12:49	SW6010
7440-28-0	Thallium	0.444	U	1	0.24	0.444	1.78	mg/Kg	06/21/17 09:47	06/22/17 12:49	SW6010
7440-62-2	Vanadium	7.59		1	0.444	0.444	1.78	mg/Kg	06/21/17 09:47	06/22/17 12:49	SW6010
7440-66-6	Zinc	9.39	N	1	0.444	0.444	1.78	mg/Kg	06/21/17 09:47	06/22/17 12:49	SW6010

Color Before:	Brown	Clarity Before:		Texture:	Medium
Color After:	Yellow	Clarity After:		Artifacts:	No
Comments:	METALS-TAL				

U = Not Detected
LOQ = Limit of Quantitation
MDL = Method Detection Limit
LOD = Limit of Detection
D = Dilution
Q = indicates LCS control criteria did not meet requirements

J = Estimated Value
B = Analyte Found in Associated Method Blank
* = indicates the duplicate analysis is not within control limits.
E = Indicates the reported value is estimated because of the presence of interference.
OR = Over Range
N =Spiked sample recovery not within control limits

CHEMTECH 284 Sheffield Street, Mountainside, NJ 07092 Phone: 908 789 8900 Fax: 908 789 8922

Report of Analysis

Client:	LiRo Engineers, Inc.	Date Collected:	06/19/17
Project:	DDC OEGS - Cross Island Pkwy Storm Extension	Date Received:	06/20/17
Client Sample ID:	SB-02-7.5-8.0	SDG No.:	I3799
Lab Sample ID:	I3799-01	Matrix:	SOIL
Analytical Method:	SW8082A	% Moisture:	3.4 Decanted:
Sample Wt/Vol:	30.15 Units: g	Final Vol:	10000 uL
Soil Aliquot Vol:	uL	Test:	PCB
Extraction Type:		Injection Volume	
GPC Factor :	1.0 PH :		

File ID/Qc Batch:	Dilution:	Prep Date	Date Analyzed	Prep Batch ID
PO035491.D	1	06/21/17 08:13	06/22/17 19:06	PB99995

CAS Number	Parameter	Conc.	Qualifier	MDL	LOD	LOQ / CRQL	Units(Dry Weight)
TARGETS							
12674-11-2	Aroclor-1016	3.4	U	3.4	3.4	17.5	ug/kg
11104-28-2	Aroclor-1221	3.4	U	3.4	3.4	17.5	ug/kg
11141-16-5	Aroclor-1232	3.4	U	3.4	3.4	17.5	ug/kg
53469-21-9	Aroclor-1242	3.4	U	3.4	3.4	17.5	ug/kg
12672-29-6	Aroclor-1248	3.4	U	3.4	3.4	17.5	ug/kg
11097-69-1	Aroclor-1254	3.4	U	1.5	3.4	17.5	ug/kg
37324-23-5	Aroclor-1262	3.4	U	3.4	3.4	17.5	ug/kg
11100-14-4	Aroclor-1268	3.4	U	3.4	3.4	17.5	ug/kg
11096-82-5	Aroclor-1260	3.4	U	3.4	3.4	17.5	ug/kg
SURROGATES							
877-09-8	Tetrachloro-m-xylene	26.3		10 - 166		132%	SPK: 20
2051-24-3	Decachlorobiphenyl	22.2		60 - 125		111%	SPK: 20

Comments:

U = Not Detected
LOQ = Limit of Quantitation
MDL = Method Detection Limit
LOD = Limit of Detection
E = Value Exceeds Calibration Range
P = Indicates >25% difference for detected concentrations between the two GC columns
Q = indicates LCS control criteria did not meet requirements
M = MS/MSD acceptance criteria did not meet requirements

J = Estimated Value
B = Analyte Found in Associated Method Blank
N = Presumptive Evidence of a Compound
* = Values outside of QC limits
D = Dilution
S = Indicates estimated value where valid five-point calibration was not performed prior to analyte detection in sample.
() = Laboratory InHouse Limit

CHEMTECH 284 Sheffield Street, Mountainside, NJ 07092 Phone: 908 789 8900 Fax: 908 789 8922

Report of Analysis

Client:	LiRo Engineers, Inc.	Date Collected:	06/19/17
Project:	DDC OEGS - Cross Island Pkwy Storm Extension	Date Received:	06/20/17
Client Sample ID:	SB-02-7.5-8.0	SDG No.:	I3799
Lab Sample ID:	I3799-01	Matrix:	SOIL
Analytical Method:	SW8081	% Moisture:	3.4 Decanted:
Sample Wt/Vol:	30.15 Units: g	Final Vol:	10000 uL
Soil Aliquot Vol:	uL	Test:	PESTICIDE Group1
Extraction Type:		Injection Volume :	
GPC Factor :	1.0 PH :		

File ID/Qc Batch:	Dilution:	Prep Date	Date Analyzed	Prep Batch ID
PL026296.D	1	06/21/17 08:16	06/21/17 16:39	PB99996

CAS Number	Parameter	Conc.	Qualifier	MDL	LOD	LOQ / CRQL	Units(Dry Weight)
TARGETS							
319-84-6	alpha-BHC	0.34	U	0.134	0.34	1.8	ug/kg
319-85-7	beta-BHC	0.34	U	0.185	0.34	1.8	ug/kg
319-86-8	delta-BHC	0.34	U	0.103	0.34	1.8	ug/kg
58-89-9	gamma-BHC (Lindane)	0.34	U	0.154	0.34	1.8	ug/kg
76-44-8	Heptachlor	0.34	U	0.144	0.34	1.8	ug/kg
309-00-2	Aldrin	0.34	U	0.103	0.34	1.8	ug/kg
1024-57-3	Heptachlor epoxide	0.34	U	0.165	0.34	1.8	ug/kg
959-98-8	Endosulfan I	0.34	U	0.154	0.34	1.8	ug/kg
60-57-1	Dieldrin	0.34	U	0.134	0.34	1.8	ug/kg
72-55-9	4,4-DDE	0.34	U	0.206	0.34	1.8	ug/kg
72-20-8	Endrin	0.34	U	0.185	0.34	1.8	ug/kg
33213-65-9	Endosulfan II	0.34	U	0.144	0.34	1.8	ug/kg
72-54-8	4,4-DDD	0.34	U	0.175	0.34	1.8	ug/kg
1031-07-8	Endosulfan Sulfate	0.34	U	0.154	0.34	1.8	ug/kg
50-29-3	4,4-DDT	0.34	U	0.144	0.34	1.8	ug/kg
72-43-5	Methoxychlor	0.34	U	0.175	0.34	1.8	ug/kg
53494-70-5	Endrin ketone	0.34	U	0.134	0.34	1.8	ug/kg
7421-93-4	Endrin aldehyde	0.34	U	0.154	0.34	1.8	ug/kg
5103-71-9	alpha-Chlordane	0.34	U	0.144	0.34	1.8	ug/kg
5103-74-2	gamma-Chlordane	0.34	U	0.134	0.34	1.8	ug/kg
8001-35-2	Toxaphene	3.4	U	3.4	3.4	17.5	ug/kg
SURROGATES							
2051-24-3	Decachlorobiphenyl	25.8		10 - 169		129%	SPK: 20
877-09-8	Tetrachloro-m-xylene	21.9		31 - 151		109%	SPK: 20

CHEMTECH 284 Sheffield Street, Mountainside, NJ 07092 Phone: 908 789 8900 Fax: 908 789 8922

Report of Analysis

Client:	LiRo Engineers, Inc.	Date Collected:	06/19/17
Project:	DDC OEGS - Cross Island Pkwy Storm Extension	Date Received:	06/20/17
Client Sample ID:	SB-02-7.5-8.0	SDG No.:	I3799
Lab Sample ID:	I3799-01	Matrix:	SOIL
Analytical Method:	SW8081	% Moisture:	3.4 Decanted:
Sample Wt/Vol:	30.15 Units: g	Final Vol:	10000 uL
Soil Aliquot Vol:	uL	Test:	PESTICIDE Group1
Extraction Type:		Injection Volume :	
GPC Factor :	1.0 PH :		

File ID/Qc Batch:	Dilution:	Prep Date	Date Analyzed	Prep Batch ID
PL026296.D	1	06/21/17 08:16	06/21/17 16:39	PB99996

CAS Number	Parameter	Conc.	Qualifier	MDL	LOD	LOQ / CRQL	Units

Comments:

U = Not Detected
LOQ = Limit of Quantitation
MDL = Method Detection Limit
LOD = Limit of Detection
E = Value Exceeds Calibration Range
P = Indicates >25% difference for detected concentrations between the two GC columns
Q = indicates LCS control criteria did not meet requirements
M = MS/MSD acceptance criteria did not meet requirements

J = Estimated Value
B = Analyte Found in Associated Method Blank
N = Presumptive Evidence of a Compound
* = Values outside of QC limits
D = Dilution
S = Indicates estimated value where valid five-point calibration was not performed prior to analyte detection in sample.
() = Laboratory InHouse Limit

CHEMTECH 284 Sheffield Street, Mountainside, NJ 07092 Phone: 908 789 8900 Fax: 908 789 8922

Report of Analysis

Client:	LiRo Engineers, Inc.	Date Collected:	06/19/17
Project:	DDC OEGS - Cross Island Pkwy Storm Extension	Date Received:	06/20/17
Client Sample ID:	SB-02-7.5-8.0	SDG No.:	I3799
Lab Sample ID:	I3799-01	Matrix:	SOIL
Analytical Method:	SW8270	% Moisture:	3.4
Sample Wt/Vol:	30.11 Units: g	Final Vol:	1000 uL
Soil Aliquot Vol:	uL	Test:	SVOCMS Group1
Extraction Type :	Decanted : N	Level :	LOW
Injection Volume :	GPC Factor : 1.0	GPC Cleanup :	N PH :

File ID/Qc Batch:	Dilution:	Prep Date	Date Analyzed	Prep Batch ID
BG027587.D	1	06/21/17 08:55	06/22/17 09:03	PB99997

CAS Number	Parameter	Conc.	Qualifier	MDL	LOD	LOQ / CRQL	Units(Dry Weight)
TARGETS							
100-52-7	Benzaldehyde	34.4	U	17.9	34.4	340	ug/Kg
108-95-2	Phenol	34.4	U	7.9	34.4	340	ug/Kg
111-44-4	bis(2-Chloroethyl)ether	34.4	U	16.5	34.4	340	ug/Kg
95-57-8	2-Chlorophenol	34.4	U	18.2	34.4	340	ug/Kg
95-48-7	2-Methylphenol	34.4	U	18.7	34.4	340	ug/Kg
108-60-1	2,2-oxybis(1-Chloropropane)	34.4	U	14.2	34.4	340	ug/Kg
98-86-2	Acetophenone	34.4	U	10.5	34.4	340	ug/Kg
65794-96-9	3+4-Methylphenols	34.4	U	17.8	34.4	340	ug/Kg
621-64-7	n-Nitroso-di-n-propylamine	34.4	U	17.3	34.4	340	ug/Kg
67-72-1	Hexachloroethane	34.4	U	15.4	34.4	340	ug/Kg
98-95-3	Nitrobenzene	34.4	U	13	34.4	340	ug/Kg
78-59-1	Isophorone	34.4	U	11.3	34.4	340	ug/Kg
88-75-5	2-Nitrophenol	34.4	U	16.6	34.4	340	ug/Kg
105-67-9	2,4-Dimethylphenol	34.4	U	19.5	34.4	340	ug/Kg
111-91-1	bis(2-Chloroethoxy)methane	34.4	U	19.8	34.4	340	ug/Kg
120-83-2	2,4-Dichlorophenol	34.4	U	13.1	34.4	340	ug/Kg
91-20-3	Naphthalene	34.4	U	11.9	34.4	340	ug/Kg
106-47-8	4-Chloroaniline	34.4	U	24.2	34.4	340	ug/Kg
87-68-3	Hexachlorobutadiene	34.4	U	12.5	34.4	340	ug/Kg
105-60-2	Caprolactam	68.8	U	16	68.8	340	ug/Kg
59-50-7	4-Chloro-3-methylphenol	34.4	U	15.3	34.4	340	ug/Kg
91-57-6	2-Methylnaphthalene	34.4	U	8.7	34.4	340	ug/Kg
77-47-4	Hexachlorocyclopentadiene	34.4	U	8.4	34.4	340	ug/Kg
88-06-2	2,4,6-Trichlorophenol	34.4	U	10.5	34.4	340	ug/Kg
95-95-4	2,4,5-Trichlorophenol	34.4	U	24.1	34.4	340	ug/Kg
92-52-4	1,1-Biphenyl	34.4	U	13	34.4	340	ug/Kg
91-58-7	2-Chloronaphthalene	34.4	U	7.8	34.4	340	ug/Kg
88-74-4	2-Nitroaniline	34.4	U	15.3	34.4	340	ug/Kg
131-11-3	Dimethylphthalate	220	J	9.3	34.4	340	ug/Kg
208-96-8	Acenaphthylene	34.4	U	8.7	34.4	340	ug/Kg
606-20-2	2,6-Dinitrotoluene	34.4	U	14	34.4	340	ug/Kg

CHEMTECH 284 Sheffield Street, Mountainside, NJ 07092 Phone: 908 789 8900 Fax: 908 789 8922

Report of Analysis

Client:	LiRo Engineers, Inc.	Date Collected:	06/19/17
Project:	DDC OEGS - Cross Island Pkwy Storm Extension	Date Received:	06/20/17
Client Sample ID:	SB-02-7.5-8.0	SDG No.:	I3799
Lab Sample ID:	I3799-01	Matrix:	SOIL
Analytical Method:	SW8270	% Moisture:	3.4
Sample Wt/Vol:	30.11 Units: g	Final Vol:	1000 uL
Soil Aliquot Vol:	uL	Test:	SVOCMS Group1
Extraction Type :	Decanted : N	Level :	LOW
Injection Volume :	GPC Factor : 1.0	GPC Cleanup :	N PH :

File ID/Qc Batch:	Dilution:	Prep Date	Date Analyzed	Prep Batch ID
BG027587.D	1	06/21/17 08:55	06/22/17 09:03	PB99997

CAS Number	Parameter	Conc.	Qualifier	MDL	LOD	LOQ / CRQL	Units(Dry Weight)
99-09-2	3-Nitroaniline	68.8	U	22.1	68.8	340	ug/Kg
83-32-9	Acenaphthene	34.4	U	9.7	34.4	340	ug/Kg
51-28-5	2,4-Dinitrophenol	280	U	35	280	340	ug/Kg
100-02-7	4-Nitrophenol	170	U	63.8	170	340	ug/Kg
132-64-9	Dibenzofuran	34.4	U	13.4	34.4	340	ug/Kg
121-14-2	2,4-Dinitrotoluene	34.4	U	10.3	34.4	340	ug/Kg
84-66-2	Diethylphthalate	34.4	U	5.4	34.4	340	ug/Kg
7005-72-3	4-Chlorophenyl-phenylether	34.4	U	18.7	34.4	340	ug/Kg
86-73-7	Fluorene	34.4	U	13	34.4	340	ug/Kg
100-01-6	4-Nitroaniline	68.8	U	44.8	68.8	340	ug/Kg
534-52-1	4,6-Dinitro-2-methylphenol	170	U	19.7	170	340	ug/Kg
86-30-6	n-Nitrosodiphenylamine	34.4	U	8.3	34.4	340	ug/Kg
101-55-3	4-Bromophenyl-phenylether	34.4	U	6.7	34.4	340	ug/Kg
118-74-1	Hexachlorobenzene	34.4	U	14	34.4	340	ug/Kg
1912-24-9	Atrazine	34.4	U	18.2	34.4	340	ug/Kg
87-86-5	Pentachlorophenol	34.4	U	23.5	34.4	340	ug/Kg
85-01-8	Phenanthrene	34.4	U	9.3	34.4	340	ug/Kg
120-12-7	Anthracene	34.4	U	7	34.4	340	ug/Kg
86-74-8	Carbazole	34.4	U	7.5	34.4	340	ug/Kg
84-74-2	Di-n-butylphthalate	34.4	U	27	34.4	340	ug/Kg
206-44-0	Fluoranthene	34.4	U	6.9	34.4	340	ug/Kg
129-00-0	Pyrene	34.4	U	8.3	34.4	340	ug/Kg
85-68-7	Butylbenzylphthalate	34.4	U	16.5	34.4	340	ug/Kg
91-94-1	3,3-Dichlorobenzidine	34.4	U	22.1	34.4	340	ug/Kg
56-55-3	Benzo(a)anthracene	34.4	U	16.4	34.4	340	ug/Kg
218-01-9	Chrysene	34.4	U	15.6	34.4	340	ug/Kg
117-81-7	Bis(2-ethylhexyl)phthalate	34.4	U	12.2	34.4	340	ug/Kg
117-84-0	Di-n-octyl phthalate	34.4	U	3.9	34.4	340	ug/Kg
205-99-2	Benzo(b)fluoranthene	34.4	U	11.2	34.4	340	ug/Kg
207-08-9	Benzo(k)fluoranthene	34.4	U	16.2	34.4	340	ug/Kg
50-32-8	Benzo(a)pyrene	34.4	U	7.4	34.4	340	ug/Kg
193-39-5	Indeno(1,2,3-cd)pyrene	34.4	U	11.4	34.4	340	ug/Kg
53-70-3	Dibenzo(a,h)anthracene	34.4	U	9.9	34.4	340	ug/Kg

CHEMTECH 284 Sheffield Street, Mountainside, NJ 07092 Phone: 908 789 8900 Fax: 908 789 8922

Report of Analysis

Client:	LiRo Engineers, Inc.	Date Collected:	06/19/17
Project:	DDC OEGS - Cross Island Pkwy Storm Extension	Date Received:	06/20/17
Client Sample ID:	SB-02-7.5-8.0	SDG No.:	I3799
Lab Sample ID:	I3799-01	Matrix:	SOIL
Analytical Method:	SW8270	% Moisture:	3.4
Sample Wt/Vol:	30.11 Units: g	Final Vol:	1000 uL
Soil Aliquot Vol:	uL	Test:	SVOCMS Group1
Extraction Type :	Decanted : N	Level :	LOW
Injection Volume :	GPC Factor : 1.0	GPC Cleanup :	N PH :

File ID/Qc Batch:	Dilution:	Prep Date	Date Analyzed	Prep Batch ID
BG027587.D	1	06/21/17 08:55	06/22/17 09:03	PB99997

CAS Number	Parameter	Conc.	Qualifier	MDL	LOD	LOQ / CRQL	Units(Dry Weight)
191-24-2	Benzo(g,h,i)perylene	34.4	U	13.9	34.4	340	ug/Kg
95-94-3	1,2,4,5-Tetrachlorobenzene	34.4	U	13.5	34.4	340	ug/Kg
123-91-1	1,4-Dioxane	68.8	U	13.5	68.8	340	ug/Kg
58-90-2	2,3,4,6-Tetrachlorophenol	34.4	U	13.5	34.4	340	ug/Kg
SURROGATES							
367-12-4	2-Fluorophenol	110		28 - 127		71%	SPK: 150
13127-88-3	Phenol-d6	100		34 - 127		67%	SPK: 150
4165-60-0	Nitrobenzene-d5	70		31 - 132		70%	SPK: 100
321-60-8	2-Fluorobiphenyl	71		39 - 123		71%	SPK: 100
118-79-6	2,4,6-Tribromophenol	120		30 - 133		80%	SPK: 150
1718-51-0	Terphenyl-d14	78.9		37 - 115		79%	SPK: 100
INTERNAL STANDARDS							
3855-82-1	1,4-Dichlorobenzene-d4	19921	8.5				
1146-65-2	Naphthalene-d8	89316	11.32				
15067-26-2	Acenaphthene-d10	56617	15.09				
1517-22-2	Phenanthrene-d10	169559	17.84				
1719-03-5	Chrysene-d12	195425	22.2				
1520-96-3	Perylene-d12	189489	25.84				

U = Not Detected
LOQ = Limit of Quantitation
MDL = Method Detection Limit
LOD = Limit of Detection
E = Value Exceeds Calibration Range
Q = indicates LCS control criteria did not meet requirements
M = MS/MSD acceptance criteria did not meet requirements

J = Estimated Value
B = Analyte Found in Associated Method Blank
N = Presumptive Evidence of a Compound
* = Values outside of QC limits
D = Dilution
() = Laboratory InHouse Limit

CHEMTECH 284 Sheffield Street, Mountainside, NJ 07092 Phone: 908 789 8900 Fax: 908 789 8922

Report of Analysis

Client:	LiRo Engineers, Inc.	Date Collected:	06/19/17
Project:	DDC OEGS - Cross Island Pkwy Storm Extension	Date Received:	06/20/17
Client Sample ID:	SB-02-7.5-8.0	SDG No.:	I3799
Lab Sample ID:	I3799-01	Matrix:	SOIL
Analytical Method:	SW8260	% Moisture:	3.4
Sample Wt/Vol:	5 Units: g	Final Vol:	5000 uL
Soil Aliquot Vol:	uL	Test:	VOCMS Group1
GC Column:	RTX-VMS ID : 0.18	Level :	LOW

File ID/Qc Batch:	Dilution:	Prep Date	Date Analyzed	Prep Batch ID
VF053135.D	1		06/22/17 20:06	VF062217

CAS Number	Parameter	Conc.	Qualifier	MDL	LOD	LOQ / CRQL	Units(Dry Weight)
TARGETS							
75-71-8	Dichlorodifluoromethane	0.52	U	0.52	0.52	5.2	ug/Kg
74-87-3	Chloromethane	0.52	U	0.52	0.52	5.2	ug/Kg
75-01-4	Vinyl Chloride	0.52	U	0.52	0.52	5.2	ug/Kg
74-83-9	Bromomethane	1	U	1	1	5.2	ug/Kg
75-00-3	Chloroethane	0.52	U	0.52	0.52	5.2	ug/Kg
75-69-4	Trichlorofluoromethane	0.52	U	0.52	0.52	5.2	ug/Kg
76-13-1	1,1,2-Trichlorotrifluoroethane	0.52	U	0.52	0.52	5.2	ug/Kg
75-65-0	Tert butyl alcohol	25.9	U	7.7	25.9	25.9	ug/Kg
75-35-4	1,1-Dichloroethene	0.52	U	0.52	0.52	5.2	ug/Kg
67-64-1	Acetone	2.6	U	2.6	2.6	25.9	ug/Kg
75-15-0	Carbon Disulfide	0.52	U	0.52	0.52	5.2	ug/Kg
1634-04-4	Methyl tert-butyl Ether	0.52	U	0.52	0.52	5.2	ug/Kg
79-20-9	Methyl Acetate	1	U	1	1	5.2	ug/Kg
75-09-2	Methylene Chloride	24.4		0.52	0.52	5.2	ug/Kg
156-60-5	trans-1,2-Dichloroethene	0.52	U	0.52	0.52	5.2	ug/Kg
75-34-3	1,1-Dichloroethane	0.52	U	0.52	0.52	5.2	ug/Kg
110-82-7	Cyclohexane	0.52	U	0.52	0.52	5.2	ug/Kg
78-93-3	2-Butanone	7.8	U	3.2	7.8	25.9	ug/Kg
56-23-5	Carbon Tetrachloride	0.52	U	0.52	0.52	5.2	ug/Kg
156-59-2	cis-1,2-Dichloroethene	0.52	U	0.52	0.52	5.2	ug/Kg
74-97-5	Bromochloromethane	0.52	U	0.52	0.52	5.2	ug/Kg
67-66-3	Chloroform	0.52	U	0.52	0.52	5.2	ug/Kg
71-55-6	1,1,1-Trichloroethane	0.52	U	0.52	0.52	5.2	ug/Kg
108-87-2	Methylcyclohexane	0.52	U	0.52	0.52	5.2	ug/Kg
71-43-2	Benzene	0.52	U	0.39	0.52	5.2	ug/Kg
107-06-2	1,2-Dichloroethane	0.52	U	0.52	0.52	5.2	ug/Kg
79-01-6	Trichloroethene	0.52	U	0.52	0.52	5.2	ug/Kg
78-87-5	1,2-Dichloropropane	0.52	U	0.27	0.52	5.2	ug/Kg
75-27-4	Bromodichloromethane	0.52	U	0.52	0.52	5.2	ug/Kg
108-10-1	4-Methyl-2-Pentanone	2.6	U	2.6	2.6	25.9	ug/Kg
108-88-3	Toluene	0.52	U	0.52	0.52	5.2	ug/Kg
10061-02-6	t-1,3-Dichloropropene	0.52	U	0.52	0.52	5.2	ug/Kg

CHEMTECH 284 Sheffield Street, Mountainside, NJ 07092 Phone: 908 789 8900 Fax: 908 789 8922

Report of Analysis

Client:	LiRo Engineers, Inc.	Date Collected:	06/19/17
Project:	DDC OEGS - Cross Island Pkwy Storm Extension	Date Received:	06/20/17
Client Sample ID:	SB-02-7.5-8.0	SDG No.:	I3799
Lab Sample ID:	I3799-01	Matrix:	SOIL
Analytical Method:	SW8260	% Moisture:	3.4
Sample Wt/Vol:	5 Units: g	Final Vol:	5000 uL
Soil Aliquot Vol:	uL	Test:	VOCMS Group1
GC Column:	RTX-VMS ID : 0.18	Level :	LOW

File ID/Qc Batch:	Dilution:	Prep Date	Date Analyzed	Prep Batch ID
VF053135.D	1		06/22/17 20:06	VF062217

CAS Number	Parameter	Conc.	Qualifier	MDL	LOD	LOQ / CRQL	Units(Dry Weight)
10061-01-5	cis-1,3-Dichloropropene	0.52	U	0.52	0.52	5.2	ug/Kg
79-00-5	1,1,2-Trichloroethane	1	U	0.93	1	5.2	ug/Kg
591-78-6	2-Hexanone	2.6	U	2.6	2.6	25.9	ug/Kg
124-48-1	Dibromochloromethane	0.52	U	0.52	0.52	5.2	ug/Kg
106-93-4	1,2-Dibromoethane	0.52	U	0.52	0.52	5.2	ug/Kg
127-18-4	Tetrachloroethene	0.52	U	0.52	0.52	5.2	ug/Kg
108-90-7	Chlorobenzene	0.52	U	0.52	0.52	5.2	ug/Kg
100-41-4	Ethyl Benzene	0.52	U	0.52	0.52	5.2	ug/Kg
179601-23-1	m/p-Xylenes	1	U	0.75	1	10.4	ug/Kg
95-47-6	o-Xylene	0.52	U	0.52	0.52	5.2	ug/Kg
100-42-5	Styrene	0.52	U	0.47	0.52	5.2	ug/Kg
75-25-2	Bromoform	1.6	U	0.77	1.6	5.2	ug/Kg
98-82-8	Isopropylbenzene	0.52	U	0.5	0.52	5.2	ug/Kg
79-34-5	1,1,2,2-Tetrachloroethane	0.52	U	0.48	0.52	5.2	ug/Kg
541-73-1	1,3-Dichlorobenzene	0.52	U	0.38	0.52	5.2	ug/Kg
106-46-7	1,4-Dichlorobenzene	0.52	U	0.42	0.52	5.2	ug/Kg
95-50-1	1,2-Dichlorobenzene	0.52	U	0.52	0.52	5.2	ug/Kg
96-12-8	1,2-Dibromo-3-Chloropropane	5.2	U	0.9	5.2	5.2	ug/Kg
120-82-1	1,2,4-Trichlorobenzene	0.52	U	0.52	0.52	5.2	ug/Kg
87-61-6	1,2,3-Trichlorobenzene	1	U	0.52	1	5.2	ug/Kg
SURROGATES							
17060-07-0	1,2-Dichloroethane-d4	42		56 - 120		84%	SPK: 50
1868-53-7	Dibromofluoromethane	52.4		57 - 135		105%	SPK: 50
2037-26-5	Toluene-d8	49.4		67 - 123		99%	SPK: 50
460-00-4	4-Bromofluorobenzene	47.4		33 - 141		95%	SPK: 50
INTERNAL STANDARDS							
363-72-4	Pentafluorobenzene	384711	4.82				
540-36-3	1,4-Difluorobenzene	693077	5.55				
3114-55-4	Chlorobenzene-d5	640048	9.71				
855-82-1	1,4-Dichlorobenzene-d4	282318	12.5				

CHEMTECH 284 Sheffield Street, Mountainside, NJ 07092 Phone: 908 789 8900 Fax: 908 789 8922

Report of Analysis

Client:	LiRo Engineers, Inc.	Date Collected:	06/19/17
Project:	DDC OEGS - Cross Island Pkwy Storm Extension	Date Received:	06/20/17
Client Sample ID:	SB-02-7.5-8.0	SDG No.:	I3799
Lab Sample ID:	I3799-01	Matrix:	SOIL
Analytical Method:	SW8260	% Moisture:	3.4
Sample Wt/Vol:	5 Units: g	Final Vol:	5000 uL
Soil Aliquot Vol:	uL	Test:	VOCMS Group1
GC Column:	RTX-VMS ID : 0.18	Level :	LOW

File ID/Qc Batch:	Dilution:	Prep Date	Date Analyzed	Prep Batch ID
VF053135.D	1		06/22/17 20:06	VF062217

CAS Number	Parameter	Conc.	Qualifier	MDL	LOD	LOQ / CRQL	Units

U = Not Detected
LOQ = Limit of Quantitation
MDL = Method Detection Limit
LOD = Limit of Detection
E = Value Exceeds Calibration Range
Q = indicates LCS control criteria did not meet requirements
M = MS/MSD acceptance criteria did not meet requirements

J = Estimated Value
B = Analyte Found in Associated Method Blank
N = Presumptive Evidence of a Compound
* = Values outside of QC limits
D = Dilution
() = Laboratory InHouse Limit

CHEMTECH 284 Sheffield Street, Mountainside, NJ 07092 Phone: 908 789 8900 Fax: 908 789 8922

Report of Analysis

Client:	LiRo Engineers, Inc.	Date Collected:	06/19/17
Project:	DDC OEGS - Cross Island Pkwy Storm Extension	Date Received:	06/20/17
Client Sample ID:	SB-02-COMP	SDG No.:	I3799
Lab Sample ID:	I3799-02	Matrix:	SOIL
Analytical Method:	8015B DRO	% Moisture:	5.5 Decanted:
Sample Wt/Vol:	30.11 Units: g	Final Vol:	1 mL
Soil Aliquot Vol:	uL	Test:	Diesel Range Organics
Extraction Type:		Injection Volume	
GPC Factor :	PH :		

File ID/Qc Batch:	Dilution:	Prep Date	Date Analyzed	Prep Batch ID
FD015472.D	1	06/21/17 08:56	06/22/17 0:13	PB99998

CAS Number	Parameter	Conc.	Qualifier	MDL	LOD	LOQ / CRQL	Units(Dry Weight)
TARGETS							
DRO	DRO	5131		879	880	1760	ug/kg
SURROGATES							
16416-32-3	Tetracosane-d50	14.5		37 - 130		72%	SPK: 20

Comments:

U = Not Detected
LOQ = Limit of Quantitation
MDL = Method Detection Limit
LOD = Limit of Detection
E = Value Exceeds Calibration Range
P = Indicates >25% difference for detected concentrations between the two GC columns
Q = indicates LCS control criteria did not meet requirements
M = MS/MSD acceptance criteria did not meet requirements

J = Estimated Value
B = Analyte Found in Associated Method Blank
N = Presumptive Evidence of a Compound
* = Values outside of QC limits
D = Dilution
S = Indicates estimated value where valid five-point calibration was not performed prior to analyte detection in sample.
() = Laboratory InHouse Limit

CHEMTECH 284 Sheffield Street, Mountainside, NJ 07092 Phone: 908 789 8900 Fax: 908 789 8922

Report of Analysis

Client:	LiRo Engineers, Inc.	Date Collected:	06/19/17
Project:	DDC OEGS - Cross Island Pkwy Storm Extension	Date Received:	06/20/17
Client Sample ID:	SB-02-COMP	SDG No.:	I3799
Lab Sample ID:	I3799-02	Matrix:	SOIL
Analytical Method:	8015B GRO	% Moisture:	5.5 Decanted:
Sample Wt/Vol:	5.03 Units: g	Final Vol:	5 mL
Soil Aliquot Vol:	uL	Test:	Gasoline Range Organics
Extraction Type:		Injection Volume :	
GPC Factor :	PH :		

File ID/Qc Batch:	Dilution:	Date Analyzed	Prep Batch ID
FB009692.D	1	06/24/17 22:05	FB062417

CAS Number	Parameter	Conc.	Qualifier	MDL	LOD	LOQ / CRQL	Units(Dry Weight)
TARGETS							
GRO	GRO	23.5	U	13	23.5	47	ug/kg
SURROGATES							
98-08-8	Alpha,Alpha,Alpha-Trifluoroto	17		50 - 150		85%	SPK: 20

Comments:

U = Not Detected
LOQ = Limit of Quantitation
MDL = Method Detection Limit
LOD = Limit of Detection
E = Value Exceeds Calibration Range
P = Indicates >25% difference for detected concentrations between the two GC columns
Q = indicates LCS control criteria did not meet requirements
M = MS/MSD acceptance criteria did not meet requirements

J = Estimated Value
B = Analyte Found in Associated Method Blank
N = Presumptive Evidence of a Compound
* = Values outside of QC limits
D = Dilution
S = Indicates estimated value where valid five-point calibration was not performed prior to analyte detection in sample.
() = Laboratory InHouse Limit

CHEMTECH 284 Sheffield Street, Mountainside, NJ 07092 Phone: 908 789 8900 Fax: 908 789 8922

Report of Analysis

Client:	LiRo Engineers, Inc.	Date Collected:	06/19/17 10:45
Project:	DDC OEGS - Cross Island Pkwy Storm Extension	Date Received:	06/20/17
Client Sample ID:	SB-02-COMP	SDG No.:	I3799
Lab Sample ID:	I3799-02	Matrix:	SOIL
		% Solid:	94.5

Parameter	Conc.	Qua.	DF	MDL	LOD	LOQ / CRQL	Units	Prep Date	Date Ana.	Ana Met.
Paint Filter	1	U	1	1	1	1	ml/100gm		06/21/17 11:45	9095A

Comments:

U = Not Detected
LOQ = Limit of Quantitation
MDL = Method Detection Limit
LOD = Limit of Detection
D = Dilution
Q = indicates LCS control criteria did not meet requirements
H = Sample Analysis Out Of Hold Time

J = Estimated Value
B = Analyte Found in Associated Method Blank
* = indicates the duplicate analysis is not within control limits.
E = Indicates the reported value is estimated because of the presence of interference.
OR = Over Range
N =Spiked sample recovery not within control limits

CHEMTECH 284 Sheffield Street, Mountainside, NJ 07092 Phone: 908 789 8900 Fax: 908 789 8922

Report of Analysis

Client:	LiRo Engineers, Inc.	Date Collected:	06/19/17
Project:	DDC OEGS - Cross Island Pkwy Storm Extension	Date Received:	06/20/17
Client Sample ID:	SB-03-9.5-10.0	SDG No.:	I3799
Lab Sample ID:	I3799-03	Matrix:	SOIL
Level (low/med):	low	% Solid:	96

Cas	Parameter	Conc.	Qua.	DF	MDL	LOD	LOQ / CRQL	Units(Dry Weight)	Prep Date	Date Ana.	Ana Met.
7429-90-5	Aluminum	3280		1	0.714	1.06	4.25	mg/Kg	06/21/17 09:47	06/22/17 12:53	SW6010
7440-36-0	Antimony	0.531	UN	1	0.476	0.531	2.13	mg/Kg	06/21/17 09:47	06/22/17 12:53	SW6010
7440-38-2	Arsenic	1.03		1	0.213	0.213	0.85	mg/Kg	06/21/17 09:47	06/22/17 12:53	SW6010
7440-39-3	Barium	12.3	N	1	0.34	1.06	4.25	mg/Kg	06/21/17 09:47	06/22/17 12:53	SW6010
7440-41-7	Beryllium	0.136	J	1	0.051	0.064	0.255	mg/Kg	06/21/17 09:47	06/22/17 12:53	SW6010
7440-43-9	Cadmium	0.064	U	1	0.051	0.064	0.255	mg/Kg	06/21/17 09:47	06/22/17 12:53	SW6010
7440-70-2	Calcium	215		1	0.91	21.3	85	mg/Kg	06/21/17 09:47	06/22/17 12:53	SW6010
7440-47-3	Chromium	9.26		1	0.106	0.106	0.425	mg/Kg	06/21/17 09:47	06/22/17 12:53	SW6010
7440-48-4	Cobalt	4.1		1	0.319	0.319	1.28	mg/Kg	06/21/17 09:47	06/22/17 12:53	SW6010
7440-50-8	Copper	11.3		1	0.213	0.213	0.85	mg/Kg	06/21/17 09:47	06/22/17 12:53	SW6010
7439-89-6	Iron	10300		1	1.06	1.06	4.25	mg/Kg	06/21/17 09:47	06/22/17 12:53	SW6010
7439-92-1	Lead	4.17		1	0.102	0.213	0.51	mg/Kg	06/21/17 09:47	06/22/17 12:53	SW6010
7439-95-4	Magnesium	931		1	3.89	21.3	85	mg/Kg	06/21/17 09:47	06/22/17 12:53	SW6010
7439-96-5	Manganese	120		1	0.162	0.213	0.85	mg/Kg	06/21/17 09:47	06/22/17 12:53	SW6010
7439-97-6	Mercury	0.007	U	1	0.007	0.007	0.014	mg/Kg	06/20/17 18:43	06/21/17 18:57	SW7471A
7440-02-0	Nickel	15.1		1	0.391	0.425	1.7	mg/Kg	06/21/17 09:47	06/22/17 12:53	SW6010
7440-09-7	Potassium	399		1	2.98	21.3	85	mg/Kg	06/21/17 09:47	06/22/17 12:53	SW6010
7782-49-2	Selenium	3.46		1	0.213	0.213	0.85	mg/Kg	06/21/17 09:47	06/22/17 12:53	SW6010
7440-22-4	Silver	0.655		1	0.106	0.106	0.425	mg/Kg	06/21/17 09:47	06/22/17 12:53	SW6010
7440-23-5	Sodium	50.1	J	1	2.14	21.3	85	mg/Kg	06/21/17 09:47	06/22/17 12:53	SW6010
7440-28-0	Thallium	0.296	J	1	0.23	0.425	1.7	mg/Kg	06/21/17 09:47	06/22/17 12:53	SW6010
7440-62-2	Vanadium	9.36		1	0.425	0.425	1.7	mg/Kg	06/21/17 09:47	06/22/17 12:53	SW6010
7440-66-6	Zinc	14.9	N	1	0.425	0.425	1.7	mg/Kg	06/21/17 09:47	06/22/17 12:53	SW6010

Color Before:	Brown	Clarity Before:		Texture:	Medium
Color After:	Yellow	Clarity After:		Artifacts:	No
Comments:	METALS-TAL				

U = Not Detected
LOQ = Limit of Quantitation
MDL = Method Detection Limit
LOD = Limit of Detection
D = Dilution
Q = indicates LCS control criteria did not meet requirements

J = Estimated Value
B = Analyte Found in Associated Method Blank
* = indicates the duplicate analysis is not within control limits.
E = Indicates the reported value is estimated because of the presence of interference.
OR = Over Range
N =Spiked sample recovery not within control limits

CHEMTECH 284 Sheffield Street, Mountainside, NJ 07092 Phone: 908 789 8900 Fax: 908 789 8922

Report of Analysis

Client:	LiRo Engineers, Inc.	Date Collected:	06/19/17
Project:	DDC OEGS - Cross Island Pkwy Storm Extension	Date Received:	06/20/17
Client Sample ID:	SB-03-9.5-10.0	SDG No.:	I3799
Lab Sample ID:	I3799-03	Matrix:	SOIL
Analytical Method:	SW8082A	% Moisture:	4 Decanted:
Sample Wt/Vol:	30.06 Units: g	Final Vol:	10000 uL
Soil Aliquot Vol:	uL	Test:	PCB
Extraction Type:		Injection Volume	
GPC Factor :	1.0 PH :		

File ID/Qc Batch:	Dilution:	Prep Date	Date Analyzed	Prep Batch ID
PO035492.D	1	06/21/17 08:13	06/22/17 19:21	PB99995

CAS Number	Parameter	Conc.	Qualifier	MDL	LOD	LOQ / CRQL	Units(Dry Weight)
TARGETS							
12674-11-2	Aroclor-1016	3.5	U	3.5	3.5	17.7	ug/kg
11104-28-2	Aroclor-1221	3.5	U	3.5	3.5	17.7	ug/kg
11141-16-5	Aroclor-1232	3.5	U	3.5	3.5	17.7	ug/kg
53469-21-9	Aroclor-1242	3.5	U	3.5	3.5	17.7	ug/kg
12672-29-6	Aroclor-1248	3.5	U	3.5	3.5	17.7	ug/kg
11097-69-1	Aroclor-1254	3.5	U	1.5	3.5	17.7	ug/kg
37324-23-5	Aroclor-1262	3.5	U	3.5	3.5	17.7	ug/kg
11100-14-4	Aroclor-1268	3.5	U	3.5	3.5	17.7	ug/kg
11096-82-5	Aroclor-1260	3.5	U	3.5	3.5	17.7	ug/kg
SURROGATES							
877-09-8	Tetrachloro-m-xylene	24.7		10 - 166		123%	SPK: 20
2051-24-3	Decachlorobiphenyl	21.7		60 - 125		109%	SPK: 20

Comments:

U = Not Detected
LOQ = Limit of Quantitation
MDL = Method Detection Limit
LOD = Limit of Detection
E = Value Exceeds Calibration Range
P = Indicates >25% difference for detected concentrations between the two GC columns
Q = indicates LCS control criteria did not meet requirements
M = MS/MSD acceptance criteria did not meet requirements

J = Estimated Value
B = Analyte Found in Associated Method Blank
N = Presumptive Evidence of a Compound
* = Values outside of QC limits
D = Dilution
S = Indicates estimated value where valid five-point calibration was not performed prior to analyte detection in sample.
() = Laboratory InHouse Limit

CHEMTECH 284 Sheffield Street, Mountainside, NJ 07092 Phone: 908 789 8900 Fax: 908 789 8922

Report of Analysis

Client:	LiRo Engineers, Inc.	Date Collected:	06/19/17
Project:	DDC OEGS - Cross Island Pkwy Storm Extension	Date Received:	06/20/17
Client Sample ID:	SB-03-9.5-10.0	SDG No.:	I3799
Lab Sample ID:	I3799-03	Matrix:	SOIL
Analytical Method:	SW8081	% Moisture:	4 Decanted:
Sample Wt/Vol:	30.06 Units: g	Final Vol:	10000 uL
Soil Aliquot Vol:	uL	Test:	PESTICIDE Group1
Extraction Type:		Injection Volume :	
GPC Factor :	1.0 PH :		

File ID/Qc Batch:	Dilution:	Prep Date	Date Analyzed	Prep Batch ID
PL026297.D	1	06/21/17 08:16	06/21/17 16:53	PB99996

CAS Number	Parameter	Conc.	Qualifier	MDL	LOD	LOQ / CRQL	Units(Dry Weight)
TARGETS							
319-84-6	alpha-BHC	0.343	U	0.135	0.343	1.8	ug/kg
319-85-7	beta-BHC	0.343	U	0.187	0.343	1.8	ug/kg
319-86-8	delta-BHC	0.343	U	0.104	0.343	1.8	ug/kg
58-89-9	gamma-BHC (Lindane)	0.343	U	0.156	0.343	1.8	ug/kg
76-44-8	Heptachlor	0.343	U	0.146	0.343	1.8	ug/kg
309-00-2	Aldrin	0.343	U	0.104	0.343	1.8	ug/kg
1024-57-3	Heptachlor epoxide	0.343	U	0.166	0.343	1.8	ug/kg
959-98-8	Endosulfan I	0.343	U	0.156	0.343	1.8	ug/kg
60-57-1	Dieldrin	0.343	U	0.135	0.343	1.8	ug/kg
72-55-9	4,4-DDE	0.343	U	0.208	0.343	1.8	ug/kg
72-20-8	Endrin	0.343	U	0.187	0.343	1.8	ug/kg
33213-65-9	Endosulfan II	0.343	U	0.146	0.343	1.8	ug/kg
72-54-8	4,4-DDD	0.343	U	0.177	0.343	1.8	ug/kg
1031-07-8	Endosulfan Sulfate	0.343	U	0.156	0.343	1.8	ug/kg
50-29-3	4,4-DDT	0.343	U	0.146	0.343	1.8	ug/kg
72-43-5	Methoxychlor	0.343	U	0.177	0.343	1.8	ug/kg
53494-70-5	Endrin ketone	0.343	U	0.135	0.343	1.8	ug/kg
7421-93-4	Endrin aldehyde	0.343	U	0.156	0.343	1.8	ug/kg
5103-71-9	alpha-Chlordane	0.343	U	0.146	0.343	1.8	ug/kg
5103-74-2	gamma-Chlordane	0.343	U	0.135	0.343	1.8	ug/kg
8001-35-2	Toxaphene	3.5	U	3.5	3.5	17.7	ug/kg
SURROGATES							
2051-24-3	Decachlorobiphenyl	24.6		10 - 169		123%	SPK: 20
877-09-8	Tetrachloro-m-xylene	21.5		31 - 151		107%	SPK: 20

CHEMTECH 284 Sheffield Street, Mountainside, NJ 07092 Phone: 908 789 8900 Fax: 908 789 8922

Report of Analysis

Client:	LiRo Engineers, Inc.	Date Collected:	06/19/17
Project:	DDC OEGS - Cross Island Pkwy Storm Extension	Date Received:	06/20/17
Client Sample ID:	SB-03-9.5-10.0	SDG No.:	I3799
Lab Sample ID:	I3799-03	Matrix:	SOIL
Analytical Method:	SW8081	% Moisture:	4 Decanted:
Sample Wt/Vol:	30.06 Units: g	Final Vol:	10000 uL
Soil Aliquot Vol:	uL	Test:	PESTICIDE Group1
Extraction Type:		Injection Volume :	
GPC Factor :	1.0 PH :		

File ID/Qc Batch:	Dilution:	Prep Date	Date Analyzed	Prep Batch ID
PL026297.D	1	06/21/17 08:16	06/21/17 16:53	PB99996

CAS Number	Parameter	Conc.	Qualifier	MDL	LOD	LOQ / CRQL	Units

Comments:

U = Not Detected
LOQ = Limit of Quantitation
MDL = Method Detection Limit
LOD = Limit of Detection
E = Value Exceeds Calibration Range
P = Indicates >25% difference for detected concentrations between the two GC columns
Q = indicates LCS control criteria did not meet requirements
M = MS/MSD acceptance criteria did not meet requirements

J = Estimated Value
B = Analyte Found in Associated Method Blank
N = Presumptive Evidence of a Compound
* = Values outside of QC limits
D = Dilution
S = Indicates estimated value where valid five-point calibration was not performed prior to analyte detection in sample.
() = Laboratory InHouse Limit

CHEMTECH 284 Sheffield Street, Mountainside, NJ 07092 Phone: 908 789 8900 Fax: 908 789 8922

Report of Analysis

Client:	LiRo Engineers, Inc.	Date Collected:	06/19/17
Project:	DDC OEGS - Cross Island Pkwy Storm Extension	Date Received:	06/20/17
Client Sample ID:	SB-03-9.5-10.0MS	SDG No.:	I3799
Lab Sample ID:	I3799-03MS	Matrix:	SOIL
Analytical Method:	SW8081	% Moisture:	4 Decanted:
Sample Wt/Vol:	30.08 Units: g	Final Vol:	10000 uL
Soil Aliquot Vol:	uL	Test:	PESTICIDE Group1
Extraction Type:		Injection Volume :	
GPC Factor :	1.0 PH :		

File ID/Qc Batch:	Dilution:	Prep Date	Date Analyzed	Prep Batch ID
PL026305.D	1	06/21/17 08:16	06/21/17 18:47	PB99996

CAS Number	Parameter	Conc.	Qualifier	MDL	LOD	LOQ / CRQL	Units(Dry Weight)
TARGETS							
319-84-6	alpha-BHC	18.4		0.135	0.343	1.8	ug/kg
319-85-7	beta-BHC	18		0.187	0.343	1.8	ug/kg
319-86-8	delta-BHC	13		0.104	0.343	1.8	ug/kg
58-89-9	gamma-BHC (Lindane)	18.5		0.156	0.343	1.8	ug/kg
76-44-8	Heptachlor	18		0.145	0.343	1.8	ug/kg
309-00-2	Aldrin	19.1		0.104	0.343	1.8	ug/kg
1024-57-3	Heptachlor epoxide	19		0.166	0.343	1.8	ug/kg
959-98-8	Endosulfan I	18.1		0.156	0.343	1.8	ug/kg
60-57-1	Dieldrin	19.2		0.135	0.343	1.8	ug/kg
72-55-9	4,4-DDE	18.8		0.208	0.343	1.8	ug/kg
72-20-8	Endrin	17.8		0.187	0.343	1.8	ug/kg
33213-65-9	Endosulfan II	17.8		0.145	0.343	1.8	ug/kg
72-54-8	4,4-DDD	19.4		0.177	0.343	1.8	ug/kg
1031-07-8	Endosulfan Sulfate	17.3		0.156	0.343	1.8	ug/kg
50-29-3	4,4-DDT	18.7		0.145	0.343	1.8	ug/kg
72-43-5	Methoxychlor	18.3		0.177	0.343	1.8	ug/kg
53494-70-5	Endrin ketone	19.9		0.135	0.343	1.8	ug/kg
7421-93-4	Endrin aldehyde	16.3		0.156	0.343	1.8	ug/kg
5103-71-9	alpha-Chlordane	19		0.145	0.343	1.8	ug/kg
5103-74-2	gamma-Chlordane	19.3		0.135	0.343	1.8	ug/kg
8001-35-2	Toxaphene	3.5	U	3.5	3.5	17.7	ug/kg
SURROGATES							
2051-24-3	Decachlorobiphenyl	24.3		10 - 169		122%	SPK: 20
877-09-8	Tetrachloro-m-xylene	21.1		31 - 151		106%	SPK: 20

CHEMTECH 284 Sheffield Street, Mountainside, NJ 07092 Phone: 908 789 8900 Fax: 908 789 8922

Report of Analysis

Client:	LiRo Engineers, Inc.	Date Collected:	06/19/17
Project:	DDC OEGS - Cross Island Pkwy Storm Extension	Date Received:	06/20/17
Client Sample ID:	SB-03-9.5-10.0MS	SDG No.:	I3799
Lab Sample ID:	I3799-03MS	Matrix:	SOIL
Analytical Method:	SW8081	% Moisture:	4 Decanted:
Sample Wt/Vol:	30.08 Units: g	Final Vol:	10000 uL
Soil Aliquot Vol:	uL	Test:	PESTICIDE Group1
Extraction Type:		Injection Volume :	
GPC Factor :	1.0 PH :		

File ID/Qc Batch:	Dilution:	Prep Date	Date Analyzed	Prep Batch ID
PL026305.D	1	06/21/17 08:16	06/21/17 18:47	PB99996

CAS Number	Parameter	Conc.	Qualifier	MDL	LOD	LOQ / CRQL	Units

Comments:

U = Not Detected
LOQ = Limit of Quantitation
MDL = Method Detection Limit
LOD = Limit of Detection
= Value Exceeds Calibration Range
P = Indicates >25% difference for detected concentrations between the two GC columns
Q = indicates LCS control criteria did not meet requirements
M = MS/MSD acceptance criteria did not meet requirements

J = Estimated Value
B = Analyte Found in Associated Method Blank
N = Presumptive Evidence of a Compound
* = Values outside of QC limits
D = Dilution
S = Indicates estimated value where valid five-point calibration was not performed prior to analyte detection in sample.
() = Laboratory InHouse Limit

CHEMTECH 284 Sheffield Street, Mountainside, NJ 07092 Phone: 908 789 8900 Fax: 908 789 8922

Report of Analysis

Client:	LiRo Engineers, Inc.	Date Collected:	06/19/17
Project:	DDC OEGS - Cross Island Pkwy Storm Extension	Date Received:	06/20/17
Client Sample ID:	SB-03-9.5-10.0MSD	SDG No.:	I3799
Lab Sample ID:	I3799-03MSD	Matrix:	SOIL
Analytical Method:	SW8081	% Moisture:	4 Decanted:
Sample Wt/Vol:	30.1 Units: g	Final Vol:	10000 uL
Soil Aliquot Vol:	uL	Test:	PESTICIDE Group1
Extraction Type:		Injection Volume :	
GPC Factor :	1.0 PH :		

File ID/Qc Batch:	Dilution:	Prep Date	Date Analyzed	Prep Batch ID
PL026306.D	1	06/21/17 08:16	06/21/17 19:01	PB99996

CAS Number	Parameter	Conc.	Qualifier	MDL	LOD	LOQ / CRQL	Units(Dry Weight)
TARGETS							
319-84-6	alpha-BHC	18.7		0.135	0.343	1.8	ug/kg
319-85-7	beta-BHC	18		0.187	0.343	1.8	ug/kg
319-86-8	delta-BHC	13		0.104	0.343	1.8	ug/kg
58-89-9	gamma-BHC (Lindane)	18.5		0.156	0.343	1.8	ug/kg
76-44-8	Heptachlor	18		0.145	0.343	1.8	ug/kg
309-00-2	Aldrin	19		0.104	0.343	1.8	ug/kg
1024-57-3	Heptachlor epoxide	18.9		0.166	0.343	1.8	ug/kg
959-98-8	Endosulfan I	18.1		0.156	0.343	1.8	ug/kg
60-57-1	Dieldrin	19.4		0.135	0.343	1.8	ug/kg
72-55-9	4,4-DDE	19		0.208	0.343	1.8	ug/kg
72-20-8	Endrin	18		0.187	0.343	1.8	ug/kg
33213-65-9	Endosulfan II	17.9		0.145	0.343	1.8	ug/kg
72-54-8	4,4-DDD	19.6		0.176	0.343	1.8	ug/kg
1031-07-8	Endosulfan Sulfate	17.6		0.156	0.343	1.8	ug/kg
50-29-3	4,4-DDT	18.8		0.145	0.343	1.8	ug/kg
72-43-5	Methoxychlor	18.5		0.176	0.343	1.8	ug/kg
53494-70-5	Endrin ketone	20.1		0.135	0.343	1.8	ug/kg
7421-93-4	Endrin aldehyde	16.5		0.156	0.343	1.8	ug/kg
5103-71-9	alpha-Chlordane	19		0.145	0.343	1.8	ug/kg
5103-74-2	gamma-Chlordane	19.3		0.135	0.343	1.8	ug/kg
8001-35-2	Toxaphene	3.5	U	3.5	3.5	17.6	ug/kg
SURROGATES							
2051-24-3	Decachlorobiphenyl	23.8		10 - 169		119%	SPK: 20
877-09-8	Tetrachloro-m-xylene	21.4		31 - 151		107%	SPK: 20

CHEMTECH 284 Sheffield Street, Mountainside, NJ 07092 Phone: 908 789 8900 Fax: 908 789 8922

Report of Analysis

Client:	LiRo Engineers, Inc.	Date Collected:	06/19/17
Project:	DDC OEGS - Cross Island Pkwy Storm Extension	Date Received:	06/20/17
Client Sample ID:	SB-03-9.5-10.0MSD	SDG No.:	I3799
Lab Sample ID:	I3799-03MSD	Matrix:	SOIL
Analytical Method:	SW8081	% Moisture:	4 Decanted:
Sample Wt/Vol:	30.1 Units: g	Final Vol:	10000 uL
Soil Aliquot Vol:	uL	Test:	PESTICIDE Group1
Extraction Type:		Injection Volume :	
GPC Factor :	1.0 PH :		

File ID/Qc Batch:	Dilution:	Prep Date	Date Analyzed	Prep Batch ID
PL026306.D	1	06/21/17 08:16	06/21/17 19:01	PB99996

CAS Number	Parameter	Conc.	Qualifier	MDL	LOD	LOQ / CRQL	Units

Comments:

U = Not Detected
LOQ = Limit of Quantitation
MDL = Method Detection Limit
LOD = Limit of Detection
E = Value Exceeds Calibration Range
P = Indicates >25% difference for detected concentrations between the two GC columns
Q = indicates LCS control criteria did not meet requirements
M = MS/MSD acceptance criteria did not meet requirements

J = Estimated Value
B = Analyte Found in Associated Method Blank
N = Presumptive Evidence of a Compound
* = Values outside of QC limits
D = Dilution
S = Indicates estimated value where valid five-point calibration was not performed prior to analyte detection in sample.
() = Laboratory InHouse Limit

CHEMTECH 284 Sheffield Street, Mountainside, NJ 07092 Phone: 908 789 8900 Fax: 908 789 8922

Report of Analysis

Client:	LiRo Engineers, Inc.	Date Collected:	06/19/17
Project:	DDC OEGS - Cross Island Pkwy Storm Extension	Date Received:	06/20/17
Client Sample ID:	SB-03-9.5-10.0	SDG No.:	I3799
Lab Sample ID:	I3799-03	Matrix:	SOIL
Analytical Method:	SW8270	% Moisture:	4
Sample Wt/Vol:	30.08 Units: g	Final Vol:	1000 uL
Soil Aliquot Vol:	uL	Test:	SVOCMS Group1
Extraction Type :	Decanted : N	Level :	LOW
Injection Volume :	GPC Factor : 1.0	GPC Cleanup :	N PH :

File ID/Qc Batch:	Dilution:	Prep Date	Date Analyzed	Prep Batch ID
BG027590.D	1	06/21/17 08:55	06/22/17 11:01	PB99997

CAS Number	Parameter	Conc.	Qualifier	MDL	LOD	LOQ / CRQL	Units(Dry Weight)
TARGETS							
100-52-7	Benzaldehyde	34.6	U	18.1	34.6	340	ug/Kg
108-95-2	Phenol	34.6	U	8	34.6	340	ug/Kg
111-44-4	bis(2-Chloroethyl)ether	34.6	U	16.6	34.6	340	ug/Kg
95-57-8	2-Chlorophenol	34.6	U	18.3	34.6	340	ug/Kg
95-48-7	2-Methylphenol	34.6	U	18.8	34.6	340	ug/Kg
108-60-1	2,2-oxybis(1-Chloropropane)	34.6	U	14.3	34.6	340	ug/Kg
98-86-2	Acetophenone	34.6	U	10.6	34.6	340	ug/Kg
65794-96-9	3+4-Methylphenols	34.6	U	18	34.6	340	ug/Kg
621-64-7	n-Nitroso-di-n-propylamine	34.6	U	17.5	34.6	340	ug/Kg
67-72-1	Hexachloroethane	34.6	U	15.5	34.6	340	ug/Kg
98-95-3	Nitrobenzene	34.6	U	13.1	34.6	340	ug/Kg
78-59-1	Isophorone	34.6	U	11.4	34.6	340	ug/Kg
88-75-5	2-Nitrophenol	34.6	U	16.7	34.6	340	ug/Kg
105-67-9	2,4-Dimethylphenol	34.6	U	19.6	34.6	340	ug/Kg
111-91-1	bis(2-Chloroethoxy)methane	34.6	U	19.9	34.6	340	ug/Kg
120-83-2	2,4-Dichlorophenol	34.6	U	13.2	34.6	340	ug/Kg
91-20-3	Naphthalene	34.6	U	11.9	34.6	340	ug/Kg
106-47-8	4-Chloroaniline	34.6	U	24.4	34.6	340	ug/Kg
87-68-3	Hexachlorobutadiene	34.6	U	12.6	34.6	340	ug/Kg
105-60-2	Caprolactam	69.3	U	16.1	69.3	340	ug/Kg
59-50-7	4-Chloro-3-methylphenol	34.6	U	15.4	34.6	340	ug/Kg
91-57-6	2-Methylnaphthalene	34.6	U	8.7	34.6	340	ug/Kg
77-47-4	Hexachlorocyclopentadiene	34.6	U	8.4	34.6	340	ug/Kg
88-06-2	2,4,6-Trichlorophenol	34.6	U	10.6	34.6	340	ug/Kg
95-95-4	2,4,5-Trichlorophenol	34.6	U	24.3	34.6	340	ug/Kg
92-52-4	1,1-Biphenyl	34.6	U	13.1	34.6	340	ug/Kg
91-58-7	2-Chloronaphthalene	34.6	U	7.9	34.6	340	ug/Kg
88-74-4	2-Nitroaniline	34.6	U	15.4	34.6	340	ug/Kg
131-11-3	Dimethylphthalate	220	J	9.4	34.6	340	ug/Kg
208-96-8	Acenaphthylene	34.6	U	8.7	34.6	340	ug/Kg
606-20-2	2,6-Dinitrotoluene	34.6	U	14.1	34.6	340	ug/Kg

CHEMTECH 284 Sheffield Street, Mountainside, NJ 07092 Phone: 908 789 8900 Fax: 908 789 8922

Report of Analysis

Client:	LiRo Engineers, Inc.	Date Collected:	06/19/17
Project:	DDC OEGS - Cross Island Pkwy Storm Extension	Date Received:	06/20/17
Client Sample ID:	SB-03-9.5-10.0	SDG No.:	I3799
Lab Sample ID:	I3799-03	Matrix:	SOIL
Analytical Method:	SW8270	% Moisture:	4
Sample Wt/Vol:	30.08 Units: g	Final Vol:	1000 uL
Soil Aliquot Vol:	uL	Test:	SVOCMS Group1
Extraction Type :	Decanted : N	Level :	LOW
Injection Volume :	GPC Factor : 1.0	GPC Cleanup :	N PH :

File ID/Qc Batch:	Dilution:	Prep Date	Date Analyzed	Prep Batch ID
BG027590.D	1	06/21/17 08:55	06/22/17 11:01	PB99997

CAS Number	Parameter	Conc.	Qualifier	MDL	LOD	LOQ / CRQL	Units(Dry Weight)
99-09-2	3-Nitroaniline	69.3	U	22.2	69.3	340	ug/Kg
83-32-9	Acenaphthene	34.6	U	9.8	34.6	340	ug/Kg
51-28-5	2,4-Dinitrophenol	280	U	35.2	280	340	ug/Kg
100-02-7	4-Nitrophenol	170	U	64.3	170	340	ug/Kg
132-64-9	Dibenzofuran	34.6	U	13.5	34.6	340	ug/Kg
121-14-2	2,4-Dinitrotoluene	34.6	U	10.4	34.6	340	ug/Kg
84-66-2	Diethylphthalate	34.6	U	5.4	34.6	340	ug/Kg
7005-72-3	4-Chlorophenyl-phenylether	34.6	U	18.8	34.6	340	ug/Kg
86-73-7	Fluorene	34.6	U	13.1	34.6	340	ug/Kg
100-01-6	4-Nitroaniline	69.3	U	45.1	69.3	340	ug/Kg
534-52-1	4,6-Dinitro-2-methylphenol	170	U	19.8	170	340	ug/Kg
86-30-6	n-Nitrosodiphenylamine	34.6	U	8.3	34.6	340	ug/Kg
101-55-3	4-Bromophenyl-phenylether	34.6	U	6.8	34.6	340	ug/Kg
118-74-1	Hexachlorobenzene	34.6	U	14.1	34.6	340	ug/Kg
1912-24-9	Atrazine	34.6	U	18.3	34.6	340	ug/Kg
87-86-5	Pentachlorophenol	34.6	U	23.7	34.6	340	ug/Kg
85-01-8	Phenanthrene	34.6	U	9.4	34.6	340	ug/Kg
120-12-7	Anthracene	34.6	U	7.1	34.6	340	ug/Kg
86-74-8	Carbazole	34.6	U	7.6	34.6	340	ug/Kg
84-74-2	Di-n-butylphthalate	34.6	U	27.2	34.6	340	ug/Kg
206-44-0	Fluoranthene	34.6	U	7	34.6	340	ug/Kg
129-00-0	Pyrene	34.6	U	8.3	34.6	340	ug/Kg
85-68-7	Butylbenzylphthalate	34.6	U	16.6	34.6	340	ug/Kg
91-94-1	3,3-Dichlorobenzidine	34.6	U	22.2	34.6	340	ug/Kg
56-55-3	Benzo(a)anthracene	34.6	U	16.5	34.6	340	ug/Kg
218-01-9	Chrysene	34.6	U	15.7	34.6	340	ug/Kg
117-81-7	Bis(2-ethylhexyl)phthalate	34.6	U	12.3	34.6	340	ug/Kg
117-84-0	Di-n-octyl phthalate	34.6	U	3.9	34.6	340	ug/Kg
205-99-2	Benzo(b)fluoranthene	34.6	U	11.3	34.6	340	ug/Kg
207-08-9	Benzo(k)fluoranthene	34.6	U	16.3	34.6	340	ug/Kg
50-32-8	Benzo(a)pyrene	34.6	U	7.5	34.6	340	ug/Kg
193-39-5	Indeno(1,2,3-cd)pyrene	34.6	U	11.5	34.6	340	ug/Kg
53-70-3	Dibenzo(a,h)anthracene	34.6	U	10	34.6	340	ug/Kg

CHEMTECH 284 Sheffield Street, Mountainside, NJ 07092 Phone: 908 789 8900 Fax: 908 789 8922

Report of Analysis

Client:	LiRo Engineers, Inc.	Date Collected:	06/19/17
Project:	DDC OEGS - Cross Island Pkwy Storm Extension	Date Received:	06/20/17
Client Sample ID:	SB-03-9.5-10.0	SDG No.:	I3799
Lab Sample ID:	I3799-03	Matrix:	SOIL
Analytical Method:	SW8270	% Moisture:	4
Sample Wt/Vol:	30.08 Units: g	Final Vol:	1000 uL
Soil Aliquot Vol:	uL	Test:	SVOCMS Group1
Extraction Type :	Decanted : N	Level :	LOW
Injection Volume :	GPC Factor : 1.0	GPC Cleanup :	N PH :

File ID/Qc Batch:	Dilution:	Prep Date	Date Analyzed	Prep Batch ID
BG027590.D	1	06/21/17 08:55	06/22/17 11:01	PB99997

CAS Number	Parameter	Conc.	Qualifier	MDL	LOD	LOQ / CRQL	Units(Dry Weight)
191-24-2	Benzo(g,h,i)perylene	34.6	U	14	34.6	340	ug/Kg
95-94-3	1,2,4,5-Tetrachlorobenzene	34.6	U	13.6	34.6	340	ug/Kg
123-91-1	1,4-Dioxane	69.3	U	13.6	69.3	340	ug/Kg
58-90-2	2,3,4,6-Tetrachlorophenol	34.6	U	13.6	34.6	340	ug/Kg
SURROGATES							
367-12-4	2-Fluorophenol	110		28 - 127		71%	SPK: 150
13127-88-3	Phenol-d6	100		34 - 127		68%	SPK: 150
4165-60-0	Nitrobenzene-d5	68.5		31 - 132		69%	SPK: 100
321-60-8	2-Fluorobiphenyl	68.4		39 - 123		68%	SPK: 100
118-79-6	2,4,6-Tribromophenol	120		30 - 133		78%	SPK: 150
1718-51-0	Terphenyl-d14	76.1		37 - 115		76%	SPK: 100
INTERNAL STANDARDS							
3855-82-1	1,4-Dichlorobenzene-d4	22286	8.51				
1146-65-2	Naphthalene-d8	103337	11.32				
15067-26-2	Acenaphthene-d10	66564	15.09				
1517-22-2	Phenanthrene-d10	194058	17.84				
1719-03-5	Chrysene-d12	210513	22.2				
1520-96-3	Perylene-d12	204508	25.84				

U = Not Detected
LOQ = Limit of Quantitation
MDL = Method Detection Limit
LOD = Limit of Detection
E = Value Exceeds Calibration Range
Q = indicates LCS control criteria did not meet requirements
M = MS/MSD acceptance criteria did not meet requirements

J = Estimated Value
B = Analyte Found in Associated Method Blank
N = Presumptive Evidence of a Compound
* = Values outside of QC limits
D = Dilution
() = Laboratory InHouse Limit

CHEMTECH 284 Sheffield Street, Mountainside, NJ 07092 Phone: 908 789 8900 Fax: 908 789 8922

Report of Analysis

Client:	LiRo Engineers, Inc.	Date Collected:	06/19/17
Project:	DDC OEGS - Cross Island Pkwy Storm Extension	Date Received:	06/20/17
Client Sample ID:	SB-03-9.5-10.0	SDG No.:	I3799
Lab Sample ID:	I3799-03	Matrix:	SOIL
Analytical Method:	SW8260	% Moisture:	4
Sample Wt/Vol:	4.98 Units: g	Final Vol:	5000 uL
Soil Aliquot Vol:	uL	Test:	VOCMS Group1
GC Column:	RTX-VMS ID : 0.18	Level :	LOW

File ID/Qc Batch:	Dilution:	Prep Date	Date Analyzed	Prep Batch ID
VF053136.D	1		06/22/17 20:35	VF062217

CAS Number	Parameter	Conc.	Qualifier	MDL	LOD	LOQ / CRQL	Units(Dry Weight)
TARGETS							
75-71-8	Dichlorodifluoromethane	0.52	U	0.52	0.52	5.2	ug/Kg
74-87-3	Chloromethane	0.52	U	0.52	0.52	5.2	ug/Kg
75-01-4	Vinyl Chloride	0.52	U	0.52	0.52	5.2	ug/Kg
74-83-9	Bromomethane	1	U	1	1	5.2	ug/Kg
75-00-3	Chloroethane	0.52	U	0.52	0.52	5.2	ug/Kg
75-69-4	Trichlorofluoromethane	0.52	U	0.52	0.52	5.2	ug/Kg
76-13-1	1,1,2-Trichlorotrifluoroethane	0.52	U	0.52	0.52	5.2	ug/Kg
75-65-0	Tert butyl alcohol	26.1	U	7.7	26.1	26.1	ug/Kg
75-35-4	1,1-Dichloroethene	0.52	U	0.52	0.52	5.2	ug/Kg
67-64-1	Acetone	2.6	U	2.6	2.6	26.1	ug/Kg
75-15-0	Carbon Disulfide	0.52	U	0.52	0.52	5.2	ug/Kg
1634-04-4	Methyl tert-butyl Ether	0.52	U	0.52	0.52	5.2	ug/Kg
79-20-9	Methyl Acetate	1	U	1	1	5.2	ug/Kg
75-09-2	Methylene Chloride	15.6		0.52	0.52	5.2	ug/Kg
156-60-5	trans-1,2-Dichloroethene	0.52	U	0.52	0.52	5.2	ug/Kg
75-34-3	1,1-Dichloroethane	0.52	U	0.52	0.52	5.2	ug/Kg
110-82-7	Cyclohexane	0.52	U	0.52	0.52	5.2	ug/Kg
78-93-3	2-Butanone	7.8	U	3.3	7.8	26.1	ug/Kg
56-23-5	Carbon Tetrachloride	0.52	U	0.52	0.52	5.2	ug/Kg
156-59-2	cis-1,2-Dichloroethene	0.52	U	0.52	0.52	5.2	ug/Kg
74-97-5	Bromochloromethane	0.52	U	0.52	0.52	5.2	ug/Kg
67-66-3	Chloroform	0.52	U	0.52	0.52	5.2	ug/Kg
71-55-6	1,1,1-Trichloroethane	0.52	U	0.52	0.52	5.2	ug/Kg
108-87-2	Methylcyclohexane	0.52	U	0.52	0.52	5.2	ug/Kg
71-43-2	Benzene	0.52	U	0.4	0.52	5.2	ug/Kg
107-06-2	1,2-Dichloroethane	0.52	U	0.52	0.52	5.2	ug/Kg
79-01-6	Trichloroethene	0.52	U	0.52	0.52	5.2	ug/Kg
78-87-5	1,2-Dichloropropane	0.52	U	0.27	0.52	5.2	ug/Kg
5-27-4	Bromodichloromethane	0.52	U	0.52	0.52	5.2	ug/Kg
108-10-1	4-Methyl-2-Pentanone	2.6	U	2.6	2.6	26.1	ug/Kg
108-88-3	Toluene	0.52	U	0.52	0.52	5.2	ug/Kg
10061-02-6	t-1,3-Dichloropropene	0.52	U	0.52	0.52	5.2	ug/Kg

CHEMTECH 284 Sheffield Street, Mountainside, NJ 07092 Phone: 908 789 8900 Fax: 908 789 8922

Report of Analysis

Client:	LiRo Engineers, Inc.	Date Collected:	06/19/17
Project:	DDC OEGS - Cross Island Pkwy Storm Extension	Date Received:	06/20/17
Client Sample ID:	SB-03-9.5-10.0	SDG No.:	I3799
Lab Sample ID:	I3799-03	Matrix:	SOIL
Analytical Method:	SW8260	% Moisture:	4
Sample Wt/Vol:	4.98 Units: g	Final Vol:	5000 uL
Soil Aliquot Vol:	uL	Test:	VOCMS Group1
GC Column:	RTX-VMS ID : 0.18	Level :	LOW

File ID/Qc Batch:	Dilution:	Prep Date	Date Analyzed	Prep Batch ID
VF053136.D	1		06/22/17 20:35	VF062217

CAS Number	Parameter	Conc.	Qualifier	MDL	LOD	LOQ / CRQL	Units(Dry Weight)
10061-01-5	cis-1,3-Dichloropropene	0.52	U	0.52	0.52	5.2	ug/Kg
79-00-5	1,1,2-Trichloroethane	1	U	0.94	1	5.2	ug/Kg
591-78-6	2-Hexanone	2.6	U	2.6	2.6	26.1	ug/Kg
124-48-1	Dibromochloromethane	0.52	U	0.52	0.52	5.2	ug/Kg
106-93-4	1,2-Dibromoethane	0.52	U	0.52	0.52	5.2	ug/Kg
127-18-4	Tetrachloroethene	0.52	U	0.52	0.52	5.2	ug/Kg
108-90-7	Chlorobenzene	0.52	U	0.52	0.52	5.2	ug/Kg
100-41-4	Ethyl Benzene	0.52	U	0.52	0.52	5.2	ug/Kg
179601-23-1	m/p-Xylenes	1	U	0.75	1	10.5	ug/Kg
95-47-6	o-Xylene	0.52	U	0.52	0.52	5.2	ug/Kg
100-42-5	Styrene	0.52	U	0.47	0.52	5.2	ug/Kg
75-25-2	Bromoform	1.6	U	0.77	1.6	5.2	ug/Kg
98-82-8	Isopropylbenzene	0.52	U	0.5	0.52	5.2	ug/Kg
79-34-5	1,1,2,2-Tetrachloroethane	0.52	U	0.48	0.52	5.2	ug/Kg
541-73-1	1,3-Dichlorobenzene	0.52	U	0.39	0.52	5.2	ug/Kg
106-46-7	1,4-Dichlorobenzene	0.52	U	0.43	0.52	5.2	ug/Kg
95-50-1	1,2-Dichlorobenzene	0.52	U	0.52	0.52	5.2	ug/Kg
96-12-8	1,2-Dibromo-3-Chloropropane	5.2	U	0.91	5.2	5.2	ug/Kg
120-82-1	1,2,4-Trichlorobenzene	0.52	U	0.52	0.52	5.2	ug/Kg
87-61-6	1,2,3-Trichlorobenzene	1	U	0.52	1	5.2	ug/Kg
SURROGATES							
17060-07-0	1,2-Dichloroethane-d4	39.6		56 - 120		79%	SPK: 50
1868-53-7	Dibromofluoromethane	46.7		57 - 135		93%	SPK: 50
2037-26-5	Toluene-d8	44.4		67 - 123		89%	SPK: 50
460-00-4	4-Bromofluorobenzene	41.9		33 - 141		84%	SPK: 50
INTERNAL STANDARDS							
363-72-4	Pentafluorobenzene	379169	4.82				
540-36-3	1,4-Difluorobenzene	705522	5.54				
3114-55-4	Chlorobenzene-d5	616667	9.71				
3855-82-1	1,4-Dichlorobenzene-d4	280179	12.5				

CHEMTECH 284 Sheffield Street, Mountainside, NJ 07092 Phone: 908 789 8900 Fax: 908 789 8922

Report of Analysis

Client:	LiRo Engineers, Inc.	Date Collected:	06/19/17
Project:	DDC OEGS - Cross Island Pkwy Storm Extension	Date Received:	06/20/17
Client Sample ID:	SB-03-9.5-10.0	SDG No.:	I3799
Lab Sample ID:	I3799-03	Matrix:	SOIL
Analytical Method:	SW8260	% Moisture:	4
Sample Wt/Vol:	4.98 Units: g	Final Vol:	5000 uL
Soil Aliquot Vol:	uL	Test:	VOCMS Group1
GC Column:	RTX-VMS ID : 0.18	Level :	LOW

File ID/Qc Batch:	Dilution:	Prep Date	Date Analyzed	Prep Batch ID
VF053136.D	1		06/22/17 20:35	VF062217

CAS Number	Parameter	Conc.	Qualifier	MDL	LOD	LOQ / CRQL	Units

U = Not Detected
LOQ = Limit of Quantitation
MDL = Method Detection Limit
LOD = Limit of Detection
E = Value Exceeds Calibration Range
Q = indicates LCS control criteria did not meet requirements
M = MS/MSD acceptance criteria did not meet requirements

J = Estimated Value
B = Analyte Found in Associated Method Blank
N = Presumptive Evidence of a Compound
* = Values outside of QC limits
D = Dilution
() = Laboratory InHouse Limit

CHEMTECH 284 Sheffield Street, Mountainside, NJ 07092 Phone: 908 789 8900 Fax: 908 789 8922

Report of Analysis

Client:	LiRo Engineers, Inc.	Date Collected:	06/19/17
Project:	DDC OEGS - Cross Island Pkwy Storm Extension	Date Received:	06/20/17
Client Sample ID:	SB-03-COMP	SDG No.:	I3799
Lab Sample ID:	I3799-04	Matrix:	SOIL
Analytical Method:	8015B DRO	% Moisture:	10.1 Decanted:
Sample Wt/Vol:	30.06 Units: g	Final Vol:	1 mL
Soil Aliquot Vol:	uL	Test:	Diesel Range Organics
Extraction Type:		Injection Volume	
GPC Factor :	PH :		

File ID/Qc Batch:	Dilution:	Prep Date	Date Analyzed	Prep Batch ID
FD015466.D	1	06/21/17 08:56	06/21/17 20:36	PB99998

CAS Number	Parameter	Conc.	Qualifier	MDL	LOD	LOQ / CRQL	Units(Dry Weight)
TARGETS							
DRO	DRO	4737		925	925	1850	ug/kg
SURROGATES							
16416-32-3	Tetracosane-d50	13.8		37 - 130		69%	SPK: 20

Comments:

U = Not Detected
LOQ = Limit of Quantitation
MDL = Method Detection Limit
LOD = Limit of Detection
E = Value Exceeds Calibration Range
P = Indicates >25% difference for detected concentrations between the two GC columns
Q = indicates LCS control criteria did not meet requirements
M = MS/MSD acceptance criteria did not meet requirements

J = Estimated Value
B = Analyte Found in Associated Method Blank
N = Presumptive Evidence of a Compound
* = Values outside of QC limits
D = Dilution
S = Indicates estimated value where valid five-point calibration was not performed prior to analyte detection in sample.
() = Laboratory InHouse Limit

CHEMTECH 284 Sheffield Street, Mountainside, NJ 07092 Phone: 908 789 8900 Fax: 908 789 8922

Report of Analysis

Client:	LiRo Engineers, Inc.	Date Collected:	06/19/17
Project:	DDC OEGS - Cross Island Pkwy Storm Extension	Date Received:	06/20/17
Client Sample ID:	SB-03-COMPMS	SDG No.:	I3799
Lab Sample ID:	I3799-04MS	Matrix:	SOIL
Analytical Method:	8015B DRO	% Moisture:	10.1 Decanted:
Sample Wt/Vol:	30.12 Units: g	Final Vol:	1 mL
Soil Aliquot Vol:	uL	Test:	Diesel Range Organics
Extraction Type:		Injection Volume	
GPC Factor :	PH :		

File ID/Qc Batch:	Dilution:	Prep Date	Date Analyzed	Prep Batch ID
FD015473.D	1	06/21/17 08:56	06/22/17 0:48	PB99998

CAS Number	Parameter	Conc.	Qualifier	MDL	LOD	LOQ / CRQL	Units(Dry Weight)
TARGETS							
DRO	DRO	8642		923	925	1850	ug/kg
SURROGATES							
16416-32-3	Tetracosane-d50	11.5		37 - 130		58%	SPK: 20

Comments:

U = Not Detected
LOQ = Limit of Quantitation
MDL = Method Detection Limit
LOD = Limit of Detection
E = Value Exceeds Calibration Range
P = Indicates >25% difference for detected concentrations between the two GC columns
Q = indicates LCS control criteria did not meet requirements
M = MS/MSD acceptance criteria did not meet requirements

J = Estimated Value
B = Analyte Found in Associated Method Blank
N = Presumptive Evidence of a Compound
* = Values outside of QC limits
D = Dilution
S = Indicates estimated value where valid five-point calibration was not performed prior to analyte detection in sample.
() = Laboratory InHouse Limit

CHEMTECH 284 Sheffield Street, Mountainside, NJ 07092 Phone: 908 789 8900 Fax: 908 789 8922

Report of Analysis

Client:	LiRo Engineers, Inc.	Date Collected:	06/19/17
Project:	DDC OEGS - Cross Island Pkwy Storm Extension	Date Received:	06/20/17
Client Sample ID:	SB-03-COMPMSD	SDG No.:	I3799
Lab Sample ID:	I3799-04MSD	Matrix:	SOIL
Analytical Method:	8015B DRO	% Moisture:	10.1 Decanted:
Sample Wt/Vol:	30.01 Units: g	Final Vol:	1 mL
Soil Aliquot Vol:	uL	Test:	Diesel Range Organics
Extraction Type:		Injection Volume	
GPC Factor :	PH :		

File ID/Qc Batch:	Dilution:	Prep Date	Date Analyzed	Prep Batch ID
FD015474.D	1	06/21/17 08:56	06/22/17 1:24	PB99998

CAS Number	Parameter	Conc.	Qualifier	MDL	LOD	LOQ / CRQL	Units(Dry Weight)
TARGETS							
DRO	DRO	8710		927	927	1850	ug/kg
SURROGATES							
16416-32-3	Tetracosane-d50	11.5		37 - 130		57%	SPK: 20

Comments:

U = Not Detected
LOQ = Limit of Quantitation
MDL = Method Detection Limit
LOD = Limit of Detection
E = Value Exceeds Calibration Range
P = Indicates >25% difference for detected concentrations between the two GC columns
Q = indicates LCS control criteria did not meet requirements
M = MS/MSD acceptance criteria did not meet requirements

J = Estimated Value
B = Analyte Found in Associated Method Blank
N = Presumptive Evidence of a Compound
* = Values outside of QC limits
D = Dilution
S = Indicates estimated value where valid five-point calibration was not performed prior to analyte detection in sample.
() = Laboratory InHouse Limit

CHEMTECH 284 Sheffield Street, Mountainside, NJ 07092 Phone: 908 789 8900 Fax: 908 789 8922

Report of Analysis

Client:	LiRo Engineers, Inc.	Date Collected:	06/19/17
Project:	DDC OEGS - Cross Island Pkwy Storm Extension	Date Received:	06/20/17
Client Sample ID:	SB-03-COMP	SDG No.:	I3799
Lab Sample ID:	I3799-04	Matrix:	SOIL
Analytical Method:	8015B GRO	% Moisture:	10.1 Decanted:
Sample Wt/Vol:	4.98 Units: g	Final Vol:	5 mL
Soil Aliquot Vol:	uL	Test:	Gasoline Range Organics
Extraction Type:		Injection Volume :	
GPC Factor :	PH :		

File ID/Qc Batch:	Dilution:	Date Analyzed	Prep Batch ID
FB009685.D	1	06/24/17 16:43	FB062417

CAS Number	Parameter	Conc.	Qualifier	MDL	LOD	LOQ / CRQL	Units(Dry Weight)
TARGETS							
GRO	GRO	25	U	13	25	50	ug/kg
SURROGATES							
98-08-8	Alpha,Alpha,Alpha-Trifluoroto	16.3		50 - 150		81%	SPK: 20

Comments:

U = Not Detected
LOQ = Limit of Quantitation
MDL = Method Detection Limit
LOD = Limit of Detection
E = Value Exceeds Calibration Range
P = Indicates >25% difference for detected concentrations between the two GC columns
Q = indicates LCS control criteria did not meet requirements
M = MS/MSD acceptance criteria did not meet requirements

J = Estimated Value
B = Analyte Found in Associated Method Blank
N = Presumptive Evidence of a Compound
* = Values outside of QC limits
D = Dilution
S = Indicates estimated value where valid five-point calibration was not performed prior to analyte detection in sample.
() = Laboratory InHouse Limit

CHEMTECH 284 Sheffield Street, Mountainside, NJ 07092 Phone: 908 789 8900 Fax: 908 789 8922

Report of Analysis

Client:	LiRo Engineers, Inc.	Date Collected:	06/19/17 11:20
Project:	DDC OEGS - Cross Island Pkwy Storm Extension	Date Received:	06/20/17
Client Sample ID:	SB-03-COMP	SDG No.:	I3799
Lab Sample ID:	I3799-04	Matrix:	SOIL
		% Solid:	89.9

Parameter	Conc.	Qua.	DF	MDL	LOD	LOQ / CRQL	Units	Prep Date	Date Ana.	Ana Met.
Paint Filter	1	U	1	1	1	1	ml/100gm		06/21/17 11:54	9095A

Comments:

U = Not Detected
LOQ = Limit of Quantitation
MDL = Method Detection Limit
LOD = Limit of Detection
D = Dilution
Q = indicates LCS control criteria did not meet requirements
H = Sample Analysis Out Of Hold Time

J = Estimated Value
B = Analyte Found in Associated Method Blank
* = indicates the duplicate analysis is not within control limits.
E = Indicates the reported value is estimated because of the presence of interference.
OR = Over Range
N =Spiked sample recovery not within control limits

CHEMTECH 284 Sheffield Street, Mountainside, NJ 07092 Phone: 908 789 8900 Fax: 908 789 8922

Report of Analysis

Client:	LiRo Engineers, Inc.	Date Collected:	06/19/17
Project:	DDC OEGS - Cross Island Pkwy Storm Extension	Date Received:	06/20/17
Client Sample ID:	SB-04-14.5-15.0	SDG No.:	I3799
Lab Sample ID:	I3799-05	Matrix:	SOIL
Level (low/med):	low	% Solid:	95.7

Cas	Parameter	Conc.	Qua.	DF	MDL	LOD	LOQ / CRQL	Units(Dry Weight)	Prep Date	Date Ana.	Ana Met.
7429-90-5	Aluminum	2480		1	0.725	1.08	4.32	mg/Kg	06/21/17 09:47	06/22/17 13:09	SW6010
7440-36-0	Antimony	0.54	UN	1	0.484	0.54	2.16	mg/Kg	06/21/17 09:47	06/22/17 13:09	SW6010
7440-38-2	Arsenic	1.33		1	0.216	0.216	0.864	mg/Kg	06/21/17 09:47	06/22/17 13:09	SW6010
7440-39-3	Barium	22.9	N	1	0.345	1.08	4.32	mg/Kg	06/21/17 09:47	06/22/17 13:09	SW6010
7440-41-7	Beryllium	0.115	J	1	0.052	0.065	0.259	mg/Kg	06/21/17 09:47	06/22/17 13:09	SW6010
7440-43-9	Cadmium	0.065	U	1	0.052	0.065	0.259	mg/Kg	06/21/17 09:47	06/22/17 13:09	SW6010
7440-70-2	Calcium	507		1	0.924	21.6	86.4	mg/Kg	06/21/17 09:47	06/22/17 13:09	SW6010
7440-47-3	Chromium	6.6		1	0.108	0.108	0.432	mg/Kg	06/21/17 09:47	06/22/17 13:09	SW6010
7440-48-4	Cobalt	5.73		1	0.324	0.324	1.3	mg/Kg	06/21/17 09:47	06/22/17 13:09	SW6010
7440-50-8	Copper	9.28		1	0.216	0.216	0.864	mg/Kg	06/21/17 09:47	06/22/17 13:09	SW6010
7439-89-6	Iron	11600		1	1.08	1.08	4.32	mg/Kg	06/21/17 09:47	06/22/17 13:09	SW6010
7439-92-1	Lead	4.74		1	0.104	0.216	0.518	mg/Kg	06/21/17 09:47	06/22/17 13:09	SW6010
7439-95-4	Magnesium	642		1	3.96	21.6	86.4	mg/Kg	06/21/17 09:47	06/22/17 13:09	SW6010
7439-96-5	Manganese	382		1	0.164	0.216	0.864	mg/Kg	06/21/17 09:47	06/22/17 13:09	SW6010
7439-97-6	Mercury	0.007	U	1	0.007	0.007	0.013	mg/Kg	06/20/17 18:43	06/21/17 18:59	SW7471A
7440-02-0	Nickel	18.1		1	0.397	0.432	1.73	mg/Kg	06/21/17 09:47	06/22/17 13:09	SW6010
7440-09-7	Potassium	364		1	3.02	21.6	86.4	mg/Kg	06/21/17 09:47	06/22/17 13:09	SW6010
7782-49-2	Selenium	3.67		1	0.216	0.216	0.864	mg/Kg	06/21/17 09:47	06/22/17 13:09	SW6010
7440-22-4	Silver	0.766		1	0.108	0.108	0.432	mg/Kg	06/21/17 09:47	06/22/17 13:09	SW6010
7440-23-5	Sodium	160		1	2.18	21.6	86.4	mg/Kg	06/21/17 09:47	06/22/17 13:09	SW6010
7440-28-0	Thallium	0.423	J	1	0.233	0.432	1.73	mg/Kg	06/21/17 09:47	06/22/17 13:09	SW6010
7440-62-2	Vanadium	12.1		1	0.432	0.432	1.73	mg/Kg	06/21/17 09:47	06/22/17 13:09	SW6010
7440-66-6	Zinc	9.54	N	1	0.432	0.432	1.73	mg/Kg	06/21/17 09:47	06/22/17 13:09	SW6010

Color Before:	Brown	Clarity Before:		Texture:	Medium
Color After:	Yellow	Clarity After:		Artifacts:	No
Comments:	METALS-TAL				

U = Not Detected
LOQ = Limit of Quantitation
MDL = Method Detection Limit
LOD = Limit of Detection
D = Dilution
Q = indicates LCS control criteria did not meet requirements

J = Estimated Value
B = Analyte Found in Associated Method Blank
* = indicates the duplicate analysis is not within control limits.
E = Indicates the reported value is estimated because of the presence of interference.
OR = Over Range
N =Spiked sample recovery not within control limits

CHEMTECH 284 Sheffield Street, Mountainside, NJ 07092 Phone: 908 789 8900 Fax: 908 789 8922

Report of Analysis

Client:	LiRo Engineers, Inc.	Date Collected:	06/19/17
Project:	DDC OEGS - Cross Island Pkwy Storm Extension	Date Received:	06/20/17
Client Sample ID:	SB-04-14.5-15.0	SDG No.:	I3799
Lab Sample ID:	I3799-05	Matrix:	SOIL
Analytical Method:	SW8082A	% Moisture:	4.3 Decanted:
Sample Wt/Vol:	30.03 Units: g	Final Vol:	10000 uL
Soil Aliquot Vol:	uL	Test:	PCB
Extraction Type:		Injection Volume	
GPC Factor :	1.0 PH :		

File ID/Qc Batch:	Dilution:	Prep Date	Date Analyzed	Prep Batch ID
PO035493.D	1	06/21/17 08:13	06/22/17 19:37	PB99995

CAS Number	Parameter	Conc.	Qualifier	MDL	LOD	LOQ / CRQL	Units(Dry Weight)
TARGETS							
12674-11-2	Aroclor-1016	3.5	U	3.5	3.5	17.7	ug/kg
11104-28-2	Aroclor-1221	3.5	U	3.5	3.5	17.7	ug/kg
11141-16-5	Aroclor-1232	3.5	U	3.5	3.5	17.7	ug/kg
53469-21-9	Aroclor-1242	3.5	U	3.5	3.5	17.7	ug/kg
12672-29-6	Aroclor-1248	3.5	U	3.5	3.5	17.7	ug/kg
11097-69-1	Aroclor-1254	3.5	U	1.6	3.5	17.7	ug/kg
37324-23-5	Aroclor-1262	3.5	U	3.5	3.5	17.7	ug/kg
11100-14-4	Aroclor-1268	3.5	U	3.5	3.5	17.7	ug/kg
11096-82-5	Aroclor-1260	3.5	U	3.5	3.5	17.7	ug/kg
SURROGATES							
877-09-8	Tetrachloro-m-xylene	22.4		10 - 166		112%	SPK: 20
2051-24-3	Decachlorobiphenyl	20.2		60 - 125		101%	SPK: 20

Comments:

U = Not Detected
LOQ = Limit of Quantitation
MDL = Method Detection Limit
LOD = Limit of Detection
E = Value Exceeds Calibration Range
P = Indicates >25% difference for detected concentrations between the two GC columns
Q = indicates LCS control criteria did not meet requirements
M = MS/MSD acceptance criteria did not meet requirements

J = Estimated Value
B = Analyte Found in Associated Method Blank
N = Presumptive Evidence of a Compound
* = Values outside of QC limits
D = Dilution
S = Indicates estimated value where valid five-point calibration was not performed prior to analyte detection in sample.
() = Laboratory InHouse Limit

CHEMTECH 284 Sheffield Street, Mountainside, NJ 07092 Phone: 908 789 8900 Fax: 908 789 8922

Report of Analysis

Client:	LiRo Engineers, Inc.	Date Collected:	06/19/17
Project:	DDC OEGS - Cross Island Pkwy Storm Extension	Date Received:	06/20/17
Client Sample ID:	SB-04-14.5-15.0	SDG No.:	I3799
Lab Sample ID:	I3799-05	Matrix:	SOIL
Analytical Method:	SW8081	% Moisture:	4.3 Decanted:
Sample Wt/Vol:	30.03 Units: g	Final Vol:	10000 uL
Soil Aliquot Vol:	uL	Test:	PESTICIDE Group1
Extraction Type:		Injection Volume :	
GPC Factor :	1.0 PH :		

File ID/Qc Batch:	Dilution:	Prep Date	Date Analyzed	Prep Batch ID
PL026298.D	1	06/21/17 08:16	06/21/17 17:07	PB99996

CAS Number	Parameter	Conc.	Qualifier	MDL	LOD	LOQ / CRQL	Units(Dry Weight)
TARGETS							
319-84-6	alpha-BHC	0.344	U	0.136	0.344	1.8	ug/kg
319-85-7	beta-BHC	0.344	U	0.188	0.344	1.8	ug/kg
319-86-8	delta-BHC	0.344	U	0.104	0.344	1.8	ug/kg
58-89-9	gamma-BHC (Lindane)	0.344	U	0.157	0.344	1.8	ug/kg
76-44-8	Heptachlor	0.344	U	0.146	0.344	1.8	ug/kg
309-00-2	Aldrin	0.344	U	0.104	0.344	1.8	ug/kg
1024-57-3	Heptachlor epoxide	0.344	U	0.167	0.344	1.8	ug/kg
959-98-8	Endosulfan I	0.344	U	0.157	0.344	1.8	ug/kg
60-57-1	Dieldrin	0.344	U	0.136	0.344	1.8	ug/kg
72-55-9	4,4-DDE	0.344	U	0.209	0.344	1.8	ug/kg
72-20-8	Endrin	0.344	U	0.188	0.344	1.8	ug/kg
33213-65-9	Endosulfan II	0.344	U	0.146	0.344	1.8	ug/kg
72-54-8	4,4-DDD	0.344	U	0.178	0.344	1.8	ug/kg
1031-07-8	Endosulfan Sulfate	0.344	U	0.157	0.344	1.8	ug/kg
50-29-3	4,4-DDT	0.344	U	0.146	0.344	1.8	ug/kg
72-43-5	Methoxychlor	0.344	U	0.178	0.344	1.8	ug/kg
53494-70-5	Endrin ketone	0.344	U	0.136	0.344	1.8	ug/kg
7421-93-4	Endrin aldehyde	0.344	U	0.157	0.344	1.8	ug/kg
5103-71-9	alpha-Chlordane	0.344	U	0.146	0.344	1.8	ug/kg
5103-74-2	gamma-Chlordane	0.344	U	0.136	0.344	1.8	ug/kg
8001-35-2	Toxaphene	3.5	U	3.5	3.5	17.7	ug/kg
SURROGATES							
2051-24-3	Decachlorobiphenyl	25.6		10 - 169		128%	SPK: 20
877-09-8	Tetrachloro-m-xylene	22.5		31 - 151		113%	SPK: 20

CHEMTECH 284 Sheffield Street, Mountainside, NJ 07092 Phone: 908 789 8900 Fax: 908 789 8922

Report of Analysis

Client:	LiRo Engineers, Inc.	Date Collected:	06/19/17
Project:	DDC OEGS - Cross Island Pkwy Storm Extension	Date Received:	06/20/17
Client Sample ID:	SB-04-14.5-15.0	SDG No.:	I3799
Lab Sample ID:	I3799-05	Matrix:	SOIL
Analytical Method:	SW8081	% Moisture:	4.3 Decanted:
Sample Wt/Vol:	30.03 Units: g	Final Vol:	10000 uL
Soil Aliquot Vol:	uL	Test:	PESTICIDE Group1
Extraction Type:		Injection Volume :	
GPC Factor :	1.0 PH :		

File ID/Qc Batch:	Dilution:	Prep Date	Date Analyzed	Prep Batch ID
PL026298.D	1	06/21/17 08:16	06/21/17 17:07	PB99996

CAS Number	Parameter	Conc.	Qualifier	MDL	LOD	LOQ / CRQL	Units

Comments:

U = Not Detected
LOQ = Limit of Quantitation
MDL = Method Detection Limit
LOD = Limit of Detection
E = Value Exceeds Calibration Range
P = Indicates >25% difference for detected concentrations between the two GC columns
Q = indicates LCS control criteria did not meet requirements
M = MS/MSD acceptance criteria did not meet requirements

J = Estimated Value
B = Analyte Found in Associated Method Blank
N = Presumptive Evidence of a Compound
* = Values outside of QC limits
D = Dilution
S = Indicates estimated value where valid five-point calibration was not performed prior to analyte detection in sample.
() = Laboratory InHouse Limit

CHEMTECH 284 Sheffield Street, Mountainside, NJ 07092 Phone: 908 789 8900 Fax: 908 789 8922

Report of Analysis

Client:	LiRo Engineers, Inc.	Date Collected:	06/19/17
Project:	DDC OEGS - Cross Island Pkwy Storm Extension	Date Received:	06/20/17
Client Sample ID:	SB-04-14.5-15.0	SDG No.:	I3799
Lab Sample ID:	I3799-05	Matrix:	SOIL
Analytical Method:	SW8270	% Moisture:	4.3
Sample Wt/Vol:	30.14 Units: g	Final Vol:	1000 uL
Soil Aliquot Vol:	uL	Test:	SVOCMS Group1
Extraction Type :	Decanted : N	Level :	LOW
Injection Volume :	GPC Factor : 1.0	GPC Cleanup :	N PH :

File ID/Qc Batch:	Dilution:	Prep Date	Date Analyzed	Prep Batch ID
BG027591.D	1	06/21/17 08:55	06/22/17 11:40	PB99997

CAS Number	Parameter	Conc.	Qualifier	MDL	LOD	LOQ / CRQL	Units(Dry Weight)
TARGETS							
100-52-7	Benzaldehyde	34.7	U	18.1	34.7	340	ug/Kg
108-95-2	Phenol	34.7	U	8	34.7	340	ug/Kg
111-44-4	bis(2-Chloroethyl)ether	34.7	U	16.6	34.7	340	ug/Kg
95-57-8	2-Chlorophenol	34.7	U	18.3	34.7	340	ug/Kg
95-48-7	2-Methylphenol	34.7	U	18.8	34.7	340	ug/Kg
108-60-1	2,2-oxybis(1-Chloropropane)	34.7	U	14.4	34.7	340	ug/Kg
98-86-2	Acetophenone	34.7	U	10.6	34.7	340	ug/Kg
65794-96-9	3+4-Methylphenols	34.7	U	18	34.7	340	ug/Kg
621-64-7	n-Nitroso-di-n-propylamine	34.7	U	17.5	34.7	340	ug/Kg
67-72-1	Hexachloroethane	34.7	U	15.5	34.7	340	ug/Kg
98-95-3	Nitrobenzene	34.7	U	13.1	34.7	340	ug/Kg
78-59-1	Isophorone	34.7	U	11.4	34.7	340	ug/Kg
88-75-5	2-Nitrophenol	34.7	U	16.7	34.7	340	ug/Kg
105-67-9	2,4-Dimethylphenol	34.7	U	19.7	34.7	340	ug/Kg
111-91-1	bis(2-Chloroethoxy)methane	34.7	U	20	34.7	340	ug/Kg
120-83-2	2,4-Dichlorophenol	34.7	U	13.2	34.7	340	ug/Kg
91-20-3	Naphthalene	34.7	U	12	34.7	340	ug/Kg
106-47-8	4-Chloroaniline	34.7	U	24.4	34.7	340	ug/Kg
87-68-3	Hexachlorobutadiene	34.7	U	12.6	34.7	340	ug/Kg
105-60-2	Caprolactam	69.3	U	16.1	69.3	340	ug/Kg
59-50-7	4-Chloro-3-methylphenol	34.7	U	15.4	34.7	340	ug/Kg
91-57-6	2-Methylnaphthalene	34.7	U	8.7	34.7	340	ug/Kg
77-47-4	Hexachlorocyclopentadiene	34.7	U	8.4	34.7	340	ug/Kg
88-06-2	2,4,6-Trichlorophenol	34.7	U	10.6	34.7	340	ug/Kg
95-95-4	2,4,5-Trichlorophenol	34.7	U	24.3	34.7	340	ug/Kg
92-52-4	1,1-Biphenyl	34.7	U	13.1	34.7	340	ug/Kg
91-58-7	2-Chloronaphthalene	34.7	U	7.9	34.7	340	ug/Kg
88-74-4	2-Nitroaniline	34.7	U	15.4	34.7	340	ug/Kg
131-11-3	Dimethylphthalate	340		9.4	34.7	340	ug/Kg
208-96-8	Acenaphthylene	34.7	U	8.7	34.7	340	ug/Kg
606-20-2	2,6-Dinitrotoluene	34.7	U	14.1	34.7	340	ug/Kg

CHEMTECH 284 Sheffield Street, Mountainside, NJ 07092 Phone: 908 789 8900 Fax: 908 789 8922

Report of Analysis

Client:	LiRo Engineers, Inc.	Date Collected:	06/19/17
Project:	DDC OEGS - Cross Island Pkwy Storm Extension	Date Received:	06/20/17
Client Sample ID:	SB-04-14.5-15.0	SDG No.:	I3799
Lab Sample ID:	I3799-05	Matrix:	SOIL
Analytical Method:	SW8270	% Moisture:	4.3
Sample Wt/Vol:	30.14 Units: g	Final Vol:	1000 uL
Soil Aliquot Vol:	uL	Test:	SVOCMS Group1
Extraction Type :	Decanted : N	Level :	LOW
Injection Volume :	GPC Factor : 1.0	GPC Cleanup :	N PH :

File ID/Qc Batch:	Dilution:	Prep Date	Date Analyzed	Prep Batch ID
BG027591.D	1	06/21/17 08:55	06/22/17 11:40	PB99997

CAS Number	Parameter	Conc.	Qualifier	MDL	LOD	LOQ / CRQL	Units(Dry Weight)
99-09-2	3-Nitroaniline	69.3	U	22.3	69.3	340	ug/Kg
83-32-9	Acenaphthene	34.7	U	9.8	34.7	340	ug/Kg
51-28-5	2,4-Dinitrophenol	280	U	35.3	280	340	ug/Kg
100-02-7	4-Nitrophenol	170	U	64.4	170	340	ug/Kg
132-64-9	Dibenzofuran	34.7	U	13.5	34.7	340	ug/Kg
121-14-2	2,4-Dinitrotoluene	34.7	U	10.4	34.7	340	ug/Kg
84-66-2	Diethylphthalate	34.7	U	5.4	34.7	340	ug/Kg
7005-72-3	4-Chlorophenyl-phenylether	34.7	U	18.8	34.7	340	ug/Kg
86-73-7	Fluorene	34.7	U	13.1	34.7	340	ug/Kg
100-01-6	4-Nitroaniline	69.3	U	45.1	69.3	340	ug/Kg
534-52-1	4,6-Dinitro-2-methylphenol	170	U	19.9	170	340	ug/Kg
86-30-6	n-Nitrosodiphenylamine	34.7	U	8.3	34.7	340	ug/Kg
101-55-3	4-Bromophenyl-phenylether	34.7	U	6.8	34.7	340	ug/Kg
118-74-1	Hexachlorobenzene	34.7	U	14.1	34.7	340	ug/Kg
1912-24-9	Atrazine	34.7	U	18.3	34.7	340	ug/Kg
87-86-5	Pentachlorophenol	34.7	U	23.7	34.7	340	ug/Kg
85-01-8	Phenanthrene	34.7	U	9.4	34.7	340	ug/Kg
120-12-7	Anthracene	34.7	U	7.1	34.7	340	ug/Kg
86-74-8	Carbazole	34.7	U	7.6	34.7	340	ug/Kg
84-74-2	Di-n-butylphthalate	34.7	U	27.3	34.7	340	ug/Kg
206-44-0	Fluoranthene	34.7	U	7	34.7	340	ug/Kg
129-00-0	Pyrene	34.7	U	8.3	34.7	340	ug/Kg
85-68-7	Butylbenzylphthalate	34.7	U	16.6	34.7	340	ug/Kg
91-94-1	3,3-Dichlorobenzidine	34.7	U	22.3	34.7	340	ug/Kg
56-55-3	Benzo(a)anthracene	34.7	U	16.5	34.7	340	ug/Kg
218-01-9	Chrysene	34.7	U	15.7	34.7	340	ug/Kg
117-81-7	Bis(2-ethylhexyl)phthalate	34.7	U	12.3	34.7	340	ug/Kg
117-84-0	Di-n-octyl phthalate	34.7	U	4	34.7	340	ug/Kg
205-99-2	Benzo(b)fluoranthene	34.7	U	11.3	34.7	340	ug/Kg
207-08-9	Benzo(k)fluoranthene	34.7	U	16.3	34.7	340	ug/Kg
50-32-8	Benzo(a)pyrene	34.7	U	7.5	34.7	340	ug/Kg
193-39-5	Indeno(1,2,3-cd)pyrene	34.7	U	11.5	34.7	340	ug/Kg
53-70-3	Dibenzo(a,h)anthracene	34.7	U	10	34.7	340	ug/Kg

CHEMTECH 284 Sheffield Street, Mountainside, NJ 07092 Phone: 908 789 8900 Fax: 908 789 8922

Report of Analysis

Client:	LiRo Engineers, Inc.	Date Collected:	06/19/17
Project:	DDC OEGS - Cross Island Pkwy Storm Extension	Date Received:	06/20/17
Client Sample ID:	SB-04-14.5-15.0	SDG No.:	I3799
Lab Sample ID:	I3799-05	Matrix:	SOIL
Analytical Method:	SW8270	% Moisture:	4.3
Sample Wt/Vol:	30.14 Units: g	Final Vol:	1000 uL
Soil Aliquot Vol:	uL	Test:	SVOCMS Group1
Extraction Type :	Decanted : N	Level :	LOW
Injection Volume :	GPC Factor : 1.0	GPC Cleanup :	N PH :

File ID/Qc Batch:	Dilution:	Prep Date	Date Analyzed	Prep Batch ID
BG027591.D	1	06/21/17 08:55	06/22/17 11:40	PB99997

CAS Number	Parameter	Conc.	Qualifier	MDL	LOD	LOQ / CRQL	Units(Dry Weight)
191-24-2	Benzo(g,h,i)perylene	34.7	U	14	34.7	340	ug/Kg
95-94-3	1,2,4,5-Tetrachlorobenzene	34.7	U	13.6	34.7	340	ug/Kg
123-91-1	1,4-Dioxane	69.3	U	13.6	69.3	340	ug/Kg
58-90-2	2,3,4,6-Tetrachlorophenol	34.7	U	13.6	34.7	340	ug/Kg
SURROGATES							
367-12-4	2-Fluorophenol	120		28 - 127		81%	SPK: 150
13127-88-3	Phenol-d6	110		34 - 127		77%	SPK: 150
4165-60-0	Nitrobenzene-d5	78.7		31 - 132		79%	SPK: 100
321-60-8	2-Fluorobiphenyl	75.7		39 - 123		76%	SPK: 100
118-79-6	2,4,6-Tribromophenol	130		30 - 133		87%	SPK: 150
1718-51-0	Terphenyl-d14	81.7		37 - 115		82%	SPK: 100
INTERNAL STANDARDS							
3855-82-1	1,4-Dichlorobenzene-d4	20142	8.51				
1146-65-2	Naphthalene-d8	91871	11.32				
15067-26-2	Acenaphthene-d10	58931	15.09				
1517-22-2	Phenanthrene-d10	176804	17.84				
1719-03-5	Chrysene-d12	191621	22.2				
1520-96-3	Perylene-d12	185124	25.84				

U = Not Detected
LOQ = Limit of Quantitation
MDL = Method Detection Limit
LOD = Limit of Detection
E = Value Exceeds Calibration Range
Q = indicates LCS control criteria did not meet requirements
M = MS/MSD acceptance criteria did not meet requirements

J = Estimated Value
B = Analyte Found in Associated Method Blank
N = Presumptive Evidence of a Compound
* = Values outside of QC limits
D = Dilution
() = Laboratory InHouse Limit

CHEMTECH 284 Sheffield Street, Mountainside, NJ 07092 Phone: 908 789 8900 Fax: 908 789 8922

Report of Analysis

Client:	LiRo Engineers, Inc.	Date Collected:	06/19/17
Project:	DDC OEGS - Cross Island Pkwy Storm Extension	Date Received:	06/20/17
Client Sample ID:	SB-04-14.5-15.0	SDG No.:	I3799
Lab Sample ID:	I3799-05	Matrix:	SOIL
Analytical Method:	SW8260	% Moisture:	4.3
Sample Wt/Vol:	4.99 Units: g	Final Vol:	5000 uL
Soil Aliquot Vol:	uL	Test:	VOCMS Group1
GC Column:	RTX-VMS ID : 0.18	Level :	LOW

File ID/Qc Batch:	Dilution:	Prep Date	Date Analyzed	Prep Batch ID
VF053137.D	1		06/22/17 21:04	VF062217

CAS Number	Parameter	Conc.	Qualifier	MDL	LOD	LOQ / CRQL	Units(Dry Weight)
TARGETS							
75-71-8	Dichlorodifluoromethane	0.52	U	0.52	0.52	5.2	ug/Kg
74-87-3	Chloromethane	0.52	U	0.52	0.52	5.2	ug/Kg
75-01-4	Vinyl Chloride	0.52	U	0.52	0.52	5.2	ug/Kg
74-83-9	Bromomethane	1	U	1	1	5.2	ug/Kg
75-00-3	Chloroethane	0.52	U	0.52	0.52	5.2	ug/Kg
75-69-4	Trichlorofluoromethane	0.52	U	0.52	0.52	5.2	ug/Kg
76-13-1	1,1,2-Trichlorotrifluoroethane	0.52	U	0.52	0.52	5.2	ug/Kg
75-65-0	Tert butyl alcohol	26.2	U	7.8	26.2	26.2	ug/Kg
75-35-4	1,1-Dichloroethene	0.52	U	0.52	0.52	5.2	ug/Kg
67-64-1	Acetone	2.6	U	2.6	2.6	26.2	ug/Kg
75-15-0	Carbon Disulfide	0.52	U	0.52	0.52	5.2	ug/Kg
1634-04-4	Methyl tert-butyl Ether	0.52	U	0.52	0.52	5.2	ug/Kg
79-20-9	Methyl Acetate	1	U	1	1	5.2	ug/Kg
75-09-2	Methylene Chloride	19.1		0.52	0.52	5.2	ug/Kg
156-60-5	trans-1,2-Dichloroethene	0.52	U	0.52	0.52	5.2	ug/Kg
75-34-3	1,1-Dichloroethane	0.52	U	0.52	0.52	5.2	ug/Kg
110-82-7	Cyclohexane	0.52	U	0.52	0.52	5.2	ug/Kg
78-93-3	2-Butanone	7.9	U	3.3	7.9	26.2	ug/Kg
56-23-5	Carbon Tetrachloride	0.52	U	0.52	0.52	5.2	ug/Kg
156-59-2	cis-1,2-Dichloroethene	0.52	U	0.52	0.52	5.2	ug/Kg
74-97-5	Bromochloromethane	0.52	U	0.52	0.52	5.2	ug/Kg
67-66-3	Chloroform	0.52	U	0.52	0.52	5.2	ug/Kg
71-55-6	1,1,1-Trichloroethane	0.52	U	0.52	0.52	5.2	ug/Kg
108-87-2	Methylcyclohexane	0.52	U	0.52	0.52	5.2	ug/Kg
71-43-2	Benzene	0.52	U	0.4	0.52	5.2	ug/Kg
107-06-2	1,2-Dichloroethane	0.52	U	0.52	0.52	5.2	ug/Kg
79-01-6	Trichloroethene	0.52	U	0.52	0.52	5.2	ug/Kg
78-87-5	1,2-Dichloropropane	0.52	U	0.27	0.52	5.2	ug/Kg
75-27-4	Bromodichloromethane	0.52	U	0.52	0.52	5.2	ug/Kg
108-10-1	4-Methyl-2-Pentanone	2.6	U	2.6	2.6	26.2	ug/Kg
108-88-3	Toluene	0.52	U	0.52	0.52	5.2	ug/Kg
10061-02-6	t-1,3-Dichloropropene	0.52	U	0.52	0.52	5.2	ug/Kg

CHEMTECH 284 Sheffield Street, Mountainside, NJ 07092 Phone: 908 789 8900 Fax: 908 789 8922

Report of Analysis

Client:	LiRo Engineers, Inc.	Date Collected:	06/19/17
Project:	DDC OEGS - Cross Island Pkwy Storm Extension	Date Received:	06/20/17
Client Sample ID:	SB-04-14.5-15.0	SDG No.:	I3799
Lab Sample ID:	I3799-05	Matrix:	SOIL
Analytical Method:	SW8260	% Moisture:	4.3
Sample Wt/Vol:	4.99 Units: g	Final Vol:	5000 uL
Soil Aliquot Vol:	uL	Test:	VOCMS Group1
GC Column:	RTX-VMS ID : 0.18	Level :	LOW

File ID/Qc Batch:	Dilution:	Prep Date	Date Analyzed	Prep Batch ID
VF053137.D	1		06/22/17 21:04	VF062217

CAS Number	Parameter	Conc.	Qualifier	MDL	LOD	LOQ / CRQL	Units(Dry Weight)
10061-01-5	cis-1,3-Dichloropropene	0.52	U	0.52	0.52	5.2	ug/Kg
79-00-5	1,1,2-Trichloroethane	1	U	0.94	1	5.2	ug/Kg
591-78-6	2-Hexanone	2.6	U	2.6	2.6	26.2	ug/Kg
124-48-1	Dibromochloromethane	0.52	U	0.52	0.52	5.2	ug/Kg
106-93-4	1,2-Dibromoethane	0.52	U	0.52	0.52	5.2	ug/Kg
127-18-4	Tetrachloroethene	0.52	U	0.52	0.52	5.2	ug/Kg
108-90-7	Chlorobenzene	0.52	U	0.52	0.52	5.2	ug/Kg
100-41-4	Ethyl Benzene	0.52	U	0.52	0.52	5.2	ug/Kg
179601-23-1	m/p-Xylenes	1	U	0.75	1	10.5	ug/Kg
95-47-6	o-Xylene	0.52	U	0.52	0.52	5.2	ug/Kg
100-42-5	Styrene	0.52	U	0.47	0.52	5.2	ug/Kg
75-25-2	Bromoform	1.6	U	0.77	1.6	5.2	ug/Kg
98-82-8	Isopropylbenzene	0.52	U	0.5	0.52	5.2	ug/Kg
79-34-5	1,1,2,2-Tetrachloroethane	0.52	U	0.48	0.52	5.2	ug/Kg
541-73-1	1,3-Dichlorobenzene	0.52	U	0.39	0.52	5.2	ug/Kg
106-46-7	1,4-Dichlorobenzene	0.52	U	0.43	0.52	5.2	ug/Kg
95-50-1	1,2-Dichlorobenzene	0.52	U	0.52	0.52	5.2	ug/Kg
96-12-8	1,2-Dibromo-3-Chloropropane	5.2	U	0.91	5.2	5.2	ug/Kg
120-82-1	1,2,4-Trichlorobenzene	0.52	U	0.52	0.52	5.2	ug/Kg
87-61-6	1,2,3-Trichlorobenzene	1	U	0.52	1	5.2	ug/Kg
SURROGATES							
17060-07-0	1,2-Dichloroethane-d4	40.5		56 - 120		81%	SPK: 50
1868-53-7	Dibromofluoromethane	50.1		57 - 135		100%	SPK: 50
2037-26-5	Toluene-d8	45.3		67 - 123		91%	SPK: 50
460-00-4	4-Bromofluorobenzene	44.5		33 - 141		89%	SPK: 50
INTERNAL STANDARDS							
363-72-4	Pentafluorobenzene	368449	4.82				
540-36-3	1,4-Difluorobenzene	666398	5.54				
3114-55-4	Chlorobenzene-d5	587236	9.71				
855-82-1	1,4-Dichlorobenzene-d4	266997	12.49				

CHEMTECH 284 Sheffield Street, Mountainside, NJ 07092 Phone: 908 789 8900 Fax: 908 789 8922

Report of Analysis

Client:	LiRo Engineers, Inc.	Date Collected:	06/19/17
Project:	DDC OEGS - Cross Island Pkwy Storm Extension	Date Received:	06/20/17
Client Sample ID:	SB-04-14.5-15.0	SDG No.:	I3799
Lab Sample ID:	I3799-05	Matrix:	SOIL
Analytical Method:	SW8260	% Moisture:	4.3
Sample Wt/Vol:	4.99 Units: g	Final Vol:	5000 uL
Soil Aliquot Vol:	uL	Test:	VOCMS Group1
GC Column:	RTX-VMS ID : 0.18	Level :	LOW

File ID/Qc Batch:	Dilution:	Prep Date	Date Analyzed	Prep Batch ID
VF053137.D	1		06/22/17 21:04	VF062217

CAS Number	Parameter	Conc.	Qualifier	MDL	LOD	LOQ / CRQL	Units

U = Not Detected
LOQ = Limit of Quantitation
MDL = Method Detection Limit
LOD = Limit of Detection
E = Value Exceeds Calibration Range
Q = indicates LCS control criteria did not meet requirements
M = MS/MSD acceptance criteria did not meet requirements

J = Estimated Value
B = Analyte Found in Associated Method Blank
N = Presumptive Evidence of a Compound
* = Values outside of QC limits
D = Dilution
() = Laboratory InHouse Limit

CHEMTECH 284 Sheffield Street, Mountainside, NJ 07092 Phone: 908 789 8900 Fax: 908 789 8922

Report of Analysis

Client:	LiRo Engineers, Inc.	Date Collected:	06/19/17
Project:	DDC OEGS - Cross Island Pkwy Storm Extension	Date Received:	06/20/17
Client Sample ID:	SB-04-COMP	SDG No.:	I3799
Lab Sample ID:	I3799-06	Matrix:	SOIL
Analytical Method:	8015B DRO	% Moisture:	3.6 Decanted:
Sample Wt/Vol:	30.11 Units: g	Final Vol:	1 mL
Soil Aliquot Vol:	uL	Test:	Diesel Range Organics
Extraction Type:		Injection Volume	
GPC Factor :	PH :		

File ID/Qc Batch:	Dilution:	Prep Date	Date Analyzed	Prep Batch ID
FD015463.D	1	06/21/17 08:56	06/21/17 18:45	PB99998

CAS Number	Parameter	Conc.	Qualifier	MDL	LOD	LOQ / CRQL	Units(Dry Weight)
TARGETS							
DRO	DRO	3893		861	861	1720	ug/kg
SURROGATES							
16416-32-3	Tetracosane-d50	14.2		37 - 130		71%	SPK: 20

Comments:

U = Not Detected
LOQ = Limit of Quantitation
MDL = Method Detection Limit
LOD = Limit of Detection
E = Value Exceeds Calibration Range
P = Indicates >25% difference for detected concentrations between the two GC columns
Q = indicates LCS control criteria did not meet requirements
M = MS/MSD acceptance criteria did not meet requirements

J = Estimated Value
B = Analyte Found in Associated Method Blank
N = Presumptive Evidence of a Compound
* = Values outside of QC limits
D = Dilution
S = Indicates estimated value where valid five-point calibration was not performed prior to analyte detection in sample.
() = Laboratory InHouse Limit

CHEMTECH 284 Sheffield Street, Mountainside, NJ 07092 Phone: 908 789 8900 Fax: 908 789 8922

Report of Analysis

Client:	LiRo Engineers, Inc.	Date Collected:	06/19/17
Project:	DDC OEGS - Cross Island Pkwy Storm Extension	Date Received:	06/20/17
Client Sample ID:	SB-04-COMP	SDG No.:	I3799
Lab Sample ID:	I3799-06	Matrix:	SOIL
Analytical Method:	8015B GRO	% Moisture:	3.6 Decanted:
Sample Wt/Vol:	5.04 Units: g	Final Vol:	5 mL
Soil Aliquot Vol:	uL	Test:	Gasoline Range Organics
Extraction Type:		Injection Volume :	
GPC Factor :	PH :		

File ID/Qc Batch:	Dilution:	Date Analyzed	Prep Batch ID
FB009686.D	1	06/24/17 17:14	FB062417

CAS Number	Parameter	Conc.	Qualifier	MDL	LOD	LOQ / CRQL	Units(Dry Weight)
TARGETS							
GRO	GRO	23	U	12	23	46	ug/kg
SURROGATES							
98-08-8	Alpha,Alpha,Alpha-Trifluoroto	14.4		50 - 150		72%	SPK: 20

Comments:

U = Not Detected
LOQ = Limit of Quantitation
MDL = Method Detection Limit
LOD = Limit of Detection
E = Value Exceeds Calibration Range
P = Indicates >25% difference for detected concentrations between the two GC columns
Q = indicates LCS control criteria did not meet requirements
M = MS/MSD acceptance criteria did not meet requirements

J = Estimated Value
B = Analyte Found in Associated Method Blank
N = Presumptive Evidence of a Compound
* = Values outside of QC limits
D = Dilution
S = Indicates estimated value where valid five-point calibration was not performed prior to analyte detection in sample.
() = Laboratory InHouse Limit

CHEMTECH 284 Sheffield Street, Mountainside, NJ 07092 Phone: 908 789 8900 Fax: 908 789 8922

Report of Analysis

Client:	LiRo Engineers, Inc.	Date Collected:	06/19/17 13:05
Project:	DDC OEGS - Cross Island Pkwy Storm Extension	Date Received:	06/20/17
Client Sample ID:	SB-04-COMP	SDG No.:	I3799
Lab Sample ID:	I3799-06	Matrix:	SOIL
		% Solid:	96.4

Parameter	Conc.	Qua.	DF	MDL	LOD	LOQ / CRQL	Units	Prep Date	Date Ana.	Ana Met.
Paint Filter	1	U	1	1	1	1	ml/100gm		06/21/17 12:04	9095A

Comments:

U = Not Detected
LOQ = Limit of Quantitation
MDL = Method Detection Limit
LOD = Limit of Detection
D = Dilution
Q = indicates LCS control criteria did not meet requirements
H = Sample Analysis Out Of Hold Time

J = Estimated Value
B = Analyte Found in Associated Method Blank
* = indicates the duplicate analysis is not within control limits.
E = Indicates the reported value is estimated because of the presence of interference.
OR = Over Range
N =Spiked sample recovery not within control limits

CHEMTECH 284 Sheffield Street, Mountainside, NJ 07092 Phone: 908 789 8900 Fax: 908 789 8922

Report of Analysis

Client:	LiRo Engineers, Inc.	Date Collected:	06/20/17
Project:	DDC OEGS - Cross Island Pkwy Storm Extension	Date Received:	06/20/17
Client Sample ID:	SB-05-9.5-10.0	SDG No.:	I3799
Lab Sample ID:	I3799-07	Matrix:	SOIL
Level (low/med):	low	% Solid:	96.7

Cas	Parameter	Conc.	Qua.	DF	MDL	LOD	LOQ / CRQL	Units(Dry Weight)	Prep Date	Date Ana.	Ana Met.
7429-90-5	Aluminum	2000		1	0.721	1.07	4.29	mg/Kg	06/21/17 09:47	06/22/17 13:14	SW6010
7440-36-0	Antimony	0.536	UN	1	0.481	0.536	2.15	mg/Kg	06/21/17 09:47	06/22/17 13:14	SW6010
7440-38-2	Arsenic	1.06		1	0.215	0.215	0.858	mg/Kg	06/21/17 09:47	06/22/17 13:14	SW6010
7440-39-3	Barium	14.9	N	1	0.343	1.07	4.29	mg/Kg	06/21/17 09:47	06/22/17 13:14	SW6010
7440-41-7	Beryllium	0.072	J	1	0.051	0.064	0.257	mg/Kg	06/21/17 09:47	06/22/17 13:14	SW6010
7440-43-9	Cadmium	0.064	U	1	0.051	0.064	0.257	mg/Kg	06/21/17 09:47	06/22/17 13:14	SW6010
7440-70-2	Calcium	428		1	0.918	21.5	85.8	mg/Kg	06/21/17 09:47	06/22/17 13:14	SW6010
7440-47-3	Chromium	4.98		1	0.107	0.107	0.429	mg/Kg	06/21/17 09:47	06/22/17 13:14	SW6010
7440-48-4	Cobalt	2.71		1	0.322	0.322	1.29	mg/Kg	06/21/17 09:47	06/22/17 13:14	SW6010
7440-50-8	Copper	9.76		1	0.215	0.215	0.858	mg/Kg	06/21/17 09:47	06/22/17 13:14	SW6010
7439-89-6	Iron	6120		1	1.07	1.07	4.29	mg/Kg	06/21/17 09:47	06/22/17 13:14	SW6010
7439-92-1	Lead	2.54		1	0.103	0.215	0.515	mg/Kg	06/21/17 09:47	06/22/17 13:14	SW6010
7439-95-4	Magnesium	642		1	3.93	21.5	85.8	mg/Kg	06/21/17 09:47	06/22/17 13:14	SW6010
7439-96-5	Manganese	99.6		1	0.163	0.215	0.858	mg/Kg	06/21/17 09:47	06/22/17 13:14	SW6010
7439-97-6	Mercury	0.007	U	1	0.007	0.007	0.014	mg/Kg	06/20/17 18:43	06/21/17 19:01	SW7471A
7440-02-0	Nickel	10.5		1	0.395	0.429	1.72	mg/Kg	06/21/17 09:47	06/22/17 13:14	SW6010
7440-09-7	Potassium	390		1	3	21.5	85.8	mg/Kg	06/21/17 09:47	06/22/17 13:14	SW6010
7782-49-2	Selenium	2.01		1	0.215	0.215	0.858	mg/Kg	06/21/17 09:47	06/22/17 13:14	SW6010
7440-22-4	Silver	0.405	J	1	0.107	0.107	0.429	mg/Kg	06/21/17 09:47	06/22/17 13:14	SW6010
7440-23-5	Sodium	59.8	J	1	2.16	21.5	85.8	mg/Kg	06/21/17 09:47	06/22/17 13:14	SW6010
7440-28-0	Thallium	0.429	U	1	0.232	0.429	1.72	mg/Kg	06/21/17 09:47	06/22/17 13:14	SW6010
7440-62-2	Vanadium	5.73		1	0.429	0.429	1.72	mg/Kg	06/21/17 09:47	06/22/17 13:14	SW6010
7440-66-6	Zinc	7.52	N	1	0.429	0.429	1.72	mg/Kg	06/21/17 09:47	06/22/17 13:14	SW6010

Color Before:	Brown	Clarity Before:		Texture:	Medium
Color After:	Yellow	Clarity After:		Artifacts:	No
Comments:	METALS-TAL				

U = Not Detected
LOQ = Limit of Quantitation
MDL = Method Detection Limit
LOD = Limit of Detection
D = Dilution
Q = indicates LCS control criteria did not meet requirements

J = Estimated Value
B = Analyte Found in Associated Method Blank
* = indicates the duplicate analysis is not within control limits.
E = Indicates the reported value is estimated because of the presence of interference.
OR = Over Range
N =Spiked sample recovery not within control limits

CHEMTECH 284 Sheffield Street, Mountainside, NJ 07092 Phone: 908 789 8900 Fax: 908 789 8922

Report of Analysis

Client:	LiRo Engineers, Inc.	Date Collected:	06/20/17
Project:	DDC OEGS - Cross Island Pkwy Storm Extension	Date Received:	06/20/17
Client Sample ID:	SB-05-9.5-10.0	SDG No.:	I3799
Lab Sample ID:	I3799-07	Matrix:	SOIL
Analytical Method:	SW8082A	% Moisture:	3.3 Decanted:
Sample Wt/Vol:	30.13 Units: g	Final Vol:	10000 uL
Soil Aliquot Vol:	uL	Test:	PCB
Extraction Type:		Injection Volume	
GPC Factor :	1.0 PH :		

File ID/Qc Batch:	Dilution:	Prep Date	Date Analyzed	Prep Batch ID
PO035494.D	1	06/21/17 08:13	06/22/17 19:53	PB99995

CAS Number	Parameter	Conc.	Qualifier	MDL	LOD	LOQ / CRQL	Units(Dry Weight)
TARGETS							
12674-11-2	Aroclor-1016	3.4	U	3.4	3.4	17.5	ug/kg
11104-28-2	Aroclor-1221	3.4	U	3.4	3.4	17.5	ug/kg
11141-16-5	Aroclor-1232	3.4	U	3.4	3.4	17.5	ug/kg
53469-21-9	Aroclor-1242	3.4	U	3.4	3.4	17.5	ug/kg
12672-29-6	Aroclor-1248	3.4	U	3.4	3.4	17.5	ug/kg
11097-69-1	Aroclor-1254	3.4	U	1.5	3.4	17.5	ug/kg
37324-23-5	Aroclor-1262	3.4	U	3.4	3.4	17.5	ug/kg
11100-14-4	Aroclor-1268	3.4	U	3.4	3.4	17.5	ug/kg
11096-82-5	Aroclor-1260	3.4	U	3.4	3.4	17.5	ug/kg
SURROGATES							
877-09-8	Tetrachloro-m-xylene	24.9		10 - 166		125%	SPK: 20
2051-24-3	Decachlorobiphenyl	23.3		60 - 125		116%	SPK: 20

Comments:

U = Not Detected
LOQ = Limit of Quantitation
MDL = Method Detection Limit
LOD = Limit of Detection
E = Value Exceeds Calibration Range
P = Indicates >25% difference for detected concentrations between the two GC columns
Q = indicates LCS control criteria did not meet requirements
M = MS/MSD acceptance criteria did not meet requirements

J = Estimated Value
B = Analyte Found in Associated Method Blank
N = Presumptive Evidence of a Compound
* = Values outside of QC limits
D = Dilution
S = Indicates estimated value where valid five-point calibration was not performed prior to analyte detection in sample.
() = Laboratory InHouse Limit

CHEMTECH 284 Sheffield Street, Mountainside, NJ 07092 Phone: 908 789 8900 Fax: 908 789 8922

Report of Analysis

Client:	LiRo Engineers, Inc.	Date Collected:	06/20/17
Project:	DDC OEGS - Cross Island Pkwy Storm Extension	Date Received:	06/20/17
Client Sample ID:	SB-05-9.5-10.0	SDG No.:	I3799
Lab Sample ID:	I3799-07	Matrix:	SOIL
Analytical Method:	SW8081	% Moisture:	3.3 Decanted:
Sample Wt/Vol:	30.13 Units: g	Final Vol:	10000 uL
Soil Aliquot Vol:	uL	Test:	PESTICIDE Group1
Extraction Type:		Injection Volume :	
GPC Factor :	1.0 PH :		

File ID/Qc Batch:	Dilution:	Prep Date	Date Analyzed	Prep Batch ID
PL026299.D	1	06/21/17 08:16	06/21/17 17:21	PB99996

CAS Number	Parameter	Conc.	Qualifier	MDL	LOD	LOQ / CRQL	Units(Dry Weight)
TARGETS							
319-84-6	alpha-BHC	0.34	U	0.134	0.34	1.8	ug/kg
319-85-7	beta-BHC	0.34	U	0.185	0.34	1.8	ug/kg
319-86-8	delta-BHC	0.34	U	0.103	0.34	1.8	ug/kg
58-89-9	gamma-BHC (Lindane)	0.34	U	0.154	0.34	1.8	ug/kg
76-44-8	Heptachlor	0.34	U	0.144	0.34	1.8	ug/kg
309-00-2	Aldrin	0.34	U	0.103	0.34	1.8	ug/kg
1024-57-3	Heptachlor epoxide	0.34	U	0.165	0.34	1.8	ug/kg
959-98-8	Endosulfan I	0.34	U	0.154	0.34	1.8	ug/kg
60-57-1	Dieldrin	0.34	U	0.134	0.34	1.8	ug/kg
72-55-9	4,4-DDE	0.34	U	0.206	0.34	1.8	ug/kg
72-20-8	Endrin	0.34	U	0.185	0.34	1.8	ug/kg
33213-65-9	Endosulfan II	0.34	U	0.144	0.34	1.8	ug/kg
72-54-8	4,4-DDD	0.34	U	0.175	0.34	1.8	ug/kg
1031-07-8	Endosulfan Sulfate	0.34	U	0.154	0.34	1.8	ug/kg
50-29-3	4,4-DDT	0.34	U	0.144	0.34	1.8	ug/kg
72-43-5	Methoxychlor	0.34	U	0.175	0.34	1.8	ug/kg
53494-70-5	Endrin ketone	0.34	U	0.134	0.34	1.8	ug/kg
7421-93-4	Endrin aldehyde	0.34	U	0.154	0.34	1.8	ug/kg
5103-71-9	alpha-Chlordane	0.34	U	0.144	0.34	1.8	ug/kg
5103-74-2	gamma-Chlordane	0.34	U	0.134	0.34	1.8	ug/kg
8001-35-2	Toxaphene	3.4	U	3.4	3.4	17.5	ug/kg
SURROGATES							
2051-24-3	Decachlorobiphenyl	25.8		10 - 169		129%	SPK: 20
877-09-8	Tetrachloro-m-xylene	22.2		31 - 151		111%	SPK: 20

CHEMTECH 284 Sheffield Street, Mountainside, NJ 07092 Phone: 908 789 8900 Fax: 908 789 8922

Report of Analysis

Client:	LiRo Engineers, Inc.	Date Collected:	06/20/17
Project:	DDC OEGS - Cross Island Pkwy Storm Extension	Date Received:	06/20/17
Client Sample ID:	SB-05-9.5-10.0	SDG No.:	I3799
Lab Sample ID:	I3799-07	Matrix:	SOIL
Analytical Method:	SW8081	% Moisture:	3.3 Decanted:
Sample Wt/Vol:	30.13 Units: g	Final Vol:	10000 uL
Soil Aliquot Vol:	uL	Test:	PESTICIDE Group1
Extraction Type:		Injection Volume :	
GPC Factor :	1.0 PH :		

File ID/Qc Batch:	Dilution:	Prep Date	Date Analyzed	Prep Batch ID
PL026299.D	1	06/21/17 08:16	06/21/17 17:21	PB99996

CAS Number	Parameter	Conc.	Qualifier	MDL	LOD	LOQ / CRQL	Units

Comments:

U = Not Detected
LOQ = Limit of Quantitation
MDL = Method Detection Limit
LOD = Limit of Detection
E = Value Exceeds Calibration Range
P = Indicates >25% difference for detected concentrations between the two GC columns
Q = indicates LCS control criteria did not meet requirements
M = MS/MSD acceptance criteria did not meet requirements

J = Estimated Value
B = Analyte Found in Associated Method Blank
N = Presumptive Evidence of a Compound
* = Values outside of QC limits
D = Dilution
S = Indicates estimated value where valid five-point calibration was not performed prior to analyte detection in sample.
() = Laboratory InHouse Limit

CHEMTECH 284 Sheffield Street, Mountainside, NJ 07092 Phone: 908 789 8900 Fax: 908 789 8922

Report of Analysis

Client:	LiRo Engineers, Inc.	Date Collected:	06/20/17
Project:	DDC OEGS - Cross Island Pkwy Storm Extension	Date Received:	06/20/17
Client Sample ID:	SB-05-9.5-10.0	SDG No.:	I3799
Lab Sample ID:	I3799-07	Matrix:	SOIL
Analytical Method:	SW8270	% Moisture:	3.3
Sample Wt/Vol:	30.06 Units: g	Final Vol:	1000 uL
Soil Aliquot Vol:	uL	Test:	SVOCMS Group1
Extraction Type :	Decanted : N	Level :	LOW
Injection Volume :	GPC Factor : 1.0	GPC Cleanup :	N PH :

File ID/Qc Batch:	Dilution:	Prep Date	Date Analyzed	Prep Batch ID
BG027592.D	1	06/21/17 08:55	06/22/17 12:19	PB99997

CAS Number	Parameter	Conc.	Qualifier	MDL	LOD	LOQ / CRQL	Units(Dry Weight)
TARGETS							
100-52-7	Benzaldehyde	34.4	U	18	34.4	340	ug/Kg
108-95-2	Phenol	34.4	U	7.9	34.4	340	ug/Kg
111-44-4	bis(2-Chloroethyl)ether	34.4	U	16.5	34.4	340	ug/Kg
95-57-8	2-Chlorophenol	34.4	U	18.2	34.4	340	ug/Kg
95-48-7	2-Methylphenol	34.4	U	18.7	34.4	340	ug/Kg
108-60-1	2,2-oxybis(1-Chloropropane)	34.4	U	14.2	34.4	340	ug/Kg
98-86-2	Acetophenone	34.4	U	10.5	34.4	340	ug/Kg
65794-96-9	3+4-Methylphenols	34.4	U	17.9	34.4	340	ug/Kg
621-64-7	n-Nitroso-di-n-propylamine	34.4	U	17.3	34.4	340	ug/Kg
67-72-1	Hexachloroethane	34.4	U	15.4	34.4	340	ug/Kg
98-95-3	Nitrobenzene	34.4	U	13	34.4	340	ug/Kg
78-59-1	Isophorone	34.4	U	11.4	34.4	340	ug/Kg
88-75-5	2-Nitrophenol	34.4	U	16.6	34.4	340	ug/Kg
105-67-9	2,4-Dimethylphenol	34.4	U	19.5	34.4	340	ug/Kg
111-91-1	bis(2-Chloroethoxy)methane	34.4	U	19.8	34.4	340	ug/Kg
120-83-2	2,4-Dichlorophenol	34.4	U	13.1	34.4	340	ug/Kg
91-20-3	Naphthalene	34.4	U	11.9	34.4	340	ug/Kg
106-47-8	4-Chloroaniline	34.4	U	24.3	34.4	340	ug/Kg
87-68-3	Hexachlorobutadiene	34.4	U	12.5	34.4	340	ug/Kg
105-60-2	Caprolactam	68.8	U	16	68.8	340	ug/Kg
59-50-7	4-Chloro-3-methylphenol	34.4	U	15.3	34.4	340	ug/Kg
91-57-6	2-Methylnaphthalene	34.4	U	8.7	34.4	340	ug/Kg
77-47-4	Hexachlorocyclopentadiene	34.4	U	8.4	34.4	340	ug/Kg
88-06-2	2,4,6-Trichlorophenol	34.4	U	10.5	34.4	340	ug/Kg
95-95-4	2,4,5-Trichlorophenol	34.4	U	24.2	34.4	340	ug/Kg
92-52-4	1,1-Biphenyl	34.4	U	13	34.4	340	ug/Kg
91-58-7	2-Chloronaphthalene	34.4	U	7.8	34.4	340	ug/Kg
88-74-4	2-Nitroaniline	34.4	U	15.3	34.4	340	ug/Kg
131-11-3	Dimethylphthalate	190	J	9.3	34.4	340	ug/Kg
208-96-8	Acenaphthylene	34.4	U	8.7	34.4	340	ug/Kg
606-20-2	2,6-Dinitrotoluene	34.4	U	14	34.4	340	ug/Kg

CHEMTECH 284 Sheffield Street, Mountainside, NJ 07092 Phone: 908 789 8900 Fax: 908 789 8922

Report of Analysis

Client:	LiRo Engineers, Inc.	Date Collected:	06/20/17
Project:	DDC OEGS - Cross Island Pkwy Storm Extension	Date Received:	06/20/17
Client Sample ID:	SB-05-9.5-10.0	SDG No.:	I3799
Lab Sample ID:	I3799-07	Matrix:	SOIL
Analytical Method:	SW8270	% Moisture:	3.3
Sample Wt/Vol:	30.06 Units: g	Final Vol:	1000 uL
Soil Aliquot Vol:	uL	Test:	SVOCMS Group1
Extraction Type :	Decanted : N	Level :	LOW
Injection Volume :	GPC Factor : 1.0	GPC Cleanup :	N PH :

File ID/Qc Batch:	Dilution:	Prep Date	Date Analyzed	Prep Batch ID
BG027592.D	1	06/21/17 08:55	06/22/17 12:19	PB99997

CAS Number	Parameter	Conc.	Qualifier	MDL	LOD	LOQ / CRQL	Units(Dry Weight)
99-09-2	3-Nitroaniline	68.8	U	22.1	68.8	340	ug/Kg
83-32-9	Acenaphthene	34.4	U	9.7	34.4	340	ug/Kg
51-28-5	2,4-Dinitrophenol	280	U	35	280	340	ug/Kg
100-02-7	4-Nitrophenol	170	U	63.9	170	340	ug/Kg
132-64-9	Dibenzofuran	34.4	U	13.4	34.4	340	ug/Kg
121-14-2	2,4-Dinitrotoluene	34.4	U	10.3	34.4	340	ug/Kg
84-66-2	Diethylphthalate	34.4	U	5.4	34.4	340	ug/Kg
7005-72-3	4-Chlorophenyl-phenylether	34.4	U	18.7	34.4	340	ug/Kg
86-73-7	Fluorene	34.4	U	13	34.4	340	ug/Kg
100-01-6	4-Nitroaniline	68.8	U	44.8	68.8	340	ug/Kg
534-52-1	4,6-Dinitro-2-methylphenol	170	U	19.7	170	340	ug/Kg
86-30-6	n-Nitrosodiphenylamine	34.4	U	8.3	34.4	340	ug/Kg
101-55-3	4-Bromophenyl-phenylether	34.4	U	6.7	34.4	340	ug/Kg
118-74-1	Hexachlorobenzene	34.4	U	14	34.4	340	ug/Kg
1912-24-9	Atrazine	34.4	U	18.2	34.4	340	ug/Kg
87-86-5	Pentachlorophenol	34.4	U	23.5	34.4	340	ug/Kg
85-01-8	Phenanthrene	34.4	U	9.3	34.4	340	ug/Kg
120-12-7	Anthracene	34.4	U	7	34.4	340	ug/Kg
86-74-8	Carbazole	34.4	U	7.5	34.4	340	ug/Kg
84-74-2	Di-n-butylphthalate	34.4	U	27	34.4	340	ug/Kg
206-44-0	Fluoranthene	34.4	U	6.9	34.4	340	ug/Kg
129-00-0	Pyrene	34.4	U	8.3	34.4	340	ug/Kg
85-68-7	Butylbenzylphthalate	34.4	U	16.5	34.4	340	ug/Kg
91-94-1	3,3-Dichlorobenzidine	34.4	U	22.1	34.4	340	ug/Kg
56-55-3	Benzo(a)anthracene	34.4	U	16.4	34.4	340	ug/Kg
218-01-9	Chrysene	34.4	U	15.6	34.4	340	ug/Kg
117-81-7	Bis(2-ethylhexyl)phthalate	34.4	U	12.2	34.4	340	ug/Kg
117-84-0	Di-n-octyl phthalate	34.4	U	3.9	34.4	340	ug/Kg
205-99-2	Benzo(b)fluoranthene	34.4	U	11.2	34.4	340	ug/Kg
207-08-9	Benzo(k)fluoranthene	34.4	U	16.2	34.4	340	ug/Kg
50-32-8	Benzo(a)pyrene	34.4	U	7.4	34.4	340	ug/Kg
193-39-5	Indeno(1,2,3-cd)pyrene	34.4	U	11.5	34.4	340	ug/Kg
53-70-3	Dibenzo(a,h)anthracene	34.4	U	9.9	34.4	340	ug/Kg

CHEMTECH 284 Sheffield Street, Mountainside, NJ 07092 Phone: 908 789 8900 Fax: 908 789 8922

Report of Analysis

Client:	LiRo Engineers, Inc.	Date Collected:	06/20/17
Project:	DDC OEGS - Cross Island Pkwy Storm Extension	Date Received:	06/20/17
Client Sample ID:	SB-05-9.5-10.0	SDG No.:	I3799
Lab Sample ID:	I3799-07	Matrix:	SOIL
Analytical Method:	SW8270	% Moisture:	3.3
Sample Wt/Vol:	30.06 Units: g	Final Vol:	1000 uL
Soil Aliquot Vol:	uL	Test:	SVOCMS Group1
Extraction Type :	Decanted : N	Level :	LOW
Injection Volume :	GPC Factor : 1.0	GPC Cleanup :	N PH :

File ID/Qc Batch:	Dilution:	Prep Date	Date Analyzed	Prep Batch ID
BG027592.D	1	06/21/17 08:55	06/22/17 12:19	PB99997

CAS Number	Parameter	Conc.	Qualifier	MDL	LOD	LOQ / CRQL	Units(Dry Weight)
191-24-2	Benzo(g,h,i)perylene	34.4	U	13.9	34.4	340	ug/Kg
95-94-3	1,2,4,5-Tetrachlorobenzene	34.4	U	13.5	34.4	340	ug/Kg
123-91-1	1,4-Dioxane	68.8	U	13.5	68.8	340	ug/Kg
58-90-2	2,3,4,6-Tetrachlorophenol	34.4	U	13.5	34.4	340	ug/Kg
SURROGATES							
367-12-4	2-Fluorophenol	120		28 - 127		77%	SPK: 150
13127-88-3	Phenol-d6	110		34 - 127		73%	SPK: 150
4165-60-0	Nitrobenzene-d5	71.9		31 - 132		72%	SPK: 100
321-60-8	2-Fluorobiphenyl	71.5		39 - 123		71%	SPK: 100
118-79-6	2,4,6-Tribromophenol	130		30 - 133		85%	SPK: 150
1718-51-0	Terphenyl-d14	80.2		37 - 115		80%	SPK: 100
INTERNAL STANDARDS							
3855-82-1	1,4-Dichlorobenzene-d4	19410	8.5				
1146-65-2	Naphthalene-d8	91104	11.32				
15067-26-2	Acenaphthene-d10	58644	15.09				
1517-22-2	Phenanthrene-d10	168889	17.84				
1719-03-5	Chrysene-d12	187590	22.2				
1520-96-3	Perylene-d12	183739	25.84				

U = Not Detected
LOQ = Limit of Quantitation
MDL = Method Detection Limit
LOD = Limit of Detection
E = Value Exceeds Calibration Range
Q = indicates LCS control criteria did not meet requirements
M = MS/MSD acceptance criteria did not meet requirements

J = Estimated Value
B = Analyte Found in Associated Method Blank
N = Presumptive Evidence of a Compound
* = Values outside of QC limits
D = Dilution
() = Laboratory InHouse Limit

CHEMTECH 284 Sheffield Street, Mountainside, NJ 07092 Phone: 908 789 8900 Fax: 908 789 8922

Report of Analysis

Client:	LiRo Engineers, Inc.	Date Collected:	06/20/17
Project:	DDC OEGS - Cross Island Pkwy Storm Extension	Date Received:	06/20/17
Client Sample ID:	SB-05-9.5-10.0	SDG No.:	I3799
Lab Sample ID:	I3799-07	Matrix:	SOIL
Analytical Method:	SW8260	% Moisture:	3.3
Sample Wt/Vol:	4.98 Units: g	Final Vol:	5000 uL
Soil Aliquot Vol:	uL	Test:	VOCMS Group1
GC Column:	RTX-VMS ID : 0.18	Level :	LOW

File ID/Qc Batch:	Dilution:	Prep Date	Date Analyzed	Prep Batch ID
VF053138.D	1		06/22/17 21:33	VF062217

CAS Number	Parameter	Conc.	Qualifier	MDL	LOD	LOQ / CRQL	Units(Dry Weight)
TARGETS							
75-71-8	Dichlorodifluoromethane	0.52	U	0.52	0.52	5.2	ug/Kg
74-87-3	Chloromethane	0.52	U	0.52	0.52	5.2	ug/Kg
75-01-4	Vinyl Chloride	0.52	U	0.52	0.52	5.2	ug/Kg
74-83-9	Bromomethane	1	U	1	1	5.2	ug/Kg
75-00-3	Chloroethane	0.52	U	0.52	0.52	5.2	ug/Kg
75-69-4	Trichlorofluoromethane	0.52	U	0.52	0.52	5.2	ug/Kg
76-13-1	1,1,2-Trichlorotrifluoroethane	0.52	U	0.52	0.52	5.2	ug/Kg
75-65-0	Tert butyl alcohol	26	U	7.7	26	26	ug/Kg
75-35-4	1,1-Dichloroethene	0.52	U	0.52	0.52	5.2	ug/Kg
67-64-1	Acetone	2.6	U	2.6	2.6	26	ug/Kg
75-15-0	Carbon Disulfide	0.52	U	0.52	0.52	5.2	ug/Kg
1634-04-4	Methyl tert-butyl Ether	0.52	U	0.52	0.52	5.2	ug/Kg
79-20-9	Methyl Acetate	1	U	1	1	5.2	ug/Kg
75-09-2	Methylene Chloride	14.7		0.52	0.52	5.2	ug/Kg
156-60-5	trans-1,2-Dichloroethene	0.52	U	0.52	0.52	5.2	ug/Kg
75-34-3	1,1-Dichloroethane	0.52	U	0.52	0.52	5.2	ug/Kg
110-82-7	Cyclohexane	0.52	U	0.52	0.52	5.2	ug/Kg
78-93-3	2-Butanone	7.8	U	3.2	7.8	26	ug/Kg
56-23-5	Carbon Tetrachloride	0.52	U	0.52	0.52	5.2	ug/Kg
156-59-2	cis-1,2-Dichloroethene	0.52	U	0.52	0.52	5.2	ug/Kg
74-97-5	Bromochloromethane	0.52	U	0.52	0.52	5.2	ug/Kg
67-66-3	Chloroform	0.52	U	0.52	0.52	5.2	ug/Kg
71-55-6	1,1,1-Trichloroethane	0.52	U	0.52	0.52	5.2	ug/Kg
108-87-2	Methylcyclohexane	0.52	U	0.52	0.52	5.2	ug/Kg
71-43-2	Benzene	0.52	U	0.39	0.52	5.2	ug/Kg
107-06-2	1,2-Dichloroethane	0.52	U	0.52	0.52	5.2	ug/Kg
79-01-6	Trichloroethene	0.52	U	0.52	0.52	5.2	ug/Kg
78-87-5	1,2-Dichloropropane	0.52	U	0.27	0.52	5.2	ug/Kg
5-27-4	Bromodichloromethane	0.52	U	0.52	0.52	5.2	ug/Kg
108-10-1	4-Methyl-2-Pentanone	2.6	U	2.6	2.6	26	ug/Kg
108-88-3	Toluene	0.52	U	0.52	0.52	5.2	ug/Kg
10061-02-6	t-1,3-Dichloropropene	0.52	U	0.52	0.52	5.2	ug/Kg

CHEMTECH 284 Sheffield Street, Mountainside, NJ 07092 Phone: 908 789 8900 Fax: 908 789 8922

Report of Analysis

Client:	LiRo Engineers, Inc.	Date Collected:	06/20/17
Project:	DDC OEGS - Cross Island Pkwy Storm Extension	Date Received:	06/20/17
Client Sample ID:	SB-05-9.5-10.0	SDG No.:	I3799
Lab Sample ID:	I3799-07	Matrix:	SOIL
Analytical Method:	SW8260	% Moisture:	3.3
Sample Wt/Vol:	4.98 Units: g	Final Vol:	5000 uL
Soil Aliquot Vol:	uL	Test:	VOCMS Group1
GC Column:	RTX-VMS ID : 0.18	Level :	LOW

File ID/Qc Batch:	Dilution:	Prep Date	Date Analyzed	Prep Batch ID
VF053138.D	1		06/22/17 21:33	VF062217

CAS Number	Parameter	Conc.	Qualifier	MDL	LOD	LOQ / CRQL	Units(Dry Weight)
10061-01-5	cis-1,3-Dichloropropene	0.52	U	0.52	0.52	5.2	ug/Kg
79-00-5	1,1,2-Trichloroethane	1	U	0.93	1	5.2	ug/Kg
591-78-6	2-Hexanone	2.6	U	2.6	2.6	26	ug/Kg
124-48-1	Dibromochloromethane	0.52	U	0.52	0.52	5.2	ug/Kg
106-93-4	1,2-Dibromoethane	0.52	U	0.52	0.52	5.2	ug/Kg
127-18-4	Tetrachloroethene	0.52	U	0.52	0.52	5.2	ug/Kg
108-90-7	Chlorobenzene	0.52	U	0.52	0.52	5.2	ug/Kg
100-41-4	Ethyl Benzene	0.52	U	0.52	0.52	5.2	ug/Kg
179601-23-1	m/p-Xylenes	1	U	0.75	1	10.4	ug/Kg
95-47-6	o-Xylene	0.52	U	0.52	0.52	5.2	ug/Kg
100-42-5	Styrene	0.52	U	0.47	0.52	5.2	ug/Kg
75-25-2	Bromoform	1.6	U	0.77	1.6	5.2	ug/Kg
98-82-8	Isopropylbenzene	0.52	U	0.5	0.52	5.2	ug/Kg
79-34-5	1,1,2,2-Tetrachloroethane	0.52	U	0.48	0.52	5.2	ug/Kg
541-73-1	1,3-Dichlorobenzene	0.52	U	0.38	0.52	5.2	ug/Kg
106-46-7	1,4-Dichlorobenzene	0.52	U	0.43	0.52	5.2	ug/Kg
95-50-1	1,2-Dichlorobenzene	0.52	U	0.52	0.52	5.2	ug/Kg
96-12-8	1,2-Dibromo-3-Chloropropane	5.2	U	0.9	5.2	5.2	ug/Kg
120-82-1	1,2,4-Trichlorobenzene	0.52	U	0.52	0.52	5.2	ug/Kg
87-61-6	1,2,3-Trichlorobenzene	1	U	0.52	1	5.2	ug/Kg
SURROGATES							
17060-07-0	1,2-Dichloroethane-d4	40.9		56 - 120		82%	SPK: 50
1868-53-7	Dibromofluoromethane	47.2		57 - 135		94%	SPK: 50
2037-26-5	Toluene-d8	44.1		67 - 123		88%	SPK: 50
460-00-4	4-Bromofluorobenzene	42.7		33 - 141		85%	SPK: 50
INTERNAL STANDARDS							
363-72-4	Pentafluorobenzene	375923	4.82				
540-36-3	1,4-Difluorobenzene	697373	5.55				
3114-55-4	Chlorobenzene-d5	613203	9.71				
3855-82-1	1,4-Dichlorobenzene-d4	263086	12.5				

CHEMTECH 284 Sheffield Street, Mountainside, NJ 07092 Phone: 908 789 8900 Fax: 908 789 8922

Report of Analysis

Client:	LiRo Engineers, Inc.	Date Collected:	06/20/17
Project:	DDC OEGS - Cross Island Pkwy Storm Extension	Date Received:	06/20/17
Client Sample ID:	SB-05-9.5-10.0	SDG No.:	I3799
Lab Sample ID:	I3799-07	Matrix:	SOIL
Analytical Method:	SW8260	% Moisture:	3.3
Sample Wt/Vol:	4.98 Units: g	Final Vol:	5000 uL
Soil Aliquot Vol:	uL	Test:	VOCMS Group1
GC Column:	RTX-VMS ID : 0.18	Level :	LOW

File ID/Qc Batch:	Dilution:	Prep Date	Date Analyzed	Prep Batch ID
VF053138.D	1		06/22/17 21:33	VF062217

CAS Number	Parameter	Conc.	Qualifier	MDL	LOD	LOQ / CRQL	Units

U = Not Detected
LOQ = Limit of Quantitation
MDL = Method Detection Limit
LOD = Limit of Detection
E = Value Exceeds Calibration Range
Q = indicates LCS control criteria did not meet requirements
M = MS/MSD acceptance criteria did not meet requirements

J = Estimated Value
B = Analyte Found in Associated Method Blank
N = Presumptive Evidence of a Compound
* = Values outside of QC limits
D = Dilution
() = Laboratory InHouse Limit

CHEMTECH 284 Sheffield Street, Mountainside, NJ 07092 Phone: 908 789 8900 Fax: 908 789 8922

Report of Analysis

Client:	LiRo Engineers, Inc.	Date Collected:	06/20/17
Project:	DDC OEGS - Cross Island Pkwy Storm Extension	Date Received:	06/20/17
Client Sample ID:	SB-05-COMP	SDG No.:	I3799
Lab Sample ID:	I3799-08	Matrix:	SOIL
Analytical Method:	8015B DRO	% Moisture:	6 Decanted:
Sample Wt/Vol:	30.04 Units: g	Final Vol:	1 mL
Soil Aliquot Vol:	uL	Test:	Diesel Range Organics
Extraction Type:		Injection Volume	
GPC Factor :	PH :		

File ID/Qc Batch:	Dilution:	Prep Date	Date Analyzed	Prep Batch ID
FD015471.D	1	06/21/17 08:56	06/21/17 23:37	PB99998

CAS Number	Parameter	Conc.	Qualifier	MDL	LOD	LOQ / CRQL	Units(Dry Weight)
TARGETS							
DRO	DRO	5100		885	885	1770	ug/kg
SURROGATES							
16416-32-3	Tetracosane-d50	14.1		37 - 130		70%	SPK: 20

Comments:

U = Not Detected
LOQ = Limit of Quantitation
MDL = Method Detection Limit
LOD = Limit of Detection
E = Value Exceeds Calibration Range
P = Indicates >25% difference for detected concentrations between the two GC columns
Q = indicates LCS control criteria did not meet requirements
M = MS/MSD acceptance criteria did not meet requirements

J = Estimated Value
B = Analyte Found in Associated Method Blank
N = Presumptive Evidence of a Compound
* = Values outside of QC limits
D = Dilution
S = Indicates estimated value where valid five-point calibration was not performed prior to analyte detection in sample.
() = Laboratory InHouse Limit

CHEMTECH 284 Sheffield Street, Mountainside, NJ 07092 Phone: 908 789 8900 Fax: 908 789 8922

Report of Analysis

Client:	LiRo Engineers, Inc.	Date Collected:	06/20/17
Project:	DDC OEGS - Cross Island Pkwy Storm Extension	Date Received:	06/20/17
Client Sample ID:	SB-05-COMP	SDG No.:	I3799
Lab Sample ID:	I3799-08	Matrix:	SOIL
Analytical Method:	8015B GRO	% Moisture:	6 Decanted:
Sample Wt/Vol:	4.95 Units: g	Final Vol:	5 mL
Soil Aliquot Vol:	uL	Test:	Gasoline Range Organics
Extraction Type:		Injection Volume :	
GPC Factor :	PH :		

File ID/Qc Batch:	Dilution:	Date Analyzed	Prep Batch ID
FB009693.D	1	06/24/17 22:36	FB062417

CAS Number	Parameter	Conc.	Qualifier	MDL	LOD	LOQ / CRQL	Units(Dry Weight)
TARGETS							
GRO	GRO	24	U	13	24	48	ug/kg
SURROGATES							
98-08-8	Alpha,Alpha,Alpha-Trifluoroto	15.2		50 - 150		76%	SPK: 20

Comments:

U = Not Detected
LOQ = Limit of Quantitation
MDL = Method Detection Limit
LOD = Limit of Detection
= Value Exceeds Calibration Range
P = Indicates >25% difference for detected concentrations between the two GC columns
Q = indicates LCS control criteria did not meet requirements
M = MS/MSD acceptance criteria did not meet requirements

J = Estimated Value
B = Analyte Found in Associated Method Blank
N = Presumptive Evidence of a Compound
* = Values outside of QC limits
D = Dilution
S = Indicates estimated value where valid five-point calibration was not performed prior to analyte detection in sample.
() = Laboratory InHouse Limit

CHEMTECH 284 Sheffield Street, Mountainside, NJ 07092 Phone: 908 789 8900 Fax: 908 789 8922

Report of Analysis

Client:	LiRo Engineers, Inc.	Date Collected:	06/20/17 08:15
Project:	DDC OEGS - Cross Island Pkwy Storm Extension	Date Received:	06/20/17
Client Sample ID:	SB-05-COMP	SDG No.:	I3799
Lab Sample ID:	I3799-08	Matrix:	SOIL
		% Solid:	94

Parameter	Conc.	Qua.	DF	MDL	LOD	LOQ / CRQL	Units	Prep Date	Date Ana.	Ana Met.
Paint Filter	1	U	1	1	1	1	ml/100gm		06/21/17 12:12	9095A

Comments:

U = Not Detected
LOQ = Limit of Quantitation
MDL = Method Detection Limit
LOD = Limit of Detection
D = Dilution
Q = indicates LCS control criteria did not meet requirements
H = Sample Analysis Out Of Hold Time

J = Estimated Value
B = Analyte Found in Associated Method Blank
* = indicates the duplicate analysis is not within control limits.
E = Indicates the reported value is estimated because of the presence of interference.
OR = Over Range
N =Spiked sample recovery not within control limits

CHEMTECH 284 Sheffield Street, Mountainside, NJ 07092 Phone: 908 789 8900 Fax: 908 789 8922

Report of Analysis

Client:	LiRo Engineers, Inc.	Date Collected:	06/20/17
Project:	DDC OEGS - Cross Island Pkwy Storm Extension	Date Received:	06/20/17
Client Sample ID:	SB-06-9.5-10.0	SDG No.:	I3799
Lab Sample ID:	I3799-09	Matrix:	SOIL
Level (low/med):	low	% Solid:	93.6

Cas	Parameter	Conc.	Qua.	DF	MDL	LOD	LOQ / CRQL	Units(Dry Weight)	Prep Date	Date Ana.	Ana Met.
7429-90-5	Aluminum	1750		1	0.751	1.12	4.47	mg/Kg	06/21/17 09:47	06/22/17 13:18	SW6010
7440-36-0	Antimony	0.559	UN	1	0.501	0.559	2.24	mg/Kg	06/21/17 09:47	06/22/17 13:18	SW6010
7440-38-2	Arsenic	1.82		1	0.224	0.224	0.894	mg/Kg	06/21/17 09:47	06/22/17 13:18	SW6010
7440-39-3	Barium	11	N	1	0.358	1.12	4.47	mg/Kg	06/21/17 09:47	06/22/17 13:18	SW6010
7440-41-7	Beryllium	0.091	J	1	0.054	0.067	0.268	mg/Kg	06/21/17 09:47	06/22/17 13:18	SW6010
7440-43-9	Cadmium	0.067	U	1	0.054	0.067	0.268	mg/Kg	06/21/17 09:47	06/22/17 13:18	SW6010
7440-70-2	Calcium	297		1	0.957	22.4	89.4	mg/Kg	06/21/17 09:47	06/22/17 13:18	SW6010
7440-47-3	Chromium	6.11		1	0.112	0.112	0.447	mg/Kg	06/21/17 09:47	06/22/17 13:18	SW6010
7440-48-4	Cobalt	2.19		1	0.335	0.335	1.34	mg/Kg	06/21/17 09:47	06/22/17 13:18	SW6010
7440-50-8	Copper	6.53		1	0.224	0.224	0.894	mg/Kg	06/21/17 09:47	06/22/17 13:18	SW6010
7439-89-6	Iron	6530		1	1.12	1.12	4.47	mg/Kg	06/21/17 09:47	06/22/17 13:18	SW6010
7439-92-1	Lead	3.34		1	0.107	0.224	0.536	mg/Kg	06/21/17 09:47	06/22/17 13:18	SW6010
7439-95-4	Magnesium	670		1	4.09	22.4	89.4	mg/Kg	06/21/17 09:47	06/22/17 13:18	SW6010
7439-96-5	Manganese	52.5		1	0.17	0.224	0.894	mg/Kg	06/21/17 09:47	06/22/17 13:18	SW6010
7439-97-6	Mercury	0.007	U	1	0.007	0.007	0.014	mg/Kg	06/20/17 18:43	06/21/17 19:03	SW7471A
7440-02-0	Nickel	9.87		1	0.411	0.447	1.79	mg/Kg	06/21/17 09:47	06/22/17 13:18	SW6010
7440-09-7	Potassium	376		1	3.13	22.4	89.4	mg/Kg	06/21/17 09:47	06/22/17 13:18	SW6010
7782-49-2	Selenium	2.18		1	0.224	0.224	0.894	mg/Kg	06/21/17 09:47	06/22/17 13:18	SW6010
7440-22-4	Silver	0.393	J	1	0.112	0.112	0.447	mg/Kg	06/21/17 09:47	06/22/17 13:18	SW6010
7440-23-5	Sodium	28.3	J	1	2.25	22.4	89.4	mg/Kg	06/21/17 09:47	06/22/17 13:18	SW6010
7440-28-0	Thallium	0.447	U	1	0.241	0.447	1.79	mg/Kg	06/21/17 09:47	06/22/17 13:18	SW6010
7440-62-2	Vanadium	7.41		1	0.447	0.447	1.79	mg/Kg	06/21/17 09:47	06/22/17 13:18	SW6010
7440-66-6	Zinc	7.84	N	1	0.447	0.447	1.79	mg/Kg	06/21/17 09:47	06/22/17 13:18	SW6010

Color Before:	Brown	Clarity Before:		Texture:	Medium
Color After:	Yellow	Clarity After:		Artifacts:	No
Comments:	METALS-TAL				

U = Not Detected
LOQ = Limit of Quantitation
MDL = Method Detection Limit
LOD = Limit of Detection
D = Dilution
Q = indicates LCS control criteria did not meet requirements

J = Estimated Value
B = Analyte Found in Associated Method Blank
* = indicates the duplicate analysis is not within control limits.
E = Indicates the reported value is estimated because of the presence of interference.
OR = Over Range
N =Spiked sample recovery not within control limits

CHEMTECH 284 Sheffield Street, Mountainside, NJ 07092 Phone: 908 789 8900 Fax: 908 789 8922

Report of Analysis

Client:	LiRo Engineers, Inc.	Date Collected:	06/20/17
Project:	DDC OEGS - Cross Island Pkwy Storm Extension	Date Received:	06/20/17
Client Sample ID:	SB-06-9.5-10.0	SDG No.:	I3799
Lab Sample ID:	I3799-09	Matrix:	SOIL
Analytical Method:	SW8082A	% Moisture:	6.4 Decanted:
Sample Wt/Vol:	30.15 Units: g	Final Vol:	10000 uL
Soil Aliquot Vol:	uL	Test:	PCB
Extraction Type:		Injection Volume	
GPC Factor :	1.0 PH :		

File ID/Qc Batch:	Dilution:	Prep Date	Date Analyzed	Prep Batch ID
PO035495.D	1	06/21/17 08:13	06/22/17 20:09	PB99995

CAS Number	Parameter	Conc.	Qualifier	MDL	LOD	LOQ / CRQL	Units(Dry Weight)
TARGETS							
12674-11-2	Aroclor-1016	3.5	U	3.5	3.5	18.1	ug/kg
11104-28-2	Aroclor-1221	3.5	U	3.5	3.5	18.1	ug/kg
11141-16-5	Aroclor-1232	3.5	U	3.5	3.5	18.1	ug/kg
53469-21-9	Aroclor-1242	3.5	U	3.5	3.5	18.1	ug/kg
12672-29-6	Aroclor-1248	3.5	U	3.5	3.5	18.1	ug/kg
11097-69-1	Aroclor-1254	3.5	U	1.6	3.5	18.1	ug/kg
37324-23-5	Aroclor-1262	3.5	U	3.5	3.5	18.1	ug/kg
11100-14-4	Aroclor-1268	3.5	U	3.5	3.5	18.1	ug/kg
11096-82-5	Aroclor-1260	3.5	U	3.5	3.5	18.1	ug/kg
SURROGATES							
877-09-8	Tetrachloro-m-xylene	22.6		10 - 166		113%	SPK: 20
2051-24-3	Decachlorobiphenyl	22.1		60 - 125		111%	SPK: 20

Comments:

U = Not Detected
LOQ = Limit of Quantitation
MDL = Method Detection Limit
LOD = Limit of Detection
E = Value Exceeds Calibration Range
P = Indicates >25% difference for detected concentrations between the two GC columns
Q = indicates LCS control criteria did not meet requirements
M = MS/MSD acceptance criteria did not meet requirements

J = Estimated Value
B = Analyte Found in Associated Method Blank
N = Presumptive Evidence of a Compound
* = Values outside of QC limits
D = Dilution
S = Indicates estimated value where valid five-point calibration was not performed prior to analyte detection in sample.
() = Laboratory InHouse Limit

CHEMTECH 284 Sheffield Street, Mountainside, NJ 07092 Phone: 908 789 8900 Fax: 908 789 8922

Report of Analysis

Client:	LiRo Engineers, Inc.	Date Collected:	06/20/17
Project:	DDC OEGS - Cross Island Pkwy Storm Extension	Date Received:	06/20/17
Client Sample ID:	SB-06-9.5-10.0	SDG No.:	I3799
Lab Sample ID:	I3799-09	Matrix:	SOIL
Analytical Method:	SW8081	% Moisture:	6.4 Decanted:
Sample Wt/Vol:	30.15 Units: g	Final Vol:	10000 uL
Soil Aliquot Vol:	uL	Test:	PESTICIDE Group1
Extraction Type:		Injection Volume :	
GPC Factor :	1.0 PH :		

File ID/Qc Batch:	Dilution:	Prep Date	Date Analyzed	Prep Batch ID
PL026300.D	1	06/21/17 08:16	06/21/17 17:36	PB99996

CAS Number	Parameter	Conc.	Qualifier	MDL	LOD	LOQ / CRQL	Units(Dry Weight)
TARGETS							
319-84-6	alpha-BHC	0.351	U	0.138	0.351	1.8	ug/kg
319-85-7	beta-BHC	0.351	U	0.191	0.351	1.8	ug/kg
319-86-8	delta-BHC	0.351	U	0.106	0.351	1.8	ug/kg
58-89-9	gamma-BHC (Lindane)	0.351	U	0.16	0.351	1.8	ug/kg
76-44-8	Heptachlor	0.351	U	0.149	0.351	1.8	ug/kg
309-00-2	Aldrin	0.351	U	0.106	0.351	1.8	ug/kg
1024-57-3	Heptachlor epoxide	0.351	U	0.17	0.351	1.8	ug/kg
959-98-8	Endosulfan I	0.351	U	0.16	0.351	1.8	ug/kg
60-57-1	Dieldrin	0.351	U	0.138	0.351	1.8	ug/kg
72-55-9	4,4-DDE	0.351	U	0.213	0.351	1.8	ug/kg
72-20-8	Endrin	0.351	U	0.191	0.351	1.8	ug/kg
33213-65-9	Endosulfan II	0.351	U	0.149	0.351	1.8	ug/kg
72-54-8	4,4-DDD	0.351	U	0.181	0.351	1.8	ug/kg
1031-07-8	Endosulfan Sulfate	0.351	U	0.16	0.351	1.8	ug/kg
50-29-3	4,4-DDT	0.351	U	0.149	0.351	1.8	ug/kg
72-43-5	Methoxychlor	0.351	U	0.181	0.351	1.8	ug/kg
53494-70-5	Endrin ketone	0.351	U	0.138	0.351	1.8	ug/kg
7421-93-4	Endrin aldehyde	0.351	U	0.16	0.351	1.8	ug/kg
5103-71-9	alpha-Chlordane	0.351	U	0.149	0.351	1.8	ug/kg
5103-74-2	gamma-Chlordane	0.351	U	0.138	0.351	1.8	ug/kg
8001-35-2	Toxaphene	3.5	U	3.5	3.5	18.1	ug/kg
SURROGATES							
2051-24-3	Decachlorobiphenyl	26.7		10 - 169		134%	SPK: 20
877-09-8	Tetrachloro-m-xylene	21.9		31 - 151		110%	SPK: 20

CHEMTECH 284 Sheffield Street, Mountainside, NJ 07092 Phone: 908 789 8900 Fax: 908 789 8922

Report of Analysis

Client:	LiRo Engineers, Inc.	Date Collected:	06/20/17
Project:	DDC OEGS - Cross Island Pkwy Storm Extension	Date Received:	06/20/17
Client Sample ID:	SB-06-9.5-10.0	SDG No.:	I3799
Lab Sample ID:	I3799-09	Matrix:	SOIL
Analytical Method:	SW8081	% Moisture:	6.4 Decanted:
Sample Wt/Vol:	30.15 Units: g	Final Vol:	10000 uL
Soil Aliquot Vol:	uL	Test:	PESTICIDE Group1
Extraction Type:		Injection Volume :	
GPC Factor :	1.0 PH :		

File ID/Qc Batch:	Dilution:	Prep Date	Date Analyzed	Prep Batch ID
PL026300.D	1	06/21/17 08:16	06/21/17 17:36	PB99996

CAS Number	Parameter	Conc.	Qualifier	MDL	LOD	LOQ / CRQL	Units

Comments:

U = Not Detected
LOQ = Limit of Quantitation
MDL = Method Detection Limit
LOD = Limit of Detection
E = Value Exceeds Calibration Range
P = Indicates >25% difference for detected concentrations between the two GC columns
Q = indicates LCS control criteria did not meet requirements
M = MS/MSD acceptance criteria did not meet requirements

J = Estimated Value
B = Analyte Found in Associated Method Blank
N = Presumptive Evidence of a Compound
* = Values outside of QC limits
D = Dilution
S = Indicates estimated value where valid five-point calibration was not performed prior to analyte detection in sample.
() = Laboratory InHouse Limit

CHEMTECH 284 Sheffield Street, Mountainside, NJ 07092 Phone: 908 789 8900 Fax: 908 789 8922

Report of Analysis

Client:	LiRo Engineers, Inc.	Date Collected:	06/20/17
Project:	DDC OEGS - Cross Island Pkwy Storm Extension	Date Received:	06/20/17
Client Sample ID:	SB-06-9.5-10.0	SDG No.:	I3799
Lab Sample ID:	I3799-09	Matrix:	SOIL
Analytical Method:	SW8270	% Moisture:	6.4
Sample Wt/Vol:	30.04 Units: g	Final Vol:	1000 uL
Soil Aliquot Vol:	uL	Test:	SVOCMS Group1
Extraction Type :	Decanted : N	Level :	LOW
Injection Volume :	GPC Factor : 1.0	GPC Cleanup :	N PH :

File ID/Qc Batch:	Dilution:	Prep Date	Date Analyzed	Prep Batch ID
BG027593.D	1	06/21/17 08:55	06/22/17 12:59	PB99997

CAS Number	Parameter	Conc.	Qualifier	MDL	LOD	LOQ / CRQL	Units(Dry Weight)
TARGETS							
100-52-7	Benzaldehyde	35.6	U	18.6	35.6	350	ug/Kg
108-95-2	Phenol	35.6	U	8.2	35.6	350	ug/Kg
111-44-4	bis(2-Chloroethyl)ether	35.6	U	17.1	35.6	350	ug/Kg
95-57-8	2-Chlorophenol	35.6	U	18.8	35.6	350	ug/Kg
95-48-7	2-Methylphenol	35.6	U	19.3	35.6	350	ug/Kg
108-60-1	2,2-oxybis(1-Chloropropane)	35.6	U	14.7	35.6	350	ug/Kg
98-86-2	Acetophenone	35.6	U	10.9	35.6	350	ug/Kg
65794-96-9	3+4-Methylphenols	35.6	U	18.5	35.6	350	ug/Kg
621-64-7	n-Nitroso-di-n-propylamine	35.6	U	17.9	35.6	350	ug/Kg
67-72-1	Hexachloroethane	35.6	U	15.9	35.6	350	ug/Kg
98-95-3	Nitrobenzene	35.6	U	13.4	35.6	350	ug/Kg
78-59-1	Isophorone	35.6	U	11.7	35.6	350	ug/Kg
88-75-5	2-Nitrophenol	35.6	U	17.2	35.6	350	ug/Kg
105-67-9	2,4-Dimethylphenol	35.6	U	20.2	35.6	350	ug/Kg
111-91-1	bis(2-Chloroethoxy)methane	35.6	U	20.5	35.6	350	ug/Kg
120-83-2	2,4-Dichlorophenol	35.6	U	13.6	35.6	350	ug/Kg
91-20-3	Naphthalene	35.6	U	12.3	35.6	350	ug/Kg
106-47-8	4-Chloroaniline	35.6	U	25.1	35.6	350	ug/Kg
87-68-3	Hexachlorobutadiene	35.6	U	12.9	35.6	350	ug/Kg
105-60-2	Caprolactam	71.1	U	16.5	71.1	350	ug/Kg
59-50-7	4-Chloro-3-methylphenol	35.6	U	15.8	35.6	350	ug/Kg
91-57-6	2-Methylnaphthalene	35.6	U	9	35.6	350	ug/Kg
77-47-4	Hexachlorocyclopentadiene	35.6	U	8.6	35.6	350	ug/Kg
88-06-2	2,4,6-Trichlorophenol	35.6	U	10.9	35.6	350	ug/Kg
95-95-4	2,4,5-Trichlorophenol	35.6	U	25	35.6	350	ug/Kg
92-52-4	1,1-Biphenyl	35.6	U	13.4	35.6	350	ug/Kg
91-58-7	2-Chloronaphthalene	35.6	U	8.1	35.6	350	ug/Kg
88-74-4	2-Nitroaniline	35.6	U	15.8	35.6	350	ug/Kg
131-11-3	Dimethylphthalate	260	J	9.6	35.6	350	ug/Kg
208-96-8	Acenaphthylene	35.6	U	9	35.6	350	ug/Kg
606-20-2	2,6-Dinitrotoluene	35.6	U	14.5	35.6	350	ug/Kg

CHEMTECH 284 Sheffield Street, Mountainside, NJ 07092 Phone: 908 789 8900 Fax: 908 789 8922

Report of Analysis

Client:	LiRo Engineers, Inc.	Date Collected:	06/20/17
Project:	DDC OEGS - Cross Island Pkwy Storm Extension	Date Received:	06/20/17
Client Sample ID:	SB-06-9.5-10.0	SDG No.:	I3799
Lab Sample ID:	I3799-09	Matrix:	SOIL
Analytical Method:	SW8270	% Moisture:	6.4
Sample Wt/Vol:	30.04 Units: g	Final Vol:	1000 uL
Soil Aliquot Vol:	uL	Test:	SVOCMS Group1
Extraction Type :	Decanted : N	Level :	LOW
Injection Volume :	GPC Factor : 1.0	GPC Cleanup :	N PH :

File ID/Qc Batch:	Dilution:	Prep Date	Date Analyzed	Prep Batch ID
BG027593.D	1	06/21/17 08:55	06/22/17 12:59	PB99997

CAS Number	Parameter	Conc.	Qualifier	MDL	LOD	LOQ / CRQL	Units(Dry Weight)
99-09-2	3-Nitroaniline	71.1	U	22.8	71.1	350	ug/Kg
83-32-9	Acenaphthene	35.6	U	10	35.6	350	ug/Kg
51-28-5	2,4-Dinitrophenol	280	U	36.2	280	350	ug/Kg
100-02-7	4-Nitrophenol	180	U	66	180	350	ug/Kg
132-64-9	Dibenzofuran	35.6	U	13.9	35.6	350	ug/Kg
121-14-2	2,4-Dinitrotoluene	35.6	U	10.7	35.6	350	ug/Kg
84-66-2	Diethylphthalate	35.6	U	5.5	35.6	350	ug/Kg
7005-72-3	4-Chlorophenyl-phenylether	35.6	U	19.3	35.6	350	ug/Kg
86-73-7	Fluorene	35.6	U	13.4	35.6	350	ug/Kg
100-01-6	4-Nitroaniline	71.1	U	46.3	71.1	350	ug/Kg
534-52-1	4,6-Dinitro-2-methylphenol	180	U	20.4	180	350	ug/Kg
86-30-6	n-Nitrosodiphenylamine	35.6	U	8.5	35.6	350	ug/Kg
101-55-3	4-Bromophenyl-phenylether	35.6	U	6.9	35.6	350	ug/Kg
118-74-1	Hexachlorobenzene	35.6	U	14.5	35.6	350	ug/Kg
1912-24-9	Atrazine	35.6	U	18.8	35.6	350	ug/Kg
87-86-5	Pentachlorophenol	35.6	U	24.3	35.6	350	ug/Kg
85-01-8	Phenanthrene	35.6	U	9.6	35.6	350	ug/Kg
120-12-7	Anthracene	35.6	U	7.3	35.6	350	ug/Kg
86-74-8	Carbazole	35.6	U	7.8	35.6	350	ug/Kg
84-74-2	Di-n-butylphthalate	35.6	U	28	35.6	350	ug/Kg
206-44-0	Fluoranthene	35.6	U	7.1	35.6	350	ug/Kg
129-00-0	Pyrene	35.6	U	8.5	35.6	350	ug/Kg
85-68-7	Butylbenzylphthalate	35.6	U	17.1	35.6	350	ug/Kg
91-94-1	3,3-Dichlorobenzidine	35.6	U	22.8	35.6	350	ug/Kg
56-55-3	Benzo(a)anthracene	35.6	U	17	35.6	350	ug/Kg
218-01-9	Chrysene	35.6	U	16.1	35.6	350	ug/Kg
117-81-7	Bis(2-ethylhexyl)phthalate	35.6	U	12.6	35.6	350	ug/Kg
117-84-0	Di-n-octyl phthalate	35.6	U	4.1	35.6	350	ug/Kg
205-99-2	Benzo(b)fluoranthene	35.6	U	11.6	35.6	350	ug/Kg
207-08-9	Benzo(k)fluoranthene	35.6	U	16.8	35.6	350	ug/Kg
50-32-8	Benzo(a)pyrene	35.6	U	7.7	35.6	350	ug/Kg
193-39-5	Indeno(1,2,3-cd)pyrene	35.6	U	11.8	35.6	350	ug/Kg
53-70-3	Dibenzo(a,h)anthracene	35.6	U	10.2	35.6	350	ug/Kg

CHEMTECH 284 Sheffield Street, Mountainside, NJ 07092 Phone: 908 789 8900 Fax: 908 789 8922

Report of Analysis

Client:	LiRo Engineers, Inc.	Date Collected:	06/20/17
Project:	DDC OEGS - Cross Island Pkwy Storm Extension	Date Received:	06/20/17
Client Sample ID:	SB-06-9.5-10.0	SDG No.:	I3799
Lab Sample ID:	I3799-09	Matrix:	SOIL
Analytical Method:	SW8270	% Moisture:	6.4
Sample Wt/Vol:	30.04 Units: g	Final Vol:	1000 uL
Soil Aliquot Vol:	uL	Test:	SVOCMS Group1
Extraction Type :	Decanted : N	Level :	LOW
Injection Volume :	GPC Factor : 1.0	GPC Cleanup :	N PH :

File ID/Qc Batch:	Dilution:	Prep Date	Date Analyzed	Prep Batch ID
BG027593.D	1	06/21/17 08:55	06/22/17 12:59	PB99997

CAS Number	Parameter	Conc.	Qualifier	MDL	LOD	LOQ / CRQL	Units(Dry Weight)
191-24-2	Benzo(g,h,i)perylene	35.6	U	14.4	35.6	350	ug/Kg
95-94-3	1,2,4,5-Tetrachlorobenzene	35.6	U	14	35.6	350	ug/Kg
123-91-1	1,4-Dioxane	71.1	U	14	71.1	350	ug/Kg
58-90-2	2,3,4,6-Tetrachlorophenol	35.6	U	14	35.6	350	ug/Kg
SURROGATES							
367-12-4	2-Fluorophenol	120		28 - 127		78%	SPK: 150
13127-88-3	Phenol-d6	110		34 - 127		71%	SPK: 150
4165-60-0	Nitrobenzene-d5	71.4		31 - 132		71%	SPK: 100
321-60-8	2-Fluorobiphenyl	74.5		39 - 123		74%	SPK: 100
118-79-6	2,4,6-Tribromophenol	130		30 - 133		89%	SPK: 150
1718-51-0	Terphenyl-d14	79.8		37 - 115		80%	SPK: 100
INTERNAL STANDARDS							
3855-82-1	1,4-Dichlorobenzene-d4	18696	8.51				
1146-65-2	Naphthalene-d8	86988	11.32				
15067-26-2	Acenaphthene-d10	54598	15.09				
1517-22-2	Phenanthrene-d10	166896	17.84				
1719-03-5	Chrysene-d12	182088	22.2				
1520-96-3	Perylene-d12	177531	25.84				

U = Not Detected
LOQ = Limit of Quantitation
MDL = Method Detection Limit
LOD = Limit of Detection
E = Value Exceeds Calibration Range
Q = indicates LCS control criteria did not meet requirements
M = MS/MSD acceptance criteria did not meet requirements

J = Estimated Value
B = Analyte Found in Associated Method Blank
N = Presumptive Evidence of a Compound
* = Values outside of QC limits
D = Dilution
() = Laboratory InHouse Limit

CHEMTECH 284 Sheffield Street, Mountainside, NJ 07092 Phone: 908 789 8900 Fax: 908 789 8922

Report of Analysis

Client:	LiRo Engineers, Inc.	Date Collected:	06/20/17
Project:	DDC OEGS - Cross Island Pkwy Storm Extension	Date Received:	06/20/17
Client Sample ID:	SB-06-9.5-10.0	SDG No.:	I3799
Lab Sample ID:	I3799-09	Matrix:	SOIL
Analytical Method:	SW8260	% Moisture:	6.4
Sample Wt/Vol:	5 Units: g	Final Vol:	5000 uL
Soil Aliquot Vol:	uL	Test:	VOCMS Group1
GC Column:	RTX-VMS ID : 0.18	Level :	LOW

File ID/Qc Batch:	Dilution:	Prep Date	Date Analyzed	Prep Batch ID
VF053152.D	1		06/23/17 15:17	VF062317

CAS Number	Parameter	Conc.	Qualifier	MDL	LOD	LOQ / CRQL	Units(Dry Weight)
TARGETS							
75-71-8	Dichlorodifluoromethane	0.53	U	0.53	0.53	5.3	ug/Kg
74-87-3	Chloromethane	0.53	U	0.53	0.53	5.3	ug/Kg
75-01-4	Vinyl Chloride	0.53	U	0.53	0.53	5.3	ug/Kg
74-83-9	Bromomethane	1.1	U	1.1	1.1	5.3	ug/Kg
75-00-3	Chloroethane	0.53	U	0.53	0.53	5.3	ug/Kg
75-69-4	Trichlorofluoromethane	0.53	U	0.53	0.53	5.3	ug/Kg
76-13-1	1,1,2-Trichlorotrifluoroethane	0.53	U	0.53	0.53	5.3	ug/Kg
75-65-0	Tert butyl alcohol	26.7	U	7.9	26.7	26.7	ug/Kg
75-35-4	1,1-Dichloroethene	0.53	U	0.53	0.53	5.3	ug/Kg
67-64-1	Acetone	2.7	U	2.7	2.7	26.7	ug/Kg
75-15-0	Carbon Disulfide	0.53	U	0.53	0.53	5.3	ug/Kg
1634-04-4	Methyl tert-butyl Ether	0.53	U	0.53	0.53	5.3	ug/Kg
79-20-9	Methyl Acetate	1.1	U	1.1	1.1	5.3	ug/Kg
75-09-2	Methylene Chloride	32.9		0.53	0.53	5.3	ug/Kg
156-60-5	trans-1,2-Dichloroethene	0.53	U	0.53	0.53	5.3	ug/Kg
75-34-3	1,1-Dichloroethane	0.53	U	0.53	0.53	5.3	ug/Kg
110-82-7	Cyclohexane	0.53	U	0.53	0.53	5.3	ug/Kg
78-93-3	2-Butanone	8	U	3.3	8	26.7	ug/Kg
56-23-5	Carbon Tetrachloride	0.53	U	0.53	0.53	5.3	ug/Kg
156-59-2	cis-1,2-Dichloroethene	0.53	U	0.53	0.53	5.3	ug/Kg
74-97-5	Bromochloromethane	0.53	U	0.53	0.53	5.3	ug/Kg
67-66-3	Chloroform	0.53	U	0.53	0.53	5.3	ug/Kg
71-55-6	1,1,1-Trichloroethane	0.53	U	0.53	0.53	5.3	ug/Kg
108-87-2	Methylcyclohexane	0.53	U	0.53	0.53	5.3	ug/Kg
71-43-2	Benzene	0.53	U	0.41	0.53	5.3	ug/Kg
107-06-2	1,2-Dichloroethane	0.53	U	0.53	0.53	5.3	ug/Kg
79-01-6	Trichloroethene	0.53	U	0.53	0.53	5.3	ug/Kg
78-87-5	1,2-Dichloropropane	0.53	U	0.28	0.53	5.3	ug/Kg
75-27-4	Bromodichloromethane	0.53	U	0.53	0.53	5.3	ug/Kg
108-10-1	4-Methyl-2-Pentanone	2.7	U	2.7	2.7	26.7	ug/Kg
108-88-3	Toluene	0.53	U	0.53	0.53	5.3	ug/Kg
10061-02-6	t-1,3-Dichloropropene	0.53	U	0.53	0.53	5.3	ug/Kg

CHEMTECH 284 Sheffield Street, Mountainside, NJ 07092 Phone: 908 789 8900 Fax: 908 789 8922

Report of Analysis

Client:	LiRo Engineers, Inc.	Date Collected:	06/20/17
Project:	DDC OEGS - Cross Island Pkwy Storm Extension	Date Received:	06/20/17
Client Sample ID:	SB-06-9.5-10.0	SDG No.:	I3799
Lab Sample ID:	I3799-09	Matrix:	SOIL
Analytical Method:	SW8260	% Moisture:	6.4
Sample Wt/Vol:	5 Units: g	Final Vol:	5000 uL
Soil Aliquot Vol:	uL	Test:	VOCMS Group1
GC Column:	RTX-VMS ID : 0.18	Level :	LOW

File ID/Qc Batch:	Dilution:	Prep Date	Date Analyzed	Prep Batch ID
VF053152.D	1		06/23/17 15:17	VF062317

CAS Number	Parameter	Conc.	Qualifier	MDL	LOD	LOQ / CRQL	Units(Dry Weight)
10061-01-5	cis-1,3-Dichloropropene	0.53	U	0.53	0.53	5.3	ug/Kg
79-00-5	1,1,2-Trichloroethane	1.1	U	0.96	1.1	5.3	ug/Kg
591-78-6	2-Hexanone	2.7	U	2.7	2.7	26.7	ug/Kg
124-48-1	Dibromochloromethane	0.53	U	0.53	0.53	5.3	ug/Kg
106-93-4	1,2-Dibromoethane	0.53	U	0.53	0.53	5.3	ug/Kg
127-18-4	Tetrachloroethene	0.53	U	0.53	0.53	5.3	ug/Kg
108-90-7	Chlorobenzene	0.53	U	0.53	0.53	5.3	ug/Kg
100-41-4	Ethyl Benzene	0.53	U	0.53	0.53	5.3	ug/Kg
179601-23-1	m/p-Xylenes	1.1	U	0.77	1.1	10.7	ug/Kg
95-47-6	o-Xylene	0.53	U	0.53	0.53	5.3	ug/Kg
100-42-5	Styrene	0.53	U	0.48	0.53	5.3	ug/Kg
75-25-2	Bromoform	1.6	U	0.79	1.6	5.3	ug/Kg
98-82-8	Isopropylbenzene	0.53	U	0.51	0.53	5.3	ug/Kg
79-34-5	1,1,2,2-Tetrachloroethane	0.53	U	0.49	0.53	5.3	ug/Kg
541-73-1	1,3-Dichlorobenzene	0.53	U	0.4	0.53	5.3	ug/Kg
106-46-7	1,4-Dichlorobenzene	0.53	U	0.44	0.53	5.3	ug/Kg
95-50-1	1,2-Dichlorobenzene	0.53	U	0.53	0.53	5.3	ug/Kg
96-12-8	1,2-Dibromo-3-Chloropropane	5.3	U	0.93	5.3	5.3	ug/Kg
120-82-1	1,2,4-Trichlorobenzene	0.53	U	0.53	0.53	5.3	ug/Kg
87-61-6	1,2,3-Trichlorobenzene	1.1	U	0.53	1.1	5.3	ug/Kg
SURROGATES							
17060-07-0	1,2-Dichloroethane-d4	41.8		56 - 120		84%	SPK: 50
1868-53-7	Dibromofluoromethane	50.9		57 - 135		102%	SPK: 50
2037-26-5	Toluene-d8	48.5		67 - 123		97%	SPK: 50
460-00-4	4-Bromofluorobenzene	45.6		33 - 141		91%	SPK: 50
INTERNAL STANDARDS							
363-72-4	Pentafluorobenzene	270383	4.82				
540-36-3	1,4-Difluorobenzene	472150	5.55				
3114-55-4	Chlorobenzene-d5	425153	9.71				
855-82-1	1,4-Dichlorobenzene-d4	185215	12.5				

CHEMTECH 284 Sheffield Street, Mountainside, NJ 07092 Phone: 908 789 8900 Fax: 908 789 8922

Report of Analysis

Client:	LiRo Engineers, Inc.	Date Collected:	06/20/17
Project:	DDC OEGS - Cross Island Pkwy Storm Extension	Date Received:	06/20/17
Client Sample ID:	SB-06-9.5-10.0	SDG No.:	I3799
Lab Sample ID:	I3799-09	Matrix:	SOIL
Analytical Method:	SW8260	% Moisture:	6.4
Sample Wt/Vol:	5 Units: g	Final Vol:	5000 uL
Soil Aliquot Vol:	uL	Test:	VOCMS Group1
GC Column:	RTX-VMS ID : 0.18	Level :	LOW

File ID/Qc Batch:	Dilution:	Prep Date	Date Analyzed	Prep Batch ID
VF053152.D	1		06/23/17 15:17	VF062317

CAS Number	Parameter	Conc.	Qualifier	MDL	LOD	LOQ / CRQL	Units

U = Not Detected
LOQ = Limit of Quantitation
MDL = Method Detection Limit
LOD = Limit of Detection
E = Value Exceeds Calibration Range
Q = indicates LCS control criteria did not meet requirements
M = MS/MSD acceptance criteria did not meet requirements

J = Estimated Value
B = Analyte Found in Associated Method Blank
N = Presumptive Evidence of a Compound
* = Values outside of QC limits
D = Dilution
() = Laboratory InHouse Limit

CHEMTECH 284 Sheffield Street, Mountainside, NJ 07092 Phone: 908 789 8900 Fax: 908 789 8922

Report of Analysis

Client:	LiRo Engineers, Inc.	Date Collected:	06/20/17
Project:	DDC OEGS - Cross Island Pkwy Storm Extension	Date Received:	06/20/17
Client Sample ID:	SB-06-COMP	SDG No.:	I3799
Lab Sample ID:	I3799-10	Matrix:	SOIL
Analytical Method:	8015B DRO	% Moisture:	9.7 Decanted:
Sample Wt/Vol:	30.02 Units: g	Final Vol:	1 mL
Soil Aliquot Vol:	uL	Test:	Diesel Range Organics
Extraction Type:		Injection Volume	
GPC Factor :	PH :		

File ID/Qc Batch:	Dilution:	Prep Date	Date Analyzed	Prep Batch ID
FD015470.D	1	06/21/17 08:56	06/21/17 23:01	PB99998

CAS Number	Parameter	Conc.	Qualifier	MDL	LOD	LOQ / CRQL	Units(Dry Weight)
TARGETS							
DRO	DRO	4759		922	922	1840	ug/kg
SURROGATES							
16416-32-3	Tetracosane-d50	13.2		37 - 130		66%	SPK: 20

Comments:

U = Not Detected
LOQ = Limit of Quantitation
MDL = Method Detection Limit
LOD = Limit of Detection
E = Value Exceeds Calibration Range
P = Indicates >25% difference for detected concentrations between the two GC columns
Q = indicates LCS control criteria did not meet requirements
M = MS/MSD acceptance criteria did not meet requirements

J = Estimated Value
B = Analyte Found in Associated Method Blank
N = Presumptive Evidence of a Compound
* = Values outside of QC limits
D = Dilution
S = Indicates estimated value where valid five-point calibration was not performed prior to analyte detection in sample.
() = Laboratory InHouse Limit

CHEMTECH 284 Sheffield Street, Mountainside, NJ 07092 Phone: 908 789 8900 Fax: 908 789 8922

Report of Analysis

Client:	LiRo Engineers, Inc.	Date Collected:	06/20/17
Project:	DDC OEGS - Cross Island Pkwy Storm Extension	Date Received:	06/20/17
Client Sample ID:	SB-06-COMP	SDG No.:	I3799
Lab Sample ID:	I3799-10	Matrix:	SOIL
Analytical Method:	8015B GRO	% Moisture:	9.7 Decanted:
Sample Wt/Vol:	4.97 Units: g	Final Vol:	5 mL
Soil Aliquot Vol:	uL	Test:	Gasoline Range Organics
Extraction Type:		Injection Volume :	
GPC Factor :	PH :		

File ID/Qc Batch:	Dilution:	Date Analyzed	Prep Batch ID
FB009688.D	1	06/24/17 18:16	FB062417

CAS Number	Parameter	Conc.	Qualifier	MDL	LOD	LOQ / CRQL	Units(Dry Weight)
TARGETS							
GRO	GRO	25	U	13	25	50	ug/kg
SURROGATES							
98-08-8	Alpha,Alpha,Alpha-Trifluoroto	15.1		50 - 150		75%	SPK: 20

Comments:

U = Not Detected
LOQ = Limit of Quantitation
MDL = Method Detection Limit
LOD = Limit of Detection
E = Value Exceeds Calibration Range
P = Indicates >25% difference for detected concentrations between the two GC columns
Q = indicates LCS control criteria did not meet requirements
M = MS/MSD acceptance criteria did not meet requirements

J = Estimated Value
B = Analyte Found in Associated Method Blank
N = Presumptive Evidence of a Compound
* = Values outside of QC limits
D = Dilution
S = Indicates estimated value where valid five-point calibration was not performed prior to analyte detection in sample.
() = Laboratory InHouse Limit

CHEMTECH 284 Sheffield Street, Mountainside, NJ 07092 Phone: 908 789 8900 Fax: 908 789 8922

Report of Analysis

Client:	LiRo Engineers, Inc.	Date Collected:	06/20/17 08:45
Project:	DDC OEGS - Cross Island Pkwy Storm Extension	Date Received:	06/20/17
Client Sample ID:	SB-06-COMP	SDG No.:	I3799
Lab Sample ID:	I3799-10	Matrix:	SOIL
		% Solid:	90.3

Parameter	Conc.	Qua.	DF	MDL	LOD	LOQ / CRQL	Units	Prep Date	Date Ana.	Ana Met.
Paint Filter	1	U	1	1	1	1	ml/100gm		06/21/17 12:22	9095A

Comments:

U = Not Detected
LOQ = Limit of Quantitation
MDL = Method Detection Limit
LOD = Limit of Detection
D = Dilution
Q = indicates LCS control criteria did not meet requirements
H = Sample Analysis Out Of Hold Time

J = Estimated Value
B = Analyte Found in Associated Method Blank
* = indicates the duplicate analysis is not within control limits.
E = Indicates the reported value is estimated because of the presence of interference.
OR = Over Range
N =Spiked sample recovery not within control limits

CHEMTECH 284 Sheffield Street, Mountainside, NJ 07092 Phone: 908 789 8900 Fax: 908 789 8922

Report of Analysis

Client:	LiRo Engineers, Inc.	Date Collected:	06/20/17
Project:	DDC OEGS - Cross Island Pkwy Storm Extension	Date Received:	06/20/17
Client Sample ID:	SB-07-12.5-13.0	SDG No.:	I3799
Lab Sample ID:	I3799-11	Matrix:	SOIL
Level (low/med):	low	% Solid:	97.8

Cas	Parameter	Conc.	Qua.	DF	MDL	LOD	LOQ / CRQL	Units(Dry Weight)	Prep Date	Date Ana.	Ana Met.
7429-90-5	Aluminum	2210		1	0.731	1.09	4.35	mg/Kg	06/21/17 09:47	06/22/17 13:22	SW6010
7440-36-0	Antimony	0.544	UN	1	0.487	0.544	2.18	mg/Kg	06/21/17 09:47	06/22/17 13:22	SW6010
7440-38-2	Arsenic	0.936		1	0.218	0.218	0.87	mg/Kg	06/21/17 09:47	06/22/17 13:22	SW6010
7440-39-3	Barium	10.8	N	1	0.348	1.09	4.35	mg/Kg	06/21/17 09:47	06/22/17 13:22	SW6010
7440-41-7	Beryllium	0.109	J	1	0.052	0.065	0.261	mg/Kg	06/21/17 09:47	06/22/17 13:22	SW6010
7440-43-9	Cadmium	0.065	U	1	0.052	0.065	0.261	mg/Kg	06/21/17 09:47	06/22/17 13:22	SW6010
7440-70-2	Calcium	196		1	0.931	21.8	87	mg/Kg	06/21/17 09:47	06/22/17 13:22	SW6010
7440-47-3	Chromium	6.89		1	0.109	0.109	0.435	mg/Kg	06/21/17 09:47	06/22/17 13:22	SW6010
7440-48-4	Cobalt	2.51		1	0.326	0.326	1.31	mg/Kg	06/21/17 09:47	06/22/17 13:22	SW6010
7440-50-8	Copper	7.77		1	0.218	0.218	0.87	mg/Kg	06/21/17 09:47	06/22/17 13:22	SW6010
7439-89-6	Iron	8650		1	1.09	1.09	4.35	mg/Kg	06/21/17 09:47	06/22/17 13:22	SW6010
7439-92-1	Lead	3.44		1	0.104	0.218	0.522	mg/Kg	06/21/17 09:47	06/22/17 13:22	SW6010
7439-95-4	Magnesium	666		1	3.99	21.8	87	mg/Kg	06/21/17 09:47	06/22/17 13:22	SW6010
7439-96-5	Manganese	136		1	0.165	0.218	0.87	mg/Kg	06/21/17 09:47	06/22/17 13:22	SW6010
7439-97-6	Mercury	0.007	U	1	0.007	0.007	0.013	mg/Kg	06/20/17 18:43	06/21/17 19:10	SW7471A
7440-02-0	Nickel	14.8		1	0.4	0.435	1.74	mg/Kg	06/21/17 09:47	06/22/17 13:22	SW6010
7440-09-7	Potassium	218		1	3.05	21.8	87	mg/Kg	06/21/17 09:47	06/22/17 13:22	SW6010
7782-49-2	Selenium	2.87		1	0.218	0.218	0.87	mg/Kg	06/21/17 09:47	06/22/17 13:22	SW6010
7440-22-4	Silver	0.568		1	0.109	0.109	0.435	mg/Kg	06/21/17 09:47	06/22/17 13:22	SW6010
7440-23-5	Sodium	30.7	J	1	2.19	21.8	87	mg/Kg	06/21/17 09:47	06/22/17 13:22	SW6010
7440-28-0	Thallium	0.24	J	1	0.235	0.435	1.74	mg/Kg	06/21/17 09:47	06/22/17 13:22	SW6010
7440-62-2	Vanadium	5.85		1	0.435	0.435	1.74	mg/Kg	06/21/17 09:47	06/22/17 13:22	SW6010
7440-66-6	Zinc	8.65	N	1	0.435	0.435	1.74	mg/Kg	06/21/17 09:47	06/22/17 13:22	SW6010

Color Before:	Brown	Clarity Before:		Texture:	Medium
Color After:	Yellow	Clarity After:		Artifacts:	No
Comments:	METALS-TAL				

U = Not Detected
LOQ = Limit of Quantitation
MDL = Method Detection Limit
LOD = Limit of Detection
D = Dilution
Q = indicates LCS control criteria did not meet requirements

J = Estimated Value
B = Analyte Found in Associated Method Blank
* = indicates the duplicate analysis is not within control limits.
E = Indicates the reported value is estimated because of the presence of interference.
OR = Over Range
N =Spiked sample recovery not within control limits

CHEMTECH 284 Sheffield Street, Mountainside, NJ 07092 Phone: 908 789 8900 Fax: 908 789 8922

Report of Analysis

Client:	LiRo Engineers, Inc.	Date Collected:	06/20/17
Project:	DDC OEGS - Cross Island Pkwy Storm Extension	Date Received:	06/20/17
Client Sample ID:	SB-07-12.5-13.0	SDG No.:	I3799
Lab Sample ID:	I3799-11	Matrix:	SOIL
Analytical Method:	SW8082A	% Moisture:	2.2 Decanted:
Sample Wt/Vol:	30.05 Units: g	Final Vol:	10000 uL
Soil Aliquot Vol:	uL	Test:	PCB
Extraction Type:		Injection Volume	
GPC Factor :	1.0 PH :		

File ID/Qc Batch:	Dilution:	Prep Date	Date Analyzed	Prep Batch ID
PO035496.D	1	06/21/17 08:13	06/22/17 20:25	PB99995

CAS Number	Parameter	Conc.	Qualifier	MDL	LOD	LOQ / CRQL	Units(Dry Weight)
TARGETS							
12674-11-2	Aroclor-1016	3.4	U	3.4	3.4	17.4	ug/kg
11104-28-2	Aroclor-1221	3.4	U	3.4	3.4	17.4	ug/kg
11141-16-5	Aroclor-1232	3.4	U	3.4	3.4	17.4	ug/kg
53469-21-9	Aroclor-1242	3.4	U	3.4	3.4	17.4	ug/kg
12672-29-6	Aroclor-1248	3.4	U	3.4	3.4	17.4	ug/kg
11097-69-1	Aroclor-1254	3.4	U	1.5	3.4	17.4	ug/kg
37324-23-5	Aroclor-1262	3.4	U	3.4	3.4	17.4	ug/kg
11100-14-4	Aroclor-1268	3.4	U	3.4	3.4	17.4	ug/kg
11096-82-5	Aroclor-1260	3.4	U	3.4	3.4	17.4	ug/kg
SURROGATES							
877-09-8	Tetrachloro-m-xylene	24.4		10 - 166		122%	SPK: 20
2051-24-3	Decachlorobiphenyl	21		60 - 125		105%	SPK: 20

Comments:

U = Not Detected
LOQ = Limit of Quantitation
MDL = Method Detection Limit
LOD = Limit of Detection
E = Value Exceeds Calibration Range
P = Indicates >25% difference for detected concentrations between the two GC columns
Q = indicates LCS control criteria did not meet requirements
M = MS/MSD acceptance criteria did not meet requirements

J = Estimated Value
B = Analyte Found in Associated Method Blank
N = Presumptive Evidence of a Compound
* = Values outside of QC limits
D = Dilution
S = Indicates estimated value where valid five-point calibration was not performed prior to analyte detection in sample.
() = Laboratory InHouse Limit

CHEMTECH 284 Sheffield Street, Mountainside, NJ 07092 Phone: 908 789 8900 Fax: 908 789 8922

Report of Analysis

Client:	LiRo Engineers, Inc.	Date Collected:	06/20/17
Project:	DDC OEGS - Cross Island Pkwy Storm Extension	Date Received:	06/20/17
Client Sample ID:	SB-07-12.5-13.0	SDG No.:	I3799
Lab Sample ID:	I3799-11	Matrix:	SOIL
Analytical Method:	SW8081	% Moisture:	2.2 Decanted:
Sample Wt/Vol:	30.05 Units: g	Final Vol:	10000 uL
Soil Aliquot Vol:	uL	Test:	PESTICIDE Group1
Extraction Type:		Injection Volume :	
GPC Factor :	1.0 PH :		

File ID/Qc Batch:	Dilution:	Prep Date	Date Analyzed	Prep Batch ID
PL026301.D	1	06/21/17 08:16	06/21/17 17:50	PB99996

CAS Number	Parameter	Conc.	Qualifier	MDL	LOD	LOQ / CRQL	Units(Dry Weight)
TARGETS							
319-84-6	alpha-BHC	0.337	U	0.133	0.337	1.7	ug/kg
319-85-7	beta-BHC	0.337	U	0.184	0.337	1.7	ug/kg
319-86-8	delta-BHC	0.337	U	0.102	0.337	1.7	ug/kg
58-89-9	gamma-BHC (Lindane)	0.337	U	0.153	0.337	1.7	ug/kg
76-44-8	Heptachlor	0.337	U	0.143	0.337	1.7	ug/kg
309-00-2	Aldrin	0.337	U	0.102	0.337	1.7	ug/kg
1024-57-3	Heptachlor epoxide	0.337	U	0.163	0.337	1.7	ug/kg
959-98-8	Endosulfan I	0.337	U	0.153	0.337	1.7	ug/kg
60-57-1	Dieldrin	0.337	U	0.133	0.337	1.7	ug/kg
72-55-9	4,4-DDE	0.337	U	0.204	0.337	1.7	ug/kg
72-20-8	Endrin	0.337	U	0.184	0.337	1.7	ug/kg
33213-65-9	Endosulfan II	0.337	U	0.143	0.337	1.7	ug/kg
72-54-8	4,4-DDD	0.337	U	0.174	0.337	1.7	ug/kg
1031-07-8	Endosulfan Sulfate	0.337	U	0.153	0.337	1.7	ug/kg
50-29-3	4,4-DDT	0.337	U	0.143	0.337	1.7	ug/kg
72-43-5	Methoxychlor	0.337	U	0.174	0.337	1.7	ug/kg
53494-70-5	Endrin ketone	0.337	U	0.133	0.337	1.7	ug/kg
7421-93-4	Endrin aldehyde	0.337	U	0.153	0.337	1.7	ug/kg
5103-71-9	alpha-Chlordane	0.337	U	0.143	0.337	1.7	ug/kg
5103-74-2	gamma-Chlordane	0.337	U	0.133	0.337	1.7	ug/kg
8001-35-2	Toxaphene	3.4	U	3.4	3.4	17.4	ug/kg
SURROGATES							
2051-24-3	Decachlorobiphenyl	24.2		10 - 169		121%	SPK: 20
877-09-8	Tetrachloro-m-xylene	21.8		31 - 151		109%	SPK: 20

CHEMTECH 284 Sheffield Street, Mountainside, NJ 07092 Phone: 908 789 8900 Fax: 908 789 8922

Report of Analysis

Client:	LiRo Engineers, Inc.	Date Collected:	06/20/17
Project:	DDC OEGS - Cross Island Pkwy Storm Extension	Date Received:	06/20/17
Client Sample ID:	SB-07-12.5-13.0	SDG No.:	I3799
Lab Sample ID:	I3799-11	Matrix:	SOIL
Analytical Method:	SW8081	% Moisture:	2.2 Decanted:
Sample Wt/Vol:	30.05 Units: g	Final Vol:	10000 uL
Soil Aliquot Vol:	uL	Test:	PESTICIDE Group1
Extraction Type:		Injection Volume :	
GPC Factor :	1.0 PH :		

File ID/Qc Batch:	Dilution:	Prep Date	Date Analyzed	Prep Batch ID
PL026301.D	1	06/21/17 08:16	06/21/17 17:50	PB99996

CAS Number	Parameter	Conc.	Qualifier	MDL	LOD	LOQ / CRQL	Units

Comments:

U = Not Detected
LOQ = Limit of Quantitation
MDL = Method Detection Limit
LOD = Limit of Detection
= Value Exceeds Calibration Range
P = Indicates >25% difference for detected concentrations between the two GC columns
Q = indicates LCS control criteria did not meet requirements
M = MS/MSD acceptance criteria did not meet requirements

J = Estimated Value
B = Analyte Found in Associated Method Blank
N = Presumptive Evidence of a Compound
* = Values outside of QC limits
D = Dilution
S = Indicates estimated value where valid five-point calibration was not performed prior to analyte detection in sample.
() = Laboratory InHouse Limit

CHEMTECH 284 Sheffield Street, Mountainside, NJ 07092 Phone: 908 789 8900 Fax: 908 789 8922

Report of Analysis

Client:	LiRo Engineers, Inc.	Date Collected:	06/20/17
Project:	DDC OEGS - Cross Island Pkwy Storm Extension	Date Received:	06/20/17
Client Sample ID:	SB-07-12.5-13.0	SDG No.:	I3799
Lab Sample ID:	I3799-11	Matrix:	SOIL
Analytical Method:	SW8270	% Moisture:	2.2
Sample Wt/Vol:	30.08 Units: g	Final Vol:	1000 uL
Soil Aliquot Vol:	uL	Test:	SVOCMS Group1
Extraction Type :	Decanted : N	Level :	LOW
Injection Volume :	GPC Factor : 1.0	GPC Cleanup :	N PH :

File ID/Qc Batch:	Dilution:	Prep Date	Date Analyzed	Prep Batch ID
BG027594.D	1	06/21/17 08:55	06/22/17 13:38	PB99997

CAS Number	Parameter	Conc.	Qualifier	MDL	LOD	LOQ / CRQL	Units(Dry Weight)
TARGETS							
100-52-7	Benzaldehyde	34	U	17.7	34	340	ug/Kg
108-95-2	Phenol	34	U	7.9	34	340	ug/Kg
111-44-4	bis(2-Chloroethyl)ether	34	U	16.3	34	340	ug/Kg
95-57-8	2-Chlorophenol	34	U	17.9	34	340	ug/Kg
95-48-7	2-Methylphenol	34	U	18.5	34	340	ug/Kg
108-60-1	2,2-oxybis(1-Chloropropane)	34	U	14.1	34	340	ug/Kg
98-86-2	Acetophenone	34	U	10.4	34	340	ug/Kg
65794-96-9	3+4-Methylphenols	34	U	17.6	34	340	ug/Kg
621-64-7	n-Nitroso-di-n-propylamine	34	U	17.1	34	340	ug/Kg
67-72-1	Hexachloroethane	34	U	15.2	34	340	ug/Kg
98-95-3	Nitrobenzene	34	U	12.8	34	340	ug/Kg
78-59-1	Isophorone	34	U	11.2	34	340	ug/Kg
88-75-5	2-Nitrophenol	34	U	16.4	34	340	ug/Kg
105-67-9	2,4-Dimethylphenol	34	U	19.3	34	340	ug/Kg
111-91-1	bis(2-Chloroethoxy)methane	34	U	19.6	34	340	ug/Kg
120-83-2	2,4-Dichlorophenol	34	U	13	34	340	ug/Kg
91-20-3	Naphthalene	34	U	11.7	34	340	ug/Kg
106-47-8	4-Chloroaniline	34	U	24	34	340	ug/Kg
87-68-3	Hexachlorobutadiene	34	U	12.3	34	340	ug/Kg
105-60-2	Caprolactam	68	U	15.8	68	340	ug/Kg
59-50-7	4-Chloro-3-methylphenol	34	U	15.1	34	340	ug/Kg
91-57-6	2-Methylnaphthalene	34	U	8.6	34	340	ug/Kg
77-47-4	Hexachlorocyclopentadiene	34	U	8.3	34	340	ug/Kg
88-06-2	2,4,6-Trichlorophenol	34	U	10.4	34	340	ug/Kg
95-95-4	2,4,5-Trichlorophenol	34	U	23.9	34	340	ug/Kg
92-52-4	1,1-Biphenyl	34	U	12.8	34	340	ug/Kg
91-58-7	2-Chloronaphthalene	34	U	7.8	34	340	ug/Kg
88-74-4	2-Nitroaniline	34	U	15.1	34	340	ug/Kg
131-11-3	Dimethylphthalate	240	J	9.2	34	340	ug/Kg
208-96-8	Acenaphthylene	34	U	8.6	34	340	ug/Kg
606-20-2	2,6-Dinitrotoluene	34	U	13.9	34	340	ug/Kg

CHEMTECH 284 Sheffield Street, Mountainside, NJ 07092 Phone: 908 789 8900 Fax: 908 789 8922

Report of Analysis

Client:	LiRo Engineers, Inc.	Date Collected:	06/20/17
Project:	DDC OEGS - Cross Island Pkwy Storm Extension	Date Received:	06/20/17
Client Sample ID:	SB-07-12.5-13.0	SDG No.:	I3799
Lab Sample ID:	I3799-11	Matrix:	SOIL
Analytical Method:	SW8270	% Moisture:	2.2
Sample Wt/Vol:	30.08 Units: g	Final Vol:	1000 uL
Soil Aliquot Vol:	uL	Test:	SVOCMS Group1
Extraction Type :	Decanted : N	Level :	LOW
Injection Volume :	GPC Factor : 1.0	GPC Cleanup :	N PH :

File ID/Qc Batch:	Dilution:	Prep Date	Date Analyzed	Prep Batch ID
BG027594.D	1	06/21/17 08:55	06/22/17 13:38	PB99997

CAS Number	Parameter	Conc.	Qualifier	MDL	LOD	LOQ / CRQL	Units(Dry Weight)
99-09-2	3-Nitroaniline	68	U	21.8	68	340	ug/Kg
83-32-9	Acenaphthene	34	U	9.6	34	340	ug/Kg
51-28-5	2,4-Dinitrophenol	270	U	34.6	270	340	ug/Kg
100-02-7	4-Nitrophenol	170	U	63.1	170	340	ug/Kg
132-64-9	Dibenzofuran	34	U	13.3	34	340	ug/Kg
121-14-2	2,4-Dinitrotoluene	34	U	10.2	34	340	ug/Kg
84-66-2	Diethylphthalate	34	U	5.3	34	340	ug/Kg
7005-72-3	4-Chlorophenyl-phenylether	34	U	18.5	34	340	ug/Kg
86-73-7	Fluorene	34	U	12.8	34	340	ug/Kg
100-01-6	4-Nitroaniline	68	U	44.3	68	340	ug/Kg
534-52-1	4,6-Dinitro-2-methylphenol	170	U	19.5	170	340	ug/Kg
86-30-6	n-Nitrosodiphenylamine	34	U	8.2	34	340	ug/Kg
101-55-3	4-Bromophenyl-phenylether	34	U	6.6	34	340	ug/Kg
118-74-1	Hexachlorobenzene	34	U	13.9	34	340	ug/Kg
1912-24-9	Atrazine	34	U	17.9	34	340	ug/Kg
87-86-5	Pentachlorophenol	34	U	23.3	34	340	ug/Kg
85-01-8	Phenanthrene	34	U	9.2	34	340	ug/Kg
120-12-7	Anthracene	34	U	6.9	34	340	ug/Kg
86-74-8	Carbazole	34	U	7.4	34	340	ug/Kg
84-74-2	Di-n-butylphthalate	34	U	26.7	34	340	ug/Kg
206-44-0	Fluoranthene	34	U	6.8	34	340	ug/Kg
129-00-0	Pyrene	34	U	8.2	34	340	ug/Kg
85-68-7	Butylbenzylphthalate	34	U	16.3	34	340	ug/Kg
91-94-1	3,3-Dichlorobenzidine	34	U	21.8	34	340	ug/Kg
56-55-3	Benzo(a)anthracene	34	U	16.2	34	340	ug/Kg
218-01-9	Chrysene	34	U	15.4	34	340	ug/Kg
117-81-7	Bis(2-ethylhexyl)phthalate	34	U	12	34	340	ug/Kg
117-84-0	Di-n-octyl phthalate	34	U	3.9	34	340	ug/Kg
205-99-2	Benzo(b)fluoranthene	34	U	11.1	34	340	ug/Kg
207-08-9	Benzo(k)fluoranthene	34	U	16	34	340	ug/Kg
50-32-8	Benzo(a)pyrene	34	U	7.3	34	340	ug/Kg
193-39-5	Indeno(1,2,3-cd)pyrene	34	U	11.3	34	340	ug/Kg
53-70-3	Dibenzo(a,h)anthracene	34	U	9.8	34	340	ug/Kg

CHEMTECH 284 Sheffield Street, Mountainside, NJ 07092 Phone: 908 789 8900 Fax: 908 789 8922

Report of Analysis

Client:	LiRo Engineers, Inc.	Date Collected:	06/20/17
Project:	DDC OEGS - Cross Island Pkwy Storm Extension	Date Received:	06/20/17
Client Sample ID:	SB-07-12.5-13.0	SDG No.:	I3799
Lab Sample ID:	I3799-11	Matrix:	SOIL
Analytical Method:	SW8270	% Moisture:	2.2
Sample Wt/Vol:	30.08 Units: g	Final Vol:	1000 uL
Soil Aliquot Vol:	uL	Test:	SVOCMS Group1
Extraction Type :	Decanted : N	Level :	LOW
Injection Volume :	GPC Factor : 1.0	GPC Cleanup :	N PH :

File ID/Qc Batch:	Dilution:	Prep Date	Date Analyzed	Prep Batch ID
BG027594.D	1	06/21/17 08:55	06/22/17 13:38	PB99997

CAS Number	Parameter	Conc.	Qualifier	MDL	LOD	LOQ / CRQL	Units(Dry Weight)
191-24-2	Benzo(g,h,i)perylene	34	U	13.8	34	340	ug/Kg
95-94-3	1,2,4,5-Tetrachlorobenzene	34	U	13.4	34	340	ug/Kg
123-91-1	1,4-Dioxane	68	U	13.4	68	340	ug/Kg
58-90-2	2,3,4,6-Tetrachlorophenol	34	U	13.4	34	340	ug/Kg
SURROGATES							
367-12-4	2-Fluorophenol	120		28 - 127		83%	SPK: 150
13127-88-3	Phenol-d6	110		34 - 127		77%	SPK: 150
4165-60-0	Nitrobenzene-d5	77.6		31 - 132		78%	SPK: 100
321-60-8	2-Fluorobiphenyl	78.4		39 - 123		78%	SPK: 100
118-79-6	2,4,6-Tribromophenol	140		30 - 133		93%	SPK: 150
1718-51-0	Terphenyl-d14	85.8		37 - 115		86%	SPK: 100
INTERNAL STANDARDS							
3855-82-1	1,4-Dichlorobenzene-d4	19151	8.5				
1146-65-2	Naphthalene-d8	88469	11.32				
15067-26-2	Acenaphthene-d10	56862	15.08				
1517-22-2	Phenanthrene-d10	164008	17.83				
1719-03-5	Chrysene-d12	179793	22.2				
1520-96-3	Perylene-d12	170708	25.84				

U = Not Detected
LOQ = Limit of Quantitation
MDL = Method Detection Limit
LOD = Limit of Detection
E = Value Exceeds Calibration Range
Q = indicates LCS control criteria did not meet requirements
M = MS/MSD acceptance criteria did not meet requirements

J = Estimated Value
B = Analyte Found in Associated Method Blank
N = Presumptive Evidence of a Compound
* = Values outside of QC limits
D = Dilution
() = Laboratory InHouse Limit

CHEMTECH 284 Sheffield Street, Mountainside, NJ 07092 Phone: 908 789 8900 Fax: 908 789 8922

Report of Analysis

Client:	LiRo Engineers, Inc.	Date Collected:	06/20/17
Project:	DDC OEGS - Cross Island Pkwy Storm Extension	Date Received:	06/20/17
Client Sample ID:	SB-07-12.5-13.0	SDG No.:	I3799
Lab Sample ID:	I3799-11	Matrix:	SOIL
Analytical Method:	SW8260	% Moisture:	2.2
Sample Wt/Vol:	5.01 Units: g	Final Vol:	5000 uL
Soil Aliquot Vol:	uL	Test:	VOCMS Group1
GC Column:	RTX-VMS ID : 0.18	Level :	LOW

File ID/Qc Batch:	Dilution:	Prep Date	Date Analyzed	Prep Batch ID
VF053140.D	1		06/22/17 22:32	VF062217

CAS Number	Parameter	Conc.	Qualifier	MDL	LOD	LOQ / CRQL	Units(Dry Weight)
TARGETS							
75-71-8	Dichlorodifluoromethane	0.51	U	0.51	0.51	5.1	ug/Kg
74-87-3	Chloromethane	0.51	U	0.51	0.51	5.1	ug/Kg
75-01-4	Vinyl Chloride	0.51	U	0.51	0.51	5.1	ug/Kg
74-83-9	Bromomethane	1	U	1	1	5.1	ug/Kg
75-00-3	Chloroethane	0.51	U	0.51	0.51	5.1	ug/Kg
75-69-4	Trichlorofluoromethane	0.51	U	0.51	0.51	5.1	ug/Kg
76-13-1	1,1,2-Trichlorotrifluoroethane	0.51	U	0.51	0.51	5.1	ug/Kg
75-65-0	Tert butyl alcohol	25.5	U	7.6	25.5	25.5	ug/Kg
75-35-4	1,1-Dichloroethene	0.51	U	0.51	0.51	5.1	ug/Kg
67-64-1	Acetone	2.6	U	2.6	2.6	25.5	ug/Kg
75-15-0	Carbon Disulfide	0.51	U	0.51	0.51	5.1	ug/Kg
1634-04-4	Methyl tert-butyl Ether	0.51	U	0.51	0.51	5.1	ug/Kg
79-20-9	Methyl Acetate	1	U	1	1	5.1	ug/Kg
75-09-2	Methylene Chloride	16		0.51	0.51	5.1	ug/Kg
156-60-5	trans-1,2-Dichloroethene	0.51	U	0.51	0.51	5.1	ug/Kg
75-34-3	1,1-Dichloroethane	0.51	U	0.51	0.51	5.1	ug/Kg
110-82-7	Cyclohexane	0.51	U	0.51	0.51	5.1	ug/Kg
78-93-3	2-Butanone	7.7	U	3.2	7.7	25.5	ug/Kg
56-23-5	Carbon Tetrachloride	0.51	U	0.51	0.51	5.1	ug/Kg
156-59-2	cis-1,2-Dichloroethene	0.51	U	0.51	0.51	5.1	ug/Kg
74-97-5	Bromochloromethane	0.51	U	0.51	0.51	5.1	ug/Kg
67-66-3	Chloroform	0.51	U	0.51	0.51	5.1	ug/Kg
71-55-6	1,1,1-Trichloroethane	0.51	U	0.51	0.51	5.1	ug/Kg
108-87-2	Methylcyclohexane	0.51	U	0.51	0.51	5.1	ug/Kg
71-43-2	Benzene	0.51	U	0.39	0.51	5.1	ug/Kg
107-06-2	1,2-Dichloroethane	0.51	U	0.51	0.51	5.1	ug/Kg
79-01-6	Trichloroethene	0.51	U	0.51	0.51	5.1	ug/Kg
78-87-5	1,2-Dichloropropane	0.51	U	0.27	0.51	5.1	ug/Kg
5-27-4	Bromodichloromethane	0.51	U	0.51	0.51	5.1	ug/Kg
108-10-1	4-Methyl-2-Pentanone	2.6	U	2.6	2.6	25.5	ug/Kg
108-88-3	Toluene	0.51	U	0.51	0.51	5.1	ug/Kg
10061-02-6	t-1,3-Dichloropropene	0.51	U	0.51	0.51	5.1	ug/Kg

CHEMTECH 284 Sheffield Street, Mountainside, NJ 07092 Phone: 908 789 8900 Fax: 908 789 8922

Report of Analysis

Client:	LiRo Engineers, Inc.	Date Collected:	06/20/17
Project:	DDC OEGS - Cross Island Pkwy Storm Extension	Date Received:	06/20/17
Client Sample ID:	SB-07-12.5-13.0	SDG No.:	I3799
Lab Sample ID:	I3799-11	Matrix:	SOIL
Analytical Method:	SW8260	% Moisture:	2.2
Sample Wt/Vol:	5.01 Units: g	Final Vol:	5000 uL
Soil Aliquot Vol:	uL	Test:	VOCMS Group1
GC Column:	RTX-VMS ID : 0.18	Level :	LOW

File ID/Qc Batch:	Dilution:	Prep Date	Date Analyzed	Prep Batch ID
VF053140.D	1		06/22/17 22:32	VF062217

CAS Number	Parameter	Conc.	Qualifier	MDL	LOD	LOQ / CRQL	Units(Dry Weight)
10061-01-5	cis-1,3-Dichloropropene	0.51	U	0.51	0.51	5.1	ug/Kg
79-00-5	1,1,2-Trichloroethane	1	U	0.92	1	5.1	ug/Kg
591-78-6	2-Hexanone	2.6	U	2.6	2.6	25.5	ug/Kg
124-48-1	Dibromochloromethane	0.51	U	0.51	0.51	5.1	ug/Kg
106-93-4	1,2-Dibromoethane	0.51	U	0.51	0.51	5.1	ug/Kg
127-18-4	Tetrachloroethene	0.51	U	0.51	0.51	5.1	ug/Kg
108-90-7	Chlorobenzene	0.51	U	0.51	0.51	5.1	ug/Kg
100-41-4	Ethyl Benzene	0.51	U	0.51	0.51	5.1	ug/Kg
179601-23-1	m/p-Xylenes	1	U	0.73	1	10.2	ug/Kg
95-47-6	o-Xylene	0.51	U	0.51	0.51	5.1	ug/Kg
100-42-5	Styrene	0.51	U	0.46	0.51	5.1	ug/Kg
75-25-2	Bromoform	1.5	U	0.76	1.5	5.1	ug/Kg
98-82-8	Isopropylbenzene	0.51	U	0.49	0.51	5.1	ug/Kg
79-34-5	1,1,2,2-Tetrachloroethane	0.51	U	0.47	0.51	5.1	ug/Kg
541-73-1	1,3-Dichlorobenzene	0.51	U	0.38	0.51	5.1	ug/Kg
106-46-7	1,4-Dichlorobenzene	0.51	U	0.42	0.51	5.1	ug/Kg
95-50-1	1,2-Dichlorobenzene	0.51	U	0.51	0.51	5.1	ug/Kg
96-12-8	1,2-Dibromo-3-Chloropropane	5.1	U	0.89	5.1	5.1	ug/Kg
120-82-1	1,2,4-Trichlorobenzene	0.51	U	0.51	0.51	5.1	ug/Kg
87-61-6	1,2,3-Trichlorobenzene	1	U	0.51	1	5.1	ug/Kg
SURROGATES							
17060-07-0	1,2-Dichloroethane-d4	41		56 - 120		82%	SPK: 50
1868-53-7	Dibromofluoromethane	47.7		57 - 135		95%	SPK: 50
2037-26-5	Toluene-d8	44.5		67 - 123		89%	SPK: 50
460-00-4	4-Bromofluorobenzene	42.3		33 - 141		85%	SPK: 50
INTERNAL STANDARDS							
363-72-4	Pentafluorobenzene	367069	4.82				
540-36-3	1,4-Difluorobenzene	689581	5.55				
3114-55-4	Chlorobenzene-d5	589297	9.71				
3855-82-1	1,4-Dichlorobenzene-d4	255890	12.5				

CHEMTECH 284 Sheffield Street, Mountainside, NJ 07092 Phone: 908 789 8900 Fax: 908 789 8922

Report of Analysis

Client:	LiRo Engineers, Inc.	Date Collected:	06/20/17
Project:	DDC OEGS - Cross Island Pkwy Storm Extension	Date Received:	06/20/17
Client Sample ID:	SB-07-12.5-13.0	SDG No.:	I3799
Lab Sample ID:	I3799-11	Matrix:	SOIL
Analytical Method:	SW8260	% Moisture:	2.2
Sample Wt/Vol:	5.01 Units: g	Final Vol:	5000 uL
Soil Aliquot Vol:	uL	Test:	VOCMS Group1
GC Column:	RTX-VMS ID : 0.18	Level :	LOW

File ID/Qc Batch:	Dilution:	Prep Date	Date Analyzed	Prep Batch ID
VF053140.D	1		06/22/17 22:32	VF062217

CAS Number	Parameter	Conc.	Qualifier	MDL	LOD	LOQ / CRQL	Units

U = Not Detected
LOQ = Limit of Quantitation
MDL = Method Detection Limit
LOD = Limit of Detection
E = Value Exceeds Calibration Range
Q = indicates LCS control criteria did not meet requirements
M = MS/MSD acceptance criteria did not meet requirements

J = Estimated Value
B = Analyte Found in Associated Method Blank
N = Presumptive Evidence of a Compound
* = Values outside of QC limits
D = Dilution
() = Laboratory InHouse Limit

CHEMTECH 284 Sheffield Street, Mountainside, NJ 07092 Phone: 908 789 8900 Fax: 908 789 8922

Report of Analysis

Client:	LiRo Engineers, Inc.	Date Collected:	06/20/17
Project:	DDC OEGS - Cross Island Pkwy Storm Extension	Date Received:	06/20/17
Client Sample ID:	SB-07-COMP	SDG No.:	I3799
Lab Sample ID:	I3799-12	Matrix:	SOIL
Analytical Method:	8015B DRO	% Moisture:	3.9 Decanted:
Sample Wt/Vol:	30.1 Units: g	Final Vol:	1 mL
Soil Aliquot Vol:	uL	Test:	Diesel Range Organics
Extraction Type:		Injection Volume	
GPC Factor :	PH :		

File ID/Qc Batch:	Dilution:	Prep Date	Date Analyzed	Prep Batch ID
FD015465.D	1	06/21/17 08:56	06/21/17 19:59	PB99998

CAS Number	Parameter	Conc.	Qualifier	MDL	LOD	LOQ / CRQL	Units(Dry Weight)
TARGETS							
DRO	DRO	3768		864	865	1730	ug/kg
SURROGATES							
16416-32-3	Tetracosane-d50	12.9		37 - 130		64%	SPK: 20

Comments:

U = Not Detected
LOQ = Limit of Quantitation
MDL = Method Detection Limit
LOD = Limit of Detection
E = Value Exceeds Calibration Range
P = Indicates >25% difference for detected concentrations between the two GC columns
Q = indicates LCS control criteria did not meet requirements
M = MS/MSD acceptance criteria did not meet requirements

J = Estimated Value
B = Analyte Found in Associated Method Blank
N = Presumptive Evidence of a Compound
* = Values outside of QC limits
D = Dilution
S = Indicates estimated value where valid five-point calibration was not performed prior to analyte detection in sample.
() = Laboratory InHouse Limit

CHEMTECH 284 Sheffield Street, Mountainside, NJ 07092 Phone: 908 789 8900 Fax: 908 789 8922

Report of Analysis

Client:	LiRo Engineers, Inc.	Date Collected:	06/20/17
Project:	DDC OEGS - Cross Island Pkwy Storm Extension	Date Received:	06/20/17
Client Sample ID:	SB-07-COMP	SDG No.:	I3799
Lab Sample ID:	I3799-12	Matrix:	SOIL
Analytical Method:	8015B GRO	% Moisture:	3.9 Decanted:
Sample Wt/Vol:	5.03 Units: g	Final Vol:	5 mL
Soil Aliquot Vol:	uL	Test:	Gasoline Range Organics
Extraction Type:		Injection Volume :	
GPC Factor :	PH :		

File ID/Qc Batch:	Dilution:	Date Analyzed	Prep Batch ID
FB009689.D	1	06/24/17 18:47	FB062417

CAS Number	Parameter	Conc.	Qualifier	MDL	LOD	LOQ / CRQL	Units(Dry Weight)
TARGETS							
GRO	GRO	23.5	U	12	23.5	47	ug/kg
SURROGATES							
98-08-8	Alpha,Alpha,Alpha-Trifluoroto	17.4		50 - 150		87%	SPK: 20

Comments:

U = Not Detected
LOQ = Limit of Quantitation
MDL = Method Detection Limit
LOD = Limit of Detection
E = Value Exceeds Calibration Range
P = Indicates >25% difference for detected concentrations between the two GC columns
Q = indicates LCS control criteria did not meet requirements
M = MS/MSD acceptance criteria did not meet requirements

J = Estimated Value
B = Analyte Found in Associated Method Blank
N = Presumptive Evidence of a Compound
* = Values outside of QC limits
D = Dilution
S = Indicates estimated value where valid five-point calibration was not performed prior to analyte detection in sample.
() = Laboratory InHouse Limit

CHEMTECH 284 Sheffield Street, Mountainside, NJ 07092 Phone: 908 789 8900 Fax: 908 789 8922

Report of Analysis

Client:	LiRo Engineers, Inc.	Date Collected:	06/20/17 09:45
Project:	DDC OEGS - Cross Island Pkwy Storm Extension	Date Received:	06/20/17
Client Sample ID:	SB-07-COMP	SDG No.:	I3799
Lab Sample ID:	I3799-12	Matrix:	SOIL
		% Solid:	96.1

Parameter	Conc.	Qua.	DF	MDL	LOD	LOQ / CRQL	Units	Prep Date	Date Ana.	Ana Met.
Paint Filter	1	U	1	1	1	1	ml/100gm		06/21/17 12:30	9095A

Comments:

U = Not Detected
LOQ = Limit of Quantitation
MDL = Method Detection Limit
LOD = Limit of Detection
D = Dilution
Q = indicates LCS control criteria did not meet requirements
H = Sample Analysis Out Of Hold Time

J = Estimated Value
B = Analyte Found in Associated Method Blank
* = indicates the duplicate analysis is not within control limits.
E = Indicates the reported value is estimated because of the presence of interference.
OR = Over Range
N =Spiked sample recovery not within control limits

CHEMTECH 284 Sheffield Street, Mountainside, NJ 07092 Phone: 908 789 8900 Fax: 908 789 8922

Report of Analysis

Client:	LiRo Engineers, Inc.	Date Collected:	06/20/17
Project:	DDC OEGS - Cross Island Pkwy Storm Extension	Date Received:	06/20/17
Client Sample ID:	SB-08-11.5-12.0	SDG No.:	I3799
Lab Sample ID:	I3799-13	Matrix:	SOIL
Level (low/med):	low	% Solid:	95.6

Cas	Parameter	Conc.	Qua.	DF	MDL	LOD	LOQ / CRQL	Units(Dry Weight)	Prep Date	Date Ana.	Ana Met.
7429-90-5	Aluminum	2980		1	0.738	1.1	4.4	mg/Kg	06/21/17 09:47	06/22/17 13:26	SW6010
7440-36-0	Antimony	0.549	UN	1	0.492	0.549	2.2	mg/Kg	06/21/17 09:47	06/22/17 13:26	SW6010
7440-38-2	Arsenic	1.06		1	0.22	0.22	0.879	mg/Kg	06/21/17 09:47	06/22/17 13:26	SW6010
7440-39-3	Barium	16.8	N	1	0.352	1.1	4.4	mg/Kg	06/21/17 09:47	06/22/17 13:26	SW6010
7440-41-7	Beryllium	0.116	J	1	0.053	0.066	0.264	mg/Kg	06/21/17 09:47	06/22/17 13:26	SW6010
7440-43-9	Cadmium	0.066	U	1	0.053	0.066	0.264	mg/Kg	06/21/17 09:47	06/22/17 13:26	SW6010
7440-70-2	Calcium	252		1	0.941	22	87.9	mg/Kg	06/21/17 09:47	06/22/17 13:26	SW6010
7440-47-3	Chromium	6.87		1	0.11	0.11	0.44	mg/Kg	06/21/17 09:47	06/22/17 13:26	SW6010
7440-48-4	Cobalt	3.59		1	0.33	0.33	1.32	mg/Kg	06/21/17 09:47	06/22/17 13:26	SW6010
7440-50-8	Copper	6.1		1	0.22	0.22	0.879	mg/Kg	06/21/17 09:47	06/22/17 13:26	SW6010
7439-89-6	Iron	8840		1	1.1	1.1	4.4	mg/Kg	06/21/17 09:47	06/22/17 13:26	SW6010
7439-92-1	Lead	3		1	0.105	0.22	0.527	mg/Kg	06/21/17 09:47	06/22/17 13:26	SW6010
7439-95-4	Magnesium	778		1	4.03	22	87.9	mg/Kg	06/21/17 09:47	06/22/17 13:26	SW6010
7439-96-5	Manganese	138		1	0.167	0.22	0.879	mg/Kg	06/21/17 09:47	06/22/17 13:26	SW6010
7439-97-6	Mercury	0.006	U	1	0.006	0.006	0.013	mg/Kg	06/20/17 18:43	06/21/17 19:13	SW7471A
7440-02-0	Nickel	18.7		1	0.404	0.44	1.76	mg/Kg	06/21/17 09:47	06/22/17 13:26	SW6010
7440-09-7	Potassium	238		1	3.08	22	87.9	mg/Kg	06/21/17 09:47	06/22/17 13:26	SW6010
7782-49-2	Selenium	2.85		1	0.22	0.22	0.879	mg/Kg	06/21/17 09:47	06/22/17 13:26	SW6010
7440-22-4	Silver	0.555		1	0.11	0.11	0.44	mg/Kg	06/21/17 09:47	06/22/17 13:26	SW6010
7440-23-5	Sodium	59.2	J	1	2.22	22	87.9	mg/Kg	06/21/17 09:47	06/22/17 13:26	SW6010
7440-28-0	Thallium	0.271	J	1	0.237	0.44	1.76	mg/Kg	06/21/17 09:47	06/22/17 13:26	SW6010
7440-62-2	Vanadium	6.17		1	0.44	0.44	1.76	mg/Kg	06/21/17 09:47	06/22/17 13:26	SW6010
7440-66-6	Zinc	10.8	N	1	0.44	0.44	1.76	mg/Kg	06/21/17 09:47	06/22/17 13:26	SW6010

Color Before:	Brown	Clarity Before:		Texture:	Medium
Color After:	Yellow	Clarity After:		Artifacts:	No
Comments:	METALS-TAL				

U = Not Detected
LOQ = Limit of Quantitation
MDL = Method Detection Limit
LOD = Limit of Detection
D = Dilution
Q = indicates LCS control criteria did not meet requirements

J = Estimated Value
B = Analyte Found in Associated Method Blank
* = indicates the duplicate analysis is not within control limits.
E = Indicates the reported value is estimated because of the presence of interference.
OR = Over Range
N =Spiked sample recovery not within control limits

CHEMTECH 284 Sheffield Street, Mountainside, NJ 07092 Phone: 908 789 8900 Fax: 908 789 8922

Report of Analysis

Client:	LiRo Engineers, Inc.	Date Collected:	06/20/17
Project:	DDC OEGS - Cross Island Pkwy Storm Extension	Date Received:	06/20/17
Client Sample ID:	SB-08-11.5-12.0	SDG No.:	I3799
Lab Sample ID:	I3799-13	Matrix:	SOIL
Analytical Method:	SW8082A	% Moisture:	4.4 Decanted:
Sample Wt/Vol:	30.11 Units: g	Final Vol:	10000 uL
Soil Aliquot Vol:	uL	Test:	PCB
Extraction Type:		Injection Volume	
GPC Factor :	1.0 PH :		

File ID/Qc Batch:	Dilution:	Prep Date	Date Analyzed	Prep Batch ID
PO035497.D	1	06/21/17 08:13	06/22/17 20:40	PB99995

CAS Number	Parameter	Conc.	Qualifier	MDL	LOD	LOQ / CRQL	Units(Dry Weight)
TARGETS							
12674-11-2	Aroclor-1016	3.5	U	3.5	3.5	17.7	ug/kg
11104-28-2	Aroclor-1221	3.5	U	3.5	3.5	17.7	ug/kg
11141-16-5	Aroclor-1232	3.5	U	3.5	3.5	17.7	ug/kg
53469-21-9	Aroclor-1242	3.5	U	3.5	3.5	17.7	ug/kg
12672-29-6	Aroclor-1248	3.5	U	3.5	3.5	17.7	ug/kg
11097-69-1	Aroclor-1254	3.5	U	1.6	3.5	17.7	ug/kg
37324-23-5	Aroclor-1262	3.5	U	3.5	3.5	17.7	ug/kg
11100-14-4	Aroclor-1268	3.5	U	3.5	3.5	17.7	ug/kg
11096-82-5	Aroclor-1260	3.5	U	3.5	3.5	17.7	ug/kg
SURROGATES							
877-09-8	Tetrachloro-m-xylene	22.2		10 - 166		111%	SPK: 20
2051-24-3	Decachlorobiphenyl	19.6		60 - 125		98%	SPK: 20

Comments:

U = Not Detected
LOQ = Limit of Quantitation
MDL = Method Detection Limit
LOD = Limit of Detection
E = Value Exceeds Calibration Range
P = Indicates >25% difference for detected concentrations between the two GC columns
Q = indicates LCS control criteria did not meet requirements
M = MS/MSD acceptance criteria did not meet requirements

J = Estimated Value
B = Analyte Found in Associated Method Blank
N = Presumptive Evidence of a Compound
* = Values outside of QC limits
D = Dilution
S = Indicates estimated value where valid five-point calibration was not performed prior to analyte detection in sample.
() = Laboratory InHouse Limit

CHEMTECH 284 Sheffield Street, Mountainside, NJ 07092 Phone: 908 789 8900 Fax: 908 789 8922

Report of Analysis

Client:	LiRo Engineers, Inc.	Date Collected:	06/20/17
Project:	DDC OEGS - Cross Island Pkwy Storm Extension	Date Received:	06/20/17
Client Sample ID:	SB-08-11.5-12.0	SDG No.:	I3799
Lab Sample ID:	I3799-13	Matrix:	SOIL
Analytical Method:	SW8081	% Moisture:	4.4 Decanted:
Sample Wt/Vol:	30.11 Units: g	Final Vol:	10000 uL
Soil Aliquot Vol:	uL	Test:	PESTICIDE Group1
Extraction Type:		Injection Volume :	
GPC Factor :	1.0 PH :		

File ID/Qc Batch:	Dilution:	Prep Date	Date Analyzed	Prep Batch ID
PL026304.D	1	06/21/17 08:16	06/21/17 18:32	PB99996

CAS Number	Parameter	Conc.	Qualifier	MDL	LOD	LOQ / CRQL	Units(Dry Weight)
TARGETS							
319-84-6	alpha-BHC	0.344	U	0.136	0.344	1.8	ug/kg
319-85-7	beta-BHC	0.344	U	0.188	0.344	1.8	ug/kg
319-86-8	delta-BHC	0.344	U	0.104	0.344	1.8	ug/kg
58-89-9	gamma-BHC (Lindane)	0.344	U	0.156	0.344	1.8	ug/kg
76-44-8	Heptachlor	0.344	U	0.146	0.344	1.8	ug/kg
309-00-2	Aldrin	0.344	U	0.104	0.344	1.8	ug/kg
1024-57-3	Heptachlor epoxide	0.344	U	0.167	0.344	1.8	ug/kg
959-98-8	Endosulfan I	0.344	U	0.156	0.344	1.8	ug/kg
60-57-1	Dieldrin	0.344	U	0.136	0.344	1.8	ug/kg
72-55-9	4,4-DDE	0.344	U	0.208	0.344	1.8	ug/kg
72-20-8	Endrin	0.344	U	0.188	0.344	1.8	ug/kg
33213-65-9	Endosulfan II	0.344	U	0.146	0.344	1.8	ug/kg
72-54-8	4,4-DDD	0.344	U	0.177	0.344	1.8	ug/kg
1031-07-8	Endosulfan Sulfate	0.344	U	0.156	0.344	1.8	ug/kg
50-29-3	4,4-DDT	0.344	U	0.146	0.344	1.8	ug/kg
72-43-5	Methoxychlor	0.344	U	0.177	0.344	1.8	ug/kg
53494-70-5	Endrin ketone	0.344	U	0.136	0.344	1.8	ug/kg
7421-93-4	Endrin aldehyde	0.344	U	0.156	0.344	1.8	ug/kg
5103-71-9	alpha-Chlordane	0.344	U	0.146	0.344	1.8	ug/kg
5103-74-2	gamma-Chlordane	0.344	U	0.136	0.344	1.8	ug/kg
8001-35-2	Toxaphene	3.5	U	3.5	3.5	17.7	ug/kg
SURROGATES							
2051-24-3	Decachlorobiphenyl	26.2		10 - 169		131%	SPK: 20
877-09-8	Tetrachloro-m-xylene	22.6		31 - 151		113%	SPK: 20

CHEMTECH 284 Sheffield Street, Mountainside, NJ 07092 Phone: 908 789 8900 Fax: 908 789 8922

Report of Analysis

Client:	LiRo Engineers, Inc.	Date Collected:	06/20/17
Project:	DDC OEGS - Cross Island Pkwy Storm Extension	Date Received:	06/20/17
Client Sample ID:	SB-08-11.5-12.0	SDG No.:	I3799
Lab Sample ID:	I3799-13	Matrix:	SOIL
Analytical Method:	SW8081	% Moisture:	4.4 Decanted:
Sample Wt/Vol:	30.11 Units: g	Final Vol:	10000 uL
Soil Aliquot Vol:	uL	Test:	PESTICIDE Group1
Extraction Type:		Injection Volume :	
GPC Factor :	1.0 PH :		

File ID/Qc Batch:	Dilution:	Prep Date	Date Analyzed	Prep Batch ID
PL026304.D	1	06/21/17 08:16	06/21/17 18:32	PB99996

CAS Number	Parameter	Conc.	Qualifier	MDL	LOD	LOQ / CRQL	Units

Comments:

U = Not Detected
LOQ = Limit of Quantitation
MDL = Method Detection Limit
LOD = Limit of Detection
E = Value Exceeds Calibration Range
P = Indicates >25% difference for detected concentrations between the two GC columns
Q = indicates LCS control criteria did not meet requirements
M = MS/MSD acceptance criteria did not meet requirements

J = Estimated Value
B = Analyte Found in Associated Method Blank
N = Presumptive Evidence of a Compound
* = Values outside of QC limits
D = Dilution
S = Indicates estimated value where valid five-point calibration was not performed prior to analyte detection in sample.
() = Laboratory InHouse Limit

CHEMTECH 284 Sheffield Street, Mountainside, NJ 07092 Phone: 908 789 8900 Fax: 908 789 8922

Report of Analysis

Client:	LiRo Engineers, Inc.	Date Collected:	06/20/17
Project:	DDC OEGS - Cross Island Pkwy Storm Extension	Date Received:	06/20/17
Client Sample ID:	SB-08-11.5-12.0	SDG No.:	I3799
Lab Sample ID:	I3799-13	Matrix:	SOIL
Analytical Method:	SW8270	% Moisture:	4.4
Sample Wt/Vol:	30.12 Units: g	Final Vol:	1000 uL
Soil Aliquot Vol:	uL	Test:	SVOCMS Group1
Extraction Type :	Decanted : N	Level :	LOW
Injection Volume :	GPC Factor : 1.0	GPC Cleanup :	N PH :

File ID/Qc Batch:	Dilution:	Prep Date	Date Analyzed	Prep Batch ID
BG027603.D	1	06/21/17 08:55	06/22/17 19:34	PB99997

CAS Number	Parameter	Conc.	Qualifier	MDL	LOD	LOQ / CRQL	Units(Dry Weight)
TARGETS							
100-52-7	Benzaldehyde	34.7	U	18.1	34.7	340	ug/Kg
108-95-2	Phenol	34.7	U	8	34.7	340	ug/Kg
111-44-4	bis(2-Chloroethyl)ether	34.7	U	16.7	34.7	340	ug/Kg
95-57-8	2-Chlorophenol	34.7	U	18.3	34.7	340	ug/Kg
95-48-7	2-Methylphenol	34.7	U	18.9	34.7	340	ug/Kg
108-60-1	2,2-oxybis(1-Chloropropane)	34.7	U	14.4	34.7	340	ug/Kg
98-86-2	Acetophenone	34.7	U	10.6	34.7	340	ug/Kg
65794-96-9	3+4-Methylphenols	34.7	U	18	34.7	340	ug/Kg
621-64-7	n-Nitroso-di-n-propylamine	34.7	U	17.5	34.7	340	ug/Kg
67-72-1	Hexachloroethane	34.7	U	15.5	34.7	340	ug/Kg
98-95-3	Nitrobenzene	34.7	U	13.1	34.7	340	ug/Kg
78-59-1	Isophorone	34.7	U	11.5	34.7	340	ug/Kg
88-75-5	2-Nitrophenol	34.7	U	16.8	34.7	340	ug/Kg
105-67-9	2,4-Dimethylphenol	34.7	U	19.7	34.7	340	ug/Kg
111-91-1	bis(2-Chloroethoxy)methane	34.7	U	20	34.7	340	ug/Kg
120-83-2	2,4-Dichlorophenol	34.7	U	13.2	34.7	340	ug/Kg
91-20-3	Naphthalene	34.7	U	12	34.7	340	ug/Kg
106-47-8	4-Chloroaniline	34.7	U	24.5	34.7	340	ug/Kg
87-68-3	Hexachlorobutadiene	34.7	U	12.6	34.7	340	ug/Kg
105-60-2	Caprolactam	69.5	U	16.1	69.5	340	ug/Kg
59-50-7	4-Chloro-3-methylphenol	34.7	U	15.4	34.7	340	ug/Kg
91-57-6	2-Methylnaphthalene	34.7	U	8.8	34.7	340	ug/Kg
77-47-4	Hexachlorocyclopentadiene	34.7	U	8.4	34.7	340	ug/Kg
88-06-2	2,4,6-Trichlorophenol	34.7	U	10.6	34.7	340	ug/Kg
95-95-4	2,4,5-Trichlorophenol	34.7	U	24.4	34.7	340	ug/Kg
92-52-4	1,1-Biphenyl	34.7	U	13.1	34.7	340	ug/Kg
91-58-7	2-Chloronaphthalene	34.7	U	7.9	34.7	340	ug/Kg
88-74-4	2-Nitroaniline	34.7	U	15.4	34.7	340	ug/Kg
131-11-3	Dimethylphthalate	270	J	9.4	34.7	340	ug/Kg
208-96-8	Acenaphthylene	34.7	U	8.8	34.7	340	ug/Kg
606-20-2	2,6-Dinitrotoluene	34.7	U	14.2	34.7	340	ug/Kg

CHEMTECH 284 Sheffield Street, Mountainside, NJ 07092 Phone: 908 789 8900 Fax: 908 789 8922

Report of Analysis

Client:	LiRo Engineers, Inc.	Date Collected:	06/20/17
Project:	DDC OEGS - Cross Island Pkwy Storm Extension	Date Received:	06/20/17
Client Sample ID:	SB-08-11.5-12.0	SDG No.:	I3799
Lab Sample ID:	I3799-13	Matrix:	SOIL
Analytical Method:	SW8270	% Moisture:	4.4
Sample Wt/Vol:	30.12 Units: g	Final Vol:	1000 uL
Soil Aliquot Vol:	uL	Test:	SVOCMS Group1
Extraction Type :	Decanted : N	Level :	LOW
Injection Volume :	GPC Factor : 1.0	GPC Cleanup :	N PH :

File ID/Qc Batch:	Dilution:	Prep Date	Date Analyzed	Prep Batch ID
BG027603.D	1	06/21/17 08:55	06/22/17 19:34	PB99997

CAS Number	Parameter	Conc.	Qualifier	MDL	LOD	LOQ / CRQL	Units(Dry Weight)
99-09-2	3-Nitroaniline	69.5	U	22.3	69.5	340	ug/Kg
83-32-9	Acenaphthene	34.7	U	9.8	34.7	340	ug/Kg
51-28-5	2,4-Dinitrophenol	280	U	35.3	280	340	ug/Kg
100-02-7	4-Nitrophenol	170	U	64.5	170	340	ug/Kg
132-64-9	Dibenzofuran	34.7	U	13.5	34.7	340	ug/Kg
121-14-2	2,4-Dinitrotoluene	34.7	U	10.4	34.7	340	ug/Kg
84-66-2	Diethylphthalate	34.7	U	5.4	34.7	340	ug/Kg
7005-72-3	4-Chlorophenyl-phenylether	34.7	U	18.9	34.7	340	ug/Kg
86-73-7	Fluorene	34.7	U	13.1	34.7	340	ug/Kg
100-01-6	4-Nitroaniline	69.5	U	45.2	69.5	340	ug/Kg
534-52-1	4,6-Dinitro-2-methylphenol	170	U	19.9	170	340	ug/Kg
86-30-6	n-Nitrosodiphenylamine	34.7	U	8.3	34.7	340	ug/Kg
101-55-3	4-Bromophenyl-phenylether	34.7	U	6.8	34.7	340	ug/Kg
118-74-1	Hexachlorobenzene	34.7	U	14.2	34.7	340	ug/Kg
1912-24-9	Atrazine	34.7	U	18.3	34.7	340	ug/Kg
87-86-5	Pentachlorophenol	34.7	U	23.8	34.7	340	ug/Kg
85-01-8	Phenanthrene	34.7	U	9.4	34.7	340	ug/Kg
120-12-7	Anthracene	34.7	U	7.1	34.7	340	ug/Kg
86-74-8	Carbazole	34.7	U	7.6	34.7	340	ug/Kg
84-74-2	Di-n-butylphthalate	34.7	U	27.3	34.7	340	ug/Kg
206-44-0	Fluoranthene	34.7	U	7	34.7	340	ug/Kg
129-00-0	Pyrene	34.7	U	8.3	34.7	340	ug/Kg
85-68-7	Butylbenzylphthalate	34.7	U	16.7	34.7	340	ug/Kg
91-94-1	3,3-Dichlorobenzidine	34.7	U	22.3	34.7	340	ug/Kg
56-55-3	Benzo(a)anthracene	34.7	U	16.6	34.7	340	ug/Kg
218-01-9	Chrysene	34.7	U	15.7	34.7	340	ug/Kg
117-81-7	Bis(2-ethylhexyl)phthalate	34.7	U	12.3	34.7	340	ug/Kg
117-84-0	Di-n-octyl phthalate	34.7	U	4	34.7	340	ug/Kg
205-99-2	Benzo(b)fluoranthene	34.7	U	11.4	34.7	340	ug/Kg
207-08-9	Benzo(k)fluoranthene	34.7	U	16.4	34.7	340	ug/Kg
50-32-8	Benzo(a)pyrene	34.7	U	7.5	34.7	340	ug/Kg
193-39-5	Indeno(1,2,3-cd)pyrene	34.7	U	11.6	34.7	340	ug/Kg
53-70-3	Dibenzo(a,h)anthracene	34.7	U	10	34.7	340	ug/Kg

CHEMTECH 284 Sheffield Street, Mountainside, NJ 07092 Phone: 908 789 8900 Fax: 908 789 8922

Report of Analysis

Client:	LiRo Engineers, Inc.	Date Collected:	06/20/17
Project:	DDC OEGS - Cross Island Pkwy Storm Extension	Date Received:	06/20/17
Client Sample ID:	SB-08-11.5-12.0	SDG No.:	I3799
Lab Sample ID:	I3799-13	Matrix:	SOIL
Analytical Method:	SW8270	% Moisture:	4.4
Sample Wt/Vol:	30.12 Units: g	Final Vol:	1000 uL
Soil Aliquot Vol:	uL	Test:	SVOCMS Group1
Extraction Type :	Decanted : N	Level :	LOW
Injection Volume :	GPC Factor : 1.0	GPC Cleanup :	N PH :

File ID/Qc Batch:	Dilution:	Prep Date	Date Analyzed	Prep Batch ID
BG027603.D	1	06/21/17 08:55	06/22/17 19:34	PB99997

CAS Number	Parameter	Conc.	Qualifier	MDL	LOD	LOQ / CRQL	Units(Dry Weight)
191-24-2	Benzo(g,h,i)perylene	34.7	U	14.1	34.7	340	ug/Kg
95-94-3	1,2,4,5-Tetrachlorobenzene	34.7	U	13.6	34.7	340	ug/Kg
123-91-1	1,4-Dioxane	69.5	U	13.6	69.5	340	ug/Kg
58-90-2	2,3,4,6-Tetrachlorophenol	34.7	U	13.6	34.7	340	ug/Kg
SURROGATES							
367-12-4	2-Fluorophenol	110		28 - 127		75%	SPK: 150
13127-88-3	Phenol-d6	100		34 - 127		68%	SPK: 150
4165-60-0	Nitrobenzene-d5	72		31 - 132		72%	SPK: 100
321-60-8	2-Fluorobiphenyl	71.9		39 - 123		72%	SPK: 100
118-79-6	2,4,6-Tribromophenol	130		30 - 133		86%	SPK: 150
1718-51-0	Terphenyl-d14	80.4		37 - 115		80%	SPK: 100
INTERNAL STANDARDS							
3855-82-1	1,4-Dichlorobenzene-d4	17192	8.51				
1146-65-2	Naphthalene-d8	76946	11.32				
15067-26-2	Acenaphthene-d10	50408	15.09				
1517-22-2	Phenanthrene-d10	151077	17.84				
1719-03-5	Chrysene-d12	171396	22.2				
1520-96-3	Perylene-d12	166163	25.84				

U = Not Detected
LOQ = Limit of Quantitation
MDL = Method Detection Limit
LOD = Limit of Detection
E = Value Exceeds Calibration Range
Q = indicates LCS control criteria did not meet requirements
M = MS/MSD acceptance criteria did not meet requirements

J = Estimated Value
B = Analyte Found in Associated Method Blank
N = Presumptive Evidence of a Compound
* = Values outside of QC limits
D = Dilution
() = Laboratory InHouse Limit

CHEMTECH 284 Sheffield Street, Mountainside, NJ 07092 Phone: 908 789 8900 Fax: 908 789 8922

Report of Analysis

Client:	LiRo Engineers, Inc.	Date Collected:	06/20/17
Project:	DDC OEGS - Cross Island Pkwy Storm Extension	Date Received:	06/20/17
Client Sample ID:	SB-08-11.5-12.0	SDG No.:	I3799
Lab Sample ID:	I3799-13	Matrix:	SOIL
Analytical Method:	SW8260	% Moisture:	4.4
Sample Wt/Vol:	5 Units: g	Final Vol:	5000 uL
Soil Aliquot Vol:	uL	Test:	VOCMS Group1
GC Column:	RTX-VMS ID : 0.18	Level :	LOW

File ID/Qc Batch:	Dilution:	Prep Date	Date Analyzed	Prep Batch ID
VF053153.D	1		06/23/17 15:46	VF062317

CAS Number	Parameter	Conc.	Qualifier	MDL	LOD	LOQ / CRQL	Units(Dry Weight)
TARGETS							
75-71-8	Dichlorodifluoromethane	0.52	U	0.52	0.52	5.2	ug/Kg
74-87-3	Chloromethane	0.52	U	0.52	0.52	5.2	ug/Kg
75-01-4	Vinyl Chloride	0.52	U	0.52	0.52	5.2	ug/Kg
74-83-9	Bromomethane	1	U	1	1	5.2	ug/Kg
75-00-3	Chloroethane	0.52	U	0.52	0.52	5.2	ug/Kg
75-69-4	Trichlorofluoromethane	0.52	U	0.52	0.52	5.2	ug/Kg
76-13-1	1,1,2-Trichlorotrifluoroethane	0.52	U	0.52	0.52	5.2	ug/Kg
75-65-0	Tert butyl alcohol	26.2	U	7.8	26.2	26.2	ug/Kg
75-35-4	1,1-Dichloroethene	0.52	U	0.52	0.52	5.2	ug/Kg
67-64-1	Acetone	2.6	U	2.6	2.6	26.2	ug/Kg
75-15-0	Carbon Disulfide	0.52	U	0.52	0.52	5.2	ug/Kg
1634-04-4	Methyl tert-butyl Ether	0.52	U	0.52	0.52	5.2	ug/Kg
79-20-9	Methyl Acetate	1	U	1	1	5.2	ug/Kg
75-09-2	Methylene Chloride	31.1		0.52	0.52	5.2	ug/Kg
156-60-5	trans-1,2-Dichloroethene	0.52	U	0.52	0.52	5.2	ug/Kg
75-34-3	1,1-Dichloroethane	0.52	U	0.52	0.52	5.2	ug/Kg
110-82-7	Cyclohexane	0.52	U	0.52	0.52	5.2	ug/Kg
78-93-3	2-Butanone	7.8	U	3.3	7.8	26.2	ug/Kg
56-23-5	Carbon Tetrachloride	0.52	U	0.52	0.52	5.2	ug/Kg
156-59-2	cis-1,2-Dichloroethene	0.52	U	0.52	0.52	5.2	ug/Kg
74-97-5	Bromochloromethane	0.52	U	0.52	0.52	5.2	ug/Kg
67-66-3	Chloroform	0.52	U	0.52	0.52	5.2	ug/Kg
71-55-6	1,1,1-Trichloroethane	0.52	U	0.52	0.52	5.2	ug/Kg
108-87-2	Methylcyclohexane	0.52	U	0.52	0.52	5.2	ug/Kg
71-43-2	Benzene	0.52	U	0.4	0.52	5.2	ug/Kg
107-06-2	1,2-Dichloroethane	0.52	U	0.52	0.52	5.2	ug/Kg
79-01-6	Trichloroethene	0.52	U	0.52	0.52	5.2	ug/Kg
78-87-5	1,2-Dichloropropane	0.52	U	0.27	0.52	5.2	ug/Kg
75-27-4	Bromodichloromethane	0.52	U	0.52	0.52	5.2	ug/Kg
108-10-1	4-Methyl-2-Pentanone	2.6	U	2.6	2.6	26.2	ug/Kg
108-88-3	Toluene	0.52	U	0.52	0.52	5.2	ug/Kg
10061-02-6	t-1,3-Dichloropropene	0.52	U	0.52	0.52	5.2	ug/Kg

CHEMTECH 284 Sheffield Street, Mountainside, NJ 07092 Phone: 908 789 8900 Fax: 908 789 8922

Report of Analysis

Client:	LiRo Engineers, Inc.	Date Collected:	06/20/17
Project:	DDC OEGS - Cross Island Pkwy Storm Extension	Date Received:	06/20/17
Client Sample ID:	SB-08-11.5-12.0	SDG No.:	I3799
Lab Sample ID:	I3799-13	Matrix:	SOIL
Analytical Method:	SW8260	% Moisture:	4.4
Sample Wt/Vol:	5 Units: g	Final Vol:	5000 uL
Soil Aliquot Vol:	uL	Test:	VOCMS Group1
GC Column:	RTX-VMS ID : 0.18	Level :	LOW

File ID/Qc Batch:	Dilution:	Prep Date	Date Analyzed	Prep Batch ID
VF053153.D	1		06/23/17 15:46	VF062317

CAS Number	Parameter	Conc.	Qualifier	MDL	LOD	LOQ / CRQL	Units(Dry Weight)
10061-01-5	cis-1,3-Dichloropropene	0.52	U	0.52	0.52	5.2	ug/Kg
79-00-5	1,1,2-Trichloroethane	1	U	0.94	1	5.2	ug/Kg
591-78-6	2-Hexanone	2.6	U	2.6	2.6	26.2	ug/Kg
124-48-1	Dibromochloromethane	0.52	U	0.52	0.52	5.2	ug/Kg
106-93-4	1,2-Dibromoethane	0.52	U	0.52	0.52	5.2	ug/Kg
127-18-4	Tetrachloroethene	0.52	U	0.52	0.52	5.2	ug/Kg
108-90-7	Chlorobenzene	0.52	U	0.52	0.52	5.2	ug/Kg
100-41-4	Ethyl Benzene	0.52	U	0.52	0.52	5.2	ug/Kg
179601-23-1	m/p-Xylenes	1	U	0.75	1	10.5	ug/Kg
95-47-6	o-Xylene	0.52	U	0.52	0.52	5.2	ug/Kg
100-42-5	Styrene	0.52	U	0.47	0.52	5.2	ug/Kg
75-25-2	Bromoform	1.6	U	0.77	1.6	5.2	ug/Kg
98-82-8	Isopropylbenzene	0.52	U	0.5	0.52	5.2	ug/Kg
79-34-5	1,1,2,2-Tetrachloroethane	0.52	U	0.48	0.52	5.2	ug/Kg
541-73-1	1,3-Dichlorobenzene	0.52	U	0.39	0.52	5.2	ug/Kg
106-46-7	1,4-Dichlorobenzene	0.52	U	0.43	0.52	5.2	ug/Kg
95-50-1	1,2-Dichlorobenzene	0.52	U	0.52	0.52	5.2	ug/Kg
96-12-8	1,2-Dibromo-3-Chloropropane	5.2	U	0.91	5.2	5.2	ug/Kg
120-82-1	1,2,4-Trichlorobenzene	0.52	U	0.52	0.52	5.2	ug/Kg
87-61-6	1,2,3-Trichlorobenzene	1	U	0.52	1	5.2	ug/Kg
SURROGATES							
17060-07-0	1,2-Dichloroethane-d4	41.6		56 - 120		83%	SPK: 50
1868-53-7	Dibromofluoromethane	44.9		57 - 135		90%	SPK: 50
2037-26-5	Toluene-d8	44.1		67 - 123		88%	SPK: 50
460-00-4	4-Bromofluorobenzene	43.6		33 - 141		87%	SPK: 50
INTERNAL STANDARDS							
363-72-4	Pentafluorobenzene	380451	4.83				
540-36-3	1,4-Difluorobenzene	735126	5.56				
3114-55-4	Chlorobenzene-d5	634127	9.72				
855-82-1	1,4-Dichlorobenzene-d4	280533	12.5				

CHEMTECH 284 Sheffield Street, Mountainside, NJ 07092 Phone: 908 789 8900 Fax: 908 789 8922

Report of Analysis

Client:	LiRo Engineers, Inc.	Date Collected:	06/20/17
Project:	DDC OEGS - Cross Island Pkwy Storm Extension	Date Received:	06/20/17
Client Sample ID:	SB-08-11.5-12.0	SDG No.:	I3799
Lab Sample ID:	I3799-13	Matrix:	SOIL
Analytical Method:	SW8260	% Moisture:	4.4
Sample Wt/Vol:	5 Units: g	Final Vol:	5000 uL
Soil Aliquot Vol:	uL	Test:	VOCMS Group1
GC Column:	RTX-VMS ID : 0.18	Level :	LOW

File ID/Qc Batch:	Dilution:	Prep Date	Date Analyzed	Prep Batch ID
VF053153.D	1		06/23/17 15:46	VF062317

CAS Number	Parameter	Conc.	Qualifier	MDL	LOD	LOQ / CRQL	Units

U = Not Detected
LOQ = Limit of Quantitation
MDL = Method Detection Limit
LOD = Limit of Detection
E = Value Exceeds Calibration Range
Q = indicates LCS control criteria did not meet requirements
M = MS/MSD acceptance criteria did not meet requirements

J = Estimated Value
B = Analyte Found in Associated Method Blank
N = Presumptive Evidence of a Compound
* = Values outside of QC limits
D = Dilution
() = Laboratory InHouse Limit

CHEMTECH 284 Sheffield Street, Mountainside, NJ 07092 Phone: 908 789 8900 Fax: 908 789 8922

Report of Analysis

Client:	LiRo Engineers, Inc.	Date Collected:	06/20/17
Project:	DDC OEGS - Cross Island Pkwy Storm Extension	Date Received:	06/20/17
Client Sample ID:	SB-08-COMP	SDG No.:	I3799
Lab Sample ID:	I3799-14	Matrix:	SOIL
Analytical Method:	8015B DRO	% Moisture:	0 Decanted:
Sample Wt/Vol:	30.04 Units: g	Final Vol:	1 mL
Soil Aliquot Vol:	uL	Test:	Diesel Range Organics
Extraction Type:		Injection Volume	
GPC Factor :	PH :		

File ID/Qc Batch:	Dilution:	Prep Date	Date Analyzed	Prep Batch ID
FD015464.D	1	06/21/17 08:56	06/21/17 19:22	PB99998

CAS Number	Parameter	Conc.	Qualifier	MDL	LOD	LOQ / CRQL	Units(Dry Weight)
TARGETS							
DRO	DRO	3795		832	832	1660	ug/kg
SURROGATES							
16416-32-3	Tetracosane-d50	12.7		37 - 130		63%	SPK: 20

Comments:

U = Not Detected
LOQ = Limit of Quantitation
MDL = Method Detection Limit
LOD = Limit of Detection
= Value Exceeds Calibration Range
P = Indicates >25% difference for detected concentrations between the two GC columns
Q = indicates LCS control criteria did not meet requirements
M = MS/MSD acceptance criteria did not meet requirements

J = Estimated Value
B = Analyte Found in Associated Method Blank
N = Presumptive Evidence of a Compound
* = Values outside of QC limits
D = Dilution
S = Indicates estimated value where valid five-point calibration was not performed prior to analyte detection in sample.
() = Laboratory InHouse Limit

CHEMTECH 284 Sheffield Street, Mountainside, NJ 07092 Phone: 908 789 8900 Fax: 908 789 8922

Report of Analysis

Client:	LiRo Engineers, Inc.	Date Collected:	06/20/17
Project:	DDC OEGS - Cross Island Pkwy Storm Extension	Date Received:	06/20/17
Client Sample ID:	SB-08-COMP	SDG No.:	I3799
Lab Sample ID:	I3799-14	Matrix:	SOIL
Analytical Method:	8015B GRO	% Moisture:	0 Decanted:
Sample Wt/Vol:	5.01 Units: g	Final Vol:	5 mL
Soil Aliquot Vol:	uL	Test:	Gasoline Range Organics
Extraction Type:		Injection Volume :	
GPC Factor :	PH :		

File ID/Qc Batch:	Dilution:	Date Analyzed	Prep Batch ID
FB009690.D	1	06/24/17 19:19	FB062417

CAS Number	Parameter	Conc.	Qualifier	MDL	LOD	LOQ / CRQL	Units(Dry Weight)
TARGETS							
GRO	GRO	22.5	U	12	22.5	45	ug/kg
SURROGATES							
98-08-8	Alpha,Alpha,Alpha-Trifluoroto	15.8		50 - 150		79%	SPK: 20

Comments:

U = Not Detected
LOQ = Limit of Quantitation
MDL = Method Detection Limit
LOD = Limit of Detection
E = Value Exceeds Calibration Range
P = Indicates >25% difference for detected concentrations between the two GC columns
Q = indicates LCS control criteria did not meet requirements
M = MS/MSD acceptance criteria did not meet requirements

J = Estimated Value
B = Analyte Found in Associated Method Blank
N = Presumptive Evidence of a Compound
* = Values outside of QC limits
D = Dilution
S = Indicates estimated value where valid five-point calibration was not performed prior to analyte detection in sample.
() = Laboratory InHouse Limit

CHEMTECH 284 Sheffield Street, Mountainside, NJ 07092 Phone: 908 789 8900 Fax: 908 789 8922

Report of Analysis

Client:	LiRo Engineers, Inc.	Date Collected:	06/20/17 11:00
Project:	DDC OEGS - Cross Island Pkwy Storm Extension	Date Received:	06/20/17
Client Sample ID:	SB-08-COMP	SDG No.:	I3799
Lab Sample ID:	I3799-14	Matrix:	SOIL
		% Solid:	100

Parameter	Conc.	Qua.	DF	MDL	LOD	LOQ / CRQL	Units	Prep Date	Date Ana.	Ana Met.
Paint Filter	1	U	1	1	1	1	ml/100gm		06/21/17 12:40	9095A

Comments:

U = Not Detected
LOQ = Limit of Quantitation
MDL = Method Detection Limit
LOD = Limit of Detection
D = Dilution
Q = indicates LCS control criteria did not meet requirements
H = Sample Analysis Out Of Hold Time

J = Estimated Value
B = Analyte Found in Associated Method Blank
* = indicates the duplicate analysis is not within control limits.
E = Indicates the reported value is estimated because of the presence of interference.
OR = Over Range
N =Spiked sample recovery not within control limits

CHEMTECH 284 Sheffield Street, Mountainside, NJ 07092 Phone: 908 789 8900 Fax: 908 789 8922

Report of Analysis

Client:	LiRo Engineers, Inc.	Date Collected:	06/20/17
Project:	DDC OEGS - Cross Island Pkwy Storm Extension	Date Received:	06/20/17
Client Sample ID:	TRIP-BLANK-2	SDG No.:	I3799
Lab Sample ID:	I3799-15	Matrix:	Water
Analytical Method:	SW8260	% Moisture:	100
Sample Wt/Vol:	5 Units: mL	Final Vol:	5000 uL
Soil Aliquot Vol:	uL	Test:	VOCMS Group1
GC Column:	RXI-624 ID : 0.25	Level :	LOW

File ID/Qc Batch:	Dilution:	Prep Date	Date Analyzed	Prep Batch ID
VN041737.D	1		06/24/17 15:01	VN062517

CAS Number	Parameter	Conc.	Qualifier	MDL	LOD	LOQ / CRQL	Units
TARGETS							
75-71-8	Dichlorodifluoromethane	0.5	U	0.2	0.5	5	ug/L
74-87-3	Chloromethane	0.5	U	0.2	0.5	5	ug/L
75-01-4	Vinyl Chloride	0.5	U	0.34	0.5	5	ug/L
74-83-9	Bromomethane	0.5	U	0.2	0.5	5	ug/L
75-00-3	Chloroethane	0.5	U	0.2	0.5	5	ug/L
75-69-4	Trichlorofluoromethane	0.5	U	0.35	0.5	5	ug/L
76-13-1	1,1,2-Trichlorotrifluoroethane	0.5	U	0.45	0.5	5	ug/L
75-65-0	Tert butyl alcohol	2.5	U	0.5	2.5	25	ug/L
75-35-4	1,1-Dichloroethene	0.5	U	0.47	0.5	5	ug/L
67-64-1	Acetone	2.5	U	0.5	2.5	25	ug/L
75-15-0	Carbon Disulfide	0.5	U	0.2	0.5	5	ug/L
1634-04-4	Methyl tert-butyl Ether	0.5	U	0.35	0.5	5	ug/L
79-20-9	Methyl Acetate	2	U	0.2	2	5	ug/L
75-09-2	Methylene Chloride	0.5	U	0.41	0.5	5	ug/L
156-60-5	trans-1,2-Dichloroethene	0.5	U	0.41	0.5	5	ug/L
75-34-3	1,1-Dichloroethane	0.5	U	0.36	0.5	5	ug/L
110-82-7	Cyclohexane	0.5	U	0.2	0.5	5	ug/L
78-93-3	2-Butanone	2.5	U	1.3	2.5	25	ug/L
56-23-5	Carbon Tetrachloride	0.5	U	0.2	0.5	5	ug/L
156-59-2	cis-1,2-Dichloroethene	0.5	U	0.35	0.5	5	ug/L
74-97-5	Bromochloromethane	0.5	U	0.2	0.5	5	ug/L
67-66-3	Chloroform	0.5	U	0.34	0.5	5	ug/L
71-55-6	1,1,1-Trichloroethane	0.75	U	0.4	0.75	5	ug/L
108-87-2	Methylcyclohexane	0.5	U	0.2	0.5	5	ug/L
71-43-2	Benzene	0.5	U	0.32	0.5	5	ug/L
107-06-2	1,2-Dichloroethane	0.75	U	0.48	0.75	5	ug/L
79-01-6	Trichloroethene	0.5	U	0.28	0.5	5	ug/L
78-87-5	1,2-Dichloropropane	0.5	U	0.46	0.5	5	ug/L
75-27-4	Bromodichloromethane	0.5	U	0.36	0.5	5	ug/L
108-10-1	4-Methyl-2-Pentanone	2.5	U	2.1	2.5	25	ug/L
108-88-3	Toluene	0.5	U	0.37	0.5	5	ug/L
10061-02-6	t-1,3-Dichloropropene	0.5	U	0.29	0.5	5	ug/L

CHEMTECH 284 Sheffield Street, Mountainside, NJ 07092 Phone: 908 789 8900 Fax: 908 789 8922

Report of Analysis

Client:	LiRo Engineers, Inc.	Date Collected:	06/20/17
Project:	DDC OEGS - Cross Island Pkwy Storm Extension	Date Received:	06/20/17
Client Sample ID:	TRIP-BLANK-2	SDG No.:	I3799
Lab Sample ID:	I3799-15	Matrix:	Water
Analytical Method:	SW8260	% Moisture:	100
Sample Wt/Vol:	5 Units: mL	Final Vol:	5000 uL
Soil Aliquot Vol:	uL	Test:	VOCMS Group1
GC Column:	RXI-624 ID : 0.25	Level :	LOW

File ID/Qc Batch:	Dilution:	Prep Date	Date Analyzed	Prep Batch ID
VN041737.D	1		06/24/17 15:01	VN062517

CAS Number	Parameter	Conc.	Qualifier	MDL	LOD	LOQ / CRQL	Units
10061-01-5	cis-1,3-Dichloropropene	0.5	U	0.31	0.5	5	ug/L
79-00-5	1,1,2-Trichloroethane	0.5	U	0.38	0.5	5	ug/L
591-78-6	2-Hexanone	3.8	U	1.9	3.8	25	ug/L
124-48-1	Dibromochloromethane	0.5	U	0.2	0.5	5	ug/L
106-93-4	1,2-Dibromoethane	0.5	U	0.41	0.5	5	ug/L
127-18-4	Tetrachloroethene	0.5	U	0.27	0.5	5	ug/L
108-90-7	Chlorobenzene	0.5	U	0.49	0.5	5	ug/L
100-41-4	Ethyl Benzene	0.5	U	0.2	0.5	5	ug/L
179601-23-1	m/p-Xylenes	1	U	0.95	1	10	ug/L
95-47-6	o-Xylene	0.5	U	0.43	0.5	5	ug/L
100-42-5	Styrene	0.5	U	0.36	0.5	5	ug/L
75-25-2	Bromoform	0.5	U	0.47	0.5	5	ug/L
98-82-8	Isopropylbenzene	0.5	U	0.45	0.5	5	ug/L
79-34-5	1,1,2,2-Tetrachloroethane	0.5	U	0.31	0.5	5	ug/L
541-73-1	1,3-Dichlorobenzene	0.5	U	0.43	0.5	5	ug/L
106-46-7	1,4-Dichlorobenzene	0.5	U	0.32	0.5	5	ug/L
95-50-1	1,2-Dichlorobenzene	0.5	U	0.45	0.5	5	ug/L
96-12-8	1,2-Dibromo-3-Chloropropane	2	U	0.46	2	5	ug/L
120-82-1	1,2,4-Trichlorobenzene	0.5	U	0.2	0.5	5	ug/L
87-61-6	1,2,3-Trichlorobenzene	0.5	U	0.2	0.5	5	ug/L
SURROGATES							
17060-07-0	1,2-Dichloroethane-d4	44.9		61 - 141		90%	SPK: 50
1868-53-7	Dibromofluoromethane	47.9		69 - 133		96%	SPK: 50
2037-26-5	Toluene-d8	49.1		65 - 126		98%	SPK: 50
460-00-4	4-Bromofluorobenzene	43.4		58 - 135		87%	SPK: 50
INTERNAL STANDARDS							
363-72-4	Pentafluorobenzene	479283	7.99				
540-36-3	1,4-Difluorobenzene	774570	8.88				
3114-55-4	Chlorobenzene-d5	675266	11.68				
855-82-1	1,4-Dichlorobenzene-d4	246450	13.61				

CHEMTECH 284 Sheffield Street, Mountainside, NJ 07092 Phone: 908 789 8900 Fax: 908 789 8922

Report of Analysis

Client:	LiRo Engineers, Inc.	Date Collected:	06/20/17
Project:	DDC OEGS - Cross Island Pkwy Storm Extension	Date Received:	06/20/17
Client Sample ID:	TRIP-BLANK-2	SDG No.:	I3799
Lab Sample ID:	I3799-15	Matrix:	Water
Analytical Method:	SW8260	% Moisture:	100
Sample Wt/Vol:	5 Units: mL	Final Vol:	5000 uL
Soil Aliquot Vol:	uL	Test:	VOCMS Group1
GC Column:	RXI-624 ID : 0.25	Level :	LOW

File ID/Qc Batch:	Dilution:	Prep Date	Date Analyzed	Prep Batch ID
VN041737.D	1		06/24/17 15:01	VN062517

CAS Number	Parameter	Conc.	Qualifier	MDL	LOD	LOQ / CRQL	Units

U = Not Detected
LOQ = Limit of Quantitation
MDL = Method Detection Limit
LOD = Limit of Detection
E = Value Exceeds Calibration Range
Q = indicates LCS control criteria did not meet requirements
M = MS/MSD acceptance criteria did not meet requirements

J = Estimated Value
B = Analyte Found in Associated Method Blank
N = Presumptive Evidence of a Compound
* = Values outside of QC limits
D = Dilution
() = Laboratory InHouse Limit

CHEMTECH 284 Sheffield Street, Mountainside, NJ 07092 Phone: 908 789 8900 Fax: 908 789 8922

Report of Analysis

Client:	LiRo Engineers, Inc.	Date Collected:	06/19/17 10:45
Project:	DDC OEGS - Cross Island Pkwy Storm Extension	Date Received:	06/20/17
Client Sample ID:	SB-02-COMP	SDG No.:	I3799
Lab Sample ID:	I3799-16	Matrix:	SOIL
		% Solid:	100

Parameter	Conc.	Qua.	DF	MDL	LOD	LOQ / CRQL	Units	Prep Date	Date Ana.	Ana Met.
Corrosivity	8.16		1	0	0	0	pH		06/20/17 15:36	9045C
Ignitability	NO		1	0	0	0	oC		06/21/17 09:55	1030
Reactive Cyanide	0.025	U	1	0.025	0.025	0.05	mg/Kg	06/22/17 08:57	06/22/17 10:54	9012B
Reactive Sulfide	10	U	1	10	10	10	mg/Kg	06/21/17 09:30	06/21/17 12:15	9034

Comments:

U = Not Detected
LOQ = Limit of Quantitation
MDL = Method Detection Limit
LOD = Limit of Detection
D = Dilution
Q = indicates LCS control criteria did not meet requirements
H = Sample Analysis Out Of Hold Time

J = Estimated Value
B = Analyte Found in Associated Method Blank
* = indicates the duplicate analysis is not within control limits.
E = Indicates the reported value is estimated because of the presence of interference.
OR = Over Range
N =Spiked sample recovery not within control limits

CHEMTECH 284 Sheffield Street, Mountainside, NJ 07092 Phone: 908 789 8900 Fax: 908 789 8922

Report of Analysis

Client:	LiRo Engineers, Inc.	Date Collected:	06/19/17
Project:	DDC OEGS - Cross Island Pkwy Storm Extension	Date Received:	06/20/17
Client Sample ID:	SB-02-COMP	SDG No.:	I3799
Lab Sample ID:	I3799-16	Matrix:	TCLP
Level (low/med):	low	% Solid:	0

Cas	Parameter	Conc.	Qua.	DF	MDL	LOD	LOQ / CRQL	Units	Prep Date	Date Ana.	Ana Met.
7440-38-2	Arsenic	25	U	1	25	25.0	100	ug/L	06/21/17 11:31	06/21/17 18:03	SW6010
7440-39-3	Barium	952		1	40	125	500	ug/L	06/21/17 11:31	06/21/17 18:03	SW6010
7440-43-9	Cadmium	7.5	U	1	5	7.5	30	ug/L	06/21/17 11:31	06/21/17 18:03	SW6010
7440-47-3	Chromium	12.7	J	1	11	12.5	50	ug/L	06/21/17 11:31	06/21/17 18:03	SW6010
7439-92-1	Lead	15	U	1	15	15.0	60	ug/L	06/21/17 11:31	06/21/17 18:03	SW6010
7439-97-6	Mercury	1	U	1	1	1.0	2	ug/L	06/21/17 12:51	06/22/17 11:59	SW7470A
7782-49-2	Selenium	50	U	1	48	50.0	100	ug/L	06/21/17 11:31	06/21/17 18:03	SW6010
7440-22-4	Silver	12.5	U	1	12.5	12.5	50	ug/L	06/21/17 11:31	06/21/17 18:03	SW6010

Color Before:	Colorless	Clarity Before:		Texture:	Clear
Color After:	Colorless	Clarity After:		Artifacts:	Clear
Comments:	TCLP METALS				

U = Not Detected
LOQ = Limit of Quantitation
MDL = Method Detection Limit
LOD = Limit of Detection
D = Dilution
Q = indicates LCS control criteria did not meet requirements

J = Estimated Value
B = Analyte Found in Associated Method Blank
* = indicates the duplicate analysis is not within control limits.
E = Indicates the reported value is estimated because of the presence of interference.
OR = Over Range
N =Spiked sample recovery not within control limits

CHEMTECH 284 Sheffield Street, Mountainside, NJ 07092 Phone: 908 789 8900 Fax: 908 789 8922

Report of Analysis

Client:	LiRo Engineers, Inc.	Date Collected:	06/19/17 11:20
Project:	DDC OEGS - Cross Island Pkwy Storm Extension	Date Received:	06/20/17
Client Sample ID:	SB-03-COMP	SDG No.:	I3799
Lab Sample ID:	I3799-17	Matrix:	SOIL
		% Solid:	100

Parameter	Conc.	Qua.	DF	MDL	LOD	LOQ / CRQL	Units	Prep Date	Date Ana.	Ana Met.
Corrosivity	7.24		1	0	0	0	pH		06/20/17 15:39	9045C
Ignitability	NO		1	0	0	0	oC		06/21/17 10:04	1030
Reactive Cyanide	0.025	U	1	0.025	0.025	0.05	mg/Kg	06/22/17 08:57	06/22/17 10:54	9012B
Reactive Sulfide	26.9		1	10	10	10	mg/Kg	06/21/17 09:30	06/21/17 12:18	9034

Comments:

U = Not Detected
LOQ = Limit of Quantitation
MDL = Method Detection Limit
LOD = Limit of Detection
D = Dilution
Q = indicates LCS control criteria did not meet requirements
H = Sample Analysis Out Of Hold Time

J = Estimated Value
B = Analyte Found in Associated Method Blank
* = indicates the duplicate analysis is not within control limits.
E = Indicates the reported value is estimated because of the presence of interference.
OR = Over Range
N =Spiked sample recovery not within control limits

CHEMTECH 284 Sheffield Street, Mountainside, NJ 07092 Phone: 908 789 8900 Fax: 908 789 8922

Report of Analysis

Client:	LiRo Engineers, Inc.	Date Collected:	06/19/17
Project:	DDC OEGS - Cross Island Pkwy Storm Extension	Date Received:	06/20/17
Client Sample ID:	SB-03-COMP	SDG No.:	I3799
Lab Sample ID:	I3799-17	Matrix:	TCLP
Level (low/med):	low	% Solid:	0

Cas	Parameter	Conc.	Qua.	DF	MDL	LOD	LOQ / CRQL	Units	Prep Date	Date Ana.	Ana Met.
7440-38-2	Arsenic	25	U	1	25	25.0	100	ug/L	06/21/17 11:31	06/21/17 18:07	SW6010
7440-39-3	Barium	1440		1	40	125	500	ug/L	06/21/17 11:31	06/21/17 18:07	SW6010
7440-43-9	Cadmium	7.5	U	1	5	7.5	30	ug/L	06/21/17 11:31	06/21/17 18:07	SW6010
7440-47-3	Chromium	12.5	U	1	11	12.5	50	ug/L	06/21/17 11:31	06/21/17 18:07	SW6010
7439-92-1	Lead	15	U	1	15	15.0	60	ug/L	06/21/17 11:31	06/21/17 18:07	SW6010
7439-97-6	Mercury	1	U	1	1	1.0	2	ug/L	06/21/17 12:51	06/22/17 12:01	SW7470A
7782-49-2	Selenium	50	U	1	48	50.0	100	ug/L	06/21/17 11:31	06/21/17 18:07	SW6010
7440-22-4	Silver	12.5	U	1	12.5	12.5	50	ug/L	06/21/17 11:31	06/21/17 18:07	SW6010

Color Before:	Colorless	Clarity Before:		Texture:	Clear
Color After:	Colorless	Clarity After:		Artifacts:	Clear
Comments:	TCLP METALS				

U = Not Detected
LOQ = Limit of Quantitation
MDL = Method Detection Limit
LOD = Limit of Detection
D = Dilution
Q = indicates LCS control criteria did not meet requirements

J = Estimated Value
B = Analyte Found in Associated Method Blank
* = indicates the duplicate analysis is not within control limits.
E = Indicates the reported value is estimated because of the presence of interference.
OR = Over Range
N =Spiked sample recovery not within control limits

CHEMTECH 284 Sheffield Street, Mountainside, NJ 07092 Phone: 908 789 8900 Fax: 908 789 8922

Report of Analysis

Client:	LiRo Engineers, Inc.	Date Collected:	06/19/17 13:05
Project:	DDC OEGS - Cross Island Pkwy Storm Extension	Date Received:	06/20/17
Client Sample ID:	SB-04-COMP	SDG No.:	I3799
Lab Sample ID:	I3799-18	Matrix:	SOIL
		% Solid:	100

Parameter	Conc.	Qua.	DF	MDL	LOD	LOQ / CRQL	Units	Prep Date	Date Ana.	Ana Met.
Corrosivity	6.67		1	0	0	0	pH		06/20/17 15:40	9045C
Ignitability	NO		1	0	0	0	oC		06/21/17 10:14	1030
Reactive Cyanide	0.025	U	1	0.025	0.025	0.05	mg/Kg	06/22/17 08:57	06/22/17 10:54	9012B
Reactive Sulfide	10	U	1	10	10	10	mg/Kg	06/21/17 09:30	06/21/17 12:22	9034

Comments:

U = Not Detected
LOQ = Limit of Quantitation
MDL = Method Detection Limit
LOD = Limit of Detection
D = Dilution
Q = indicates LCS control criteria did not meet requirements
H = Sample Analysis Out Of Hold Time

J = Estimated Value
B = Analyte Found in Associated Method Blank
* = indicates the duplicate analysis is not within control limits.
E = Indicates the reported value is estimated because of the presence of interference.
OR = Over Range
N =Spiked sample recovery not within control limits

CHEMTECH 284 Sheffield Street, Mountainside, NJ 07092 Phone: 908 789 8900 Fax: 908 789 8922

Report of Analysis

Client:	LiRo Engineers, Inc.	Date Collected:	06/19/17
Project:	DDC OEGS - Cross Island Pkwy Storm Extension	Date Received:	06/20/17
Client Sample ID:	SB-04-COMP	SDG No.:	I3799
Lab Sample ID:	I3799-18	Matrix:	TCLP
Level (low/med):	low	% Solid:	0

Cas	Parameter	Conc.	Qua.	DF	MDL	LOD	LOQ / CRQL	Units	Prep Date	Date Ana.	Ana Met.
7440-38-2	Arsenic	25	U	1	25	25.0	100	ug/L	06/21/17 11:31	06/21/17 18:20	SW6010
7440-39-3	Barium	1040		1	40	125	500	ug/L	06/21/17 11:31	06/21/17 18:20	SW6010
7440-43-9	Cadmium	7.5	U	1	5	7.5	30	ug/L	06/21/17 11:31	06/21/17 18:20	SW6010
7440-47-3	Chromium	12.5	U	1	11	12.5	50	ug/L	06/21/17 11:31	06/21/17 18:20	SW6010
7439-92-1	Lead	15	U	1	15	15.0	60	ug/L	06/21/17 11:31	06/21/17 18:20	SW6010
7439-97-6	Mercury	1	U	1	1	1.0	2	ug/L	06/21/17 12:51	06/22/17 12:03	SW7470A
7782-49-2	Selenium	50	U	1	48	50.0	100	ug/L	06/21/17 11:31	06/21/17 18:20	SW6010
7440-22-4	Silver	12.5	U	1	12.5	12.5	50	ug/L	06/21/17 11:31	06/21/17 18:20	SW6010

Color Before:	Colorless	Clarity Before:		Texture:	Clear
Color After:	Colorless	Clarity After:		Artifacts:	Clear
Comments:	TCLP METALS				

U = Not Detected
LOQ = Limit of Quantitation
MDL = Method Detection Limit
LOD = Limit of Detection
D = Dilution
Q = indicates LCS control criteria did not meet requirements

J = Estimated Value
B = Analyte Found in Associated Method Blank
* = indicates the duplicate analysis is not within control limits.
E = Indicates the reported value is estimated because of the presence of interference.
OR = Over Range
N =Spiked sample recovery not within control limits

CHEMTECH 284 Sheffield Street, Mountainside, NJ 07092 Phone: 908 789 8900 Fax: 908 789 8922

Report of Analysis

Client:	LiRo Engineers, Inc.	Date Collected:	06/20/17 08:15
Project:	DDC OEGS - Cross Island Pkwy Storm Extension	Date Received:	06/20/17
Client Sample ID:	SB-05-COMP	SDG No.:	I3799
Lab Sample ID:	I3799-19	Matrix:	SOIL
		% Solid:	100

Parameter	Conc.	Qua.	DF	MDL	LOD	LOQ / CRQL	Units	Prep Date	Date Ana.	Ana Met.
Corrosivity	7.62		1	0	0	0	pH		06/20/17 15:42	9045C
Ignitability	NO		1	0	0	0	oC		06/21/17 10:25	1030
Reactive Cyanide	0.025	U	1	0.025	0.025	0.05	mg/Kg	06/22/17 08:57	06/22/17 10:54	9012B
Reactive Sulfide	11.1		1	10	10	10	mg/Kg	06/21/17 09:30	06/21/17 12:25	9034

Comments:

U = Not Detected
LOQ = Limit of Quantitation
MDL = Method Detection Limit
LOD = Limit of Detection
D = Dilution
Q = indicates LCS control criteria did not meet requirements
H = Sample Analysis Out Of Hold Time

J = Estimated Value
B = Analyte Found in Associated Method Blank
* = indicates the duplicate analysis is not within control limits.
E = Indicates the reported value is estimated because of the presence of interference.
OR = Over Range
N =Spiked sample recovery not within control limits

CHEMTECH 284 Sheffield Street, Mountainside, NJ 07092 Phone: 908 789 8900 Fax: 908 789 8922

Report of Analysis

Client:	LiRo Engineers, Inc.	Date Collected:	06/20/17
Project:	DDC OEGS - Cross Island Pkwy Storm Extension	Date Received:	06/20/17
Client Sample ID:	SB-05-COMP	SDG No.:	I3799
Lab Sample ID:	I3799-19	Matrix:	TCLP
Level (low/med):	low	% Solid:	0

Cas	Parameter	Conc.	Qua.	DF	MDL	LOD	LOQ / CRQL	Units	Prep Date	Date Ana.	Ana Met.
7440-38-2	Arsenic	25	U	1	25	25.0	100	ug/L	06/21/17 11:31	06/21/17 18:24	SW6010
7440-39-3	Barium	1110		1	40	125	500	ug/L	06/21/17 11:31	06/21/17 18:24	SW6010
7440-43-9	Cadmium	7.5	U	1	5	7.5	30	ug/L	06/21/17 11:31	06/21/17 18:24	SW6010
7440-47-3	Chromium	12.5	U	1	11	12.5	50	ug/L	06/21/17 11:31	06/21/17 18:24	SW6010
7439-92-1	Lead	15	U	1	15	15.0	60	ug/L	06/21/17 11:31	06/21/17 18:24	SW6010
7439-97-6	Mercury	1	U	1	1	1.0	2	ug/L	06/21/17 12:51	06/22/17 12:05	SW7470A
7782-49-2	Selenium	50	U	1	48	50.0	100	ug/L	06/21/17 11:31	06/21/17 18:24	SW6010
7440-22-4	Silver	12.5	U	1	12.5	12.5	50	ug/L	06/21/17 11:31	06/21/17 18:24	SW6010

Color Before:	Colorless	Clarity Before:		Texture:	Clear
Color After:	Colorless	Clarity After:		Artifacts:	Clear
Comments:	TCLP METALS				

U = Not Detected
LOQ = Limit of Quantitation
MDL = Method Detection Limit
LOD = Limit of Detection
D = Dilution
Q = indicates LCS control criteria did not meet requirements

J = Estimated Value
B = Analyte Found in Associated Method Blank
* = indicates the duplicate analysis is not within control limits.
E = Indicates the reported value is estimated because of the presence of interference.
OR = Over Range
N =Spiked sample recovery not within control limits

CHEMTECH 284 Sheffield Street, Mountainside, NJ 07092 Phone: 908 789 8900 Fax: 908 789 8922

Report of Analysis

Client:	LiRo Engineers, Inc.	Date Collected:	06/20/17 08:45
Project:	DDC OEGS - Cross Island Pkwy Storm Extension	Date Received:	06/20/17
Client Sample ID:	SB-06-COMP	SDG No.:	I3799
Lab Sample ID:	I3799-20	Matrix:	SOIL
		% Solid:	100

Parameter	Conc.	Qua.	DF	MDL	LOD	LOQ / CRQL	Units	Prep Date	Date Ana.	Ana Met.
Corrosivity	7.8		1	0	0	0	pH		06/20/17 15:43	9045C
Ignitability	NO		1	0	0	0	oC		06/21/17 10:35	1030
Reactive Cyanide	0.025	U	1	0.025	0.025	0.05	mg/Kg	06/22/17 08:57	06/22/17 11:00	9012B
Reactive Sulfide	11.1		1	10	10	10	mg/Kg	06/21/17 09:30	06/21/17 12:28	9034

Comments:

U = Not Detected
LOQ = Limit of Quantitation
MDL = Method Detection Limit
LOD = Limit of Detection
D = Dilution
Q = indicates LCS control criteria did not meet requirements
H = Sample Analysis Out Of Hold Time

J = Estimated Value
B = Analyte Found in Associated Method Blank
* = indicates the duplicate analysis is not within control limits.
E = Indicates the reported value is estimated because of the presence of interference.
OR = Over Range
N =Spiked sample recovery not within control limits

CHEMTECH 284 Sheffield Street, Mountainside, NJ 07092 Phone: 908 789 8900 Fax: 908 789 8922

Report of Analysis

Client:	LiRo Engineers, Inc.	Date Collected:	06/20/17
Project:	DDC OEGS - Cross Island Pkwy Storm Extension	Date Received:	06/20/17
Client Sample ID:	SB-06-COMP	SDG No.:	I3799
Lab Sample ID:	I3799-20	Matrix:	TCLP
Level (low/med):	low	% Solid:	0

Cas	Parameter	Conc.	Qua.	DF	MDL	LOD	LOQ / CRQL	Units	Prep Date	Date Ana.	Ana Met.
7440-38-2	Arsenic	25	U	1	25	25.0	100	ug/L	06/21/17 11:31	06/21/17 18:28	SW6010
7440-39-3	Barium	947		1	40	125	500	ug/L	06/21/17 11:31	06/21/17 18:28	SW6010
7440-43-9	Cadmium	7.5	U	1	5	7.5	30	ug/L	06/21/17 11:31	06/21/17 18:28	SW6010
7440-47-3	Chromium	12.5	U	1	11	12.5	50	ug/L	06/21/17 11:31	06/21/17 18:28	SW6010
7439-92-1	Lead	15	U	1	15	15.0	60	ug/L	06/21/17 11:31	06/21/17 18:28	SW6010
7439-97-6	Mercury	1	U	1	1	1.0	2	ug/L	06/21/17 12:51	06/22/17 12:07	SW7470A
7782-49-2	Selenium	50	U	1	48	50.0	100	ug/L	06/21/17 11:31	06/21/17 18:28	SW6010
7440-22-4	Silver	12.5	U	1	12.5	12.5	50	ug/L	06/21/17 11:31	06/21/17 18:28	SW6010

Color Before:	Colorless	Clarity Before:		Texture:	Clear
Color After:	Colorless	Clarity After:		Artifacts:	Clear
Comments:	TCLP METALS				

U = Not Detected
LOQ = Limit of Quantitation
MDL = Method Detection Limit
LOD = Limit of Detection
D = Dilution
Q = indicates LCS control criteria did not meet requirements

J = Estimated Value
B = Analyte Found in Associated Method Blank
* = indicates the duplicate analysis is not within control limits.
E = Indicates the reported value is estimated because of the presence of interference.
OR = Over Range
N =Spiked sample recovery not within control limits

CHEMTECH 284 Sheffield Street, Mountainside, NJ 07092 Phone: 908 789 8900 Fax: 908 789 8922

Report of Analysis

Client:	LiRo Engineers, Inc.	Date Collected:	06/20/17 09:45
Project:	DDC OEGS - Cross Island Pkwy Storm Extension	Date Received:	06/20/17
Client Sample ID:	SB-07-COMP	SDG No.:	I3799
Lab Sample ID:	I3799-21	Matrix:	SOIL
		% Solid:	100

Parameter	Conc.	Qua.	DF	MDL	LOD	LOQ / CRQL	Units	Prep Date	Date Ana.	Ana Met.
Corrosivity	7.53		1	0	0	0	pH		06/20/17 15:45	9045C
Ignitability	NO		1	0	0	0	oC		06/21/17 10:45	1030
Reactive Cyanide	0.025	U	1	0.025	0.025	0.05	mg/Kg	06/22/17 08:57	06/22/17 11:00	9012B
Reactive Sulfide	30.2		1	10	10	10	mg/Kg	06/21/17 09:30	06/21/17 12:32	9034

Comments:

U = Not Detected
LOQ = Limit of Quantitation
MDL = Method Detection Limit
LOD = Limit of Detection
D = Dilution
Q = indicates LCS control criteria did not meet requirements
H = Sample Analysis Out Of Hold Time

J = Estimated Value
B = Analyte Found in Associated Method Blank
* = indicates the duplicate analysis is not within control limits.
E = Indicates the reported value is estimated because of the presence of interference.
OR = Over Range
N =Spiked sample recovery not within control limits

CHEMTECH 284 Sheffield Street, Mountainside, NJ 07092 Phone: 908 789 8900 Fax: 908 789 8922

Report of Analysis

Client:	LiRo Engineers, Inc.	Date Collected:	06/20/17
Project:	DDC OEGS - Cross Island Pkwy Storm Extension	Date Received:	06/20/17
Client Sample ID:	SB-07-COMP	SDG No.:	I3799
Lab Sample ID:	I3799-21	Matrix:	TCLP
Level (low/med):	low	% Solid:	0

Cas	Parameter	Conc.	Qua.	DF	MDL	LOD	LOQ / CRQL	Units	Prep Date	Date Ana.	Ana Met.
7440-38-2	Arsenic	25	U	1	25	25.0	100	ug/L	06/21/17 11:31	06/21/17 18:32	SW6010
7440-39-3	Barium	1260		1	40	125	500	ug/L	06/21/17 11:31	06/21/17 18:32	SW6010
7440-43-9	Cadmium	7.5	U	1	5	7.5	30	ug/L	06/21/17 11:31	06/21/17 18:32	SW6010
7440-47-3	Chromium	23.8	J	1	11	12.5	50	ug/L	06/21/17 11:31	06/21/17 18:32	SW6010
7439-92-1	Lead	15	U	1	15	15.0	60	ug/L	06/21/17 11:31	06/21/17 18:32	SW6010
7439-97-6	Mercury	1	U	1	1	1.0	2	ug/L	06/21/17 12:51	06/22/17 12:09	SW7470A
7782-49-2	Selenium	50	U	1	48	50.0	100	ug/L	06/21/17 11:31	06/21/17 18:32	SW6010
7440-22-4	Silver	12.5	U	1	12.5	12.5	50	ug/L	06/21/17 11:31	06/21/17 18:32	SW6010

Color Before:	Colorless	Clarity Before:		Texture:	Clear
Color After:	Colorless	Clarity After:		Artifacts:	Clear
Comments:	TCLP METALS				

U = Not Detected
LOQ = Limit of Quantitation
MDL = Method Detection Limit
LOD = Limit of Detection
D = Dilution
Q = indicates LCS control criteria did not meet requirements

J = Estimated Value
B = Analyte Found in Associated Method Blank
* = indicates the duplicate analysis is not within control limits.
E = Indicates the reported value is estimated because of the presence of interference.
OR = Over Range
N =Spiked sample recovery not within control limits

CHEMTECH 284 Sheffield Street, Mountainside, NJ 07092 Phone: 908 789 8900 Fax: 908 789 8922

Report of Analysis

Client:	LiRo Engineers, Inc.	Date Collected:	06/20/17 11:00
Project:	DDC OEGS - Cross Island Pkwy Storm Extension	Date Received:	06/20/17
Client Sample ID:	SB-08-COMP	SDG No.:	I3799
Lab Sample ID:	I3799-22	Matrix:	SOIL
		% Solid:	100

Parameter	Conc.	Qua.	DF	MDL	LOD	LOQ / CRQL	Units	Prep Date	Date Ana.	Ana Met.
Corrosivity	8.3		1	0	0	0	pH		06/20/17 15:46	9045C
Ignitability	NO		1	0	0	0	oC		06/21/17 10:54	1030
Reactive Cyanide	0.025	U	1	0.025	0.025	0.05	mg/Kg	06/22/17 08:57	06/22/17 11:00	9012B
Reactive Sulfide	23.8		1	10	10	10	mg/Kg	06/21/17 09:30	06/21/17 12:35	9034

Comments:

U = Not Detected
LOQ = Limit of Quantitation
MDL = Method Detection Limit
LOD = Limit of Detection
D = Dilution
Q = indicates LCS control criteria did not meet requirements
H = Sample Analysis Out Of Hold Time

J = Estimated Value
B = Analyte Found in Associated Method Blank
* = indicates the duplicate analysis is not within control limits.
E = Indicates the reported value is estimated because of the presence of interference.
OR = Over Range
N =Spiked sample recovery not within control limits

CHEMTECH 284 Sheffield Street, Mountainside, NJ 07092 Phone: 908 789 8900 Fax: 908 789 8922

Report of Analysis

Client:	LiRo Engineers, Inc.	Date Collected:	06/20/17
Project:	DDC OEGS - Cross Island Pkwy Storm Extension	Date Received:	06/20/17
Client Sample ID:	SB-08-COMP	SDG No.:	I3799
Lab Sample ID:	I3799-22	Matrix:	TCLP
Level (low/med):	low	% Solid:	0

Cas	Parameter	Conc.	Qua.	DF	MDL	LOD	LOQ / CRQL	Units	Prep Date	Date Ana.	Ana Met.
7440-38-2	Arsenic	25	U	1	25	25.0	100	ug/L	06/21/17 11:31	06/21/17 18:37	SW6010
7440-39-3	Barium	1330		1	40	125	500	ug/L	06/21/17 11:31	06/21/17 18:37	SW6010
7440-43-9	Cadmium	7.5	U	1	5	7.5	30	ug/L	06/21/17 11:31	06/21/17 18:37	SW6010
7440-47-3	Chromium	18.4	J	1	11	12.5	50	ug/L	06/21/17 11:31	06/21/17 18:37	SW6010
7439-92-1	Lead	15	U	1	15	15.0	60	ug/L	06/21/17 11:31	06/21/17 18:37	SW6010
7439-97-6	Mercury	1	U	1	1	1.0	2	ug/L	06/21/17 12:51	06/22/17 12:11	SW7470A
7782-49-2	Selenium	50	U	1	48	50.0	100	ug/L	06/21/17 11:31	06/21/17 18:37	SW6010
7440-22-4	Silver	12.5	U	1	12.5	12.5	50	ug/L	06/21/17 11:31	06/21/17 18:37	SW6010

Color Before:	Colorless	Clarity Before:		Texture:	Clear
Color After:	Colorless	Clarity After:		Artifacts:	Clear
Comments:	TCLP METALS				

U = Not Detected
LOQ = Limit of Quantitation
MDL = Method Detection Limit
LOD = Limit of Detection
D = Dilution
Q = indicates LCS control criteria did not meet requirements

J = Estimated Value
B = Analyte Found in Associated Method Blank
* = indicates the duplicate analysis is not within control limits.
E = Indicates the reported value is estimated because of the presence of interference.
OR = Over Range
N =Spiked sample recovery not within control limits

CHEMTECH 284 Sheffield Street, Mountainside, NJ 07092 Phone: 908 789 8900 Fax: 908 789 8922

DATA FOR

VOLATILE ORGANICS

SEMI-VOLATILE ORGANICS

GC SEMI-VOLATILES

METALS

PROJECT NAME : DDC OEGS - CROSS ISLAND PHASE 2

LIRO ENGINEERS, INC.

690 Delaware Ave.

Buffalo, NY - 14209

Phone No: 716-882-5476

ORDER ID : I4187

ATTENTION : Steve Frank

ACCREDITED IN ACCORDANCE WITH nelac

DoD ELAP

CHEMTECH 284 Sheffield Street, Mountainside, NJ 07092 Phone: 908 789 8900 Fax: 908 789 8922

Date : 07/20/2017

Dear Steve Frank,

9 soil samples for the **DDC OEGS - Cross Island Phase 2** project were received on **07/13/2017.** The analytical fax results for those samples requested for an expedited turn around time may be seen in this report. Please contact me if you have any questions or concerns regarding this report.

The invoice for this workorder is also attached to the e-mail.

Regards,

Loreana Davi

Loreana@chemtech.net

CHEMTECH
CHAIN OF CUSTODY RECORD

284 Sheffield Street, Mountainside, NJ 07092
(908) 789-8900 Fax (908) 789-8922
www.chemtech.net

CHEMTECH PROJECT NO. I4187
QUOTE NO.
COC Number 041173

CLIENT INFORMATION (REPORT TO BE SENT TO:)

COMPANY: LIRO ENGINEERS, INC
ADDRESS: 690 DELAWARE AVE
CITY: BUFFALO STATE: NY ZIP: 14209
ATTENTION: STEVE FRANK
PHONE: 716-882-5476 FAX:

CLIENT PROJECT INFORMATION

PROJECT NAME: OEGS NYCDDC CONTRACT CROSS ISLAND PH 2
PROJECT NO.: TASK 12709 LOCATION: CROSS ISLAND & 87 AVE QUEENS
PROJECT MANAGER: STEVE FRANK
e-mail: FRANKS@liro.com
PHONE: FAX:

CLIENT BILLING INFORMATION

BILL TO: SAME PO#:
ADDRESS:
CITY: STATE: ZIP:
ATTENTION: PHONE:

DATA TURNAROUND INFORMATION

FAX: _____ DAYS *
HARD COPY: _____ DAYS *
EDD: 5 as per CONTRACT DAYS *
PREAPPROVED TAT: ☒ YES ☐ NO
* STANDARD TURNAROUND TIME IS 10 BUSINESS DAYS

DATA DELIVERABLE INFORMATION

☐ LEVEL 1: Results only ☐ Others _____
☐ LEVEL 2: Results + QC
☐ LEVEL 3: Results (plus results raw data) + QC
☐ LEVEL 4: Results + QC (all raw data)
☐ EDD Format: _____

ANALYSIS

	1	2	3	4	5	6	7	8	9
	TCL VOC	TCL SVOC	TAL METALS	PCBS	PESTICIDES				

CHEMTECH SAMPLE ID	PROJECT SAMPLE IDENTIFICATION	SAMPLE MATRIX	SAMPLE TYPE COMP	SAMPLE TYPE GRAB	SAMPLE COLLECTION DATE	SAMPLE COLLECTION TIME	# OF BOTTLES	PRESERVATIVES 1 (E)	2 (E)	3 (E)	4 (E)	5 (E)	6 (Ba)	7	8	9	COMMENTS
1.	CI-SB1-0-2'	SOIL	↑	↑	7/12/17	12:30		X	X	X	X	X					
2.	CI-SB2-0-2'					1:00		X	X	X	X	X					
3.	CI-SB3-0-2'					1:30		X	X	X	X	X					
4.	CI-SB4-0-2'					2:00		X	X	X	X	X					
5.	CI-SB5-0-2'					2:30		X	X	X	X	X					
6.	CI-SB6-0-2'					3:00		X	X	X	X	X					
7.	CI-SB7-0-2'					3:30		X	X	X	X	X					
8.	CI-SB8-0-2'					4:00		X	X	X	X	X					
9.	CI-SB9-0-2'	↓	↓	↓	↓	4:30		X	X	X	X	X					
10.																	

8 oz COMPOSITE
VOC 40z GRAB

← Specify Preservatives
A-HCl B-HNO_3
C-H_2SO_4 D-NaOH
E-ICE F-Other

HAZ-269

SAMPLE CUSTODY MUST BE DOCUMENTED BELOW EACH TIME SAMPLES CHANGE POSSESSION INCLUDING COURIER DELIVERY

RELINQUISHED BY SAMPLER:	DATE/TIME:	RECEIVED BY:
1. [signature]	7/13/17 11:06 AM	1. [signature]
RELINQUISHED BY:	DATE/TIME:	RECEIVED BY:
2. [signature]		2.
RELINQUISHED BY:	DATE/TIME:	RECEIVED FOR LAB BY:
3. [signature]	7-13-17 1500	3. Jason Sneal

Conditions of bottles or coolers at receipt: ☐ Compliant ☐ Non Compliant
MeOH extraction requires an additional 4 oz jar for percent solid.
Comments:

Cooler Temp. 5.4/1°C
Ice In Cooler?: yes

Page _____ of _____

SHIPPED VIA: CLIENT: ☐ HAND DELIVERED ☐ OVERNIGHT
CHEMTECH: ☒ PICKED UP ☐ OVERNIGHT

Shipment Complete: ☐ YES ☐ NO

Revision 8/2

WHITE - CHEMTECH COPY FOR RETURN TO CLIENT YELLOW - CHEMTECH COPY PINK - SAMPLER COPY

CHEMTECH 284 Sheffield Street, Mountainside, NJ 07092 Phone: 908 789 8900 Fax: 908 789 8922

Report of Analysis

Client:	LiRo Engineers, Inc.	Date Collected:	07/12/17
Project:	DDC OEGS - Cross Island Phase 2	Date Received:	07/13/17
Client Sample ID:	CI-SB1-0-2	SDG No.:	I4187
Lab Sample ID:	I4187-01	Matrix:	SOIL
Level (low/med):	low	% Solid:	95.5

Cas	Parameter	Conc.	Qua.	DF	MDL	LOD	LOQ / CRQL	Units(Dry Weight)	Prep Date	Date Ana.	Ana Met.
7429-90-5	Aluminum	5330		1	0.733	1.09	4.36	mg/Kg	07/14/17 10:05	07/19/17 17:55	SW6010
7440-36-0	Antimony	0.545	UN	1	0.489	0.545	2.18	mg/Kg	07/14/17 10:05	07/19/17 17:55	SW6010
7440-38-2	Arsenic	2.63		1	0.218	0.218	0.873	mg/Kg	07/14/17 10:05	07/19/17 17:55	SW6010
7440-39-3	Barium	19.8		1	0.349	1.09	4.36	mg/Kg	07/14/17 10:05	07/19/17 17:55	SW6010
7440-41-7	Beryllium	0.199	J	1	0.052	0.065	0.262	mg/Kg	07/14/17 10:05	07/19/17 17:55	SW6010
7440-43-9	Cadmium	0.18	J	1	0.052	0.065	0.262	mg/Kg	07/14/17 10:05	07/19/17 17:55	SW6010
7440-70-2	Calcium	1870		1	0.934	21.8	87.3	mg/Kg	07/14/17 10:05	07/19/17 17:55	SW6010
7440-47-3	Chromium	9.05		1	0.109	0.109	0.436	mg/Kg	07/14/17 10:05	07/19/17 17:55	SW6010
7440-48-4	Cobalt	4.35		1	0.327	0.327	1.31	mg/Kg	07/14/17 10:05	07/19/17 17:55	SW6010
7440-50-8	Copper	8.66		1	0.218	0.218	0.873	mg/Kg	07/14/17 10:05	07/19/17 17:55	SW6010
7439-89-6	Iron	9900		1	1.09	1.09	4.36	mg/Kg	07/14/17 10:05	07/19/17 17:55	SW6010
7439-92-1	Lead	13.2		1	0.105	0.218	0.524	mg/Kg	07/14/17 10:05	07/19/17 17:55	SW6010
7439-95-4	Magnesium	1390		1	4	21.8	87.3	mg/Kg	07/14/17 10:05	07/19/17 17:55	SW6010
7439-96-5	Manganese	150		1	0.166	0.218	0.873	mg/Kg	07/14/17 10:05	07/19/17 17:55	SW6010
7439-97-6	Mercury	0.064		1	0.007	0.007	0.014	mg/Kg	07/17/17 12:53	07/18/17 09:59	SW7471A
7440-02-0	Nickel	13.4		1	0.401	0.436	1.75	mg/Kg	07/14/17 10:05	07/19/17 17:55	SW6010
7440-09-7	Potassium	363		1	3.05	21.8	87.3	mg/Kg	07/14/17 10:05	07/19/17 17:55	SW6010
7782-49-2	Selenium	3.43		1	0.218	0.218	0.873	mg/Kg	07/14/17 10:05	07/19/17 17:55	SW6010
7440-22-4	Silver	0.808		1	0.109	0.109	0.436	mg/Kg	07/14/17 10:05	07/19/17 17:55	SW6010
7440-23-5	Sodium	32.6	J	1	2.2	21.8	87.3	mg/Kg	07/14/17 10:05	07/19/17 17:55	SW6010
7440-28-0	Thallium	0.256	J	1	0.236	0.436	1.75	mg/Kg	07/14/17 10:05	07/19/17 17:55	SW6010
7440-62-2	Vanadium	12.8		1	0.436	0.436	1.75	mg/Kg	07/14/17 10:05	07/19/17 17:55	SW6010
7440-66-6	Zinc	22.2		1	0.436	0.436	1.75	mg/Kg	07/14/17 10:05	07/19/17 17:55	SW6010

Color Before:	Brown	Clarity Before:		Texture:	Medium
Color After:	Yellow	Clarity After:		Artifacts:	No
Comments:	METALS-TAL				

U = Not Detected
LOQ = Limit of Quantitation
MDL = Method Detection Limit
LOD = Limit of Detection
D = Dilution
Q = indicates LCS control criteria did not meet requirements

J = Estimated Value
B = Analyte Found in Associated Method Blank
* = indicates the duplicate analysis is not within control limits.
E = Indicates the reported value is estimated because of the presence of interference.
OR = Over Range
N =Spiked sample recovery not within control limits

CHEMTECH 284 Sheffield Street, Mountainside, NJ 07092 Phone: 908 789 8900 Fax: 908 789 8922

Report of Analysis

Client:	LiRo Engineers, Inc.	Date Collected:	07/12/17
Project:	DDC OEGS - Cross Island Phase 2	Date Received:	07/13/17
Client Sample ID:	CI-SB1-0-2	SDG No.:	I4187
Lab Sample ID:	I4187-01	Matrix:	SOIL
Analytical Method:	SW8082A	% Moisture:	4.5 Decanted:
Sample Wt/Vol:	30.12 Units: g	Final Vol:	10000 uL
Soil Aliquot Vol:	uL	Test:	PCB
Extraction Type:		Injection Volume :	
GPC Factor :	1.0 PH :		

File ID/Qc Batch:	Dilution:	Prep Date	Date Analyzed	Prep Batch ID
PQ019422.D	1	07/14/17 10:55	07/18/17 15:36	PB100661

CAS Number	Parameter	Conc.	Qualifier	MDL	LOD	LOQ / CRQL	Units(Dry Weight)
TARGETS							
12674-11-2	Aroclor-1016	3.5	U	3.5	3.5	17.7	ug/kg
11104-28-2	Aroclor-1221	3.5	U	3.5	3.5	17.7	ug/kg
11141-16-5	Aroclor-1232	3.5	U	3.5	3.5	17.7	ug/kg
53469-21-9	Aroclor-1242	3.5	U	3.5	3.5	17.7	ug/kg
12672-29-6	Aroclor-1248	3.5	U	3.5	3.5	17.7	ug/kg
11097-69-1	Aroclor-1254	3.5	U	1.6	3.5	17.7	ug/kg
37324-23-5	Aroclor-1262	3.5	U	3.5	3.5	17.7	ug/kg
11100-14-4	Aroclor-1268	3.5	U	3.5	3.5	17.7	ug/kg
11096-82-5	Aroclor-1260	3.5	U	3.5	3.5	17.7	ug/kg
SURROGATES							
877-09-8	Tetrachloro-m-xylene	25		10 - 166		125%	SPK: 20
2051-24-3	Decachlorobiphenyl	17.6		60 - 125		88%	SPK: 20

Comments:

U = Not Detected
LOQ = Limit of Quantitation
MDL = Method Detection Limit
LOD = Limit of Detection
E = Value Exceeds Calibration Range
P = Indicates >25% difference for detected concentrations between the two GC columns
Q = indicates LCS control criteria did not meet requirements
M = MS/MSD acceptance criteria did not meet requirements

J = Estimated Value
B = Analyte Found in Associated Method Blank
N = Presumptive Evidence of a Compound
* = Values outside of QC limits
D = Dilution
S = Indicates estimated value where valid five-point calibration was not performed prior to analyte detection in sample.
() = Laboratory InHouse Limit

CHEMTECH 284 Sheffield Street, Mountainside, NJ 07092 Phone: 908 789 8900 Fax: 908 789 8922

Report of Analysis

Client:	LiRo Engineers, Inc.	Date Collected:	07/12/17
Project:	DDC OEGS - Cross Island Phase 2	Date Received:	07/13/17
Client Sample ID:	CI-SB1-0-2	SDG No.:	I4187
Lab Sample ID:	I4187-01	Matrix:	SOIL
Analytical Method:	SW8081	% Moisture:	4.5 Decanted:
Sample Wt/Vol:	30.12 Units: g	Final Vol:	10000 uL
Soil Aliquot Vol:	uL	Test:	PESTICIDE Group1
Extraction Type:		Injection Volume :	
GPC Factor :	1.0 PH :		

File ID/Qc Batch:	Dilution:	Prep Date	Date Analyzed	Prep Batch ID
PL027272.D	1	07/14/17 08:10	07/14/17 17:38	PB100634

CAS Number	Parameter	Conc.	Qualifier	MDL	LOD	LOQ / CRQL	Units(Dry Weight)
TARGETS							
319-84-6	alpha-BHC	0.344	U	0.136	0.344	1.8	ug/kg
319-85-7	beta-BHC	0.344	U	0.188	0.344	1.8	ug/kg
319-86-8	delta-BHC	0.344	U	0.104	0.344	1.8	ug/kg
58-89-9	gamma-BHC (Lindane)	0.344	U	0.156	0.344	1.8	ug/kg
76-44-8	Heptachlor	0.344	U	0.146	0.344	1.8	ug/kg
309-00-2	Aldrin	0.344	U	0.104	0.344	1.8	ug/kg
1024-57-3	Heptachlor epoxide	0.344	U	0.167	0.344	1.8	ug/kg
959-98-8	Endosulfan I	0.344	U	0.156	0.344	1.8	ug/kg
60-57-1	Dieldrin	0.344	U	0.136	0.344	1.8	ug/kg
72-55-9	4,4-DDE	3.3		0.209	0.344	1.8	ug/kg
72-20-8	Endrin	0.344	U	0.188	0.344	1.8	ug/kg
33213-65-9	Endosulfan II	0.344	U	0.146	0.344	1.8	ug/kg
72-54-8	4,4-DDD	1.3	JP	0.177	0.344	1.8	ug/kg
1031-07-8	Endosulfan Sulfate	0.344	U	0.156	0.344	1.8	ug/kg
50-29-3	4,4-DDT	7.8		0.146	0.344	1.8	ug/kg
72-43-5	Methoxychlor	0.344	U	0.177	0.344	1.8	ug/kg
53494-70-5	Endrin ketone	0.344	U	0.136	0.344	1.8	ug/kg
7421-93-4	Endrin aldehyde	0.344	U	0.156	0.344	1.8	ug/kg
5103-71-9	alpha-Chlordane	10.8	P	0.146	0.344	1.8	ug/kg
5103-74-2	gamma-Chlordane	5.2	P	0.136	0.344	1.8	ug/kg
8001-35-2	Toxaphene	3.5	U	3.5	3.5	17.7	ug/kg
SURROGATES							
2051-24-3	Decachlorobiphenyl	16.9		10 - 169		84%	SPK: 20
877-09-8	Tetrachloro-m-xylene	14.3		31 - 151		72%	SPK: 20

CHEMTECH 284 Sheffield Street, Mountainside, NJ 07092 Phone: 908 789 8900 Fax: 908 789 8922

Report of Analysis

Client:	LiRo Engineers, Inc.	Date Collected:	07/12/17
Project:	DDC OEGS - Cross Island Phase 2	Date Received:	07/13/17
Client Sample ID:	CI-SB1-0-2	SDG No.:	I4187
Lab Sample ID:	I4187-01	Matrix:	SOIL
Analytical Method:	SW8081	% Moisture:	4.5 Decanted:
Sample Wt/Vol:	30.12 Units: g	Final Vol:	10000 uL
Soil Aliquot Vol:	uL	Test:	PESTICIDE Group1
Extraction Type:		Injection Volume :	
GPC Factor :	1.0 PH :		

File ID/Qc Batch:	Dilution:	Prep Date	Date Analyzed	Prep Batch ID
PL027272.D	1	07/14/17 08:10	07/14/17 17:38	PB100634

CAS Number	Parameter	Conc.	Qualifier	MDL	LOD	LOQ / CRQL	Units

Comments:

U = Not Detected
LOQ = Limit of Quantitation
MDL = Method Detection Limit
LOD = Limit of Detection
E = Value Exceeds Calibration Range
P = Indicates >25% difference for detected concentrations between the two GC columns
Q = indicates LCS control criteria did not meet requirements
M = MS/MSD acceptance criteria did not meet requirements

J = Estimated Value
B = Analyte Found in Associated Method Blank
N = Presumptive Evidence of a Compound
* = Values outside of QC limits
D = Dilution
S = Indicates estimated value where valid five-point calibration was not performed prior to analyte detection in sample.
() = Laboratory InHouse Limit

CHEMTECH 284 Sheffield Street, Mountainside, NJ 07092 Phone: 908 789 8900 Fax: 908 789 8922

Report of Analysis

Client:	LiRo Engineers, Inc.	Date Collected:	07/12/17
Project:	DDC OEGS - Cross Island Phase 2	Date Received:	07/13/17
Client Sample ID:	CI-SB1-0-2	SDG No.:	I4187
Lab Sample ID:	I4187-01	Matrix:	SOIL
Analytical Method:	SW8270	% Moisture:	4.5
Sample Wt/Vol:	30.07 Units: g	Final Vol:	1000 uL
Soil Aliquot Vol:	uL	Test:	SVOCMS Group1
Extraction Type :	Decanted : N	Level :	LOW
Injection Volume :	GPC Factor : 1.0	GPC Cleanup :	N PH :

File ID/Qc Batch:	Dilution:	Prep Date	Date Analyzed	Prep Batch ID
BF096791.D	1	07/14/17 09:53	07/15/17 00:23	PB100644

CAS Number	Parameter	Conc.	Qualifier	MDL	LOD	LOQ / CRQL	Units(Dry Weight)
TARGETS							
100-52-7	Benzaldehyde	34.8	U	18.2	34.8	340	ug/Kg
108-95-2	Phenol	34.8	U	8	34.8	340	ug/Kg
111-44-4	bis(2-Chloroethyl)ether	34.8	U	16.7	34.8	340	ug/Kg
95-57-8	2-Chlorophenol	34.8	U	18.4	34.8	340	ug/Kg
95-48-7	2-Methylphenol	34.8	U	18.9	34.8	340	ug/Kg
108-60-1	2,2-oxybis(1-Chloropropane)	34.8	U	14.4	34.8	340	ug/Kg
98-86-2	Acetophenone	34.8	U	10.7	34.8	340	ug/Kg
65794-96-9	3+4-Methylphenols	34.8	U	18.1	34.8	340	ug/Kg
621-64-7	n-Nitroso-di-n-propylamine	34.8	U	17.6	34.8	340	ug/Kg
67-72-1	Hexachloroethane	34.8	U	15.6	34.8	340	ug/Kg
98-95-3	Nitrobenzene	34.8	U	13.2	34.8	340	ug/Kg
78-59-1	Isophorone	34.8	U	11.5	34.8	340	ug/Kg
88-75-5	2-Nitrophenol	34.8	U	16.8	34.8	340	ug/Kg
105-67-9	2,4-Dimethylphenol	34.8	U	19.7	34.8	340	ug/Kg
111-91-1	bis(2-Chloroethoxy)methane	34.8	U	20.1	34.8	340	ug/Kg
120-83-2	2,4-Dichlorophenol	34.8	U	13.3	34.8	340	ug/Kg
91-20-3	Naphthalene	34.8	U	12	34.8	340	ug/Kg
106-47-8	4-Chloroaniline	34.8	U	24.6	34.8	340	ug/Kg
87-68-3	Hexachlorobutadiene	34.8	U	12.6	34.8	340	ug/Kg
105-60-2	Caprolactam	69.6	U	16.2	69.6	340	ug/Kg
59-50-7	4-Chloro-3-methylphenol	34.8	U	15.5	34.8	340	ug/Kg
91-57-6	2-Methylnaphthalene	34.8	U	8.8	34.8	340	ug/Kg
77-47-4	Hexachlorocyclopentadiene	34.8	U	8.5	34.8	340	ug/Kg
88-06-2	2,4,6-Trichlorophenol	34.8	U	10.7	34.8	340	ug/Kg
95-95-4	2,4,5-Trichlorophenol	34.8	U	24.4	34.8	340	ug/Kg
92-52-4	1,1-Biphenyl	34.8	U	13.2	34.8	340	ug/Kg
91-58-7	2-Chloronaphthalene	34.8	U	7.9	34.8	340	ug/Kg
88-74-4	2-Nitroaniline	34.8	U	15.5	34.8	340	ug/Kg
131-11-3	Dimethylphthalate	180	J	9.4	34.8	340	ug/Kg
208-96-8	Acenaphthylene	34.8	U	8.8	34.8	340	ug/Kg
606-20-2	2,6-Dinitrotoluene	34.8	U	14.2	34.8	340	ug/Kg

CHEMTECH 284 Sheffield Street, Mountainside, NJ 07092 Phone: 908 789 8900 Fax: 908 789 8922

Report of Analysis

Client:	LiRo Engineers, Inc.	Date Collected:	07/12/17
Project:	DDC OEGS - Cross Island Phase 2	Date Received:	07/13/17
Client Sample ID:	CI-SB1-0-2	SDG No.:	I4187
Lab Sample ID:	I4187-01	Matrix:	SOIL
Analytical Method:	SW8270	% Moisture:	4.5
Sample Wt/Vol:	30.07 Units: g	Final Vol:	1000 uL
Soil Aliquot Vol:	uL	Test:	SVOCMS Group1
Extraction Type :	Decanted : N	Level :	LOW
Injection Volume :	GPC Factor : 1.0	GPC Cleanup :	N PH :

File ID/Qc Batch:	Dilution:	Prep Date	Date Analyzed	Prep Batch ID
BF096791.D	1	07/14/17 09:53	07/15/17 00:23	PB100644

CAS Number	Parameter	Conc.	Qualifier	MDL	LOD	LOQ / CRQL	Units(Dry Weight)
99-09-2	3-Nitroaniline	69.6	U	22.4	69.6	340	ug/Kg
83-32-9	Acenaphthene	34.8	U	9.8	34.8	340	ug/Kg
51-28-5	2,4-Dinitrophenol	280	U	35.4	280	340	ug/Kg
100-02-7	4-Nitrophenol	170	U	64.7	170	340	ug/Kg
132-64-9	Dibenzofuran	34.8	U	13.6	34.8	340	ug/Kg
121-14-2	2,4-Dinitrotoluene	34.8	U	10.4	34.8	340	ug/Kg
84-66-2	Diethylphthalate	34.8	U	5.4	34.8	340	ug/Kg
7005-72-3	4-Chlorophenyl-phenylether	34.8	U	18.9	34.8	340	ug/Kg
86-73-7	Fluorene	34.8	U	13.2	34.8	340	ug/Kg
100-01-6	4-Nitroaniline	69.6	UQ	45.3	69.6	340	ug/Kg
534-52-1	4,6-Dinitro-2-methylphenol	170	U	20	170	340	ug/Kg
86-30-6	n-Nitrosodiphenylamine	34.8	U	8.4	34.8	340	ug/Kg
101-55-3	4-Bromophenyl-phenylether	34.8	U	6.8	34.8	340	ug/Kg
118-74-1	Hexachlorobenzene	34.8	U	14.2	34.8	340	ug/Kg
1912-24-9	Atrazine	34.8	U	18.4	34.8	340	ug/Kg
87-86-5	Pentachlorophenol	34.8	U	23.8	34.8	340	ug/Kg
85-01-8	Phenanthrene	81.3	J	9.4	34.8	340	ug/Kg
120-12-7	Anthracene	34.8	U	7.1	34.8	340	ug/Kg
86-74-8	Carbazole	34.8	U	7.6	34.8	340	ug/Kg
84-74-2	Di-n-butylphthalate	34.8	U	27.4	34.8	340	ug/Kg
206-44-0	Fluoranthene	140	J	7	34.8	340	ug/Kg
129-00-0	Pyrene	89.1	J	8.4	34.8	340	ug/Kg
85-68-7	Butylbenzylphthalate	34.8	UQ	16.7	34.8	340	ug/Kg
91-94-1	3,3-Dichlorobenzidine	34.8	U	22.4	34.8	340	ug/Kg
56-55-3	Benzo(a)anthracene	34.8	U	16.6	34.8	340	ug/Kg
218-01-9	Chrysene	34.8	U	15.8	34.8	340	ug/Kg
117-81-7	Bis(2-ethylhexyl)phthalate	34.8	U	12.3	34.8	340	ug/Kg
117-84-0	Di-n-octyl phthalate	34.8	U	4	34.8	340	ug/Kg
205-99-2	Benzo(b)fluoranthene	86.4	J	11.4	34.8	340	ug/Kg
207-08-9	Benzo(k)fluoranthene	34.8	U	16.4	34.8	340	ug/Kg
50-32-8	Benzo(a)pyrene	34.8	U	7.5	34.8	340	ug/Kg
193-39-5	Indeno(1,2,3-cd)pyrene	34.8	U	11.6	34.8	340	ug/Kg
53-70-3	Dibenzo(a,h)anthracene	34.8	U	10	34.8	340	ug/Kg

CHEMTECH 284 Sheffield Street, Mountainside, NJ 07092 Phone: 908 789 8900 Fax: 908 789 8922

Report of Analysis

Client:	LiRo Engineers, Inc.	Date Collected:	07/12/17
Project:	DDC OEGS - Cross Island Phase 2	Date Received:	07/13/17
Client Sample ID:	CI-SB1-0-2	SDG No.:	I4187
Lab Sample ID:	I4187-01	Matrix:	SOIL
Analytical Method:	SW8270	% Moisture:	4.5
Sample Wt/Vol:	30.07 Units: g	Final Vol:	1000 uL
Soil Aliquot Vol:	uL	Test:	SVOCMS Group1
Extraction Type :	Decanted : N	Level :	LOW
Injection Volume :	GPC Factor : 1.0	GPC Cleanup :	N PH :

File ID/Qc Batch:	Dilution:	Prep Date	Date Analyzed	Prep Batch ID
BF096791.D	1	07/14/17 09:53	07/15/17 00:23	PB100644

CAS Number	Parameter	Conc.	Qualifier	MDL	LOD	LOQ / CRQL	Units(Dry Weight)
191-24-2	Benzo(g,h,i)perylene	34.8	U	14.1	34.8	340	ug/Kg
95-94-3	1,2,4,5-Tetrachlorobenzene	34.8	U	13.7	34.8	340	ug/Kg
123-91-1	1,4-Dioxane	69.6	U	13.7	69.6	340	ug/Kg
58-90-2	2,3,4,6-Tetrachlorophenol	34.8	U	13.7	34.8	340	ug/Kg
SURROGATES							
367-12-4	2-Fluorophenol	87.5		28 - 127		58%	SPK: 150
13127-88-3	Phenol-d6	86.9		34 - 127		58%	SPK: 150
4165-60-0	Nitrobenzene-d5	53.9		31 - 132		54%	SPK: 100
321-60-8	2-Fluorobiphenyl	57.6		39 - 123		58%	SPK: 100
118-79-6	2,4,6-Tribromophenol	78		30 - 133		52%	SPK: 150
1718-51-0	Terphenyl-d14	41.8		37 - 115		42%	SPK: 100
INTERNAL STANDARDS							
3855-82-1	1,4-Dichlorobenzene-d4	107894	6.62				
1146-65-2	Naphthalene-d8	453215	7.9				
15067-26-2	Acenaphthene-d10	221022	9.66				
1517-22-2	Phenanthrene-d10	356797	11.13				
1719-03-5	Chrysene-d12	218943	13.76				
1520-96-3	Perylene-d12	186264	15.14				

U = Not Detected
LOQ = Limit of Quantitation
MDL = Method Detection Limit
LOD = Limit of Detection
E = Value Exceeds Calibration Range
Q = indicates LCS control criteria did not meet requirements
M = MS/MSD acceptance criteria did not meet requirements

J = Estimated Value
B = Analyte Found in Associated Method Blank
N = Presumptive Evidence of a Compound
* = Values outside of QC limits
D = Dilution
() = Laboratory InHouse Limit

CHEMTECH 284 Sheffield Street, Mountainside, NJ 07092 Phone: 908 789 8900 Fax: 908 789 8922

Report of Analysis

Client:	LiRo Engineers, Inc.	Date Collected:	07/12/17
Project:	DDC OEGS - Cross Island Phase 2	Date Received:	07/13/17
Client Sample ID:	CI-SB1-0-2	SDG No.:	I4187
Lab Sample ID:	I4187-01	Matrix:	SOIL
Analytical Method:	SW8260	% Moisture:	4.5
Sample Wt/Vol:	5 Units: g	Final Vol:	5000 uL
Soil Aliquot Vol:	uL	Test:	VOCMS Group1
GC Column:	RTX-VMS ID : 0.18	Level :	LOW

File ID/Qc Batch:	Dilution:	Prep Date	Date Analyzed	Prep Batch ID
VF053627.D	1		07/14/17 18:10	VF071417

CAS Number	Parameter	Conc.	Qualifier	MDL	LOD	LOQ / CRQL	Units(Dry Weight)
TARGETS							
75-71-8	Dichlorodifluoromethane	0.52	U	0.52	0.52	5.2	ug/Kg
74-87-3	Chloromethane	0.52	U	0.52	0.52	5.2	ug/Kg
75-01-4	Vinyl Chloride	0.52	U	0.52	0.52	5.2	ug/Kg
74-83-9	Bromomethane	1	U	1	1	5.2	ug/Kg
75-00-3	Chloroethane	0.52	U	0.52	0.52	5.2	ug/Kg
75-69-4	Trichlorofluoromethane	0.52	UQ	0.52	0.52	5.2	ug/Kg
76-13-1	1,1,2-Trichlorotrifluoroethane	0.52	U	0.52	0.52	5.2	ug/Kg
75-65-0	Tert butyl alcohol	26.2	U	7.8	26.2	26.2	ug/Kg
75-35-4	1,1-Dichloroethene	0.52	UQ	0.52	0.52	5.2	ug/Kg
67-64-1	Acetone	2.6	U	2.6	2.6	26.2	ug/Kg
75-15-0	Carbon Disulfide	0.52	U	0.52	0.52	5.2	ug/Kg
1634-04-4	Methyl tert-butyl Ether	0.52	UQ	0.52	0.52	5.2	ug/Kg
79-20-9	Methyl Acetate	1	U	1	1	5.2	ug/Kg
75-09-2	Methylene Chloride	2.7	J	0.52	0.52	5.2	ug/Kg
156-60-5	trans-1,2-Dichloroethene	0.52	UQ	0.52	0.52	5.2	ug/Kg
75-34-3	1,1-Dichloroethane	0.52	UQ	0.52	0.52	5.2	ug/Kg
110-82-7	Cyclohexane	0.52	U	0.52	0.52	5.2	ug/Kg
78-93-3	2-Butanone	7.9	U	3.3	7.9	26.2	ug/Kg
56-23-5	Carbon Tetrachloride	0.52	U	0.52	0.52	5.2	ug/Kg
156-59-2	cis-1,2-Dichloroethene	0.52	U	0.52	0.52	5.2	ug/Kg
74-97-5	Bromochloromethane	0.52	U	0.52	0.52	5.2	ug/Kg
67-66-3	Chloroform	0.52	UQ	0.52	0.52	5.2	ug/Kg
71-55-6	1,1,1-Trichloroethane	0.52	U	0.52	0.52	5.2	ug/Kg
108-87-2	Methylcyclohexane	0.52	U	0.52	0.52	5.2	ug/Kg
71-43-2	Benzene	0.52	U	0.4	0.52	5.2	ug/Kg
107-06-2	1,2-Dichloroethane	0.52	UQ	0.52	0.52	5.2	ug/Kg
79-01-6	Trichloroethene	0.52	U	0.52	0.52	5.2	ug/Kg
78-87-5	1,2-Dichloropropane	0.52	U	0.27	0.52	5.2	ug/Kg
5-27-4	Bromodichloromethane	0.52	U	0.52	0.52	5.2	ug/Kg
108-10-1	4-Methyl-2-Pentanone	2.6	U	2.6	2.6	26.2	ug/Kg
108-88-3	Toluene	0.52	U	0.52	0.52	5.2	ug/Kg
10061-02-6	t-1,3-Dichloropropene	0.52	U	0.52	0.52	5.2	ug/Kg

CHEMTECH 284 Sheffield Street, Mountainside, NJ 07092 Phone: 908 789 8900 Fax: 908 789 8922

Report of Analysis

Client:	LiRo Engineers, Inc.	Date Collected:	07/12/17
Project:	DDC OEGS - Cross Island Phase 2	Date Received:	07/13/17
Client Sample ID:	CI-SB1-0-2	SDG No.:	I4187
Lab Sample ID:	I4187-01	Matrix:	SOIL
Analytical Method:	SW8260	% Moisture:	4.5
Sample Wt/Vol:	5 Units: g	Final Vol:	5000 uL
Soil Aliquot Vol:	uL	Test:	VOCMS Group1
GC Column:	RTX-VMS ID : 0.18	Level :	LOW

File ID/Qc Batch:	Dilution:	Prep Date	Date Analyzed	Prep Batch ID
VF053627.D	1		07/14/17 18:10	VF071417

CAS Number	Parameter	Conc.	Qualifier	MDL	LOD	LOQ / CRQL	Units(Dry Weight)
10061-01-5	cis-1,3-Dichloropropene	0.52	U	0.52	0.52	5.2	ug/Kg
79-00-5	1,1,2-Trichloroethane	1	U	0.94	1	5.2	ug/Kg
591-78-6	2-Hexanone	2.6	U	2.6	2.6	26.2	ug/Kg
124-48-1	Dibromochloromethane	0.52	U	0.52	0.52	5.2	ug/Kg
106-93-4	1,2-Dibromoethane	0.52	U	0.52	0.52	5.2	ug/Kg
127-18-4	Tetrachloroethene	0.52	U	0.52	0.52	5.2	ug/Kg
108-90-7	Chlorobenzene	0.52	U	0.52	0.52	5.2	ug/Kg
100-41-4	Ethyl Benzene	0.52	U	0.52	0.52	5.2	ug/Kg
179601-23-1	m/p-Xylenes	1	U	0.75	1	10.5	ug/Kg
95-47-6	o-Xylene	0.52	U	0.52	0.52	5.2	ug/Kg
100-42-5	Styrene	0.52	U	0.47	0.52	5.2	ug/Kg
75-25-2	Bromoform	1.6	U	0.77	1.6	5.2	ug/Kg
98-82-8	Isopropylbenzene	0.52	U	0.5	0.52	5.2	ug/Kg
79-34-5	1,1,2,2-Tetrachloroethane	0.52	U	0.48	0.52	5.2	ug/Kg
541-73-1	1,3-Dichlorobenzene	0.52	U	0.39	0.52	5.2	ug/Kg
106-46-7	1,4-Dichlorobenzene	0.52	U	0.43	0.52	5.2	ug/Kg
95-50-1	1,2-Dichlorobenzene	0.52	U	0.52	0.52	5.2	ug/Kg
96-12-8	1,2-Dibromo-3-Chloropropane	5.2	U	0.91	5.2	5.2	ug/Kg
120-82-1	1,2,4-Trichlorobenzene	0.52	U	0.52	0.52	5.2	ug/Kg
87-61-6	1,2,3-Trichlorobenzene	1	U	0.52	1	5.2	ug/Kg
SURROGATES							
17060-07-0	1,2-Dichloroethane-d4	35.3		56 - 120		71%	SPK: 50
1868-53-7	Dibromofluoromethane	47.9		57 - 135		96%	SPK: 50
2037-26-5	Toluene-d8	46		67 - 123		92%	SPK: 50
460-00-4	4-Bromofluorobenzene	39.5		33 - 141		79%	SPK: 50
INTERNAL STANDARDS							
363-72-4	Pentafluorobenzene	513300	4.82				
540-36-3	1,4-Difluorobenzene	935497	5.54				
3114-55-4	Chlorobenzene-d5	776224	9.71				
3855-82-1	1,4-Dichlorobenzene-d4	328061	12.49				

CHEMTECH 284 Sheffield Street, Mountainside, NJ 07092 Phone: 908 789 8900 Fax: 908 789 8922

Report of Analysis

Client:	LiRo Engineers, Inc.	Date Collected:	07/12/17
Project:	DDC OEGS - Cross Island Phase 2	Date Received:	07/13/17
Client Sample ID:	CI-SB1-0-2	SDG No.:	I4187
Lab Sample ID:	I4187-01	Matrix:	SOIL
Analytical Method:	SW8260	% Moisture:	4.5
Sample Wt/Vol:	5 Units: g	Final Vol:	5000 uL
Soil Aliquot Vol:	uL	Test:	VOCMS Group1
GC Column:	RTX-VMS ID : 0.18	Level :	LOW

File ID/Qc Batch:	Dilution:	Prep Date	Date Analyzed	Prep Batch ID
VF053627.D	1		07/14/17 18:10	VF071417

CAS Number	Parameter	Conc.	Qualifier	MDL	LOD	LOQ / CRQL	Units

U = Not Detected
LOQ = Limit of Quantitation
MDL = Method Detection Limit
LOD = Limit of Detection
E = Value Exceeds Calibration Range
Q = indicates LCS control criteria did not meet requirements
M = MS/MSD acceptance criteria did not meet requirements

J = Estimated Value
B = Analyte Found in Associated Method Blank
N = Presumptive Evidence of a Compound
* = Values outside of QC limits
D = Dilution
() = Laboratory InHouse Limit

CHEMTECH 284 Sheffield Street, Mountainside, NJ 07092 Phone: 908 789 8900 Fax: 908 789 8922

Report of Analysis

Client:	LiRo Engineers, Inc.	Date Collected:	07/12/17
Project:	DDC OEGS - Cross Island Phase 2	Date Received:	07/13/17
Client Sample ID:	CI-SB2-0-2	SDG No.:	I4187
Lab Sample ID:	I4187-02	Matrix:	SOIL
Level (low/med):	low	% Solid:	86.5

Cas	Parameter	Conc.	Qua.	DF	MDL	LOD	LOQ / CRQL	Units(Dry Weight)	Prep Date	Date Ana.	Ana Met.
7429-90-5	Aluminum	7700		1	0.823	1.22	4.9	mg/Kg	07/14/17 10:05	07/17/17 14:25	SW6010
7440-36-0	Antimony	0.612	UN	1	0.549	0.612	2.45	mg/Kg	07/14/17 10:05	07/17/17 14:25	SW6010
7440-38-2	Arsenic	11.5		1	0.245	0.245	0.98	mg/Kg	07/14/17 10:05	07/17/17 14:25	SW6010
7440-39-3	Barium	50.3		1	0.392	1.22	4.9	mg/Kg	07/14/17 10:05	07/17/17 14:25	SW6010
7440-41-7	Beryllium	0.29	J	1	0.059	0.073	0.294	mg/Kg	07/14/17 10:05	07/17/17 14:25	SW6010
7440-43-9	Cadmium	2.6		1	0.059	0.073	0.294	mg/Kg	07/14/17 10:05	07/17/17 14:25	SW6010
7440-70-2	Calcium	1920		1	1.05	24.5	98	mg/Kg	07/14/17 10:05	07/17/17 14:25	SW6010
7440-47-3	Chromium	13.5		1	0.122	0.122	0.49	mg/Kg	07/14/17 10:05	07/17/17 14:25	SW6010
7440-48-4	Cobalt	4.81		1	0.367	0.367	1.47	mg/Kg	07/14/17 10:05	07/17/17 14:25	SW6010
7440-50-8	Copper	28.2		1	0.245	0.245	0.98	mg/Kg	07/14/17 10:05	07/17/17 14:25	SW6010
7439-89-6	Iron	13400		1	1.22	1.22	4.9	mg/Kg	07/14/17 10:05	07/17/17 14:25	SW6010
7439-92-1	Lead	98.8		1	0.118	0.245	0.588	mg/Kg	07/14/17 10:05	07/17/17 14:25	SW6010
7439-95-4	Magnesium	1610		1	4.49	24.5	98	mg/Kg	07/14/17 10:05	07/17/17 14:25	SW6010
7439-96-5	Manganese	203		1	0.186	0.245	0.98	mg/Kg	07/14/17 10:05	07/17/17 14:25	SW6010
7439-97-6	Mercury	0.613		1	0.008	0.008	0.016	mg/Kg	07/17/17 12:53	07/18/17 10:01	SW7471A
7440-02-0	Nickel	15.2		1	0.451	0.49	1.96	mg/Kg	07/14/17 10:05	07/17/17 14:25	SW6010
7440-09-7	Potassium	318		1	3.43	24.5	98	mg/Kg	07/14/17 10:05	07/17/17 14:25	SW6010
7782-49-2	Selenium	5.19		1	0.245	0.245	0.98	mg/Kg	07/14/17 10:05	07/17/17 14:25	SW6010
7440-22-4	Silver	1.06		1	0.122	0.122	0.49	mg/Kg	07/14/17 10:05	07/17/17 14:25	SW6010
7440-23-5	Sodium	314		1	2.47	24.5	98	mg/Kg	07/14/17 10:05	07/17/17 14:25	SW6010
7440-28-0	Thallium	0.49	U	1	0.265	0.49	1.96	mg/Kg	07/14/17 10:05	07/17/17 14:25	SW6010
7440-62-2	Vanadium	19.2		1	0.49	0.49	1.96	mg/Kg	07/14/17 10:05	07/17/17 14:25	SW6010
7440-66-6	Zinc	86.7		1	0.49	0.49	1.96	mg/Kg	07/14/17 10:05	07/17/17 14:25	SW6010

Color Before:	Brown	Clarity Before:		Texture:	Medium
Color After:	Yellow	Clarity After:		Artifacts:	No
Comments:	METALS-TAL				

U = Not Detected
LOQ = Limit of Quantitation
MDL = Method Detection Limit
LOD = Limit of Detection
D = Dilution
Q = indicates LCS control criteria did not meet requirements

J = Estimated Value
B = Analyte Found in Associated Method Blank
* = indicates the duplicate analysis is not within control limits.
E = Indicates the reported value is estimated because of the presence of interference.
OR = Over Range
N =Spiked sample recovery not within control limits

CHEMTECH 284 Sheffield Street, Mountainside, NJ 07092 Phone: 908 789 8900 Fax: 908 789 8922

Report of Analysis

Client:	LiRo Engineers, Inc.	Date Collected:	07/12/17
Project:	DDC OEGS - Cross Island Phase 2	Date Received:	07/13/17
Client Sample ID:	CI-SB2-0-2	SDG No.:	I4187
Lab Sample ID:	I4187-02	Matrix:	SOIL
Analytical Method:	SW8082A	% Moisture:	13.5 Decanted:
Sample Wt/Vol:	30.04 Units: g	Final Vol:	10000 uL
Soil Aliquot Vol:	uL	Test:	PCB
Extraction Type:		Injection Volume :	
GPC Factor :	1.0 PH :		

File ID/Qc Batch:	Dilution:	Prep Date	Date Analyzed	Prep Batch ID
PQ019423.D	1	07/14/17 10:55	07/18/17 15:50	PB100661

CAS Number	Parameter	Conc.	Qualifier	MDL	LOD	LOQ / CRQL	Units(Dry Weight)
TARGETS							
12674-11-2	Aroclor-1016	3.8	U	3.8	3.8	19.6	ug/kg
11104-28-2	Aroclor-1221	3.8	U	3.8	3.8	19.6	ug/kg
11141-16-5	Aroclor-1232	3.8	U	3.8	3.8	19.6	ug/kg
53469-21-9	Aroclor-1242	3.8	U	3.8	3.8	19.6	ug/kg
12672-29-6	Aroclor-1248	3.8	U	3.8	3.8	19.6	ug/kg
11097-69-1	Aroclor-1254	3.8	U	1.7	3.8	19.6	ug/kg
37324-23-5	Aroclor-1262	3.8	U	3.8	3.8	19.6	ug/kg
11100-14-4	Aroclor-1268	3.8	U	3.8	3.8	19.6	ug/kg
11096-82-5	Aroclor-1260	3.8	U	3.8	3.8	19.6	ug/kg
SURROGATES							
877-09-8	Tetrachloro-m-xylene	20.7		10 - 166		103%	SPK: 20
2051-24-3	Decachlorobiphenyl	15.2		60 - 125		76%	SPK: 20

Comments:

U = Not Detected
LOQ = Limit of Quantitation
MDL = Method Detection Limit
LOD = Limit of Detection
E = Value Exceeds Calibration Range
P = Indicates >25% difference for detected concentrations between the two GC columns
Q = indicates LCS control criteria did not meet requirements
M = MS/MSD acceptance criteria did not meet requirements

J = Estimated Value
B = Analyte Found in Associated Method Blank
N = Presumptive Evidence of a Compound
* = Values outside of QC limits
D = Dilution
S = Indicates estimated value where valid five-point calibration was not performed prior to analyte detection in sample.
() = Laboratory InHouse Limit

CHEMTECH 284 Sheffield Street, Mountainside, NJ 07092 Phone: 908 789 8900 Fax: 908 789 8922

Report of Analysis

Client:	LiRo Engineers, Inc.	Date Collected:	07/12/17
Project:	DDC OEGS - Cross Island Phase 2	Date Received:	07/13/17
Client Sample ID:	CI-SB2-0-2	SDG No.:	I4187
Lab Sample ID:	I4187-02	Matrix:	SOIL
Analytical Method:	SW8081	% Moisture:	13.5 Decanted:
Sample Wt/Vol:	30.04 Units: g	Final Vol:	10000 uL
Soil Aliquot Vol:	uL	Test:	PESTICIDE Group1
Extraction Type:		Injection Volume :	
GPC Factor :	1.0 PH :		

File ID/Qc Batch:	Dilution:	Prep Date	Date Analyzed	Prep Batch ID
PL027273.D	1	07/14/17 08:10	07/14/17 17:52	PB100634

CAS Number	Parameter	Conc.	Qualifier	MDL	LOD	LOQ / CRQL	Units(Dry Weight)
TARGETS							
319-84-6	alpha-BHC	0.381	U	0.15	0.381	2	ug/kg
319-85-7	beta-BHC	0.381	U	0.208	0.381	2	ug/kg
319-86-8	delta-BHC	0.381	U	0.116	0.381	2	ug/kg
58-89-9	gamma-BHC (Lindane)	0.381	U	0.173	0.381	2	ug/kg
76-44-8	Heptachlor	0.381	U	0.162	0.381	2	ug/kg
309-00-2	Aldrin	0.381	U	0.116	0.381	2	ug/kg
1024-57-3	Heptachlor epoxide	0.381	U	0.185	0.381	2	ug/kg
959-98-8	Endosulfan I	0.381	U	0.173	0.381	2	ug/kg
60-57-1	Dieldrin	0.381	U	0.15	0.381	2	ug/kg
72-55-9	4,4-DDE	1.4	J	0.231	0.381	2	ug/kg
72-20-8	Endrin	0.381	U	0.208	0.381	2	ug/kg
33213-65-9	Endosulfan II	0.381	U	0.162	0.381	2	ug/kg
72-54-8	4,4-DDD	0.381	U	0.196	0.381	2	ug/kg
1031-07-8	Endosulfan Sulfate	0.381	U	0.173	0.381	2	ug/kg
50-29-3	4,4-DDT	2.4	P	0.162	0.381	2	ug/kg
72-43-5	Methoxychlor	0.381	U	0.196	0.381	2	ug/kg
53494-70-5	Endrin ketone	0.381	U	0.15	0.381	2	ug/kg
7421-93-4	Endrin aldehyde	0.381	U	0.173	0.381	2	ug/kg
5103-71-9	alpha-Chlordane	0.381	U	0.162	0.381	2	ug/kg
5103-74-2	gamma-Chlordane	0.381	U	0.15	0.381	2	ug/kg
8001-35-2	Toxaphene	3.8	U	3.8	3.8	19.6	ug/kg
SURROGATES							
2051-24-3	Decachlorobiphenyl	14.1		10 - 169		71%	SPK: 20
877-09-8	Tetrachloro-m-xylene	12.8		31 - 151		64%	SPK: 20

CHEMTECH 284 Sheffield Street, Mountainside, NJ 07092 Phone: 908 789 8900 Fax: 908 789 8922

Report of Analysis

Client:	LiRo Engineers, Inc.	Date Collected:	07/12/17
Project:	DDC OEGS - Cross Island Phase 2	Date Received:	07/13/17
Client Sample ID:	CI-SB2-0-2	SDG No.:	I4187
Lab Sample ID:	I4187-02	Matrix:	SOIL
Analytical Method:	SW8081	% Moisture:	13.5 Decanted:
Sample Wt/Vol:	30.04 Units: g	Final Vol:	10000 uL
Soil Aliquot Vol:	uL	Test:	PESTICIDE Group1
Extraction Type:		Injection Volume :	
GPC Factor :	1.0 PH :		

File ID/Qc Batch:	Dilution:	Prep Date	Date Analyzed	Prep Batch ID
PL027273.D	1	07/14/17 08:10	07/14/17 17:52	PB100634

CAS Number	Parameter	Conc.	Qualifier	MDL	LOD	LOQ / CRQL	Units

Comments:

U = Not Detected
LOQ = Limit of Quantitation
MDL = Method Detection Limit
LOD = Limit of Detection
E = Value Exceeds Calibration Range
P = Indicates >25% difference for detected concentrations between the two GC columns
Q = indicates LCS control criteria did not meet requirements
M = MS/MSD acceptance criteria did not meet requirements

J = Estimated Value
B = Analyte Found in Associated Method Blank
N = Presumptive Evidence of a Compound
* = Values outside of QC limits
D = Dilution
S = Indicates estimated value where valid five-point calibration was not performed prior to analyte detection in sample.
() = Laboratory InHouse Limit

CHEMTECH 284 Sheffield Street, Mountainside, NJ 07092 Phone: 908 789 8900 Fax: 908 789 8922

Report of Analysis

Client:	LiRo Engineers, Inc.	Date Collected:	07/12/17
Project:	DDC OEGS - Cross Island Phase 2	Date Received:	07/13/17
Client Sample ID:	CI-SB2-0-2	SDG No.:	I4187
Lab Sample ID:	I4187-02	Matrix:	SOIL
Analytical Method:	SW8270	% Moisture:	13.5
Sample Wt/Vol:	30.04 Units: g	Final Vol:	1000 uL
Soil Aliquot Vol:	uL	Test:	SVOCMS Group1
Extraction Type :	Decanted : N	Level :	LOW
Injection Volume :	GPC Factor : 1.0	GPC Cleanup :	N PH :

File ID/Qc Batch:	Dilution:	Prep Date	Date Analyzed	Prep Batch ID
BF096792.D	1	07/14/17 09:53	07/15/17 00:51	PB100644

CAS Number	Parameter	Conc.	Qualifier	MDL	LOD	LOQ / CRQL	Units(Dry Weight)
TARGETS							
100-52-7	Benzaldehyde	38.5	U	20.1	38.5	380	ug/Kg
108-95-2	Phenol	38.5	U	8.9	38.5	380	ug/Kg
111-44-4	bis(2-Chloroethyl)ether	38.5	U	18.5	38.5	380	ug/Kg
95-57-8	2-Chlorophenol	38.5	U	20.3	38.5	380	ug/Kg
95-48-7	2-Methylphenol	38.5	U	20.9	38.5	380	ug/Kg
108-60-1	2,2-oxybis(1-Chloropropane)	38.5	U	15.9	38.5	380	ug/Kg
98-86-2	Acetophenone	38.5	U	11.8	38.5	380	ug/Kg
65794-96-9	3+4-Methylphenols	38.5	U	20	38.5	380	ug/Kg
621-64-7	n-Nitroso-di-n-propylamine	38.5	U	19.4	38.5	380	ug/Kg
67-72-1	Hexachloroethane	38.5	U	17.2	38.5	380	ug/Kg
98-95-3	Nitrobenzene	38.5	U	14.5	38.5	380	ug/Kg
78-59-1	Isophorone	38.5	U	12.7	38.5	380	ug/Kg
88-75-5	2-Nitrophenol	38.5	U	18.6	38.5	380	ug/Kg
105-67-9	2,4-Dimethylphenol	38.5	U	21.8	38.5	380	ug/Kg
111-91-1	bis(2-Chloroethoxy)methane	38.5	U	22.2	38.5	380	ug/Kg
120-83-2	2,4-Dichlorophenol	38.5	U	14.7	38.5	380	ug/Kg
91-20-3	Naphthalene	38.5	U	13.3	38.5	380	ug/Kg
106-47-8	4-Chloroaniline	38.5	U	27.1	38.5	380	ug/Kg
87-68-3	Hexachlorobutadiene	38.5	U	14	38.5	380	ug/Kg
105-60-2	Caprolactam	77	U	17.9	77	380	ug/Kg
59-50-7	4-Chloro-3-methylphenol	38.5	U	17.1	38.5	380	ug/Kg
91-57-6	2-Methylnaphthalene	38.5	U	9.7	38.5	380	ug/Kg
77-47-4	Hexachlorocyclopentadiene	38.5	U	9.4	38.5	380	ug/Kg
88-06-2	2,4,6-Trichlorophenol	38.5	U	11.8	38.5	380	ug/Kg
95-95-4	2,4,5-Trichlorophenol	38.5	U	27	38.5	380	ug/Kg
92-52-4	1,1-Biphenyl	38.5	U	14.5	38.5	380	ug/Kg
91-58-7	2-Chloronaphthalene	38.5	U	8.8	38.5	380	ug/Kg
88-74-4	2-Nitroaniline	38.5	U	17.1	38.5	380	ug/Kg
131-11-3	Dimethylphthalate	250	J	10.4	38.5	380	ug/Kg
208-96-8	Acenaphthylene	38.5	U	9.7	38.5	380	ug/Kg
606-20-2	2,6-Dinitrotoluene	38.5	U	15.7	38.5	380	ug/Kg

CHEMTECH 284 Sheffield Street, Mountainside, NJ 07092 Phone: 908 789 8900 Fax: 908 789 8922

Report of Analysis

Client:	LiRo Engineers, Inc.	Date Collected:	07/12/17
Project:	DDC OEGS - Cross Island Phase 2	Date Received:	07/13/17
Client Sample ID:	CI-SB2-0-2	SDG No.:	I4187
Lab Sample ID:	I4187-02	Matrix:	SOIL
Analytical Method:	SW8270	% Moisture:	13.5
Sample Wt/Vol:	30.04 Units: g	Final Vol:	1000 uL
Soil Aliquot Vol:	uL	Test:	SVOCMS Group1
Extraction Type :	Decanted : N	Level :	LOW
Injection Volume :	GPC Factor : 1.0	GPC Cleanup :	N PH :

File ID/Qc Batch:	Dilution:	Prep Date	Date Analyzed	Prep Batch ID
BF096792.D	1	07/14/17 09:53	07/15/17 00:51	PB100644

CAS Number	Parameter	Conc.	Qualifier	MDL	LOD	LOQ / CRQL	Units(Dry Weight)
99-09-2	3-Nitroaniline	77	U	24.7	77	380	ug/Kg
83-32-9	Acenaphthene	38.5	U	10.9	38.5	380	ug/Kg
51-28-5	2,4-Dinitrophenol	310	U	39.1	310	380	ug/Kg
100-02-7	4-Nitrophenol	190	U	71.5	190	380	ug/Kg
132-64-9	Dibenzofuran	38.5	U	15	38.5	380	ug/Kg
121-14-2	2,4-Dinitrotoluene	38.5	U	11.5	38.5	380	ug/Kg
84-66-2	Diethylphthalate	38.5	U	6	38.5	380	ug/Kg
7005-72-3	4-Chlorophenyl-phenylether	38.5	U	20.9	38.5	380	ug/Kg
86-73-7	Fluorene	38.5	U	14.5	38.5	380	ug/Kg
100-01-6	4-Nitroaniline	77	UQ	50.1	77	380	ug/Kg
534-52-1	4,6-Dinitro-2-methylphenol	190	U	22.1	190	380	ug/Kg
86-30-6	n-Nitrosodiphenylamine	38.5	U	9.2	38.5	380	ug/Kg
101-55-3	4-Bromophenyl-phenylether	38.5	U	7.5	38.5	380	ug/Kg
118-74-1	Hexachlorobenzene	38.5	U	15.7	38.5	380	ug/Kg
1912-24-9	Atrazine	38.5	U	20.3	38.5	380	ug/Kg
87-86-5	Pentachlorophenol	38.5	U	26.3	38.5	380	ug/Kg
85-01-8	Phenanthrene	99.7	J	10.4	38.5	380	ug/Kg
120-12-7	Anthracene	38.5	U	7.9	38.5	380	ug/Kg
86-74-8	Carbazole	38.5	U	8.4	38.5	380	ug/Kg
84-74-2	Di-n-butylphthalate	38.5	U	30.2	38.5	380	ug/Kg
206-44-0	Fluoranthene	230	J	7.7	38.5	380	ug/Kg
129-00-0	Pyrene	170	J	9.2	38.5	380	ug/Kg
85-68-7	Butylbenzylphthalate	78.8	JQ	18.5	38.5	380	ug/Kg
91-94-1	3,3-Dichlorobenzidine	38.5	U	24.7	38.5	380	ug/Kg
56-55-3	Benzo(a)anthracene	110	J	18.4	38.5	380	ug/Kg
218-01-9	Chrysene	130	J	17.4	38.5	380	ug/Kg
117-81-7	Bis(2-ethylhexyl)phthalate	83.9	J	13.6	38.5	380	ug/Kg
117-84-0	Di-n-octyl phthalate	38.5	U	4.4	38.5	380	ug/Kg
205-99-2	Benzo(b)fluoranthene	210	J	12.6	38.5	380	ug/Kg
207-08-9	Benzo(k)fluoranthene	38.5	U	18.1	38.5	380	ug/Kg
50-32-8	Benzo(a)pyrene	140	J	8.3	38.5	380	ug/Kg
193-39-5	Indeno(1,2,3-cd)pyrene	210	J	12.8	38.5	380	ug/Kg
53-70-3	Dibenzo(a,h)anthracene	38.5	U	11.1	38.5	380	ug/Kg

CHEMTECH 284 Sheffield Street, Mountainside, NJ 07092 Phone: 908 789 8900 Fax: 908 789 8922

Report of Analysis

Client:	LiRo Engineers, Inc.	Date Collected:	07/12/17
Project:	DDC OEGS - Cross Island Phase 2	Date Received:	07/13/17
Client Sample ID:	CI-SB2-0-2	SDG No.:	I4187
Lab Sample ID:	I4187-02	Matrix:	SOIL
Analytical Method:	SW8270	% Moisture:	13.5
Sample Wt/Vol:	30.04 Units: g	Final Vol:	1000 uL
Soil Aliquot Vol:	uL	Test:	SVOCMS Group1
Extraction Type :	Decanted : N	Level :	LOW
Injection Volume :	GPC Factor : 1.0	GPC Cleanup :	N PH :

File ID/Qc Batch:	Dilution:	Prep Date	Date Analyzed	Prep Batch ID
BF096792.D	1	07/14/17 09:53	07/15/17 00:51	PB100644

CAS Number	Parameter	Conc.	Qualifier	MDL	LOD	LOQ / CRQL	Units(Dry Weight)
191-24-2	Benzo(g,h,i)perylene	97.2	J	15.6	38.5	380	ug/Kg
95-94-3	1,2,4,5-Tetrachlorobenzene	38.5	U	15.1	38.5	380	ug/Kg
123-91-1	1,4-Dioxane	77	U	15.1	77	380	ug/Kg
58-90-2	2,3,4,6-Tetrachlorophenol	38.5	U	15.1	38.5	380	ug/Kg
SURROGATES							
367-12-4	2-Fluorophenol	110		28 - 127		71%	SPK: 150
13127-88-3	Phenol-d6	110		34 - 127		71%	SPK: 150
4165-60-0	Nitrobenzene-d5	65		31 - 132		65%	SPK: 100
321-60-8	2-Fluorobiphenyl	70.6		39 - 123		71%	SPK: 100
118-79-6	2,4,6-Tribromophenol	91.4		30 - 133		61%	SPK: 150
1718-51-0	Terphenyl-d14	43.1		37 - 115		43%	SPK: 100
INTERNAL STANDARDS							
3855-82-1	1,4-Dichlorobenzene-d4	99025	6.62				
1146-65-2	Naphthalene-d8	399904	7.9				
15067-26-2	Acenaphthene-d10	165283	9.65				
1517-22-2	Phenanthrene-d10	267442	11.13				
1719-03-5	Chrysene-d12	184656	13.76				
1520-96-3	Perylene-d12	184381	15.14				

U = Not Detected
LOQ = Limit of Quantitation
MDL = Method Detection Limit
LOD = Limit of Detection
E = Value Exceeds Calibration Range
Q = indicates LCS control criteria did not meet requirements
M = MS/MSD acceptance criteria did not meet requirements

J = Estimated Value
B = Analyte Found in Associated Method Blank
N = Presumptive Evidence of a Compound
* = Values outside of QC limits
D = Dilution
() = Laboratory InHouse Limit

CHEMTECH 284 Sheffield Street, Mountainside, NJ 07092 Phone: 908 789 8900 Fax: 908 789 8922

Report of Analysis

Client:	LiRo Engineers, Inc.	Date Collected:	07/12/17
Project:	DDC OEGS - Cross Island Phase 2	Date Received:	07/13/17
Client Sample ID:	CI-SB2-0-2	SDG No.:	I4187
Lab Sample ID:	I4187-02	Matrix:	SOIL
Analytical Method:	SW8260	% Moisture:	13.5
Sample Wt/Vol:	5.01 Units: g	Final Vol:	5000 uL
Soil Aliquot Vol:	uL	Test:	VOCMS Group1
GC Column:	RTX-VMS ID : 0.18	Level :	LOW

File ID/Qc Batch:	Dilution:	Prep Date	Date Analyzed	Prep Batch ID
VF053628.D	1		07/14/17 18:39	VF071417

CAS Number	Parameter	Conc.	Qualifier	MDL	LOD	LOQ / CRQL	Units(Dry Weight)
TARGETS							
75-71-8	Dichlorodifluoromethane	0.58	U	0.58	0.58	5.8	ug/Kg
74-87-3	Chloromethane	0.58	U	0.58	0.58	5.8	ug/Kg
75-01-4	Vinyl Chloride	0.58	U	0.58	0.58	5.8	ug/Kg
74-83-9	Bromomethane	1.2	U	1.2	1.2	5.8	ug/Kg
75-00-3	Chloroethane	0.58	U	0.58	0.58	5.8	ug/Kg
75-69-4	Trichlorofluoromethane	0.58	UQ	0.58	0.58	5.8	ug/Kg
76-13-1	1,1,2-Trichlorotrifluoroethane	0.58	U	0.58	0.58	5.8	ug/Kg
75-65-0	Tert butyl alcohol	28.8	U	8.5	28.8	28.8	ug/Kg
75-35-4	1,1-Dichloroethene	0.58	UQ	0.58	0.58	5.8	ug/Kg
67-64-1	Acetone	2.9	U	2.9	2.9	28.8	ug/Kg
75-15-0	Carbon Disulfide	0.58	U	0.58	0.58	5.8	ug/Kg
1634-04-4	Methyl tert-butyl Ether	0.58	UQ	0.58	0.58	5.8	ug/Kg
79-20-9	Methyl Acetate	1.2	U	1.2	1.2	5.8	ug/Kg
75-09-2	Methylene Chloride	2.6	J	0.58	0.58	5.8	ug/Kg
156-60-5	trans-1,2-Dichloroethene	0.58	UQ	0.58	0.58	5.8	ug/Kg
75-34-3	1,1-Dichloroethane	0.58	UQ	0.58	0.58	5.8	ug/Kg
110-82-7	Cyclohexane	0.58	U	0.58	0.58	5.8	ug/Kg
78-93-3	2-Butanone	8.7	U	3.6	8.7	28.8	ug/Kg
56-23-5	Carbon Tetrachloride	0.58	U	0.58	0.58	5.8	ug/Kg
156-59-2	cis-1,2-Dichloroethene	0.58	U	0.58	0.58	5.8	ug/Kg
74-97-5	Bromochloromethane	0.58	U	0.58	0.58	5.8	ug/Kg
67-66-3	Chloroform	0.58	UQ	0.58	0.58	5.8	ug/Kg
71-55-6	1,1,1-Trichloroethane	0.58	U	0.58	0.58	5.8	ug/Kg
108-87-2	Methylcyclohexane	0.58	U	0.58	0.58	5.8	ug/Kg
71-43-2	Benzene	0.58	U	0.44	0.58	5.8	ug/Kg
107-06-2	1,2-Dichloroethane	0.58	UQ	0.58	0.58	5.8	ug/Kg
79-01-6	Trichloroethene	0.58	U	0.58	0.58	5.8	ug/Kg
78-87-5	1,2-Dichloropropane	0.58	U	0.3	0.58	5.8	ug/Kg
5-27-4	Bromodichloromethane	0.58	U	0.58	0.58	5.8	ug/Kg
108-10-1	4-Methyl-2-Pentanone	2.9	U	2.9	2.9	28.8	ug/Kg
108-88-3	Toluene	0.58	U	0.58	0.58	5.8	ug/Kg
10061-02-6	t-1,3-Dichloropropene	0.58	U	0.58	0.58	5.8	ug/Kg

CHEMTECH 284 Sheffield Street, Mountainside, NJ 07092 Phone: 908 789 8900 Fax: 908 789 8922

Report of Analysis

Client:	LiRo Engineers, Inc.	Date Collected:	07/12/17
Project:	DDC OEGS - Cross Island Phase 2	Date Received:	07/13/17
Client Sample ID:	CI-SB2-0-2	SDG No.:	I4187
Lab Sample ID:	I4187-02	Matrix:	SOIL
Analytical Method:	SW8260	% Moisture:	13.5
Sample Wt/Vol:	5.01 Units: g	Final Vol:	5000 uL
Soil Aliquot Vol:	uL	Test:	VOCMS Group1
GC Column:	RTX-VMS ID : 0.18	Level :	LOW

File ID/Qc Batch:	Dilution:	Prep Date	Date Analyzed	Prep Batch ID
VF053628.D	1		07/14/17 18:39	VF071417

CAS Number	Parameter	Conc.	Qualifier	MDL	LOD	LOQ / CRQL	Units(Dry Weight)
10061-01-5	cis-1,3-Dichloropropene	0.58	U	0.58	0.58	5.8	ug/Kg
79-00-5	1,1,2-Trichloroethane	1.2	U	1	1.2	5.8	ug/Kg
591-78-6	2-Hexanone	2.9	U	2.9	2.9	28.8	ug/Kg
124-48-1	Dibromochloromethane	0.58	U	0.58	0.58	5.8	ug/Kg
106-93-4	1,2-Dibromoethane	0.58	U	0.58	0.58	5.8	ug/Kg
127-18-4	Tetrachloroethene	0.58	U	0.58	0.58	5.8	ug/Kg
108-90-7	Chlorobenzene	0.58	U	0.58	0.58	5.8	ug/Kg
100-41-4	Ethyl Benzene	0.58	U	0.58	0.58	5.8	ug/Kg
179601-23-1	m/p-Xylenes	1.2	U	0.83	1.2	11.5	ug/Kg
95-47-6	o-Xylene	0.58	U	0.58	0.58	5.8	ug/Kg
100-42-5	Styrene	0.58	U	0.52	0.58	5.8	ug/Kg
75-25-2	Bromoform	1.7	U	0.85	1.7	5.8	ug/Kg
98-82-8	Isopropylbenzene	0.58	U	0.55	0.58	5.8	ug/Kg
79-34-5	1,1,2,2-Tetrachloroethane	0.58	U	0.53	0.58	5.8	ug/Kg
541-73-1	1,3-Dichlorobenzene	0.58	U	0.43	0.58	5.8	ug/Kg
106-46-7	1,4-Dichlorobenzene	0.58	U	0.47	0.58	5.8	ug/Kg
95-50-1	1,2-Dichlorobenzene	0.58	U	0.58	0.58	5.8	ug/Kg
96-12-8	1,2-Dibromo-3-Chloropropane	5.8	U	1	5.8	5.8	ug/Kg
120-82-1	1,2,4-Trichlorobenzene	0.58	U	0.58	0.58	5.8	ug/Kg
87-61-6	1,2,3-Trichlorobenzene	1.2	U	0.58	1.2	5.8	ug/Kg
SURROGATES							
17060-07-0	1,2-Dichloroethane-d4	34.8		56 - 120		70%	SPK: 50
1868-53-7	Dibromofluoromethane	42		57 - 135		84%	SPK: 50
2037-26-5	Toluene-d8	38		67 - 123		76%	SPK: 50
460-00-4	4-Bromofluorobenzene	30		33 - 141		60%	SPK: 50
INTERNAL STANDARDS							
363-72-4	Pentafluorobenzene	425849	4.82				
540-36-3	1,4-Difluorobenzene	838793	5.54				
3114-55-4	Chlorobenzene-d5	636476	9.71				
3855-82-1	1,4-Dichlorobenzene-d4	243883	12.49				

CHEMTECH 284 Sheffield Street, Mountainside, NJ 07092 Phone: 908 789 8900 Fax: 908 789 8922

Report of Analysis

Client:	LiRo Engineers, Inc.	Date Collected:	07/12/17
Project:	DDC OEGS - Cross Island Phase 2	Date Received:	07/13/17
Client Sample ID:	CI-SB2-0-2	SDG No.:	I4187
Lab Sample ID:	I4187-02	Matrix:	SOIL
Analytical Method:	SW8260	% Moisture:	13.5
Sample Wt/Vol:	5.01 Units: g	Final Vol:	5000 uL
Soil Aliquot Vol:	uL	Test:	VOCMS Group1
GC Column:	RTX-VMS ID : 0.18	Level :	LOW

File ID/Qc Batch:	Dilution:	Prep Date	Date Analyzed	Prep Batch ID
VF053628.D	1		07/14/17 18:39	VF071417

CAS Number	Parameter	Conc.	Qualifier	MDL	LOD	LOQ / CRQL	Units

U = Not Detected
LOQ = Limit of Quantitation
MDL = Method Detection Limit
LOD = Limit of Detection
E = Value Exceeds Calibration Range
Q = indicates LCS control criteria did not meet requirements
M = MS/MSD acceptance criteria did not meet requirements

J = Estimated Value
B = Analyte Found in Associated Method Blank
N = Presumptive Evidence of a Compound
* = Values outside of QC limits
D = Dilution
() = Laboratory InHouse Limit

CHEMTECH 284 Sheffield Street, Mountainside, NJ 07092 Phone: 908 789 8900 Fax: 908 789 8922

Report of Analysis

Client:	LiRo Engineers, Inc.	Date Collected:	07/12/17
Project:	DDC OEGS - Cross Island Phase 2	Date Received:	07/13/17
Client Sample ID:	CI-SB3-0-2	SDG No.:	I4187
Lab Sample ID:	I4187-03	Matrix:	SOIL
Level (low/med):	low	% Solid:	90.5

Cas	Parameter	Conc.	Qua.	DF	MDL	LOD	LOQ / CRQL	Units(Dry Weight)	Prep Date	Date Ana.	Ana Met.
7429-90-5	Aluminum	7840		1	0.764	1.14	4.55	mg/Kg	07/14/17 10:05	07/17/17 14:45	SW6010
7440-36-0	Antimony	0.568	UN	1	0.509	0.568	2.27	mg/Kg	07/14/17 10:05	07/17/17 14:45	SW6010
7440-38-2	Arsenic	7.39		1	0.227	0.227	0.909	mg/Kg	07/14/17 10:05	07/17/17 14:45	SW6010
7440-39-3	Barium	46.1		1	0.364	1.14	4.55	mg/Kg	07/14/17 10:05	07/17/17 14:45	SW6010
7440-41-7	Beryllium	0.316		1	0.055	0.068	0.273	mg/Kg	07/14/17 10:05	07/17/17 14:45	SW6010
7440-43-9	Cadmium	0.595		1	0.055	0.068	0.273	mg/Kg	07/14/17 10:05	07/17/17 14:45	SW6010
7440-70-2	Calcium	1690		1	0.973	22.7	90.9	mg/Kg	07/14/17 10:05	07/17/17 14:45	SW6010
7440-47-3	Chromium	16.4		1	0.114	0.114	0.455	mg/Kg	07/14/17 10:05	07/17/17 14:45	SW6010
7440-48-4	Cobalt	4.91		1	0.341	0.341	1.36	mg/Kg	07/14/17 10:05	07/17/17 14:45	SW6010
7440-50-8	Copper	32.7		1	0.227	0.227	0.909	mg/Kg	07/14/17 10:05	07/17/17 14:45	SW6010
7439-89-6	Iron	15400		1	1.14	1.14	4.55	mg/Kg	07/14/17 10:05	07/17/17 14:45	SW6010
7439-92-1	Lead	113		1	0.109	0.227	0.546	mg/Kg	07/14/17 10:05	07/17/17 14:45	SW6010
7439-95-4	Magnesium	1330		1	4.17	22.7	90.9	mg/Kg	07/14/17 10:05	07/17/17 14:45	SW6010
7439-96-5	Manganese	233		1	0.173	0.227	0.909	mg/Kg	07/14/17 10:05	07/17/17 14:45	SW6010
7439-97-6	Mercury	0.486		1	0.006	0.006	0.013	mg/Kg	07/17/17 12:53	07/18/17 10:08	SW7471A
7440-02-0	Nickel	22.2		1	0.418	0.455	1.82	mg/Kg	07/14/17 10:05	07/17/17 14:45	SW6010
7440-09-7	Potassium	244		1	3.18	22.7	90.9	mg/Kg	07/14/17 10:05	07/17/17 14:45	SW6010
7782-49-2	Selenium	5.97		1	0.227	0.227	0.909	mg/Kg	07/14/17 10:05	07/17/17 14:45	SW6010
7440-22-4	Silver	1.22		1	0.114	0.114	0.455	mg/Kg	07/14/17 10:05	07/17/17 14:45	SW6010
7440-23-5	Sodium	147		1	2.29	22.7	90.9	mg/Kg	07/14/17 10:05	07/17/17 14:45	SW6010
7440-28-0	Thallium	0.455	U	1	0.246	0.455	1.82	mg/Kg	07/14/17 10:05	07/17/17 14:45	SW6010
7440-62-2	Vanadium	22.1		1	0.455	0.455	1.82	mg/Kg	07/14/17 10:05	07/17/17 14:45	SW6010
7440-66-6	Zinc	63.4		1	0.455	0.455	1.82	mg/Kg	07/14/17 10:05	07/17/17 14:45	SW6010

Color Before:	Brown	Clarity Before:		Texture:	Medium
Color After:	Yellow	Clarity After:		Artifacts:	No
Comments:	METALS-TAL				

U = Not Detected
LOQ = Limit of Quantitation
MDL = Method Detection Limit
LOD = Limit of Detection
D = Dilution
Q = indicates LCS control criteria did not meet requirements

J = Estimated Value
B = Analyte Found in Associated Method Blank
* = indicates the duplicate analysis is not within control limits.
E = Indicates the reported value is estimated because of the presence of interference.
OR = Over Range
N =Spiked sample recovery not within control limits

CHEMTECH 284 Sheffield Street, Mountainside, NJ 07092 Phone: 908 789 8900 Fax: 908 789 8922

Report of Analysis

Client:	LiRo Engineers, Inc.	Date Collected:	07/12/17
Project:	DDC OEGS - Cross Island Phase 2	Date Received:	07/13/17
Client Sample ID:	CI-SB3-0-2	SDG No.:	I4187
Lab Sample ID:	I4187-03	Matrix:	SOIL
Analytical Method:	SW8082A	% Moisture:	9.5 Decanted:
Sample Wt/Vol:	30.1 Units: g	Final Vol:	10000 uL
Soil Aliquot Vol:	uL	Test:	PCB
Extraction Type:		Injection Volume :	
GPC Factor :	1.0 PH :		

File ID/Qc Batch:	Dilution:	Prep Date	Date Analyzed	Prep Batch ID
PQ019463.D	1	07/14/17 10:55	07/20/17 10:42	PB100661

CAS Number	Parameter	Conc.	Qualifier	MDL	LOD	LOQ / CRQL	Units(Dry Weight)
TARGETS							
12674-11-2	Aroclor-1016	3.7	U	3.7	3.7	18.7	ug/kg
11104-28-2	Aroclor-1221	3.7	U	3.7	3.7	18.7	ug/kg
11141-16-5	Aroclor-1232	3.7	U	3.7	3.7	18.7	ug/kg
53469-21-9	Aroclor-1242	3.7	U	3.7	3.7	18.7	ug/kg
12672-29-6	Aroclor-1248	3.7	U	3.7	3.7	18.7	ug/kg
11097-69-1	Aroclor-1254	150		1.6	3.7	18.7	ug/kg
37324-23-5	Aroclor-1262	3.7	U	3.7	3.7	18.7	ug/kg
11100-14-4	Aroclor-1268	3.7	U	3.7	3.7	18.7	ug/kg
11096-82-5	Aroclor-1260	3.7	U	3.7	3.7	18.7	ug/kg
SURROGATES							
877-09-8	Tetrachloro-m-xylene	17.2		10 - 166		85%	SPK: 20
2051-24-3	Decachlorobiphenyl	14.6		60 - 125		73%	SPK: 20

Comments:

U = Not Detected
LOQ = Limit of Quantitation
MDL = Method Detection Limit
LOD = Limit of Detection
E = Value Exceeds Calibration Range
P = Indicates >25% difference for detected concentrations between the two GC columns
Q = indicates LCS control criteria did not meet requirements
M = MS/MSD acceptance criteria did not meet requirements

J = Estimated Value
B = Analyte Found in Associated Method Blank
N = Presumptive Evidence of a Compound
* = Values outside of QC limits
D = Dilution
S = Indicates estimated value where valid five-point calibration was not performed prior to analyte detection in sample.
() = Laboratory InHouse Limit

CHEMTECH 284 Sheffield Street, Mountainside, NJ 07092 Phone: 908 789 8900 Fax: 908 789 8922

Report of Analysis

Client:	LiRo Engineers, Inc.	Date Collected:	07/12/17
Project:	DDC OEGS - Cross Island Phase 2	Date Received:	07/13/17
Client Sample ID:	CI-SB3-0-2	SDG No.:	I4187
Lab Sample ID:	I4187-03	Matrix:	SOIL
Analytical Method:	SW8081	% Moisture:	9.5 Decanted:
Sample Wt/Vol:	30.1 Units: g	Final Vol:	10000 uL
Soil Aliquot Vol:	uL	Test:	PESTICIDE Group1
Extraction Type:		Injection Volume :	
GPC Factor :	1.0 PH :		

File ID/Qc Batch:	Dilution:	Prep Date	Date Analyzed	Prep Batch ID
PL027274.D	1	07/14/17 08:10	07/14/17 18:07	PB100634

CAS Number	Parameter	Conc.	Qualifier	MDL	LOD	LOQ / CRQL	Units(Dry Weight)
TARGETS							
319-84-6	alpha-BHC	0.363	U	0.143	0.363	1.9	ug/kg
319-85-7	beta-BHC	0.363	U	0.198	0.363	1.9	ug/kg
319-86-8	delta-BHC	0.363	U	0.11	0.363	1.9	ug/kg
58-89-9	gamma-BHC (Lindane)	0.363	U	0.165	0.363	1.9	ug/kg
76-44-8	Heptachlor	0.363	U	0.154	0.363	1.9	ug/kg
309-00-2	Aldrin	0.363	U	0.11	0.363	1.9	ug/kg
1024-57-3	Heptachlor epoxide	0.363	U	0.176	0.363	1.9	ug/kg
959-98-8	Endosulfan I	0.363	U	0.165	0.363	1.9	ug/kg
60-57-1	Dieldrin	0.363	U	0.143	0.363	1.9	ug/kg
72-55-9	4,4-DDE	4.2	P	0.22	0.363	1.9	ug/kg
72-20-8	Endrin	0.363	U	0.198	0.363	1.9	ug/kg
33213-65-9	Endosulfan II	0.363	U	0.154	0.363	1.9	ug/kg
72-54-8	4,4-DDD	0.363	U	0.187	0.363	1.9	ug/kg
1031-07-8	Endosulfan Sulfate	0.363	U	0.165	0.363	1.9	ug/kg
50-29-3	4,4-DDT	9	P	0.154	0.363	1.9	ug/kg
72-43-5	Methoxychlor	0.363	U	0.187	0.363	1.9	ug/kg
53494-70-5	Endrin ketone	0.363	U	0.143	0.363	1.9	ug/kg
7421-93-4	Endrin aldehyde	0.363	U	0.165	0.363	1.9	ug/kg
5103-71-9	alpha-Chlordane	22.4	P	0.154	0.363	1.9	ug/kg
5103-74-2	gamma-Chlordane	0.363	U	0.143	0.363	1.9	ug/kg
8001-35-2	Toxaphene	3.7	U	3.7	3.7	18.7	ug/kg
SURROGATES							
2051-24-3	Decachlorobiphenyl	11		10 - 169		50%	SPK: 20
877-09-8	Tetrachloro-m-xylene	9.95		31 - 151		49%	SPK: 20

CHEMTECH 284 Sheffield Street, Mountainside, NJ 07092 Phone: 908 789 8900 Fax: 908 789 8922

Report of Analysis

Client:	LiRo Engineers, Inc.	Date Collected:	07/12/17
Project:	DDC OEGS - Cross Island Phase 2	Date Received:	07/13/17
Client Sample ID:	CI-SB3-0-2	SDG No.:	I4187
Lab Sample ID:	I4187-03	Matrix:	SOIL
Analytical Method:	SW8081	% Moisture:	9.5 Decanted:
Sample Wt/Vol:	30.1 Units: g	Final Vol:	10000 uL
Soil Aliquot Vol:	uL	Test:	PESTICIDE Group1
Extraction Type:		Injection Volume :	
GPC Factor :	1.0 PH :		

File ID/Qc Batch:	Dilution:	Prep Date	Date Analyzed	Prep Batch ID
PL027274.D	1	07/14/17 08:10	07/14/17 18:07	PB100634

CAS Number	Parameter	Conc.	Qualifier	MDL	LOD	LOQ / CRQL	Units

Comments:

U = Not Detected
LOQ = Limit of Quantitation
MDL = Method Detection Limit
LOD = Limit of Detection
E = Value Exceeds Calibration Range
P = Indicates >25% difference for detected concentrations between the two GC columns
Q = indicates LCS control criteria did not meet requirements
M = MS/MSD acceptance criteria did not meet requirements

J = Estimated Value
B = Analyte Found in Associated Method Blank
N = Presumptive Evidence of a Compound
* = Values outside of QC limits
D = Dilution
S = Indicates estimated value where valid five-point calibration was not performed prior to analyte detection in sample.
() = Laboratory InHouse Limit

CHEMTECH 284 Sheffield Street, Mountainside, NJ 07092 Phone: 908 789 8900 Fax: 908 789 8922

Report of Analysis

Client:	LiRo Engineers, Inc.	Date Collected:	07/12/17
Project:	DDC OEGS - Cross Island Phase 2	Date Received:	07/13/17
Client Sample ID:	CI-SB3-0-2	SDG No.:	I4187
Lab Sample ID:	I4187-03	Matrix:	SOIL
Analytical Method:	SW8270	% Moisture:	9.5
Sample Wt/Vol:	30.04 Units: g	Final Vol:	1000 uL
Soil Aliquot Vol:	uL	Test:	SVOCMS Group1
Extraction Type :	Decanted : N	Level :	LOW
Injection Volume :	GPC Factor : 1.0	GPC Cleanup :	N PH :

File ID/Qc Batch:	Dilution:	Prep Date	Date Analyzed	Prep Batch ID
BF096793.D	1	07/14/17 09:53	07/15/17 01:19	PB100644

CAS Number	Parameter	Conc.	Qualifier	MDL	LOD	LOQ / CRQL	Units(Dry Weight)
TARGETS							
100-52-7	Benzaldehyde	36.8	U	19.2	36.8	360	ug/Kg
108-95-2	Phenol	36.8	U	8.5	36.8	360	ug/Kg
111-44-4	bis(2-Chloroethyl)ether	36.8	U	17.7	36.8	360	ug/Kg
95-57-8	2-Chlorophenol	36.8	U	19.4	36.8	360	ug/Kg
95-48-7	2-Methylphenol	36.8	U	20	36.8	360	ug/Kg
108-60-1	2,2-oxybis(1-Chloropropane)	36.8	U	15.2	36.8	360	ug/Kg
98-86-2	Acetophenone	36.8	U	11.3	36.8	360	ug/Kg
65794-96-9	3+4-Methylphenols	36.8	U	19.1	36.8	360	ug/Kg
621-64-7	n-Nitroso-di-n-propylamine	36.8	U	18.5	36.8	360	ug/Kg
67-72-1	Hexachloroethane	36.8	U	16.4	36.8	360	ug/Kg
98-95-3	Nitrobenzene	36.8	U	13.9	36.8	360	ug/Kg
78-59-1	Isophorone	36.8	U	12.1	36.8	360	ug/Kg
88-75-5	2-Nitrophenol	36.8	U	17.8	36.8	360	ug/Kg
105-67-9	2,4-Dimethylphenol	36.8	U	20.9	36.8	360	ug/Kg
111-91-1	bis(2-Chloroethoxy)methane	36.8	U	21.2	36.8	360	ug/Kg
120-83-2	2,4-Dichlorophenol	36.8	U	14	36.8	360	ug/Kg
91-20-3	Naphthalene	36.8	U	12.7	36.8	360	ug/Kg
106-47-8	4-Chloroaniline	36.8	U	25.9	36.8	360	ug/Kg
87-68-3	Hexachlorobutadiene	36.8	U	13.4	36.8	360	ug/Kg
105-60-2	Caprolactam	73.6	U	17.1	73.6	360	ug/Kg
59-50-7	4-Chloro-3-methylphenol	36.8	U	16.3	36.8	360	ug/Kg
91-57-6	2-Methylnaphthalene	36.8	U	9.3	36.8	360	ug/Kg
77-47-4	Hexachlorocyclopentadiene	36.8	U	8.9	36.8	360	ug/Kg
88-06-2	2,4,6-Trichlorophenol	36.8	U	11.3	36.8	360	ug/Kg
95-95-4	2,4,5-Trichlorophenol	36.8	U	25.8	36.8	360	ug/Kg
92-52-4	1,1-Biphenyl	36.8	U	13.9	36.8	360	ug/Kg
91-58-7	2-Chloronaphthalene	36.8	U	8.4	36.8	360	ug/Kg
88-74-4	2-Nitroaniline	36.8	U	16.3	36.8	360	ug/Kg
131-11-3	Dimethylphthalate	200	J	9.9	36.8	360	ug/Kg
208-96-8	Acenaphthylene	36.8	U	9.3	36.8	360	ug/Kg
606-20-2	2,6-Dinitrotoluene	36.8	U	15	36.8	360	ug/Kg

CHEMTECH 284 Sheffield Street, Mountainside, NJ 07092 Phone: 908 789 8900 Fax: 908 789 8922

Report of Analysis

Client:	LiRo Engineers, Inc.	Date Collected:	07/12/17
Project:	DDC OEGS - Cross Island Phase 2	Date Received:	07/13/17
Client Sample ID:	CI-SB3-0-2	SDG No.:	I4187
Lab Sample ID:	I4187-03	Matrix:	SOIL
Analytical Method:	SW8270	% Moisture:	9.5
Sample Wt/Vol:	30.04 Units: g	Final Vol:	1000 uL
Soil Aliquot Vol:	uL	Test:	SVOCMS Group1
Extraction Type :	Decanted : N	Level :	LOW
Injection Volume :	GPC Factor : 1.0	GPC Cleanup :	N PH :

File ID/Qc Batch:	Dilution:	Prep Date	Date Analyzed	Prep Batch ID
BF096793.D	1	07/14/17 09:53	07/15/17 01:19	PB100644

CAS Number	Parameter	Conc.	Qualifier	MDL	LOD	LOQ / CRQL	Units(Dry Weight)
99-09-2	3-Nitroaniline	73.6	U	23.6	73.6	360	ug/Kg
83-32-9	Acenaphthene	36.8	U	10.4	36.8	360	ug/Kg
51-28-5	2,4-Dinitrophenol	290	U	37.4	290	360	ug/Kg
100-02-7	4-Nitrophenol	180	U	68.3	180	360	ug/Kg
132-64-9	Dibenzofuran	36.8	U	14.3	36.8	360	ug/Kg
121-14-2	2,4-Dinitrotoluene	36.8	U	11	36.8	360	ug/Kg
84-66-2	Diethylphthalate	36.8	U	5.7	36.8	360	ug/Kg
7005-72-3	4-Chlorophenyl-phenylether	36.8	U	20	36.8	360	ug/Kg
86-73-7	Fluorene	36.8	U	13.9	36.8	360	ug/Kg
100-01-6	4-Nitroaniline	73.6	UQ	47.9	73.6	360	ug/Kg
534-52-1	4,6-Dinitro-2-methylphenol	180	U	21.1	180	360	ug/Kg
86-30-6	n-Nitrosodiphenylamine	36.8	U	8.8	36.8	360	ug/Kg
101-55-3	4-Bromophenyl-phenylether	36.8	U	7.2	36.8	360	ug/Kg
118-74-1	Hexachlorobenzene	36.8	U	15	36.8	360	ug/Kg
1912-24-9	Atrazine	36.8	U	19.4	36.8	360	ug/Kg
87-86-5	Pentachlorophenol	36.8	U	25.2	36.8	360	ug/Kg
85-01-8	Phenanthrene	36.8	U	9.9	36.8	360	ug/Kg
120-12-7	Anthracene	36.8	U	7.5	36.8	360	ug/Kg
86-74-8	Carbazole	36.8	U	8.1	36.8	360	ug/Kg
84-74-2	Di-n-butylphthalate	36.8	U	28.9	36.8	360	ug/Kg
206-44-0	Fluoranthene	74.3	J	7.4	36.8	360	ug/Kg
129-00-0	Pyrene	36.8	U	8.8	36.8	360	ug/Kg
85-68-7	Butylbenzylphthalate	36.8	UQ	17.7	36.8	360	ug/Kg
91-94-1	3,3-Dichlorobenzidine	36.8	U	23.6	36.8	360	ug/Kg
56-55-3	Benzo(a)anthracene	36.8	U	17.5	36.8	360	ug/Kg
218-01-9	Chrysene	36.8	U	16.7	36.8	360	ug/Kg
117-81-7	Bis(2-ethylhexyl)phthalate	89.3	J	13	36.8	360	ug/Kg
117-84-0	Di-n-octyl phthalate	36.8	U	4.2	36.8	360	ug/Kg
205-99-2	Benzo(b)fluoranthene	36.8	U	12	36.8	360	ug/Kg
207-08-9	Benzo(k)fluoranthene	36.8	U	17.3	36.8	360	ug/Kg
50-32-8	Benzo(a)pyrene	36.8	U	7.9	36.8	360	ug/Kg
193-39-5	Indeno(1,2,3-cd)pyrene	160	J	12.2	36.8	360	ug/Kg
53-70-3	Dibenzo(a,h)anthracene	36.8	U	10.6	36.8	360	ug/Kg

CHEMTECH 284 Sheffield Street, Mountainside, NJ 07092 Phone: 908 789 8900 Fax: 908 789 8922

Report of Analysis

Client:	LiRo Engineers, Inc.	Date Collected:	07/12/17
Project:	DDC OEGS - Cross Island Phase 2	Date Received:	07/13/17
Client Sample ID:	CI-SB3-0-2	SDG No.:	I4187
Lab Sample ID:	I4187-03	Matrix:	SOIL
Analytical Method:	SW8270	% Moisture:	9.5
Sample Wt/Vol:	30.04 Units: g	Final Vol:	1000 uL
Soil Aliquot Vol:	uL	Test:	SVOCMS Group1
Extraction Type :	Decanted : N	Level :	LOW
Injection Volume :	GPC Factor : 1.0	GPC Cleanup :	N PH :

File ID/Qc Batch:	Dilution:	Prep Date	Date Analyzed	Prep Batch ID
BF096793.D	1	07/14/17 09:53	07/15/17 01:19	PB100644

CAS Number	Parameter	Conc.	Qualifier	MDL	LOD	LOQ / CRQL	Units(Dry Weight)
191-24-2	Benzo(g,h,i)perylene	36.8	U	14.9	36.8	360	ug/Kg
95-94-3	1,2,4,5-Tetrachlorobenzene	36.8	U	14.5	36.8	360	ug/Kg
123-91-1	1,4-Dioxane	73.6	U	14.5	73.6	360	ug/Kg
58-90-2	2,3,4,6-Tetrachlorophenol	36.8	U	14.5	36.8	360	ug/Kg
SURROGATES							
367-12-4	2-Fluorophenol	110		28 - 127		74%	SPK: 150
13127-88-3	Phenol-d6	94.9		34 - 127		63%	SPK: 150
4165-60-0	Nitrobenzene-d5	59.7		31 - 132		60%	SPK: 100
321-60-8	2-Fluorobiphenyl	71.9		39 - 123		72%	SPK: 100
118-79-6	2,4,6-Tribromophenol	79.4		30 - 133		53%	SPK: 150
1718-51-0	Terphenyl-d14	35.4	*	37 - 115		35%	SPK: 100
INTERNAL STANDARDS							
3855-82-1	1,4-Dichlorobenzene-d4	96177	6.62				
1146-65-2	Naphthalene-d8	453086	7.9				
15067-26-2	Acenaphthene-d10	177678	9.65				
1517-22-2	Phenanthrene-d10	243120	11.13				
1719-03-5	Chrysene-d12	206723	13.76				
1520-96-3	Perylene-d12	209800	15.14				

U = Not Detected
LOQ = Limit of Quantitation
MDL = Method Detection Limit
LOD = Limit of Detection
E = Value Exceeds Calibration Range
Q = indicates LCS control criteria did not meet requirements
M = MS/MSD acceptance criteria did not meet requirements

J = Estimated Value
B = Analyte Found in Associated Method Blank
N = Presumptive Evidence of a Compound
* = Values outside of QC limits
D = Dilution
() = Laboratory InHouse Limit

CHEMTECH 284 Sheffield Street, Mountainside, NJ 07092 Phone: 908 789 8900 Fax: 908 789 8922

Report of Analysis

Client:	LiRo Engineers, Inc.	Date Collected:	07/12/17
Project:	DDC OEGS - Cross Island Phase 2	Date Received:	07/13/17
Client Sample ID:	CI-SB3-0-2	SDG No.:	I4187
Lab Sample ID:	I4187-03	Matrix:	SOIL
Analytical Method:	SW8260	% Moisture:	9.5
Sample Wt/Vol:	5 Units: g	Final Vol:	5000 uL
Soil Aliquot Vol:	uL	Test:	VOCMS Group1
GC Column:	RTX-VMS ID : 0.18	Level :	LOW

File ID/Qc Batch:	Dilution:	Prep Date	Date Analyzed	Prep Batch ID
VF053629.D	1		07/14/17 19:09	VF071417

CAS Number	Parameter	Conc.	Qualifier	MDL	LOD	LOQ / CRQL	Units(Dry Weight)
TARGETS							
75-71-8	Dichlorodifluoromethane	0.55	U	0.55	0.55	5.5	ug/Kg
74-87-3	Chloromethane	0.55	U	0.55	0.55	5.5	ug/Kg
75-01-4	Vinyl Chloride	0.55	U	0.55	0.55	5.5	ug/Kg
74-83-9	Bromomethane	1.1	U	1.1	1.1	5.5	ug/Kg
75-00-3	Chloroethane	0.55	U	0.55	0.55	5.5	ug/Kg
75-69-4	Trichlorofluoromethane	0.55	UQ	0.55	0.55	5.5	ug/Kg
76-13-1	1,1,2-Trichlorotrifluoroethane	0.55	U	0.55	0.55	5.5	ug/Kg
75-65-0	Tert butyl alcohol	27.6	U	8.2	27.6	27.6	ug/Kg
75-35-4	1,1-Dichloroethene	0.55	UQ	0.55	0.55	5.5	ug/Kg
67-64-1	Acetone	2.8	U	2.8	2.8	27.6	ug/Kg
75-15-0	Carbon Disulfide	0.55	U	0.55	0.55	5.5	ug/Kg
1634-04-4	Methyl tert-butyl Ether	0.55	UQ	0.55	0.55	5.5	ug/Kg
79-20-9	Methyl Acetate	1.1	U	1.1	1.1	5.5	ug/Kg
75-09-2	Methylene Chloride	3.4	J	0.55	0.55	5.5	ug/Kg
156-60-5	trans-1,2-Dichloroethene	0.55	UQ	0.55	0.55	5.5	ug/Kg
75-34-3	1,1-Dichloroethane	0.55	UQ	0.55	0.55	5.5	ug/Kg
110-82-7	Cyclohexane	0.55	U	0.55	0.55	5.5	ug/Kg
78-93-3	2-Butanone	8.3	U	3.4	8.3	27.6	ug/Kg
56-23-5	Carbon Tetrachloride	0.55	U	0.55	0.55	5.5	ug/Kg
156-59-2	cis-1,2-Dichloroethene	0.55	U	0.55	0.55	5.5	ug/Kg
74-97-5	Bromochloromethane	0.55	U	0.55	0.55	5.5	ug/Kg
67-66-3	Chloroform	0.55	UQ	0.55	0.55	5.5	ug/Kg
71-55-6	1,1,1-Trichloroethane	0.55	U	0.55	0.55	5.5	ug/Kg
108-87-2	Methylcyclohexane	0.55	U	0.55	0.55	5.5	ug/Kg
71-43-2	Benzene	0.55	U	0.42	0.55	5.5	ug/Kg
107-06-2	1,2-Dichloroethane	0.55	UQ	0.55	0.55	5.5	ug/Kg
79-01-6	Trichloroethene	0.55	U	0.55	0.55	5.5	ug/Kg
78-87-5	1,2-Dichloropropane	0.55	U	0.29	0.55	5.5	ug/Kg
5-27-4	Bromodichloromethane	0.55	U	0.55	0.55	5.5	ug/Kg
108-10-1	4-Methyl-2-Pentanone	2.8	U	2.8	2.8	27.6	ug/Kg
108-88-3	Toluene	0.55	U	0.55	0.55	5.5	ug/Kg
10061-02-6	t-1,3-Dichloropropene	0.55	U	0.55	0.55	5.5	ug/Kg

CHEMTECH 284 Sheffield Street, Mountainside, NJ 07092 Phone: 908 789 8900 Fax: 908 789 8922

Report of Analysis

Client:	LiRo Engineers, Inc.	Date Collected:	07/12/17
Project:	DDC OEGS - Cross Island Phase 2	Date Received:	07/13/17
Client Sample ID:	CI-SB3-0-2	SDG No.:	I4187
Lab Sample ID:	I4187-03	Matrix:	SOIL
Analytical Method:	SW8260	% Moisture:	9.5
Sample Wt/Vol:	5 Units: g	Final Vol:	5000 uL
Soil Aliquot Vol:	uL	Test:	VOCMS Group1
GC Column:	RTX-VMS ID : 0.18	Level :	LOW

File ID/Qc Batch:	Dilution:	Prep Date	Date Analyzed	Prep Batch ID
VF053629.D	1		07/14/17 19:09	VF071417

CAS Number	Parameter	Conc.	Qualifier	MDL	LOD	LOQ / CRQL	Units(Dry Weight)
10061-01-5	cis-1,3-Dichloropropene	0.55	U	0.55	0.55	5.5	ug/Kg
79-00-5	1,1,2-Trichloroethane	1.1	U	0.99	1.1	5.5	ug/Kg
591-78-6	2-Hexanone	2.8	U	2.8	2.8	27.6	ug/Kg
124-48-1	Dibromochloromethane	0.55	U	0.55	0.55	5.5	ug/Kg
106-93-4	1,2-Dibromoethane	0.55	U	0.55	0.55	5.5	ug/Kg
127-18-4	Tetrachloroethene	0.55	U	0.55	0.55	5.5	ug/Kg
108-90-7	Chlorobenzene	0.55	U	0.55	0.55	5.5	ug/Kg
100-41-4	Ethyl Benzene	0.55	U	0.55	0.55	5.5	ug/Kg
179601-23-1	m/p-Xylenes	1.1	U	0.8	1.1	11	ug/Kg
95-47-6	o-Xylene	0.55	U	0.55	0.55	5.5	ug/Kg
100-42-5	Styrene	0.55	U	0.5	0.55	5.5	ug/Kg
75-25-2	Bromoform	1.7	U	0.82	1.7	5.5	ug/Kg
98-82-8	Isopropylbenzene	0.55	U	0.53	0.55	5.5	ug/Kg
79-34-5	1,1,2,2-Tetrachloroethane	0.55	U	0.51	0.55	5.5	ug/Kg
541-73-1	1,3-Dichlorobenzene	0.55	U	0.41	0.55	5.5	ug/Kg
106-46-7	1,4-Dichlorobenzene	0.55	U	0.45	0.55	5.5	ug/Kg
95-50-1	1,2-Dichlorobenzene	0.55	U	0.55	0.55	5.5	ug/Kg
96-12-8	1,2-Dibromo-3-Chloropropane	5.5	U	0.96	5.5	5.5	ug/Kg
120-82-1	1,2,4-Trichlorobenzene	0.55	U	0.55	0.55	5.5	ug/Kg
87-61-6	1,2,3-Trichlorobenzene	1.1	U	0.55	1.1	5.5	ug/Kg
SURROGATES							
17060-07-0	1,2-Dichloroethane-d4	36.8		56 - 120		74%	SPK: 50
1868-53-7	Dibromofluoromethane	45.3		57 - 135		91%	SPK: 50
2037-26-5	Toluene-d8	42.3		67 - 123		85%	SPK: 50
460-00-4	4-Bromofluorobenzene	33.4		33 - 141		67%	SPK: 50
INTERNAL STANDARDS							
363-72-4	Pentafluorobenzene	391631	4.82				
540-36-3	1,4-Difluorobenzene	743888	5.54				
3114-55-4	Chlorobenzene-d5	610113	9.71				
3855-82-1	1,4-Dichlorobenzene-d4	254154	12.49				

CHEMTECH 284 Sheffield Street, Mountainside, NJ 07092 Phone: 908 789 8900 Fax: 908 789 8922

Report of Analysis

Client:	LiRo Engineers, Inc.	Date Collected:	07/12/17
Project:	DDC OEGS - Cross Island Phase 2	Date Received:	07/13/17
Client Sample ID:	CI-SB3-0-2	SDG No.:	I4187
Lab Sample ID:	I4187-03	Matrix:	SOIL
Analytical Method:	SW8260	% Moisture:	9.5
Sample Wt/Vol:	5 Units: g	Final Vol:	5000 uL
Soil Aliquot Vol:	uL	Test:	VOCMS Group1
GC Column:	RTX-VMS ID : 0.18	Level :	LOW

File ID/Qc Batch:	Dilution:	Prep Date	Date Analyzed	Prep Batch ID
VF053629.D	1		07/14/17 19:09	VF071417

CAS Number	Parameter	Conc.	Qualifier	MDL	LOD	LOQ / CRQL	Units

U = Not Detected
LOQ = Limit of Quantitation
MDL = Method Detection Limit
LOD = Limit of Detection
E = Value Exceeds Calibration Range
Q = indicates LCS control criteria did not meet requirements
M = MS/MSD acceptance criteria did not meet requirements

J = Estimated Value
B = Analyte Found in Associated Method Blank
N = Presumptive Evidence of a Compound
* = Values outside of QC limits
D = Dilution
() = Laboratory InHouse Limit

CHEMTECH 284 Sheffield Street, Mountainside, NJ 07092 Phone: 908 789 8900 Fax: 908 789 8922

Report of Analysis

Client:	LiRo Engineers, Inc.	Date Collected:	07/12/17
Project:	DDC OEGS - Cross Island Phase 2	Date Received:	07/13/17
Client Sample ID:	CI-SB4-0-2	SDG No.:	I4187
Lab Sample ID:	I4187-04	Matrix:	SOIL
Level (low/med):	low	% Solid:	90.7

Cas	Parameter	Conc.	Qua.	DF	MDL	LOD	LOQ / CRQL	Units(Dry Weight)	Prep Date	Date Ana.	Ana Met.
7429-90-5	Aluminum	7580		1	0.775	1.15	4.61	mg/Kg	07/14/17 10:05	07/17/17 14:49	SW6010
7440-36-0	Antimony	0.577	UN	1	0.517	0.577	2.31	mg/Kg	07/14/17 10:05	07/17/17 14:49	SW6010
7440-38-2	Arsenic	10.1		1	0.231	0.231	0.923	mg/Kg	07/14/17 10:05	07/17/17 14:49	SW6010
7440-39-3	Barium	51.8		1	0.369	1.15	4.61	mg/Kg	07/14/17 10:05	07/17/17 14:49	SW6010
7440-41-7	Beryllium	0.388		1	0.055	0.069	0.277	mg/Kg	07/14/17 10:05	07/17/17 14:49	SW6010
7440-43-9	Cadmium	0.264	J	1	0.055	0.069	0.277	mg/Kg	07/14/17 10:05	07/17/17 14:49	SW6010
7440-70-2	Calcium	414		1	0.987	23.1	92.3	mg/Kg	07/14/17 10:05	07/17/17 14:49	SW6010
7440-47-3	Chromium	11.6		1	0.115	0.115	0.461	mg/Kg	07/14/17 10:05	07/17/17 14:49	SW6010
7440-48-4	Cobalt	4.2		1	0.346	0.346	1.38	mg/Kg	07/14/17 10:05	07/17/17 14:49	SW6010
7440-50-8	Copper	13.9		1	0.231	0.231	0.923	mg/Kg	07/14/17 10:05	07/17/17 14:49	SW6010
7439-89-6	Iron	12900		1	1.15	1.15	4.61	mg/Kg	07/14/17 10:05	07/17/17 14:49	SW6010
7439-92-1	Lead	68.2		1	0.111	0.231	0.554	mg/Kg	07/14/17 10:05	07/17/17 14:49	SW6010
7439-95-4	Magnesium	823		1	4.23	23.1	92.3	mg/Kg	07/14/17 10:05	07/17/17 14:49	SW6010
7439-96-5	Manganese	273		1	0.175	0.231	0.923	mg/Kg	07/14/17 10:05	07/17/17 14:49	SW6010
7439-97-6	Mercury	1.06	D	5	0.037	0.037	0.074	mg/Kg	07/17/17 12:53	07/18/17 12:03	SW7471A
7440-02-0	Nickel	11.6		1	0.424	0.461	1.85	mg/Kg	07/14/17 10:05	07/17/17 14:49	SW6010
7440-09-7	Potassium	196		1	3.23	23.1	92.3	mg/Kg	07/14/17 10:05	07/17/17 14:49	SW6010
7782-49-2	Selenium	5.31		1	0.231	0.231	0.923	mg/Kg	07/14/17 10:05	07/17/17 14:49	SW6010
7440-22-4	Silver	1.11		1	0.115	0.115	0.461	mg/Kg	07/14/17 10:05	07/17/17 14:49	SW6010
7440-23-5	Sodium	265		1	2.33	23.1	92.3	mg/Kg	07/14/17 10:05	07/17/17 14:49	SW6010
7440-28-0	Thallium	0.264	J	1	0.249	0.461	1.85	mg/Kg	07/14/17 10:05	07/17/17 14:49	SW6010
7440-62-2	Vanadium	15.1		1	0.461	0.461	1.85	mg/Kg	07/14/17 10:05	07/17/17 14:49	SW6010
7440-66-6	Zinc	44.3		1	0.461	0.461	1.85	mg/Kg	07/14/17 10:05	07/17/17 14:49	SW6010

Color Before:	Brown	Clarity Before:		Texture:	Medium
Color After:	Yellow	Clarity After:		Artifacts:	No
Comments:	METALS-TAL				

U = Not Detected
LOQ = Limit of Quantitation
MDL = Method Detection Limit
LOD = Limit of Detection
D = Dilution
Q = indicates LCS control criteria did not meet requirements

J = Estimated Value
B = Analyte Found in Associated Method Blank
* = indicates the duplicate analysis is not within control limits.
E = Indicates the reported value is estimated because of the presence of interference.
OR = Over Range
N =Spiked sample recovery not within control limits

CHEMTECH 284 Sheffield Street, Mountainside, NJ 07092 Phone: 908 789 8900 Fax: 908 789 8922

Report of Analysis

Client:	LiRo Engineers, Inc.	Date Collected:	07/12/17
Project:	DDC OEGS - Cross Island Phase 2	Date Received:	07/13/17
Client Sample ID:	CI-SB4-0-2	SDG No.:	I4187
Lab Sample ID:	I4187-04	Matrix:	SOIL
Analytical Method:	SW8082A	% Moisture:	9.3 Decanted:
Sample Wt/Vol:	30.03 Units: g	Final Vol:	10000 uL
Soil Aliquot Vol:	uL	Test:	PCB
Extraction Type:		Injection Volume :	
GPC Factor :	1.0 PH :		

File ID/Qc Batch:	Dilution:	Prep Date	Date Analyzed	Prep Batch ID
PQ019425.D	1	07/14/17 10:55	07/18/17 16:19	PB100661

CAS Number	Parameter	Conc.	Qualifier	MDL	LOD	LOQ / CRQL	Units(Dry Weight)
TARGETS							
12674-11-2	Aroclor-1016	3.7	U	3.7	3.7	18.7	ug/kg
11104-28-2	Aroclor-1221	3.7	U	3.7	3.7	18.7	ug/kg
11141-16-5	Aroclor-1232	3.7	U	3.7	3.7	18.7	ug/kg
53469-21-9	Aroclor-1242	3.7	U	3.7	3.7	18.7	ug/kg
12672-29-6	Aroclor-1248	3.7	U	3.7	3.7	18.7	ug/kg
11097-69-1	Aroclor-1254	3.7	U	1.6	3.7	18.7	ug/kg
37324-23-5	Aroclor-1262	3.7	U	3.7	3.7	18.7	ug/kg
11100-14-4	Aroclor-1268	3.7	U	3.7	3.7	18.7	ug/kg
11096-82-5	Aroclor-1260	3.7	U	3.7	3.7	18.7	ug/kg
SURROGATES							
877-09-8	Tetrachloro-m-xylene	17.2		10 - 166		86%	SPK: 20
2051-24-3	Decachlorobiphenyl	13.7		60 - 125		66%	SPK: 20

Comments:

U = Not Detected
LOQ = Limit of Quantitation
MDL = Method Detection Limit
LOD = Limit of Detection
E = Value Exceeds Calibration Range
P = Indicates >25% difference for detected concentrations between the two GC columns
Q = indicates LCS control criteria did not meet requirements
M = MS/MSD acceptance criteria did not meet requirements

J = Estimated Value
B = Analyte Found in Associated Method Blank
N = Presumptive Evidence of a Compound
* = Values outside of QC limits
D = Dilution
S = Indicates estimated value where valid five-point calibration was not performed prior to analyte detection in sample.
() = Laboratory InHouse Limit

CHEMTECH 284 Sheffield Street, Mountainside, NJ 07092 Phone: 908 789 8900 Fax: 908 789 8922

Report of Analysis

Client:	LiRo Engineers, Inc.	Date Collected:	07/12/17
Project:	DDC OEGS - Cross Island Phase 2	Date Received:	07/13/17
Client Sample ID:	CI-SB4-0-2	SDG No.:	I4187
Lab Sample ID:	I4187-04	Matrix:	SOIL
Analytical Method:	SW8081	% Moisture:	9.3 Decanted:
Sample Wt/Vol:	30.03 Units: g	Final Vol:	10000 uL
Soil Aliquot Vol:	uL	Test:	PESTICIDE Group1
Extraction Type:		Injection Volume :	
GPC Factor :	1.0 PH :		

File ID/Qc Batch:	Dilution:	Prep Date	Date Analyzed	Prep Batch ID
PL027275.D	1	07/14/17 08:10	07/14/17 18:21	PB100634

CAS Number	Parameter	Conc.	Qualifier	MDL	LOD	LOQ / CRQL	Units(Dry Weight)
TARGETS							
319-84-6	alpha-BHC	0.364	U	0.143	0.364	1.9	ug/kg
319-85-7	beta-BHC	0.364	U	0.198	0.364	1.9	ug/kg
319-86-8	delta-BHC	0.364	U	0.11	0.364	1.9	ug/kg
58-89-9	gamma-BHC (Lindane)	0.364	U	0.165	0.364	1.9	ug/kg
76-44-8	Heptachlor	0.364	U	0.154	0.364	1.9	ug/kg
309-00-2	Aldrin	0.364	U	0.11	0.364	1.9	ug/kg
1024-57-3	Heptachlor epoxide	0.364	U	0.176	0.364	1.9	ug/kg
959-98-8	Endosulfan I	0.364	U	0.165	0.364	1.9	ug/kg
60-57-1	Dieldrin	0.364	U	0.143	0.364	1.9	ug/kg
72-55-9	4,4-DDE	1.1	J	0.22	0.364	1.9	ug/kg
72-20-8	Endrin	0.364	U	0.198	0.364	1.9	ug/kg
33213-65-9	Endosulfan II	0.364	U	0.154	0.364	1.9	ug/kg
72-54-8	4,4-DDD	0.364	U	0.187	0.364	1.9	ug/kg
1031-07-8	Endosulfan Sulfate	0.364	U	0.165	0.364	1.9	ug/kg
50-29-3	4,4-DDT	0.364	U	0.154	0.364	1.9	ug/kg
72-43-5	Methoxychlor	0.364	U	0.187	0.364	1.9	ug/kg
53494-70-5	Endrin ketone	0.364	U	0.143	0.364	1.9	ug/kg
7421-93-4	Endrin aldehyde	0.364	U	0.165	0.364	1.9	ug/kg
5103-71-9	alpha-Chlordane	50.4	EP	0.154	0.364	1.9	ug/kg
5103-74-2	gamma-Chlordane	25	P	0.143	0.364	1.9	ug/kg
8001-35-2	Toxaphene	3.7	U	3.7	3.7	18.7	ug/kg
SURROGATES							
2051-24-3	Decachlorobiphenyl	18.9		10 - 169		87%	SPK: 20
877-09-8	Tetrachloro-m-xylene	19.7		31 - 151		96%	SPK: 20

CHEMTECH 284 Sheffield Street, Mountainside, NJ 07092 Phone: 908 789 8900 Fax: 908 789 8922

Report of Analysis

Client:	LiRo Engineers, Inc.	Date Collected:	07/12/17
Project:	DDC OEGS - Cross Island Phase 2	Date Received:	07/13/17
Client Sample ID:	CI-SB4-0-2	SDG No.:	I4187
Lab Sample ID:	I4187-04	Matrix:	SOIL
Analytical Method:	SW8081	% Moisture:	9.3 Decanted:
Sample Wt/Vol:	30.03 Units: g	Final Vol:	10000 uL
Soil Aliquot Vol:	uL	Test:	PESTICIDE Group1
Extraction Type:		Injection Volume :	
GPC Factor :	1.0 PH :		

File ID/Qc Batch:	Dilution:	Prep Date	Date Analyzed	Prep Batch ID
PL027275.D	1	07/14/17 08:10	07/14/17 18:21	PB100634

CAS Number	Parameter	Conc.	Qualifier	MDL	LOD	LOQ / CRQL	Units

Comments:

U = Not Detected
LOQ = Limit of Quantitation
MDL = Method Detection Limit
LOD = Limit of Detection
E = Value Exceeds Calibration Range
P = Indicates >25% difference for detected concentrations between the two GC columns
Q = indicates LCS control criteria did not meet requirements
M = MS/MSD acceptance criteria did not meet requirements

J = Estimated Value
B = Analyte Found in Associated Method Blank
N = Presumptive Evidence of a Compound
* = Values outside of QC limits
D = Dilution
S = Indicates estimated value where valid five-point calibration was not performed prior to analyte detection in sample.
() = Laboratory InHouse Limit

CHEMTECH 284 Sheffield Street, Mountainside, NJ 07092 Phone: 908 789 8900 Fax: 908 789 8922

Report of Analysis

Client:	LiRo Engineers, Inc.	Date Collected:	07/12/17
Project:	DDC OEGS - Cross Island Phase 2	Date Received:	07/13/17
Client Sample ID:	CI-SB4-0-2DL	SDG No.:	I4187
Lab Sample ID:	I4187-04DL	Matrix:	SOIL
Analytical Method:	SW8081	% Moisture:	9.3 Decanted:
Sample Wt/Vol:	30.03 Units: g	Final Vol:	10000 uL
Soil Aliquot Vol:	uL	Test:	PESTICIDE Group1
Extraction Type:		Injection Volume :	
GPC Factor :	1.0 PH :		

File ID/Qc Batch:	Dilution:	Prep Date	Date Analyzed	Prep Batch ID
PL027325.D	2	07/14/17 08:10	07/17/17 18:22	PB100634

CAS Number	Parameter	Conc.	Qualifier	MDL	LOD	LOQ / CRQL	Units(Dry Weight)
TARGETS							
319-84-6	alpha-BHC	0.727	UD	0.286	0.727	3.7	ug/kg
319-85-7	beta-BHC	0.727	UD	0.396	0.727	3.7	ug/kg
319-86-8	delta-BHC	0.727	UD	0.22	0.727	3.7	ug/kg
58-89-9	gamma-BHC (Lindane)	0.727	UD	0.33	0.727	3.7	ug/kg
76-44-8	Heptachlor	0.727	UD	0.308	0.727	3.7	ug/kg
309-00-2	Aldrin	0.727	UD	0.22	0.727	3.7	ug/kg
1024-57-3	Heptachlor epoxide	0.727	UD	0.352	0.727	3.7	ug/kg
959-98-8	Endosulfan I	0.727	UD	0.33	0.727	3.7	ug/kg
60-57-1	Dieldrin	0.727	UD	0.286	0.727	3.7	ug/kg
72-55-9	4,4-DDE	1.4	JDP	0.441	0.727	3.7	ug/kg
72-20-8	Endrin	0.727	UD	0.396	0.727	3.7	ug/kg
33213-65-9	Endosulfan II	0.727	UD	0.308	0.727	3.7	ug/kg
72-54-8	4,4-DDD	0.727	UD	0.374	0.727	3.7	ug/kg
1031-07-8	Endosulfan Sulfate	0.727	UD	0.33	0.727	3.7	ug/kg
50-29-3	4,4-DDT	0.727	UD	0.308	0.727	3.7	ug/kg
72-43-5	Methoxychlor	0.727	UD	0.374	0.727	3.7	ug/kg
53494-70-5	Endrin ketone	0.727	UD	0.286	0.727	3.7	ug/kg
7421-93-4	Endrin aldehyde	0.727	UD	0.33	0.727	3.7	ug/kg
5103-71-9	alpha-Chlordane	69.9	DP	0.308	0.727	3.7	ug/kg
5103-74-2	gamma-Chlordane	32.6	DP	0.286	0.727	3.7	ug/kg
8001-35-2	Toxaphene	7.3	UD	7.3	7.3	37.4	ug/kg
SURROGATES							
2051-24-3	Decachlorobiphenyl	27.8		10 - 169		134%	SPK: 20
877-09-8	Tetrachloro-m-xylene	25.2		31 - 151		126%	SPK: 20

CHEMTECH 284 Sheffield Street, Mountainside, NJ 07092 Phone: 908 789 8900 Fax: 908 789 8922

Report of Analysis

Client:	LiRo Engineers, Inc.	Date Collected:	07/12/17
Project:	DDC OEGS - Cross Island Phase 2	Date Received:	07/13/17
Client Sample ID:	CI-SB4-0-2DL	SDG No.:	I4187
Lab Sample ID:	I4187-04DL	Matrix:	SOIL
Analytical Method:	SW8081	% Moisture:	9.3 Decanted:
Sample Wt/Vol:	30.03 Units: g	Final Vol:	10000 uL
Soil Aliquot Vol:	uL	Test:	PESTICIDE Group1
Extraction Type:		Injection Volume :	
GPC Factor :	1.0 PH :		

File ID/Qc Batch:	Dilution:	Prep Date	Date Analyzed	Prep Batch ID
PL027325.D	2	07/14/17 08:10	07/17/17 18:22	PB100634

CAS Number	Parameter	Conc.	Qualifier	MDL	LOD	LOQ / CRQL	Units

Comments:

U = Not Detected
LOQ = Limit of Quantitation
MDL = Method Detection Limit
LOD = Limit of Detection
E = Value Exceeds Calibration Range
P = Indicates >25% difference for detected concentrations between the two GC columns
Q = indicates LCS control criteria did not meet requirements
M = MS/MSD acceptance criteria did not meet requirements

J = Estimated Value
B = Analyte Found in Associated Method Blank
N = Presumptive Evidence of a Compound
* = Values outside of QC limits
D = Dilution
S = Indicates estimated value where valid five-point calibration was not performed prior to analyte detection in sample.
() = Laboratory InHouse Limit

CHEMTECH 284 Sheffield Street, Mountainside, NJ 07092 Phone: 908 789 8900 Fax: 908 789 8922

Report of Analysis

Client:	LiRo Engineers, Inc.	Date Collected:	07/12/17
Project:	DDC OEGS - Cross Island Phase 2	Date Received:	07/13/17
Client Sample ID:	CI-SB4-0-2	SDG No.:	I4187
Lab Sample ID:	I4187-04	Matrix:	SOIL
Analytical Method:	SW8270	% Moisture:	9.3
Sample Wt/Vol:	30.01 Units: g	Final Vol:	1000 uL
Soil Aliquot Vol:	uL	Test:	SVOCMS Group1
Extraction Type :	Decanted : N	Level :	LOW
Injection Volume :	GPC Factor : 1.0	GPC Cleanup :	N PH :

File ID/Qc Batch:	Dilution:	Prep Date	Date Analyzed	Prep Batch ID
BF096794.D	1	07/14/17 09:53	07/15/17 01:47	PB100644

CAS Number	Parameter	Conc.	Qualifier	MDL	LOD	LOQ / CRQL	Units(Dry Weight)
TARGETS							
100-52-7	Benzaldehyde	36.7	U	19.2	36.7	360	ug/Kg
108-95-2	Phenol	36.7	U	8.5	36.7	360	ug/Kg
111-44-4	bis(2-Chloroethyl)ether	36.7	U	17.6	36.7	360	ug/Kg
95-57-8	2-Chlorophenol	36.7	U	19.4	36.7	360	ug/Kg
95-48-7	2-Methylphenol	36.7	U	19.9	36.7	360	ug/Kg
108-60-1	2,2-oxybis(1-Chloropropane)	36.7	U	15.2	36.7	360	ug/Kg
98-86-2	Acetophenone	36.7	U	11.2	36.7	360	ug/Kg
65794-96-9	3+4-Methylphenols	36.7	U	19.1	36.7	360	ug/Kg
621-64-7	n-Nitroso-di-n-propylamine	36.7	U	18.5	36.7	360	ug/Kg
67-72-1	Hexachloroethane	36.7	U	16.4	36.7	360	ug/Kg
98-95-3	Nitrobenzene	36.7	U	13.9	36.7	360	ug/Kg
78-59-1	Isophorone	36.7	U	12.1	36.7	360	ug/Kg
88-75-5	2-Nitrophenol	36.7	U	17.7	36.7	360	ug/Kg
105-67-9	2,4-Dimethylphenol	36.7	U	20.8	36.7	360	ug/Kg
111-91-1	bis(2-Chloroethoxy)methane	36.7	U	21.2	36.7	360	ug/Kg
120-83-2	2,4-Dichlorophenol	36.7	U	14	36.7	360	ug/Kg
91-20-3	Naphthalene	36.7	U	12.7	36.7	360	ug/Kg
106-47-8	4-Chloroaniline	36.7	U	25.9	36.7	360	ug/Kg
87-68-3	Hexachlorobutadiene	36.7	U	13.3	36.7	360	ug/Kg
105-60-2	Caprolactam	73.5	U	17.1	73.5	360	ug/Kg
59-50-7	4-Chloro-3-methylphenol	36.7	U	16.3	36.7	360	ug/Kg
91-57-6	2-Methylnaphthalene	36.7	U	9.3	36.7	360	ug/Kg
77-47-4	Hexachlorocyclopentadiene	36.7	U	8.9	36.7	360	ug/Kg
88-06-2	2,4,6-Trichlorophenol	36.7	U	11.2	36.7	360	ug/Kg
95-95-4	2,4,5-Trichlorophenol	36.7	U	25.8	36.7	360	ug/Kg
92-52-4	1,1-Biphenyl	36.7	U	13.9	36.7	360	ug/Kg
91-58-7	2-Chloronaphthalene	36.7	U	8.4	36.7	360	ug/Kg
88-74-4	2-Nitroaniline	36.7	U	16.3	36.7	360	ug/Kg
131-11-3	Dimethylphthalate	270	J	9.9	36.7	360	ug/Kg
208-96-8	Acenaphthylene	36.7	U	9.3	36.7	360	ug/Kg
606-20-2	2,6-Dinitrotoluene	36.7	U	15	36.7	360	ug/Kg

CHEMTECH 284 Sheffield Street, Mountainside, NJ 07092 Phone: 908 789 8900 Fax: 908 789 8922

Report of Analysis

Client:	LiRo Engineers, Inc.	Date Collected:	07/12/17
Project:	DDC OEGS - Cross Island Phase 2	Date Received:	07/13/17
Client Sample ID:	CI-SB4-0-2	SDG No.:	I4187
Lab Sample ID:	I4187-04	Matrix:	SOIL
Analytical Method:	SW8270	% Moisture:	9.3
Sample Wt/Vol:	30.01 Units: g	Final Vol:	1000 uL
Soil Aliquot Vol:	uL	Test:	SVOCMS Group1
Extraction Type :	Decanted : N	Level :	LOW
Injection Volume :	GPC Factor : 1.0	GPC Cleanup :	N PH :

File ID/Qc Batch:	Dilution:	Prep Date	Date Analyzed	Prep Batch ID
BF096794.D	1	07/14/17 09:53	07/15/17 01:47	PB100644

CAS Number	Parameter	Conc.	Qualifier	MDL	LOD	LOQ / CRQL	Units(Dry Weight)
99-09-2	3-Nitroaniline	73.5	U	23.6	73.5	360	ug/Kg
83-32-9	Acenaphthene	36.7	U	10.4	36.7	360	ug/Kg
51-28-5	2,4-Dinitrophenol	290	U	37.4	290	360	ug/Kg
100-02-7	4-Nitrophenol	180	U	68.2	180	360	ug/Kg
132-64-9	Dibenzofuran	36.7	U	14.3	36.7	360	ug/Kg
121-14-2	2,4-Dinitrotoluene	36.7	U	11	36.7	360	ug/Kg
84-66-2	Diethylphthalate	36.7	U	5.7	36.7	360	ug/Kg
7005-72-3	4-Chlorophenyl-phenylether	36.7	U	19.9	36.7	360	ug/Kg
86-73-7	Fluorene	36.7	U	13.9	36.7	360	ug/Kg
100-01-6	4-Nitroaniline	73.5	UQ	47.8	73.5	360	ug/Kg
534-52-1	4,6-Dinitro-2-methylphenol	180	U	21.1	180	360	ug/Kg
86-30-6	n-Nitrosodiphenylamine	36.7	U	8.8	36.7	360	ug/Kg
101-55-3	4-Bromophenyl-phenylether	36.7	U	7.2	36.7	360	ug/Kg
118-74-1	Hexachlorobenzene	36.7	U	15	36.7	360	ug/Kg
1912-24-9	Atrazine	36.7	U	19.4	36.7	360	ug/Kg
87-86-5	Pentachlorophenol	36.7	U	25.1	36.7	360	ug/Kg
85-01-8	Phenanthrene	100	J	9.9	36.7	360	ug/Kg
120-12-7	Anthracene	36.7	U	7.5	36.7	360	ug/Kg
86-74-8	Carbazole	36.7	U	8	36.7	360	ug/Kg
84-74-2	Di-n-butylphthalate	36.7	U	28.9	36.7	360	ug/Kg
206-44-0	Fluoranthene	200	J	7.4	36.7	360	ug/Kg
129-00-0	Pyrene	130	J	8.8	36.7	360	ug/Kg
85-68-7	Butylbenzylphthalate	36.7	UQ	17.6	36.7	360	ug/Kg
91-94-1	3,3-Dichlorobenzidine	36.7	U	23.6	36.7	360	ug/Kg
56-55-3	Benzo(a)anthracene	98.1	J	17.5	36.7	360	ug/Kg
218-01-9	Chrysene	100	J	16.6	36.7	360	ug/Kg
117-81-7	Bis(2-ethylhexyl)phthalate	36.7	U	13	36.7	360	ug/Kg
117-84-0	Di-n-octyl phthalate	36.7	U	4.2	36.7	360	ug/Kg
205-99-2	Benzo(b)fluoranthene	140	J	12	36.7	360	ug/Kg
207-08-9	Benzo(k)fluoranthene	36.7	U	17.3	36.7	360	ug/Kg
50-32-8	Benzo(a)pyrene	110	J	7.9	36.7	360	ug/Kg
193-39-5	Indeno(1,2,3-cd)pyrene	190	J	12.2	36.7	360	ug/Kg
53-70-3	Dibenzo(a,h)anthracene	36.7	U	10.6	36.7	360	ug/Kg

CHEMTECH 284 Sheffield Street, Mountainside, NJ 07092 Phone: 908 789 8900 Fax: 908 789 8922

Report of Analysis

Client:	LiRo Engineers, Inc.	Date Collected:	07/12/17
Project:	DDC OEGS - Cross Island Phase 2	Date Received:	07/13/17
Client Sample ID:	CI-SB4-0-2	SDG No.:	I4187
Lab Sample ID:	I4187-04	Matrix:	SOIL
Analytical Method:	SW8270	% Moisture:	9.3
Sample Wt/Vol:	30.01 Units: g	Final Vol:	1000 uL
Soil Aliquot Vol:	uL	Test:	SVOCMS Group1
Extraction Type :	Decanted : N	Level :	LOW
Injection Volume :	GPC Factor : 1.0	GPC Cleanup :	N PH :

File ID/Qc Batch:	Dilution:	Prep Date	Date Analyzed	Prep Batch ID
BF096794.D	1	07/14/17 09:53	07/15/17 01:47	PB100644

CAS Number	Parameter	Conc.	Qualifier	MDL	LOD	LOQ / CRQL	Units(Dry Weight)
191-24-2	Benzo(g,h,i)perylene	36.7	U	14.9	36.7	360	ug/Kg
95-94-3	1,2,4,5-Tetrachlorobenzene	36.7	U	14.4	36.7	360	ug/Kg
123-91-1	1,4-Dioxane	73.5	U	14.4	73.5	360	ug/Kg
58-90-2	2,3,4,6-Tetrachlorophenol	36.7	U	14.4	36.7	360	ug/Kg
SURROGATES							
367-12-4	2-Fluorophenol	97.4		28 - 127		65%	SPK: 150
13127-88-3	Phenol-d6	95.9		34 - 127		64%	SPK: 150
4165-60-0	Nitrobenzene-d5	68.2		31 - 132		68%	SPK: 100
321-60-8	2-Fluorobiphenyl	73.9		39 - 123		74%	SPK: 100
118-79-6	2,4,6-Tribromophenol	90.7		30 - 133		60%	SPK: 150
1718-51-0	Terphenyl-d14	39.6		37 - 115		40%	SPK: 100
INTERNAL STANDARDS							
3855-82-1	1,4-Dichlorobenzene-d4	103289	6.62				
1146-65-2	Naphthalene-d8	428131	7.9				
15067-26-2	Acenaphthene-d10	174588	9.66				
1517-22-2	Phenanthrene-d10	248839	11.13				
1719-03-5	Chrysene-d12	210890	13.76				
1520-96-3	Perylene-d12	212956	15.14				

U = Not Detected
LOQ = Limit of Quantitation
MDL = Method Detection Limit
LOD = Limit of Detection
E = Value Exceeds Calibration Range
Q = indicates LCS control criteria did not meet requirements
M = MS/MSD acceptance criteria did not meet requirements

J = Estimated Value
B = Analyte Found in Associated Method Blank
N = Presumptive Evidence of a Compound
* = Values outside of QC limits
D = Dilution
() = Laboratory InHouse Limit

CHEMTECH 284 Sheffield Street, Mountainside, NJ 07092 Phone: 908 789 8900 Fax: 908 789 8922

Report of Analysis

Client:	LiRo Engineers, Inc.	Date Collected:	07/12/17
Project:	DDC OEGS - Cross Island Phase 2	Date Received:	07/13/17
Client Sample ID:	CI-SB4-0-2	SDG No.:	I4187
Lab Sample ID:	I4187-04	Matrix:	SOIL
Analytical Method:	SW8260	% Moisture:	9.3
Sample Wt/Vol:	5.01 Units: g	Final Vol:	5000 uL
Soil Aliquot Vol:	uL	Test:	VOCMS Group1
GC Column:	RTX-VMS ID : 0.18	Level :	LOW

File ID/Qc Batch:	Dilution:	Prep Date	Date Analyzed	Prep Batch ID
VF053630.D	1		07/14/17 19:38	VF071417

CAS Number	Parameter	Conc.	Qualifier	MDL	LOD	LOQ / CRQL	Units(Dry Weight)
TARGETS							
75-71-8	Dichlorodifluoromethane	0.55	U	0.55	0.55	5.5	ug/Kg
74-87-3	Chloromethane	0.55	U	0.55	0.55	5.5	ug/Kg
75-01-4	Vinyl Chloride	0.55	U	0.55	0.55	5.5	ug/Kg
74-83-9	Bromomethane	1.1	U	1.1	1.1	5.5	ug/Kg
75-00-3	Chloroethane	0.55	U	0.55	0.55	5.5	ug/Kg
75-69-4	Trichlorofluoromethane	0.55	UQ	0.55	0.55	5.5	ug/Kg
76-13-1	1,1,2-Trichlorotrifluoroethane	0.55	U	0.55	0.55	5.5	ug/Kg
75-65-0	Tert butyl alcohol	27.5	U	8.2	27.5	27.5	ug/Kg
75-35-4	1,1-Dichloroethene	0.55	UQ	0.55	0.55	5.5	ug/Kg
67-64-1	Acetone	2.8	U	2.8	2.8	27.5	ug/Kg
75-15-0	Carbon Disulfide	0.55	U	0.55	0.55	5.5	ug/Kg
1634-04-4	Methyl tert-butyl Ether	0.55	UQ	0.55	0.55	5.5	ug/Kg
79-20-9	Methyl Acetate	1.1	U	1.1	1.1	5.5	ug/Kg
75-09-2	Methylene Chloride	3.3	J	0.55	0.55	5.5	ug/Kg
156-60-5	trans-1,2-Dichloroethene	0.55	UQ	0.55	0.55	5.5	ug/Kg
75-34-3	1,1-Dichloroethane	0.55	UQ	0.55	0.55	5.5	ug/Kg
110-82-7	Cyclohexane	0.55	U	0.55	0.55	5.5	ug/Kg
78-93-3	2-Butanone	8.3	U	3.4	8.3	27.5	ug/Kg
56-23-5	Carbon Tetrachloride	0.55	U	0.55	0.55	5.5	ug/Kg
156-59-2	cis-1,2-Dichloroethene	0.55	U	0.55	0.55	5.5	ug/Kg
74-97-5	Bromochloromethane	0.55	U	0.55	0.55	5.5	ug/Kg
67-66-3	Chloroform	0.55	UQ	0.55	0.55	5.5	ug/Kg
71-55-6	1,1,1-Trichloroethane	0.55	U	0.55	0.55	5.5	ug/Kg
108-87-2	Methylcyclohexane	0.55	U	0.55	0.55	5.5	ug/Kg
71-43-2	Benzene	0.55	U	0.42	0.55	5.5	ug/Kg
107-06-2	1,2-Dichloroethane	0.55	UQ	0.55	0.55	5.5	ug/Kg
79-01-6	Trichloroethene	0.55	U	0.55	0.55	5.5	ug/Kg
78-87-5	1,2-Dichloropropane	0.55	U	0.29	0.55	5.5	ug/Kg
5-27-4	Bromodichloromethane	0.55	U	0.55	0.55	5.5	ug/Kg
108-10-1	4-Methyl-2-Pentanone	2.8	U	2.8	2.8	27.5	ug/Kg
108-88-3	Toluene	0.55	U	0.55	0.55	5.5	ug/Kg
10061-02-6	t-1,3-Dichloropropene	0.55	U	0.55	0.55	5.5	ug/Kg

CHEMTECH 284 Sheffield Street, Mountainside, NJ 07092 Phone: 908 789 8900 Fax: 908 789 8922

Report of Analysis

Client:	LiRo Engineers, Inc.	Date Collected:	07/12/17
Project:	DDC OEGS - Cross Island Phase 2	Date Received:	07/13/17
Client Sample ID:	CI-SB4-0-2	SDG No.:	I4187
Lab Sample ID:	I4187-04	Matrix:	SOIL
Analytical Method:	SW8260	% Moisture:	9.3
Sample Wt/Vol:	5.01 Units: g	Final Vol:	5000 uL
Soil Aliquot Vol:	uL	Test:	VOCMS Group1
GC Column:	RTX-VMS ID : 0.18	Level :	LOW

File ID/Qc Batch:	Dilution:	Prep Date	Date Analyzed	Prep Batch ID
VF053630.D	1		07/14/17 19:38	VF071417

CAS Number	Parameter	Conc.	Qualifier	MDL	LOD	LOQ / CRQL	Units(Dry Weight)
10061-01-5	cis-1,3-Dichloropropene	0.55	U	0.55	0.55	5.5	ug/Kg
79-00-5	1,1,2-Trichloroethane	1.1	U	0.99	1.1	5.5	ug/Kg
591-78-6	2-Hexanone	2.8	U	2.8	2.8	27.5	ug/Kg
124-48-1	Dibromochloromethane	0.55	U	0.55	0.55	5.5	ug/Kg
106-93-4	1,2-Dibromoethane	0.55	U	0.55	0.55	5.5	ug/Kg
127-18-4	Tetrachloroethene	0.55	U	0.55	0.55	5.5	ug/Kg
108-90-7	Chlorobenzene	0.55	U	0.55	0.55	5.5	ug/Kg
100-41-4	Ethyl Benzene	0.55	U	0.55	0.55	5.5	ug/Kg
179601-23-1	m/p-Xylenes	1.1	U	0.79	1.1	11	ug/Kg
95-47-6	o-Xylene	0.55	U	0.55	0.55	5.5	ug/Kg
100-42-5	Styrene	0.55	U	0.5	0.55	5.5	ug/Kg
75-25-2	Bromoform	1.7	U	0.81	1.7	5.5	ug/Kg
98-82-8	Isopropylbenzene	0.55	U	0.53	0.55	5.5	ug/Kg
79-34-5	1,1,2,2-Tetrachloroethane	0.55	U	0.51	0.55	5.5	ug/Kg
541-73-1	1,3-Dichlorobenzene	0.55	U	0.41	0.55	5.5	ug/Kg
106-46-7	1,4-Dichlorobenzene	0.55	U	0.45	0.55	5.5	ug/Kg
95-50-1	1,2-Dichlorobenzene	0.55	U	0.55	0.55	5.5	ug/Kg
96-12-8	1,2-Dibromo-3-Chloropropane	5.5	U	0.96	5.5	5.5	ug/Kg
120-82-1	1,2,4-Trichlorobenzene	0.55	U	0.55	0.55	5.5	ug/Kg
87-61-6	1,2,3-Trichlorobenzene	1.1	U	0.55	1.1	5.5	ug/Kg
SURROGATES							
17060-07-0	1,2-Dichloroethane-d4	40.6		56 - 120		81%	SPK: 50
1868-53-7	Dibromofluoromethane	51.8		57 - 135		104%	SPK: 50
2037-26-5	Toluene-d8	50.2		67 - 123		100%	SPK: 50
460-00-4	4-Bromofluorobenzene	41.9		33 - 141		84%	SPK: 50
INTERNAL STANDARDS							
363-72-4	Pentafluorobenzene	459931	4.82				
540-36-3	1,4-Difluorobenzene	839405	5.54				
3114-55-4	Chlorobenzene-d5	696661	9.71				
3855-82-1	1,4-Dichlorobenzene-d4	287818	12.5				

CHEMTECH 284 Sheffield Street, Mountainside, NJ 07092 Phone: 908 789 8900 Fax: 908 789 8922

Report of Analysis

Client:	LiRo Engineers, Inc.	Date Collected:	07/12/17
Project:	DDC OEGS - Cross Island Phase 2	Date Received:	07/13/17
Client Sample ID:	CI-SB4-0-2	SDG No.:	I4187
Lab Sample ID:	I4187-04	Matrix:	SOIL
Analytical Method:	SW8260	% Moisture:	9.3
Sample Wt/Vol:	5.01 Units: g	Final Vol:	5000 uL
Soil Aliquot Vol:	uL	Test:	VOCMS Group1
GC Column:	RTX-VMS ID : 0.18	Level :	LOW

File ID/Qc Batch:	Dilution:	Prep Date	Date Analyzed	Prep Batch ID
VF053630.D	1		07/14/17 19:38	VF071417

CAS Number	Parameter	Conc.	Qualifier	MDL	LOD	LOQ / CRQL	Units

U = Not Detected
LOQ = Limit of Quantitation
MDL = Method Detection Limit
LOD = Limit of Detection
E = Value Exceeds Calibration Range
Q = indicates LCS control criteria did not meet requirements
M = MS/MSD acceptance criteria did not meet requirements

J = Estimated Value
B = Analyte Found in Associated Method Blank
N = Presumptive Evidence of a Compound
* = Values outside of QC limits
D = Dilution
() = Laboratory InHouse Limit

CHEMTECH 284 Sheffield Street, Mountainside, NJ 07092 Phone: 908 789 8900 Fax: 908 789 8922

Report of Analysis

Client:	LiRo Engineers, Inc.	Date Collected:	07/12/17
Project:	DDC OEGS - Cross Island Phase 2	Date Received:	07/13/17
Client Sample ID:	CI-SB5-0-2	SDG No.:	I4187
Lab Sample ID:	I4187-05	Matrix:	SOIL
Level (low/med):	low	% Solid:	96.1

Cas	Parameter	Conc.	Qua.	DF	MDL	LOD	LOQ / CRQL	Units(Dry Weight)	Prep Date	Date Ana.	Ana Met.
7429-90-5	Aluminum	2490		1	0.747	1.11	4.45	mg/Kg	07/14/17 10:05	07/17/17 14:54	SW6010
7440-36-0	Antimony	0.556	UN	1	0.498	0.556	2.22	mg/Kg	07/14/17 10:05	07/17/17 14:54	SW6010
7440-38-2	Arsenic	1.31		1	0.222	0.222	0.889	mg/Kg	07/14/17 10:05	07/17/17 14:54	SW6010
7440-39-3	Barium	18.9		1	0.356	1.11	4.45	mg/Kg	07/14/17 10:05	07/17/17 14:54	SW6010
7440-41-7	Beryllium	0.15	J	1	0.053	0.067	0.267	mg/Kg	07/14/17 10:05	07/17/17 14:54	SW6010
7440-43-9	Cadmium	0.07	J	1	0.053	0.067	0.267	mg/Kg	07/14/17 10:05	07/17/17 14:54	SW6010
7440-70-2	Calcium	562		1	0.952	22.2	88.9	mg/Kg	07/14/17 10:05	07/17/17 14:54	SW6010
7440-47-3	Chromium	6.34		1	0.111	0.111	0.445	mg/Kg	07/14/17 10:05	07/17/17 14:54	SW6010
7440-48-4	Cobalt	3.31		1	0.334	0.334	1.33	mg/Kg	07/14/17 10:05	07/17/17 14:54	SW6010
7440-50-8	Copper	9.09		1	0.222	0.222	0.889	mg/Kg	07/14/17 10:05	07/17/17 14:54	SW6010
7439-89-6	Iron	9870		1	1.11	1.11	4.45	mg/Kg	07/14/17 10:05	07/17/17 14:54	SW6010
7439-92-1	Lead	12.3		1	0.107	0.222	0.534	mg/Kg	07/14/17 10:05	07/17/17 14:54	SW6010
7439-95-4	Magnesium	849		1	4.07	22.2	88.9	mg/Kg	07/14/17 10:05	07/17/17 14:54	SW6010
7439-96-5	Manganese	178		1	0.169	0.222	0.889	mg/Kg	07/14/17 10:05	07/17/17 14:54	SW6010
7439-97-6	Mercury	0.023		1	0.006	0.006	0.013	mg/Kg	07/17/17 12:53	07/18/17 10:13	SW7471A
7440-02-0	Nickel	16.2		1	0.409	0.445	1.78	mg/Kg	07/14/17 10:05	07/17/17 14:54	SW6010
7440-09-7	Potassium	247		1	3.11	22.2	88.9	mg/Kg	07/14/17 10:05	07/17/17 14:54	SW6010
7782-49-2	Selenium	3.85		1	0.222	0.222	0.889	mg/Kg	07/14/17 10:05	07/17/17 14:54	SW6010
7440-22-4	Silver	0.703		1	0.111	0.111	0.445	mg/Kg	07/14/17 10:05	07/17/17 14:54	SW6010
7440-23-5	Sodium	36.1	J	1	2.24	22.2	88.9	mg/Kg	07/14/17 10:05	07/17/17 14:54	SW6010
7440-28-0	Thallium	0.253	J	1	0.24	0.445	1.78	mg/Kg	07/14/17 10:05	07/17/17 14:54	SW6010
7440-62-2	Vanadium	14.2		1	0.445	0.445	1.78	mg/Kg	07/14/17 10:05	07/17/17 14:54	SW6010
7440-66-6	Zinc	29.1		1	0.445	0.445	1.78	mg/Kg	07/14/17 10:05	07/17/17 14:54	SW6010

Color Before:	Brown	Clarity Before:		Texture:	Medium
Color After:	Yellow	Clarity After:		Artifacts:	No
Comments:	METALS-TAL				

U = Not Detected
LOQ = Limit of Quantitation
MDL = Method Detection Limit
LOD = Limit of Detection
D = Dilution
Q = indicates LCS control criteria did not meet requirements

J = Estimated Value
B = Analyte Found in Associated Method Blank
* = indicates the duplicate analysis is not within control limits.
E = Indicates the reported value is estimated because of the presence of interference.
OR = Over Range
N =Spiked sample recovery not within control limits

CHEMTECH 284 Sheffield Street, Mountainside, NJ 07092 Phone: 908 789 8900 Fax: 908 789 8922

Report of Analysis

Client:	LiRo Engineers, Inc.	Date Collected:	07/12/17
Project:	DDC OEGS - Cross Island Phase 2	Date Received:	07/13/17
Client Sample ID:	CI-SB5-0-2	SDG No.:	I4187
Lab Sample ID:	I4187-05	Matrix:	SOIL
Analytical Method:	SW8082A	% Moisture:	3.9 Decanted:
Sample Wt/Vol:	30.12 Units: g	Final Vol:	10000 uL
Soil Aliquot Vol:	uL	Test:	PCB
Extraction Type:		Injection Volume :	
GPC Factor :	1.0 PH :		

File ID/Qc Batch:	Dilution:	Prep Date	Date Analyzed	Prep Batch ID
PQ019426.D	1	07/14/17 10:55	07/18/17 16:34	PB100661

CAS Number	Parameter	Conc.	Qualifier	MDL	LOD	LOQ / CRQL	Units(Dry Weight)
TARGETS							
12674-11-2	Aroclor-1016	3.5	U	3.5	3.5	17.6	ug/kg
11104-28-2	Aroclor-1221	3.5	U	3.5	3.5	17.6	ug/kg
11141-16-5	Aroclor-1232	3.5	U	3.5	3.5	17.6	ug/kg
53469-21-9	Aroclor-1242	3.5	U	3.5	3.5	17.6	ug/kg
12672-29-6	Aroclor-1248	3.5	U	3.5	3.5	17.6	ug/kg
11097-69-1	Aroclor-1254	3.5	U	1.5	3.5	17.6	ug/kg
37324-23-5	Aroclor-1262	3.5	U	3.5	3.5	17.6	ug/kg
11100-14-4	Aroclor-1268	3.5	U	3.5	3.5	17.6	ug/kg
11096-82-5	Aroclor-1260	3.5	U	3.5	3.5	17.6	ug/kg
SURROGATES							
877-09-8	Tetrachloro-m-xylene	22.8		10 - 166		112%	SPK: 20
2051-24-3	Decachlorobiphenyl	17.4		60 - 125		87%	SPK: 20

Comments:

U = Not Detected
LOQ = Limit of Quantitation
MDL = Method Detection Limit
LOD = Limit of Detection
E = Value Exceeds Calibration Range
P = Indicates >25% difference for detected concentrations between the two GC columns
Q = indicates LCS control criteria did not meet requirements
M = MS/MSD acceptance criteria did not meet requirements

J = Estimated Value
B = Analyte Found in Associated Method Blank
N = Presumptive Evidence of a Compound
* = Values outside of QC limits
D = Dilution
S = Indicates estimated value where valid five-point calibration was not performed prior to analyte detection in sample.
() = Laboratory InHouse Limit

CHEMTECH 284 Sheffield Street, Mountainside, NJ 07092 Phone: 908 789 8900 Fax: 908 789 8922

Report of Analysis

Client:	LiRo Engineers, Inc.	Date Collected:	07/12/17
Project:	DDC OEGS - Cross Island Phase 2	Date Received:	07/13/17
Client Sample ID:	CI-SB5-0-2	SDG No.:	I4187
Lab Sample ID:	I4187-05	Matrix:	SOIL
Analytical Method:	SW8081	% Moisture:	3.9 Decanted:
Sample Wt/Vol:	30.12 Units: g	Final Vol:	10000 uL
Soil Aliquot Vol:	uL	Test:	PESTICIDE Group1
Extraction Type:		Injection Volume :	
GPC Factor :	1.0 PH :		

File ID/Qc Batch:	Dilution:	Prep Date	Date Analyzed	Prep Batch ID
PL027276.D	1	07/14/17 08:10	07/14/17 18:35	PB100634

CAS Number	Parameter	Conc.	Qualifier	MDL	LOD	LOQ / CRQL	Units(Dry Weight)
TARGETS							
319-84-6	alpha-BHC	0.342	U	0.135	0.342	1.8	ug/kg
319-85-7	beta-BHC	0.342	U	0.187	0.342	1.8	ug/kg
319-86-8	delta-BHC	0.342	U	0.104	0.342	1.8	ug/kg
58-89-9	gamma-BHC (Lindane)	0.342	U	0.156	0.342	1.8	ug/kg
76-44-8	Heptachlor	0.342	U	0.145	0.342	1.8	ug/kg
309-00-2	Aldrin	0.342	U	0.104	0.342	1.8	ug/kg
1024-57-3	Heptachlor epoxide	0.342	U	0.166	0.342	1.8	ug/kg
959-98-8	Endosulfan I	0.342	U	0.156	0.342	1.8	ug/kg
60-57-1	Dieldrin	0.342	U	0.135	0.342	1.8	ug/kg
72-55-9	4,4-DDE	0.342	U	0.207	0.342	1.8	ug/kg
72-20-8	Endrin	0.342	U	0.187	0.342	1.8	ug/kg
33213-65-9	Endosulfan II	0.342	U	0.145	0.342	1.8	ug/kg
72-54-8	4,4-DDD	0.342	U	0.176	0.342	1.8	ug/kg
1031-07-8	Endosulfan Sulfate	0.342	U	0.156	0.342	1.8	ug/kg
50-29-3	4,4-DDT	0.342	U	0.145	0.342	1.8	ug/kg
72-43-5	Methoxychlor	0.342	U	0.176	0.342	1.8	ug/kg
53494-70-5	Endrin ketone	0.342	U	0.135	0.342	1.8	ug/kg
7421-93-4	Endrin aldehyde	0.342	U	0.156	0.342	1.8	ug/kg
5103-71-9	alpha-Chlordane	0.342	U	0.145	0.342	1.8	ug/kg
5103-74-2	gamma-Chlordane	0.342	U	0.135	0.342	1.8	ug/kg
8001-35-2	Toxaphene	3.5	U	3.5	3.5	17.6	ug/kg
SURROGATES							
2051-24-3	Decachlorobiphenyl	15.6		10 - 169		78%	SPK: 20
877-09-8	Tetrachloro-m-xylene	13		31 - 151		65%	SPK: 20

CHEMTECH 284 Sheffield Street, Mountainside, NJ 07092 Phone: 908 789 8900 Fax: 908 789 8922

Report of Analysis

Client:	LiRo Engineers, Inc.	Date Collected:	07/12/17
Project:	DDC OEGS - Cross Island Phase 2	Date Received:	07/13/17
Client Sample ID:	CI-SB5-0-2	SDG No.:	I4187
Lab Sample ID:	I4187-05	Matrix:	SOIL
Analytical Method:	SW8081	% Moisture:	3.9 Decanted:
Sample Wt/Vol:	30.12 Units: g	Final Vol:	10000 uL
Soil Aliquot Vol:	uL	Test:	PESTICIDE Group1
Extraction Type:		Injection Volume :	
GPC Factor :	1.0 PH :		

File ID/Qc Batch:	Dilution:	Prep Date	Date Analyzed	Prep Batch ID
PL027276.D	1	07/14/17 08:10	07/14/17 18:35	PB100634

CAS Number	Parameter	Conc.	Qualifier	MDL	LOD	LOQ / CRQL	Units

Comments:

U = Not Detected
LOQ = Limit of Quantitation
MDL = Method Detection Limit
LOD = Limit of Detection
E = Value Exceeds Calibration Range
P = Indicates >25% difference for detected concentrations between the two GC columns
Q = indicates LCS control criteria did not meet requirements
M = MS/MSD acceptance criteria did not meet requirements

J = Estimated Value
B = Analyte Found in Associated Method Blank
N = Presumptive Evidence of a Compound
* = Values outside of QC limits
D = Dilution
S = Indicates estimated value where valid five-point calibration was not performed prior to analyte detection in sample.
() = Laboratory InHouse Limit

CHEMTECH 284 Sheffield Street, Mountainside, NJ 07092 Phone: 908 789 8900 Fax: 908 789 8922

Report of Analysis

Client:	LiRo Engineers, Inc.	Date Collected:	07/12/17
Project:	DDC OEGS - Cross Island Phase 2	Date Received:	07/13/17
Client Sample ID:	CI-SB5-0-2	SDG No.:	I4187
Lab Sample ID:	I4187-05	Matrix:	SOIL
Analytical Method:	SW8270	% Moisture:	3.9
Sample Wt/Vol:	30.09 Units: g	Final Vol:	1000 uL
Soil Aliquot Vol:	uL	Test:	SVOCMS Group1
Extraction Type :	Decanted : N	Level :	LOW
Injection Volume :	GPC Factor : 1.0	GPC Cleanup :	N PH :

File ID/Qc Batch:	Dilution:	Prep Date	Date Analyzed	Prep Batch ID
BF096795.D	1	07/14/17 09:53	07/15/17 02:15	PB100644

CAS Number	Parameter	Conc.	Qualifier	MDL	LOD	LOQ / CRQL	Units(Dry Weight)
TARGETS							
100-52-7	Benzaldehyde	34.6	U	18.1	34.6	340	ug/Kg
108-95-2	Phenol	34.6	U	8	34.6	340	ug/Kg
111-44-4	bis(2-Chloroethyl)ether	34.6	U	16.6	34.6	340	ug/Kg
95-57-8	2-Chlorophenol	34.6	U	18.3	34.6	340	ug/Kg
95-48-7	2-Methylphenol	34.6	U	18.8	34.6	340	ug/Kg
108-60-1	2,2-oxybis(1-Chloropropane)	34.6	U	14.3	34.6	340	ug/Kg
98-86-2	Acetophenone	34.6	U	10.6	34.6	340	ug/Kg
65794-96-9	3+4-Methylphenols	34.6	U	17.9	34.6	340	ug/Kg
621-64-7	n-Nitroso-di-n-propylamine	34.6	U	17.4	34.6	340	ug/Kg
67-72-1	Hexachloroethane	34.6	U	15.5	34.6	340	ug/Kg
98-95-3	Nitrobenzene	34.6	U	13.1	34.6	340	ug/Kg
78-59-1	Isophorone	34.6	U	11.4	34.6	340	ug/Kg
88-75-5	2-Nitrophenol	34.6	U	16.7	34.6	340	ug/Kg
105-67-9	2,4-Dimethylphenol	34.6	U	19.6	34.6	340	ug/Kg
111-91-1	bis(2-Chloroethoxy)methane	34.6	U	19.9	34.6	340	ug/Kg
120-83-2	2,4-Dichlorophenol	34.6	U	13.2	34.6	340	ug/Kg
91-20-3	Naphthalene	34.6	U	11.9	34.6	340	ug/Kg
106-47-8	4-Chloroaniline	34.6	U	24.4	34.6	340	ug/Kg
87-68-3	Hexachlorobutadiene	34.6	U	12.6	34.6	340	ug/Kg
105-60-2	Caprolactam	69.2	U	16.1	69.2	340	ug/Kg
59-50-7	4-Chloro-3-methylphenol	34.6	U	15.4	34.6	340	ug/Kg
91-57-6	2-Methylnaphthalene	34.6	U	8.7	34.6	340	ug/Kg
77-47-4	Hexachlorocyclopentadiene	34.6	U	8.4	34.6	340	ug/Kg
88-06-2	2,4,6-Trichlorophenol	34.6	U	10.6	34.6	340	ug/Kg
95-95-4	2,4,5-Trichlorophenol	34.6	U	24.3	34.6	340	ug/Kg
92-52-4	1,1-Biphenyl	34.6	U	13.1	34.6	340	ug/Kg
91-58-7	2-Chloronaphthalene	34.6	U	7.9	34.6	340	ug/Kg
88-74-4	2-Nitroaniline	34.6	U	15.4	34.6	340	ug/Kg
131-11-3	Dimethylphthalate	490		9.3	34.6	340	ug/Kg
208-96-8	Acenaphthylene	34.6	U	8.7	34.6	340	ug/Kg
606-20-2	2,6-Dinitrotoluene	34.6	U	14.1	34.6	340	ug/Kg

CHEMTECH 284 Sheffield Street, Mountainside, NJ 07092 Phone: 908 789 8900 Fax: 908 789 8922

Report of Analysis

Client:	LiRo Engineers, Inc.	Date Collected:	07/12/17
Project:	DDC OEGS - Cross Island Phase 2	Date Received:	07/13/17
Client Sample ID:	CI-SB5-0-2	SDG No.:	I4187
Lab Sample ID:	I4187-05	Matrix:	SOIL
Analytical Method:	SW8270	% Moisture:	3.9
Sample Wt/Vol:	30.09 Units: g	Final Vol:	1000 uL
Soil Aliquot Vol:	uL	Test:	SVOCMS Group1
Extraction Type :	Decanted : N	Level :	LOW
Injection Volume :	GPC Factor : 1.0	GPC Cleanup :	N PH :

File ID/Qc Batch:	Dilution:	Prep Date	Date Analyzed	Prep Batch ID
BF096795.D	1	07/14/17 09:53	07/15/17 02:15	PB100644

CAS Number	Parameter	Conc.	Qualifier	MDL	LOD	LOQ / CRQL	Units(Dry Weight)
99-09-2	3-Nitroaniline	69.2	U	22.2	69.2	340	ug/Kg
83-32-9	Acenaphthene	34.6	U	9.8	34.6	340	ug/Kg
51-28-5	2,4-Dinitrophenol	280	U	35.2	280	340	ug/Kg
100-02-7	4-Nitrophenol	170	U	64.2	170	340	ug/Kg
132-64-9	Dibenzofuran	34.6	U	13.5	34.6	340	ug/Kg
121-14-2	2,4-Dinitrotoluene	34.6	U	10.4	34.6	340	ug/Kg
84-66-2	Diethylphthalate	34.6	U	5.4	34.6	340	ug/Kg
7005-72-3	4-Chlorophenyl-phenylether	34.6	U	18.8	34.6	340	ug/Kg
86-73-7	Fluorene	34.6	U	13.1	34.6	340	ug/Kg
100-01-6	4-Nitroaniline	69.2	UQ	45	69.2	340	ug/Kg
534-52-1	4,6-Dinitro-2-methylphenol	170	U	19.8	170	340	ug/Kg
86-30-6	n-Nitrosodiphenylamine	34.6	U	8.3	34.6	340	ug/Kg
101-55-3	4-Bromophenyl-phenylether	34.6	U	6.7	34.6	340	ug/Kg
118-74-1	Hexachlorobenzene	34.6	U	14.1	34.6	340	ug/Kg
1912-24-9	Atrazine	34.6	U	18.3	34.6	340	ug/Kg
87-86-5	Pentachlorophenol	34.6	U	23.7	34.6	340	ug/Kg
85-01-8	Phenanthrene	34.6	U	9.3	34.6	340	ug/Kg
120-12-7	Anthracene	34.6	U	7.1	34.6	340	ug/Kg
86-74-8	Carbazole	34.6	U	7.6	34.6	340	ug/Kg
84-74-2	Di-n-butylphthalate	34.6	U	27.2	34.6	340	ug/Kg
206-44-0	Fluoranthene	34.6	U	7	34.6	340	ug/Kg
129-00-0	Pyrene	34.6	U	8.3	34.6	340	ug/Kg
85-68-7	Butylbenzylphthalate	34.6	UQ	16.6	34.6	340	ug/Kg
91-94-1	3,3-Dichlorobenzidine	34.6	U	22.2	34.6	340	ug/Kg
56-55-3	Benzo(a)anthracene	34.6	U	16.5	34.6	340	ug/Kg
218-01-9	Chrysene	34.6	U	15.7	34.6	340	ug/Kg
117-81-7	Bis(2-ethylhexyl)phthalate	34.6	U	12.2	34.6	340	ug/Kg
117-84-0	Di-n-octyl phthalate	34.6	U	3.9	34.6	340	ug/Kg
205-99-2	Benzo(b)fluoranthene	34.6	U	11.3	34.6	340	ug/Kg
207-08-9	Benzo(k)fluoranthene	34.6	U	16.3	34.6	340	ug/Kg
50-32-8	Benzo(a)pyrene	34.6	U	7.5	34.6	340	ug/Kg
193-39-5	Indeno(1,2,3-cd)pyrene	140	J	11.5	34.6	340	ug/Kg
53-70-3	Dibenzo(a,h)anthracene	34.6	U	10	34.6	340	ug/Kg

CHEMTECH 284 Sheffield Street, Mountainside, NJ 07092 Phone: 908 789 8900 Fax: 908 789 8922

Report of Analysis

Client:	LiRo Engineers, Inc.	Date Collected:	07/12/17
Project:	DDC OEGS - Cross Island Phase 2	Date Received:	07/13/17
Client Sample ID:	CI-SB5-0-2	SDG No.:	I4187
Lab Sample ID:	I4187-05	Matrix:	SOIL
Analytical Method:	SW8270	% Moisture:	3.9
Sample Wt/Vol:	30.09 Units: g	Final Vol:	1000 uL
Soil Aliquot Vol:	uL	Test:	SVOCMS Group1
Extraction Type :	Decanted : N	Level :	LOW
Injection Volume :	GPC Factor : 1.0	GPC Cleanup :	N PH :

File ID/Qc Batch:	Dilution:	Prep Date	Date Analyzed	Prep Batch ID
BF096795.D	1	07/14/17 09:53	07/15/17 02:15	PB100644

CAS Number	Parameter	Conc.	Qualifier	MDL	LOD	LOQ / CRQL	Units(Dry Weight)
191-24-2	Benzo(g,h,i)perylene	34.6	U	14	34.6	340	ug/Kg
95-94-3	1,2,4,5-Tetrachlorobenzene	34.6	U	13.6	34.6	340	ug/Kg
123-91-1	1,4-Dioxane	69.2	U	13.6	69.2	340	ug/Kg
58-90-2	2,3,4,6-Tetrachlorophenol	34.6	U	13.6	34.6	340	ug/Kg
SURROGATES							
367-12-4	2-Fluorophenol	100		28 - 127		68%	SPK: 150
13127-88-3	Phenol-d6	97.5		34 - 127		65%	SPK: 150
4165-60-0	Nitrobenzene-d5	64.6		31 - 132		65%	SPK: 100
321-60-8	2-Fluorobiphenyl	69.2		39 - 123		69%	SPK: 100
118-79-6	2,4,6-Tribromophenol	89.8		30 - 133		60%	SPK: 150
1718-51-0	Terphenyl-d14	34.3	*	37 - 115		34%	SPK: 100
INTERNAL STANDARDS							
3855-82-1	1,4-Dichlorobenzene-d4	100001	6.62				
1146-65-2	Naphthalene-d8	413793	7.9				
15067-26-2	Acenaphthene-d10	166060	9.65				
1517-22-2	Phenanthrene-d10	252425	11.13				
1719-03-5	Chrysene-d12	211420	13.76				
1520-96-3	Perylene-d12	200237	15.14				

U = Not Detected
LOQ = Limit of Quantitation
MDL = Method Detection Limit
LOD = Limit of Detection
E = Value Exceeds Calibration Range
Q = indicates LCS control criteria did not meet requirements
M = MS/MSD acceptance criteria did not meet requirements

J = Estimated Value
B = Analyte Found in Associated Method Blank
N = Presumptive Evidence of a Compound
* = Values outside of QC limits
D = Dilution
() = Laboratory InHouse Limit

CHEMTECH 284 Sheffield Street, Mountainside, NJ 07092 Phone: 908 789 8900 Fax: 908 789 8922

Report of Analysis

Client:	LiRo Engineers, Inc.	Date Collected:	07/12/17
Project:	DDC OEGS - Cross Island Phase 2	Date Received:	07/13/17
Client Sample ID:	CI-SB5-0-2	SDG No.:	I4187
Lab Sample ID:	I4187-05	Matrix:	SOIL
Analytical Method:	SW8260	% Moisture:	3.9
Sample Wt/Vol:	5 Units: g	Final Vol:	5000 uL
Soil Aliquot Vol:	uL	Test:	VOCMS Group1
GC Column:	RTX-VMS ID : 0.18	Level :	LOW

File ID/Qc Batch:	Dilution:	Prep Date	Date Analyzed	Prep Batch ID
VF053631.D	1		07/14/17 20:07	VF071417

CAS Number	Parameter	Conc.	Qualifier	MDL	LOD	LOQ / CRQL	Units(Dry Weight)
TARGETS							
75-71-8	Dichlorodifluoromethane	0.52	U	0.52	0.52	5.2	ug/Kg
74-87-3	Chloromethane	0.52	U	0.52	0.52	5.2	ug/Kg
75-01-4	Vinyl Chloride	0.52	U	0.52	0.52	5.2	ug/Kg
74-83-9	Bromomethane	1	U	1	1	5.2	ug/Kg
75-00-3	Chloroethane	0.52	U	0.52	0.52	5.2	ug/Kg
75-69-4	Trichlorofluoromethane	0.52	UQ	0.52	0.52	5.2	ug/Kg
76-13-1	1,1,2-Trichlorotrifluoroethane	0.52	U	0.52	0.52	5.2	ug/Kg
75-65-0	Tert butyl alcohol	26	U	7.7	26	26	ug/Kg
75-35-4	1,1-Dichloroethene	0.52	UQ	0.52	0.52	5.2	ug/Kg
67-64-1	Acetone	2.6	U	2.6	2.6	26	ug/Kg
75-15-0	Carbon Disulfide	0.52	U	0.52	0.52	5.2	ug/Kg
1634-04-4	Methyl tert-butyl Ether	0.52	UQ	0.52	0.52	5.2	ug/Kg
79-20-9	Methyl Acetate	1	U	1	1	5.2	ug/Kg
75-09-2	Methylene Chloride	3.1	J	0.52	0.52	5.2	ug/Kg
156-60-5	trans-1,2-Dichloroethene	0.52	UQ	0.52	0.52	5.2	ug/Kg
75-34-3	1,1-Dichloroethane	0.52	UQ	0.52	0.52	5.2	ug/Kg
110-82-7	Cyclohexane	0.52	U	0.52	0.52	5.2	ug/Kg
78-93-3	2-Butanone	7.8	U	3.2	7.8	26	ug/Kg
56-23-5	Carbon Tetrachloride	0.52	U	0.52	0.52	5.2	ug/Kg
156-59-2	cis-1,2-Dichloroethene	0.52	U	0.52	0.52	5.2	ug/Kg
74-97-5	Bromochloromethane	0.52	U	0.52	0.52	5.2	ug/Kg
67-66-3	Chloroform	0.52	UQ	0.52	0.52	5.2	ug/Kg
71-55-6	1,1,1-Trichloroethane	0.52	U	0.52	0.52	5.2	ug/Kg
108-87-2	Methylcyclohexane	0.52	U	0.52	0.52	5.2	ug/Kg
71-43-2	Benzene	0.52	U	0.4	0.52	5.2	ug/Kg
107-06-2	1,2-Dichloroethane	0.52	UQ	0.52	0.52	5.2	ug/Kg
79-01-6	Trichloroethene	0.52	U	0.52	0.52	5.2	ug/Kg
78-87-5	1,2-Dichloropropane	0.52	U	0.27	0.52	5.2	ug/Kg
5-27-4	Bromodichloromethane	0.52	U	0.52	0.52	5.2	ug/Kg
108-10-1	4-Methyl-2-Pentanone	2.6	U	2.6	2.6	26	ug/Kg
108-88-3	Toluene	0.52	U	0.52	0.52	5.2	ug/Kg
10061-02-6	t-1,3-Dichloropropene	0.52	U	0.52	0.52	5.2	ug/Kg

CHEMTECH 284 Sheffield Street, Mountainside, NJ 07092 Phone: 908 789 8900 Fax: 908 789 8922

Report of Analysis

Client:	LiRo Engineers, Inc.	Date Collected:	07/12/17
Project:	DDC OEGS - Cross Island Phase 2	Date Received:	07/13/17
Client Sample ID:	CI-SB5-0-2	SDG No.:	I4187
Lab Sample ID:	I4187-05	Matrix:	SOIL
Analytical Method:	SW8260	% Moisture:	3.9
Sample Wt/Vol:	5 Units: g	Final Vol:	5000 uL
Soil Aliquot Vol:	uL	Test:	VOCMS Group1
GC Column:	RTX-VMS ID : 0.18	Level :	LOW

File ID/Qc Batch:	Dilution:	Prep Date	Date Analyzed	Prep Batch ID
VF053631.D	1		07/14/17 20:07	VF071417

CAS Number	Parameter	Conc.	Qualifier	MDL	LOD	LOQ / CRQL	Units(Dry Weight)
10061-01-5	cis-1,3-Dichloropropene	0.52	U	0.52	0.52	5.2	ug/Kg
79-00-5	1,1,2-Trichloroethane	1	U	0.94	1	5.2	ug/Kg
591-78-6	2-Hexanone	2.6	U	2.6	2.6	26	ug/Kg
124-48-1	Dibromochloromethane	0.52	U	0.52	0.52	5.2	ug/Kg
106-93-4	1,2-Dibromoethane	0.52	U	0.52	0.52	5.2	ug/Kg
127-18-4	Tetrachloroethene	0.52	U	0.52	0.52	5.2	ug/Kg
108-90-7	Chlorobenzene	0.52	U	0.52	0.52	5.2	ug/Kg
100-41-4	Ethyl Benzene	0.52	U	0.52	0.52	5.2	ug/Kg
179601-23-1	m/p-Xylenes	1	U	0.75	1	10.4	ug/Kg
95-47-6	o-Xylene	0.52	U	0.52	0.52	5.2	ug/Kg
100-42-5	Styrene	0.52	U	0.47	0.52	5.2	ug/Kg
75-25-2	Bromoform	1.6	U	0.77	1.6	5.2	ug/Kg
98-82-8	Isopropylbenzene	0.52	U	0.5	0.52	5.2	ug/Kg
79-34-5	1,1,2,2-Tetrachloroethane	0.52	U	0.48	0.52	5.2	ug/Kg
541-73-1	1,3-Dichlorobenzene	0.52	U	0.39	0.52	5.2	ug/Kg
106-46-7	1,4-Dichlorobenzene	0.52	U	0.43	0.52	5.2	ug/Kg
95-50-1	1,2-Dichlorobenzene	0.52	U	0.52	0.52	5.2	ug/Kg
96-12-8	1,2-Dibromo-3-Chloropropane	5.2	U	0.91	5.2	5.2	ug/Kg
120-82-1	1,2,4-Trichlorobenzene	0.52	U	0.52	0.52	5.2	ug/Kg
87-61-6	1,2,3-Trichlorobenzene	1	U	0.52	1	5.2	ug/Kg
SURROGATES							
17060-07-0	1,2-Dichloroethane-d4	33.2		56 - 120		66%	SPK: 50
1868-53-7	Dibromofluoromethane	43.6		57 - 135		87%	SPK: 50
2037-26-5	Toluene-d8	41.4		67 - 123		83%	SPK: 50
460-00-4	4-Bromofluorobenzene	33.9		33 - 141		68%	SPK: 50
INTERNAL STANDARDS							
363-72-4	Pentafluorobenzene	481099	4.81				
540-36-3	1,4-Difluorobenzene	891707	5.54				
3114-55-4	Chlorobenzene-d5	704296	9.7				
3855-82-1	1,4-Dichlorobenzene-d4	295677	12.49				

CHEMTECH 284 Sheffield Street, Mountainside, NJ 07092 Phone: 908 789 8900 Fax: 908 789 8922

Report of Analysis

Client:	LiRo Engineers, Inc.	Date Collected:	07/12/17
Project:	DDC OEGS - Cross Island Phase 2	Date Received:	07/13/17
Client Sample ID:	CI-SB5-0-2	SDG No.:	I4187
Lab Sample ID:	I4187-05	Matrix:	SOIL
Analytical Method:	SW8260	% Moisture:	3.9
Sample Wt/Vol:	5 Units: g	Final Vol:	5000 uL
Soil Aliquot Vol:	uL	Test:	VOCMS Group1
GC Column:	RTX-VMS ID : 0.18	Level :	LOW

File ID/Qc Batch:	Dilution:	Prep Date	Date Analyzed	Prep Batch ID
VF053631.D	1		07/14/17 20:07	VF071417

CAS Number	Parameter	Conc.	Qualifier	MDL	LOD	LOQ / CRQL	Units

U = Not Detected
LOQ = Limit of Quantitation
MDL = Method Detection Limit
LOD = Limit of Detection
E = Value Exceeds Calibration Range
Q = indicates LCS control criteria did not meet requirements
M = MS/MSD acceptance criteria did not meet requirements

J = Estimated Value
B = Analyte Found in Associated Method Blank
N = Presumptive Evidence of a Compound
* = Values outside of QC limits
D = Dilution
() = Laboratory InHouse Limit

CHEMTECH 284 Sheffield Street, Mountainside, NJ 07092 Phone: 908 789 8900 Fax: 908 789 8922

Report of Analysis

Client:	LiRo Engineers, Inc.	Date Collected:	07/12/17
Project:	DDC OEGS - Cross Island Phase 2	Date Received:	07/13/17
Client Sample ID:	CI-SB6-0-2	SDG No.:	I4187
Lab Sample ID:	I4187-06	Matrix:	SOIL
Level (low/med):	low	% Solid:	93.2

Cas	Parameter	Conc.	Qua.	DF	MDL	LOD	LOQ / CRQL	Units(Dry Weight)	Prep Date	Date Ana.	Ana Met.
7429-90-5	Aluminum	3810		1	0.742	1.1	4.42	mg/Kg	07/14/17 10:05	07/17/17 14:59	SW6010
7440-36-0	Antimony	0.552	UN	1	0.495	0.552	2.21	mg/Kg	07/14/17 10:05	07/17/17 14:59	SW6010
7440-38-2	Arsenic	2.29		1	0.221	0.221	0.883	mg/Kg	07/14/17 10:05	07/17/17 14:59	SW6010
7440-39-3	Barium	20.8		1	0.353	1.1	4.42	mg/Kg	07/14/17 10:05	07/17/17 14:59	SW6010
7440-41-7	Beryllium	0.174	J	1	0.053	0.066	0.265	mg/Kg	07/14/17 10:05	07/17/17 14:59	SW6010
7440-43-9	Cadmium	0.198	J	1	0.053	0.066	0.265	mg/Kg	07/14/17 10:05	07/17/17 14:59	SW6010
7440-70-2	Calcium	771		1	0.945	22.1	88.3	mg/Kg	07/14/17 10:05	07/17/17 14:59	SW6010
7440-47-3	Chromium	9.22		1	0.11	0.11	0.442	mg/Kg	07/14/17 10:05	07/17/17 14:59	SW6010
7440-48-4	Cobalt	4.04		1	0.331	0.331	1.32	mg/Kg	07/14/17 10:05	07/17/17 14:59	SW6010
7440-50-8	Copper	12.1		1	0.221	0.221	0.883	mg/Kg	07/14/17 10:05	07/17/17 14:59	SW6010
7439-89-6	Iron	10200		1	1.1	1.1	4.42	mg/Kg	07/14/17 10:05	07/17/17 14:59	SW6010
7439-92-1	Lead	40.8		1	0.106	0.221	0.53	mg/Kg	07/14/17 10:05	07/17/17 14:59	SW6010
7439-95-4	Magnesium	955		1	4.04	22.1	88.3	mg/Kg	07/14/17 10:05	07/17/17 14:59	SW6010
7439-96-5	Manganese	155		1	0.168	0.221	0.883	mg/Kg	07/14/17 10:05	07/17/17 14:59	SW6010
7439-97-6	Mercury	0.06		1	0.007	0.007	0.014	mg/Kg	07/17/17 12:53	07/18/17 10:15	SW7471A
7440-02-0	Nickel	14		1	0.406	0.442	1.77	mg/Kg	07/14/17 10:05	07/17/17 14:59	SW6010
7440-09-7	Potassium	259		1	3.09	22.1	88.3	mg/Kg	07/14/17 10:05	07/17/17 14:59	SW6010
7782-49-2	Selenium	3.84		1	0.221	0.221	0.883	mg/Kg	07/14/17 10:05	07/17/17 14:59	SW6010
7440-22-4	Silver	0.746		1	0.11	0.11	0.442	mg/Kg	07/14/17 10:05	07/17/17 14:59	SW6010
7440-23-5	Sodium	132		1	2.23	22.1	88.3	mg/Kg	07/14/17 10:05	07/17/17 14:59	SW6010
7440-28-0	Thallium	0.271	J	1	0.238	0.442	1.77	mg/Kg	07/14/17 10:05	07/17/17 14:59	SW6010
7440-62-2	Vanadium	11.4		1	0.442	0.442	1.77	mg/Kg	07/14/17 10:05	07/17/17 14:59	SW6010
7440-66-6	Zinc	33.4		1	0.442	0.442	1.77	mg/Kg	07/14/17 10:05	07/17/17 14:59	SW6010

Color Before:	Brown	Clarity Before:		Texture:	Medium
Color After:	Yellow	Clarity After:		Artifacts:	No
Comments:	METALS-TAL				

U = Not Detected
LOQ = Limit of Quantitation
MDL = Method Detection Limit
LOD = Limit of Detection
D = Dilution
Q = indicates LCS control criteria did not meet requirements

J = Estimated Value
B = Analyte Found in Associated Method Blank
* = indicates the duplicate analysis is not within control limits.
E = Indicates the reported value is estimated because of the presence of interference.
OR = Over Range
N =Spiked sample recovery not within control limits

CHEMTECH 284 Sheffield Street, Mountainside, NJ 07092 Phone: 908 789 8900 Fax: 908 789 8922

Report of Analysis

Client:	LiRo Engineers, Inc.		Date Collected:	07/12/17	
Project:	DDC OEGS - Cross Island Phase 2		Date Received:	07/13/17	
Client Sample ID:	CI-SB6-0-2		SDG No.:	I4187	
Lab Sample ID:	I4187-06		Matrix:	SOIL	
Analytical Method:	SW8082A		% Moisture:	6.8	Decanted:
Sample Wt/Vol:	30.1	Units: g	Final Vol:	10000	uL
Soil Aliquot Vol:		uL	Test:	PCB	
Extraction Type:			Injection Volume :		
GPC Factor :	1.0	PH :			

File ID/Qc Batch:	Dilution:	Prep Date	Date Analyzed	Prep Batch ID
PQ019427.D	1	07/14/17 10:55	07/18/17 16:48	PB100661

CAS Number	Parameter	Conc.	Qualifier	MDL	LOD	LOQ / CRQL	Units(Dry Weight)
TARGETS							
12674-11-2	Aroclor-1016	3.6	U	3.6	3.6	18.2	ug/kg
11104-28-2	Aroclor-1221	3.6	U	3.6	3.6	18.2	ug/kg
11141-16-5	Aroclor-1232	3.6	U	3.6	3.6	18.2	ug/kg
53469-21-9	Aroclor-1242	3.6	U	3.6	3.6	18.2	ug/kg
12672-29-6	Aroclor-1248	3.6	U	3.6	3.6	18.2	ug/kg
11097-69-1	Aroclor-1254	3.6	U	1.6	3.6	18.2	ug/kg
37324-23-5	Aroclor-1262	3.6	U	3.6	3.6	18.2	ug/kg
11100-14-4	Aroclor-1268	3.6	U	3.6	3.6	18.2	ug/kg
11096-82-5	Aroclor-1260	3.6	U	3.6	3.6	18.2	ug/kg
SURROGATES							
877-09-8	Tetrachloro-m-xylene	18.1		10 - 166		90%	SPK: 20
2051-24-3	Decachlorobiphenyl	12.1		60 - 125		61%	SPK: 20

Comments:

U = Not Detected
LOQ = Limit of Quantitation
MDL = Method Detection Limit
LOD = Limit of Detection
E = Value Exceeds Calibration Range
P = Indicates >25% difference for detected concentrations between the two GC columns
Q = indicates LCS control criteria did not meet requirements
M = MS/MSD acceptance criteria did not meet requirements

J = Estimated Value
B = Analyte Found in Associated Method Blank
N = Presumptive Evidence of a Compound
* = Values outside of QC limits
D = Dilution
S = Indicates estimated value where valid five-point calibration was not performed prior to analyte detection in sample.
() = Laboratory InHouse Limit

CHEMTECH 284 Sheffield Street, Mountainside, NJ 07092 Phone: 908 789 8900 Fax: 908 789 8922

Report of Analysis

Client:	LiRo Engineers, Inc.	Date Collected:	07/12/17
Project:	DDC OEGS - Cross Island Phase 2	Date Received:	07/13/17
Client Sample ID:	CI-SB6-0-2	SDG No.:	I4187
Lab Sample ID:	I4187-06	Matrix:	SOIL
Analytical Method:	SW8081	% Moisture:	6.8 Decanted:
Sample Wt/Vol:	30.1 Units: g	Final Vol:	10000 uL
Soil Aliquot Vol:	uL	Test:	PESTICIDE Group1
Extraction Type:		Injection Volume :	
GPC Factor :	1.0 PH :		

File ID/Qc Batch:	Dilution:	Prep Date	Date Analyzed	Prep Batch ID
PL027277.D	1	07/14/17 08:10	07/14/17 18:49	PB100634

CAS Number	Parameter	Conc.	Qualifier	MDL	LOD	LOQ / CRQL	Units(Dry Weight)
TARGETS							
319-84-6	alpha-BHC	0.353	U	0.139	0.353	1.8	ug/kg
319-85-7	beta-BHC	0.353	U	0.192	0.353	1.8	ug/kg
319-86-8	delta-BHC	0.353	U	0.107	0.353	1.8	ug/kg
58-89-9	gamma-BHC (Lindane)	0.353	U	0.16	0.353	1.8	ug/kg
76-44-8	Heptachlor	0.353	U	0.15	0.353	1.8	ug/kg
309-00-2	Aldrin	0.353	U	0.107	0.353	1.8	ug/kg
1024-57-3	Heptachlor epoxide	0.353	U	0.171	0.353	1.8	ug/kg
959-98-8	Endosulfan I	0.353	U	0.16	0.353	1.8	ug/kg
60-57-1	Dieldrin	0.353	U	0.139	0.353	1.8	ug/kg
72-55-9	4,4-DDE	0.663	J	0.214	0.353	1.8	ug/kg
72-20-8	Endrin	0.353	U	0.192	0.353	1.8	ug/kg
33213-65-9	Endosulfan II	0.353	U	0.15	0.353	1.8	ug/kg
72-54-8	4,4-DDD	0.353	U	0.182	0.353	1.8	ug/kg
1031-07-8	Endosulfan Sulfate	0.353	U	0.16	0.353	1.8	ug/kg
50-29-3	4,4-DDT	0.923	JP	0.15	0.353	1.8	ug/kg
72-43-5	Methoxychlor	0.353	U	0.182	0.353	1.8	ug/kg
53494-70-5	Endrin ketone	0.353	U	0.139	0.353	1.8	ug/kg
7421-93-4	Endrin aldehyde	0.353	U	0.16	0.353	1.8	ug/kg
5103-71-9	alpha-Chlordane	1.3	JP	0.15	0.353	1.8	ug/kg
5103-74-2	gamma-Chlordane	0.353	U	0.139	0.353	1.8	ug/kg
8001-35-2	Toxaphene	3.6	U	3.6	3.6	18.2	ug/kg
SURROGATES							
2051-24-3	Decachlorobiphenyl	13		10 - 169		65%	SPK: 20
877-09-8	Tetrachloro-m-xylene	11.4		31 - 151		57%	SPK: 20

CHEMTECH 284 Sheffield Street, Mountainside, NJ 07092 Phone: 908 789 8900 Fax: 908 789 8922

Report of Analysis

Client:	LiRo Engineers, Inc.	Date Collected:	07/12/17
Project:	DDC OEGS - Cross Island Phase 2	Date Received:	07/13/17
Client Sample ID:	CI-SB6-0-2	SDG No.:	I4187
Lab Sample ID:	I4187-06	Matrix:	SOIL
Analytical Method:	SW8081	% Moisture:	6.8 Decanted:
Sample Wt/Vol:	30.1 Units: g	Final Vol:	10000 uL
Soil Aliquot Vol:	uL	Test:	PESTICIDE Group1
Extraction Type:		Injection Volume :	
GPC Factor :	1.0 PH :		

File ID/Qc Batch:	Dilution:	Prep Date	Date Analyzed	Prep Batch ID
PL027277.D	1	07/14/17 08:10	07/14/17 18:49	PB100634

CAS Number	Parameter	Conc.	Qualifier	MDL	LOD	LOQ / CRQL	Units

Comments:

U = Not Detected
LOQ = Limit of Quantitation
MDL = Method Detection Limit
LOD = Limit of Detection
= Value Exceeds Calibration Range
P = Indicates >25% difference for detected concentrations between the two GC columns
Q = indicates LCS control criteria did not meet requirements
M = MS/MSD acceptance criteria did not meet requirements

J = Estimated Value
B = Analyte Found in Associated Method Blank
N = Presumptive Evidence of a Compound
* = Values outside of QC limits
D = Dilution
S = Indicates estimated value where valid five-point calibration was not performed prior to analyte detection in sample.
() = Laboratory InHouse Limit

CHEMTECH 284 Sheffield Street, Mountainside, NJ 07092 Phone: 908 789 8900 Fax: 908 789 8922

Report of Analysis

Client:	LiRo Engineers, Inc.	Date Collected:	07/12/17
Project:	DDC OEGS - Cross Island Phase 2	Date Received:	07/13/17
Client Sample ID:	CI-SB6-0-2	SDG No.:	I4187
Lab Sample ID:	I4187-06	Matrix:	SOIL
Analytical Method:	SW8270	% Moisture:	6.8
Sample Wt/Vol:	30.04 Units: g	Final Vol:	1000 uL
Soil Aliquot Vol:	uL	Test:	SVOCMS Group1
Extraction Type :	Decanted : N	Level :	LOW
Injection Volume :	GPC Factor : 1.0	GPC Cleanup :	N PH :

File ID/Qc Batch:	Dilution:	Prep Date	Date Analyzed	Prep Batch ID
BF096796.D	1	07/14/17 09:53	07/15/17 02:43	PB100644

CAS Number	Parameter	Conc.	Qualifier	MDL	LOD	LOQ / CRQL	Units(Dry Weight)
TARGETS							
100-52-7	Benzaldehyde	35.7	U	18.6	35.7	350	ug/Kg
108-95-2	Phenol	35.7	U	8.3	35.7	350	ug/Kg
111-44-4	bis(2-Chloroethyl)ether	35.7	U	17.1	35.7	350	ug/Kg
95-57-8	2-Chlorophenol	35.7	U	18.9	35.7	350	ug/Kg
95-48-7	2-Methylphenol	35.7	U	19.4	35.7	350	ug/Kg
108-60-1	2,2-oxybis(1-Chloropropane)	35.7	U	14.8	35.7	350	ug/Kg
98-86-2	Acetophenone	35.7	U	10.9	35.7	350	ug/Kg
65794-96-9	3+4-Methylphenols	35.7	U	18.5	35.7	350	ug/Kg
621-64-7	n-Nitroso-di-n-propylamine	35.7	U	18	35.7	350	ug/Kg
67-72-1	Hexachloroethane	35.7	U	16	35.7	350	ug/Kg
98-95-3	Nitrobenzene	35.7	U	13.5	35.7	350	ug/Kg
78-59-1	Isophorone	35.7	U	11.8	35.7	350	ug/Kg
88-75-5	2-Nitrophenol	35.7	U	17.3	35.7	350	ug/Kg
105-67-9	2,4-Dimethylphenol	35.7	U	20.3	35.7	350	ug/Kg
111-91-1	bis(2-Chloroethoxy)methane	35.7	U	20.6	35.7	350	ug/Kg
120-83-2	2,4-Dichlorophenol	35.7	U	13.6	35.7	350	ug/Kg
91-20-3	Naphthalene	35.7	U	12.3	35.7	350	ug/Kg
106-47-8	4-Chloroaniline	35.7	U	25.2	35.7	350	ug/Kg
87-68-3	Hexachlorobutadiene	35.7	U	13	35.7	350	ug/Kg
105-60-2	Caprolactam	71.4	U	16.6	71.4	350	ug/Kg
59-50-7	4-Chloro-3-methylphenol	35.7	U	15.9	35.7	350	ug/Kg
91-57-6	2-Methylnaphthalene	35.7	U	9	35.7	350	ug/Kg
77-47-4	Hexachlorocyclopentadiene	35.7	U	8.7	35.7	350	ug/Kg
88-06-2	2,4,6-Trichlorophenol	35.7	U	10.9	35.7	350	ug/Kg
95-95-4	2,4,5-Trichlorophenol	35.7	U	25.1	35.7	350	ug/Kg
92-52-4	1,1-Biphenyl	35.7	U	13.5	35.7	350	ug/Kg
91-58-7	2-Chloronaphthalene	35.7	U	8.1	35.7	350	ug/Kg
88-74-4	2-Nitroaniline	35.7	U	15.9	35.7	350	ug/Kg
131-11-3	Dimethylphthalate	420		9.6	35.7	350	ug/Kg
208-96-8	Acenaphthylene	35.7	U	9	35.7	350	ug/Kg
606-20-2	2,6-Dinitrotoluene	35.7	U	14.6	35.7	350	ug/Kg

CHEMTECH 284 Sheffield Street, Mountainside, NJ 07092 Phone: 908 789 8900 Fax: 908 789 8922

Report of Analysis

Client:	LiRo Engineers, Inc.	Date Collected:	07/12/17
Project:	DDC OEGS - Cross Island Phase 2	Date Received:	07/13/17
Client Sample ID:	CI-SB6-0-2	SDG No.:	I4187
Lab Sample ID:	I4187-06	Matrix:	SOIL
Analytical Method:	SW8270	% Moisture:	6.8
Sample Wt/Vol:	30.04 Units: g	Final Vol:	1000 uL
Soil Aliquot Vol:	uL	Test:	SVOCMS Group1
Extraction Type :	Decanted : N	Level :	LOW
Injection Volume :	GPC Factor : 1.0	GPC Cleanup :	N PH :

File ID/Qc Batch:	Dilution:	Prep Date	Date Analyzed	Prep Batch ID
BF096796.D	1	07/14/17 09:53	07/15/17 02:43	PB100644

CAS Number	Parameter	Conc.	Qualifier	MDL	LOD	LOQ / CRQL	Units(Dry Weight)
99-09-2	3-Nitroaniline	71.4	U	22.9	71.4	350	ug/Kg
83-32-9	Acenaphthene	35.7	U	10.1	35.7	350	ug/Kg
51-28-5	2,4-Dinitrophenol	290	U	36.3	290	350	ug/Kg
100-02-7	4-Nitrophenol	180	U	66.3	180	350	ug/Kg
132-64-9	Dibenzofuran	35.7	U	13.9	35.7	350	ug/Kg
121-14-2	2,4-Dinitrotoluene	35.7	U	10.7	35.7	350	ug/Kg
84-66-2	Diethylphthalate	35.7	U	5.6	35.7	350	ug/Kg
7005-72-3	4-Chlorophenyl-phenylether	35.7	U	19.4	35.7	350	ug/Kg
86-73-7	Fluorene	35.7	U	13.5	35.7	350	ug/Kg
100-01-6	4-Nitroaniline	71.4	UQ	46.5	71.4	350	ug/Kg
534-52-1	4,6-Dinitro-2-methylphenol	180	U	20.5	180	350	ug/Kg
86-30-6	n-Nitrosodiphenylamine	35.7	U	8.6	35.7	350	ug/Kg
101-55-3	4-Bromophenyl-phenylether	35.7	U	7	35.7	350	ug/Kg
118-74-1	Hexachlorobenzene	35.7	U	14.6	35.7	350	ug/Kg
1912-24-9	Atrazine	35.7	U	18.9	35.7	350	ug/Kg
87-86-5	Pentachlorophenol	35.7	U	24.4	35.7	350	ug/Kg
85-01-8	Phenanthrene	35.7	U	9.6	35.7	350	ug/Kg
120-12-7	Anthracene	35.7	U	7.3	35.7	350	ug/Kg
86-74-8	Carbazole	35.7	U	7.8	35.7	350	ug/Kg
84-74-2	Di-n-butylphthalate	35.7	U	28.1	35.7	350	ug/Kg
206-44-0	Fluoranthene	35.7	U	7.2	35.7	350	ug/Kg
129-00-0	Pyrene	35.7	U	8.6	35.7	350	ug/Kg
85-68-7	Butylbenzylphthalate	35.7	UQ	17.1	35.7	350	ug/Kg
91-94-1	3,3-Dichlorobenzidine	35.7	U	22.9	35.7	350	ug/Kg
56-55-3	Benzo(a)anthracene	35.7	U	17	35.7	350	ug/Kg
218-01-9	Chrysene	35.7	U	16.2	35.7	350	ug/Kg
117-81-7	Bis(2-ethylhexyl)phthalate	89.6	J	12.6	35.7	350	ug/Kg
117-84-0	Di-n-octyl phthalate	35.7	U	4.1	35.7	350	ug/Kg
205-99-2	Benzo(b)fluoranthene	35.7	U	11.7	35.7	350	ug/Kg
207-08-9	Benzo(k)fluoranthene	35.7	U	16.8	35.7	350	ug/Kg
50-32-8	Benzo(a)pyrene	35.7	U	7.7	35.7	350	ug/Kg
193-39-5	Indeno(1,2,3-cd)pyrene	35.7	U	11.9	35.7	350	ug/Kg
53-70-3	Dibenzo(a,h)anthracene	35.7	U	10.3	35.7	350	ug/Kg

CHEMTECH 284 Sheffield Street, Mountainside, NJ 07092 Phone: 908 789 8900 Fax: 908 789 8922

Report of Analysis

Client:	LiRo Engineers, Inc.	Date Collected:	07/12/17
Project:	DDC OEGS - Cross Island Phase 2	Date Received:	07/13/17
Client Sample ID:	CI-SB6-0-2	SDG No.:	I4187
Lab Sample ID:	I4187-06	Matrix:	SOIL
Analytical Method:	SW8270	% Moisture:	6.8
Sample Wt/Vol:	30.04 Units: g	Final Vol:	1000 uL
Soil Aliquot Vol:	uL	Test:	SVOCMS Group1
Extraction Type :	Decanted : N	Level :	LOW
Injection Volume :	GPC Factor : 1.0	GPC Cleanup :	N PH :

File ID/Qc Batch:	Dilution:	Prep Date	Date Analyzed	Prep Batch ID
BF096796.D	1	07/14/17 09:53	07/15/17 02:43	PB100644

CAS Number	Parameter	Conc.	Qualifier	MDL	LOD	LOQ / CRQL	Units(Dry Weight)
191-24-2	Benzo(g,h,i)perylene	35.7	U	14.5	35.7	350	ug/Kg
95-94-3	1,2,4,5-Tetrachlorobenzene	35.7	U	14	35.7	350	ug/Kg
123-91-1	1,4-Dioxane	71.4	U	14	71.4	350	ug/Kg
58-90-2	2,3,4,6-Tetrachlorophenol	35.7	U	14	35.7	350	ug/Kg
SURROGATES							
367-12-4	2-Fluorophenol	100		28 - 127		67%	SPK: 150
13127-88-3	Phenol-d6	91		34 - 127		61%	SPK: 150
4165-60-0	Nitrobenzene-d5	64.9		31 - 132		65%	SPK: 100
321-60-8	2-Fluorobiphenyl	70.2		39 - 123		70%	SPK: 100
118-79-6	2,4,6-Tribromophenol	81.8		30 - 133		55%	SPK: 150
1718-51-0	Terphenyl-d14	35.7	*	37 - 115		36%	SPK: 100
INTERNAL STANDARDS							
3855-82-1	1,4-Dichlorobenzene-d4	103760	6.62				
1146-65-2	Naphthalene-d8	419601	7.9				
15067-26-2	Acenaphthene-d10	179355	9.65				
1517-22-2	Phenanthrene-d10	236890	11.13				
1719-03-5	Chrysene-d12	218570	13.76				
1520-96-3	Perylene-d12	198996	15.14				

U = Not Detected
LOQ = Limit of Quantitation
MDL = Method Detection Limit
LOD = Limit of Detection
E = Value Exceeds Calibration Range
Q = indicates LCS control criteria did not meet requirements
M = MS/MSD acceptance criteria did not meet requirements

J = Estimated Value
B = Analyte Found in Associated Method Blank
N = Presumptive Evidence of a Compound
* = Values outside of QC limits
D = Dilution
() = Laboratory InHouse Limit

CHEMTECH 284 Sheffield Street, Mountainside, NJ 07092 Phone: 908 789 8900 Fax: 908 789 8922

Report of Analysis

Client:	LiRo Engineers, Inc.	Date Collected:	07/12/17
Project:	DDC OEGS - Cross Island Phase 2	Date Received:	07/13/17
Client Sample ID:	CI-SB6-0-2	SDG No.:	I4187
Lab Sample ID:	I4187-06	Matrix:	SOIL
Analytical Method:	SW8260	% Moisture:	6.8
Sample Wt/Vol:	5 Units: g	Final Vol:	5000 uL
Soil Aliquot Vol:	uL	Test:	VOCMS Group1
GC Column:	RTX-VMS ID : 0.18	Level :	LOW

File ID/Qc Batch:	Dilution:	Prep Date	Date Analyzed	Prep Batch ID
VF053632.D	1		07/14/17 20:36	VF071417

CAS Number	Parameter	Conc.	Qualifier	MDL	LOD	LOQ / CRQL	Units(Dry Weight)
TARGETS							
75-71-8	Dichlorodifluoromethane	0.54	U	0.54	0.54	5.4	ug/Kg
74-87-3	Chloromethane	0.54	U	0.54	0.54	5.4	ug/Kg
75-01-4	Vinyl Chloride	0.54	U	0.54	0.54	5.4	ug/Kg
74-83-9	Bromomethane	1.1	U	1.1	1.1	5.4	ug/Kg
75-00-3	Chloroethane	0.54	U	0.54	0.54	5.4	ug/Kg
75-69-4	Trichlorofluoromethane	0.54	UQ	0.54	0.54	5.4	ug/Kg
76-13-1	1,1,2-Trichlorotrifluoroethane	0.54	U	0.54	0.54	5.4	ug/Kg
75-65-0	Tert butyl alcohol	26.8	U	8	26.8	26.8	ug/Kg
75-35-4	1,1-Dichloroethene	0.54	UQ	0.54	0.54	5.4	ug/Kg
67-64-1	Acetone	2.7	U	2.7	2.7	26.8	ug/Kg
75-15-0	Carbon Disulfide	0.54	U	0.54	0.54	5.4	ug/Kg
1634-04-4	Methyl tert-butyl Ether	0.54	UQ	0.54	0.54	5.4	ug/Kg
79-20-9	Methyl Acetate	1.1	U	1.1	1.1	5.4	ug/Kg
75-09-2	Methylene Chloride	2.3	J	0.54	0.54	5.4	ug/Kg
156-60-5	trans-1,2-Dichloroethene	0.54	UQ	0.54	0.54	5.4	ug/Kg
75-34-3	1,1-Dichloroethane	0.54	UQ	0.54	0.54	5.4	ug/Kg
110-82-7	Cyclohexane	0.54	U	0.54	0.54	5.4	ug/Kg
78-93-3	2-Butanone	8	U	3.3	8	26.8	ug/Kg
56-23-5	Carbon Tetrachloride	0.54	U	0.54	0.54	5.4	ug/Kg
156-59-2	cis-1,2-Dichloroethene	0.54	U	0.54	0.54	5.4	ug/Kg
74-97-5	Bromochloromethane	0.54	U	0.54	0.54	5.4	ug/Kg
67-66-3	Chloroform	0.54	UQ	0.54	0.54	5.4	ug/Kg
71-55-6	1,1,1-Trichloroethane	0.54	U	0.54	0.54	5.4	ug/Kg
108-87-2	Methylcyclohexane	0.54	U	0.54	0.54	5.4	ug/Kg
71-43-2	Benzene	0.54	U	0.41	0.54	5.4	ug/Kg
107-06-2	1,2-Dichloroethane	0.54	UQ	0.54	0.54	5.4	ug/Kg
79-01-6	Trichloroethene	0.54	U	0.54	0.54	5.4	ug/Kg
78-87-5	1,2-Dichloropropane	0.54	U	0.28	0.54	5.4	ug/Kg
5-27-4	Bromodichloromethane	0.54	U	0.54	0.54	5.4	ug/Kg
108-10-1	4-Methyl-2-Pentanone	2.7	U	2.7	2.7	26.8	ug/Kg
108-88-3	Toluene	0.54	U	0.54	0.54	5.4	ug/Kg
10061-02-6	t-1,3-Dichloropropene	0.54	U	0.54	0.54	5.4	ug/Kg

CHEMTECH 284 Sheffield Street, Mountainside, NJ 07092 Phone: 908 789 8900 Fax: 908 789 8922

Report of Analysis

Client:	LiRo Engineers, Inc.	Date Collected:	07/12/17
Project:	DDC OEGS - Cross Island Phase 2	Date Received:	07/13/17
Client Sample ID:	CI-SB6-0-2	SDG No.:	I4187
Lab Sample ID:	I4187-06	Matrix:	SOIL
Analytical Method:	SW8260	% Moisture:	6.8
Sample Wt/Vol:	5 Units: g	Final Vol:	5000 uL
Soil Aliquot Vol:	uL	Test:	VOCMS Group1
GC Column:	RTX-VMS ID : 0.18	Level :	LOW

File ID/Qc Batch:	Dilution:	Prep Date	Date Analyzed	Prep Batch ID
VF053632.D	1		07/14/17 20:36	VF071417

CAS Number	Parameter	Conc.	Qualifier	MDL	LOD	LOQ / CRQL	Units(Dry Weight)
10061-01-5	cis-1,3-Dichloropropene	0.54	U	0.54	0.54	5.4	ug/Kg
79-00-5	1,1,2-Trichloroethane	1.1	U	0.97	1.1	5.4	ug/Kg
591-78-6	2-Hexanone	2.7	U	2.7	2.7	26.8	ug/Kg
124-48-1	Dibromochloromethane	0.54	U	0.54	0.54	5.4	ug/Kg
106-93-4	1,2-Dibromoethane	0.54	U	0.54	0.54	5.4	ug/Kg
127-18-4	Tetrachloroethene	0.54	U	0.54	0.54	5.4	ug/Kg
108-90-7	Chlorobenzene	0.54	U	0.54	0.54	5.4	ug/Kg
100-41-4	Ethyl Benzene	0.54	U	0.54	0.54	5.4	ug/Kg
179601-23-1	m/p-Xylenes	1.1	U	0.77	1.1	10.7	ug/Kg
95-47-6	o-Xylene	0.54	U	0.54	0.54	5.4	ug/Kg
100-42-5	Styrene	0.54	U	0.48	0.54	5.4	ug/Kg
75-25-2	Bromoform	1.6	U	0.79	1.6	5.4	ug/Kg
98-82-8	Isopropylbenzene	0.54	U	0.52	0.54	5.4	ug/Kg
79-34-5	1,1,2,2-Tetrachloroethane	0.54	U	0.49	0.54	5.4	ug/Kg
541-73-1	1,3-Dichlorobenzene	0.54	U	0.4	0.54	5.4	ug/Kg
106-46-7	1,4-Dichlorobenzene	0.54	U	0.44	0.54	5.4	ug/Kg
95-50-1	1,2-Dichlorobenzene	0.54	U	0.54	0.54	5.4	ug/Kg
96-12-8	1,2-Dibromo-3-Chloropropane	5.4	U	0.93	5.4	5.4	ug/Kg
120-82-1	1,2,4-Trichlorobenzene	0.54	U	0.54	0.54	5.4	ug/Kg
87-61-6	1,2,3-Trichlorobenzene	1.1	U	0.54	1.1	5.4	ug/Kg
SURROGATES							
17060-07-0	1,2-Dichloroethane-d4	34.8		56 - 120		70%	SPK: 50
1868-53-7	Dibromofluoromethane	45.1		57 - 135		90%	SPK: 50
2037-26-5	Toluene-d8	41.3		67 - 123		83%	SPK: 50
460-00-4	4-Bromofluorobenzene	36.9		33 - 141		74%	SPK: 50
INTERNAL STANDARDS							
363-72-4	Pentafluorobenzene	512978	4.82				
540-36-3	1,4-Difluorobenzene	938813	5.55				
3114-55-4	Chlorobenzene-d5	794435	9.71				
3855-82-1	1,4-Dichlorobenzene-d4	350587	12.5				

CHEMTECH 284 Sheffield Street, Mountainside, NJ 07092 Phone: 908 789 8900 Fax: 908 789 8922

Report of Analysis

Client:	LiRo Engineers, Inc.	Date Collected:	07/12/17
Project:	DDC OEGS - Cross Island Phase 2	Date Received:	07/13/17
Client Sample ID:	CI-SB6-0-2	SDG No.:	I4187
Lab Sample ID:	I4187-06	Matrix:	SOIL
Analytical Method:	SW8260	% Moisture:	6.8
Sample Wt/Vol:	5 Units: g	Final Vol:	5000 uL
Soil Aliquot Vol:	uL	Test:	VOCMS Group1
GC Column:	RTX-VMS ID : 0.18	Level :	LOW

File ID/Qc Batch:	Dilution:	Prep Date	Date Analyzed	Prep Batch ID
VF053632.D	1		07/14/17 20:36	VF071417

CAS Number	Parameter	Conc.	Qualifier	MDL	LOD	LOQ / CRQL	Units

U = Not Detected
LOQ = Limit of Quantitation
MDL = Method Detection Limit
LOD = Limit of Detection
E = Value Exceeds Calibration Range
Q = indicates LCS control criteria did not meet requirements
M = MS/MSD acceptance criteria did not meet requirements

J = Estimated Value
B = Analyte Found in Associated Method Blank
N = Presumptive Evidence of a Compound
* = Values outside of QC limits
D = Dilution
() = Laboratory InHouse Limit

CHEMTECH 284 Sheffield Street, Mountainside, NJ 07092 Phone: 908 789 8900 Fax: 908 789 8922

Report of Analysis

Client:	LiRo Engineers, Inc.	Date Collected:	07/12/17
Project:	DDC OEGS - Cross Island Phase 2	Date Received:	07/13/17
Client Sample ID:	CI-SB7-0-2	SDG No.:	I4187
Lab Sample ID:	I4187-07	Matrix:	SOIL
Level (low/med):	low	% Solid:	88.1

Cas	Parameter	Conc.	Qua.	DF	MDL	LOD	LOQ / CRQL	Units(Dry Weight)	Prep Date	Date Ana.	Ana Met.
7429-90-5	Aluminum	5470		1	0.818	1.22	4.87	mg/Kg	07/14/17 10:05	07/17/17 15:03	SW6010
7440-36-0	Antimony	0.609	UN	1	0.546	0.609	2.44	mg/Kg	07/14/17 10:05	07/17/17 15:03	SW6010
7440-38-2	Arsenic	4.54		1	0.244	0.244	0.974	mg/Kg	07/14/17 10:05	07/17/17 15:03	SW6010
7440-39-3	Barium	38.1		1	0.39	1.22	4.87	mg/Kg	07/14/17 10:05	07/17/17 15:03	SW6010
7440-41-7	Beryllium	0.26	J	1	0.058	0.073	0.292	mg/Kg	07/14/17 10:05	07/17/17 15:03	SW6010
7440-43-9	Cadmium	0.755		1	0.058	0.073	0.292	mg/Kg	07/14/17 10:05	07/17/17 15:03	SW6010
7440-70-2	Calcium	10200		1	1.04	24.4	97.4	mg/Kg	07/14/17 10:05	07/17/17 15:03	SW6010
7440-47-3	Chromium	14.8		1	0.122	0.122	0.487	mg/Kg	07/14/17 10:05	07/17/17 15:03	SW6010
7440-48-4	Cobalt	3.95		1	0.365	0.365	1.46	mg/Kg	07/14/17 10:05	07/17/17 15:03	SW6010
7440-50-8	Copper	32.1		1	0.244	0.244	0.974	mg/Kg	07/14/17 10:05	07/17/17 15:03	SW6010
7439-89-6	Iron	13300		1	1.22	1.22	4.87	mg/Kg	07/14/17 10:05	07/17/17 15:03	SW6010
7439-92-1	Lead	209		1	0.117	0.244	0.585	mg/Kg	07/14/17 10:05	07/17/17 15:03	SW6010
7439-95-4	Magnesium	6060		1	4.46	24.4	97.4	mg/Kg	07/14/17 10:05	07/17/17 15:03	SW6010
7439-96-5	Manganese	196		1	0.185	0.244	0.974	mg/Kg	07/14/17 10:05	07/17/17 15:03	SW6010
7439-97-6	Mercury	0.218		1	0.007	0.007	0.014	mg/Kg	07/17/17 12:53	07/18/17 10:17	SW7471A
7440-02-0	Nickel	16.5		1	0.448	0.487	1.95	mg/Kg	07/14/17 10:05	07/17/17 15:03	SW6010
7440-09-7	Potassium	247		1	3.41	24.4	97.4	mg/Kg	07/14/17 10:05	07/17/17 15:03	SW6010
7782-49-2	Selenium	4.13		1	0.244	0.244	0.974	mg/Kg	07/14/17 10:05	07/17/17 15:03	SW6010
7440-22-4	Silver	1.03		1	0.122	0.122	0.487	mg/Kg	07/14/17 10:05	07/17/17 15:03	SW6010
7440-23-5	Sodium	119		1	2.46	24.4	97.4	mg/Kg	07/14/17 10:05	07/17/17 15:03	SW6010
7440-28-0	Thallium	0.487	U	1	0.263	0.487	1.95	mg/Kg	07/14/17 10:05	07/17/17 15:03	SW6010
7440-62-2	Vanadium	22		1	0.487	0.487	1.95	mg/Kg	07/14/17 10:05	07/17/17 15:03	SW6010
7440-66-6	Zinc	176		1	0.487	0.487	1.95	mg/Kg	07/14/17 10:05	07/17/17 15:03	SW6010

Color Before:	Brown	Clarity Before:		Texture:	Medium
Color After:	Yellow	Clarity After:		Artifacts:	No
Comments:	METALS-TAL				

U = Not Detected
LOQ = Limit of Quantitation
MDL = Method Detection Limit
LOD = Limit of Detection
D = Dilution
Q = indicates LCS control criteria did not meet requirements

J = Estimated Value
B = Analyte Found in Associated Method Blank
* = indicates the duplicate analysis is not within control limits.
E = Indicates the reported value is estimated because of the presence of interference.
OR = Over Range
N =Spiked sample recovery not within control limits

CHEMTECH 284 Sheffield Street, Mountainside, NJ 07092 Phone: 908 789 8900 Fax: 908 789 8922

Report of Analysis

Client:	LiRo Engineers, Inc.	Date Collected:	07/12/17
Project:	DDC OEGS - Cross Island Phase 2	Date Received:	07/13/17
Client Sample ID:	CI-SB7-0-2	SDG No.:	I4187
Lab Sample ID:	I4187-07	Matrix:	SOIL
Analytical Method:	SW8082A	% Moisture:	11.9 Decanted:
Sample Wt/Vol:	30.07 Units: g	Final Vol:	10000 uL
Soil Aliquot Vol:	uL	Test:	PCB
Extraction Type:		Injection Volume :	
GPC Factor :	1.0 PH :		

File ID/Qc Batch:	Dilution:	Prep Date	Date Analyzed	Prep Batch ID
PQ019438.D	1	07/14/17 10:55	07/19/17 10:26	PB100661

CAS Number	Parameter	Conc.	Qualifier	MDL	LOD	LOQ / CRQL	Units(Dry Weight)
TARGETS							
12674-11-2	Aroclor-1016	3.8	U	3.8	3.8	19.3	ug/kg
11104-28-2	Aroclor-1221	3.8	U	3.8	3.8	19.3	ug/kg
11141-16-5	Aroclor-1232	3.8	U	3.8	3.8	19.3	ug/kg
53469-21-9	Aroclor-1242	3.8	U	3.8	3.8	19.3	ug/kg
12672-29-6	Aroclor-1248	3.8	U	3.8	3.8	19.3	ug/kg
11097-69-1	Aroclor-1254	3.8	U	1.7	3.8	19.3	ug/kg
37324-23-5	Aroclor-1262	3.8	U	3.8	3.8	19.3	ug/kg
11100-14-4	Aroclor-1268	3.8	U	3.8	3.8	19.3	ug/kg
11096-82-5	Aroclor-1260	28.4	P	3.8	3.8	19.3	ug/kg
SURROGATES							
877-09-8	Tetrachloro-m-xylene	20.4		10 - 166		100%	SPK: 20
2051-24-3	Decachlorobiphenyl	12.1	*	60 - 125		59%	SPK: 20

Comments:

U = Not Detected
LOQ = Limit of Quantitation
MDL = Method Detection Limit
LOD = Limit of Detection
E = Value Exceeds Calibration Range
P = Indicates >25% difference for detected concentrations between the two GC columns
Q = indicates LCS control criteria did not meet requirements
M = MS/MSD acceptance criteria did not meet requirements

J = Estimated Value
B = Analyte Found in Associated Method Blank
N = Presumptive Evidence of a Compound
* = Values outside of QC limits
D = Dilution
S = Indicates estimated value where valid five-point calibration was not performed prior to analyte detection in sample.
() = Laboratory InHouse Limit

CHEMTECH 284 Sheffield Street, Mountainside, NJ 07092 Phone: 908 789 8900 Fax: 908 789 8922

Report of Analysis

Client:	LiRo Engineers, Inc.	Date Collected:	07/12/17
Project:	DDC OEGS - Cross Island Phase 2	Date Received:	07/13/17
Client Sample ID:	CI-SB7-0-2	SDG No.:	I4187
Lab Sample ID:	I4187-07	Matrix:	SOIL
Analytical Method:	SW8081	% Moisture:	11.9 Decanted:
Sample Wt/Vol:	30.07 Units: g	Final Vol:	10000 uL
Soil Aliquot Vol:	uL	Test:	PESTICIDE Group1
Extraction Type:		Injection Volume :	
GPC Factor :	1.0 PH :		

File ID/Qc Batch:	Dilution:	Prep Date	Date Analyzed	Prep Batch ID
PL027278.D	1	07/14/17 08:10	07/14/17 19:04	PB100634

CAS Number	Parameter	Conc.	Qualifier	MDL	LOD	LOQ / CRQL	Units(Dry Weight)
TARGETS							
319-84-6	alpha-BHC	0.374	U	0.147	0.374	1.9	ug/kg
319-85-7	beta-BHC	0.374	U	0.204	0.374	1.9	ug/kg
319-86-8	delta-BHC	0.374	U	0.113	0.374	1.9	ug/kg
58-89-9	gamma-BHC (Lindane)	0.374	U	0.17	0.374	1.9	ug/kg
76-44-8	Heptachlor	0.374	U	0.158	0.374	1.9	ug/kg
309-00-2	Aldrin	0.374	U	0.113	0.374	1.9	ug/kg
1024-57-3	Heptachlor epoxide	0.374	U	0.181	0.374	1.9	ug/kg
959-98-8	Endosulfan I	0.374	U	0.17	0.374	1.9	ug/kg
60-57-1	Dieldrin	0.374	U	0.147	0.374	1.9	ug/kg
72-55-9	4,4-DDE	1.8	J	0.226	0.374	1.9	ug/kg
72-20-8	Endrin	0.374	U	0.204	0.374	1.9	ug/kg
33213-65-9	Endosulfan II	0.374	U	0.158	0.374	1.9	ug/kg
72-54-8	4,4-DDD	0.374	U	0.192	0.374	1.9	ug/kg
1031-07-8	Endosulfan Sulfate	0.374	U	0.17	0.374	1.9	ug/kg
50-29-3	4,4-DDT	3.5	P	0.158	0.374	1.9	ug/kg
72-43-5	Methoxychlor	0.374	U	0.192	0.374	1.9	ug/kg
53494-70-5	Endrin ketone	0.374	U	0.147	0.374	1.9	ug/kg
7421-93-4	Endrin aldehyde	0.374	U	0.17	0.374	1.9	ug/kg
5103-71-9	alpha-Chlordane	0.374	U	0.158	0.374	1.9	ug/kg
5103-74-2	gamma-Chlordane	0.374	U	0.147	0.374	1.9	ug/kg
8001-35-2	Toxaphene	3.8	U	3.8	3.8	19.3	ug/kg
SURROGATES							
2051-24-3	Decachlorobiphenyl	13.3		10 - 169		67%	SPK: 20
877-09-8	Tetrachloro-m-xylene	11.6		31 - 151		58%	SPK: 20

CHEMTECH 284 Sheffield Street, Mountainside, NJ 07092 Phone: 908 789 8900 Fax: 908 789 8922

Report of Analysis

Client:	LiRo Engineers, Inc.	Date Collected:	07/12/17
Project:	DDC OEGS - Cross Island Phase 2	Date Received:	07/13/17
Client Sample ID:	CI-SB7-0-2	SDG No.:	I4187
Lab Sample ID:	I4187-07	Matrix:	SOIL
Analytical Method:	SW8081	% Moisture:	11.9 Decanted:
Sample Wt/Vol:	30.07 Units: g	Final Vol:	10000 uL
Soil Aliquot Vol:	uL	Test:	PESTICIDE Group1
Extraction Type:		Injection Volume :	
GPC Factor :	1.0 PH :		

File ID/Qc Batch:	Dilution:	Prep Date	Date Analyzed	Prep Batch ID
PL027278.D	1	07/14/17 08:10	07/14/17 19:04	PB100634

CAS Number	Parameter	Conc.	Qualifier	MDL	LOD	LOQ / CRQL	Units

Comments:

U = Not Detected
LOQ = Limit of Quantitation
MDL = Method Detection Limit
LOD = Limit of Detection
E = Value Exceeds Calibration Range
P = Indicates >25% difference for detected concentrations between the two GC columns
Q = indicates LCS control criteria did not meet requirements
M = MS/MSD acceptance criteria did not meet requirements

J = Estimated Value
B = Analyte Found in Associated Method Blank
N = Presumptive Evidence of a Compound
* = Values outside of QC limits
D = Dilution
S = Indicates estimated value where valid five-point calibration was not performed prior to analyte detection in sample.
() = Laboratory InHouse Limit

CHEMTECH 284 Sheffield Street, Mountainside, NJ 07092 Phone: 908 789 8900 Fax: 908 789 8922

Report of Analysis

Client:	LiRo Engineers, Inc.	Date Collected:	07/12/17
Project:	DDC OEGS - Cross Island Phase 2	Date Received:	07/13/17
Client Sample ID:	CI-SB7-0-2	SDG No.:	I4187
Lab Sample ID:	I4187-07	Matrix:	SOIL
Analytical Method:	SW8270	% Moisture:	11.9
Sample Wt/Vol:	30.13 Units: g	Final Vol:	1000 uL
Soil Aliquot Vol:	uL	Test:	SVOCMS Group1
Extraction Type :	Decanted : N	Level :	LOW
Injection Volume :	GPC Factor : 1.0	GPC Cleanup :	N PH :

File ID/Qc Batch:	Dilution:	Prep Date	Date Analyzed	Prep Batch ID
BF096797.D	1	07/14/17 09:53	07/15/17 03:10	PB100644

CAS Number	Parameter	Conc.	Qualifier	MDL	LOD	LOQ / CRQL	Units(Dry Weight)
TARGETS							
100-52-7	Benzaldehyde	37.7	U	19.7	37.7	370	ug/Kg
108-95-2	Phenol	37.7	U	8.7	37.7	370	ug/Kg
111-44-4	bis(2-Chloroethyl)ether	37.7	U	18.1	37.7	370	ug/Kg
95-57-8	2-Chlorophenol	37.7	U	19.9	37.7	370	ug/Kg
95-48-7	2-Methylphenol	37.7	U	20.5	37.7	370	ug/Kg
108-60-1	2,2-oxybis(1-Chloropropane)	37.7	U	15.6	37.7	370	ug/Kg
98-86-2	Acetophenone	37.7	U	11.5	37.7	370	ug/Kg
65794-96-9	3+4-Methylphenols	37.7	U	19.6	37.7	370	ug/Kg
621-64-7	n-Nitroso-di-n-propylamine	37.7	U	19	37.7	370	ug/Kg
67-72-1	Hexachloroethane	37.7	U	16.8	37.7	370	ug/Kg
98-95-3	Nitrobenzene	37.7	U	14.2	37.7	370	ug/Kg
78-59-1	Isophorone	37.7	U	12.4	37.7	370	ug/Kg
88-75-5	2-Nitrophenol	37.7	U	18.2	37.7	370	ug/Kg
105-67-9	2,4-Dimethylphenol	37.7	U	21.4	37.7	370	ug/Kg
111-91-1	bis(2-Chloroethoxy)methane	37.7	U	21.7	37.7	370	ug/Kg
120-83-2	2,4-Dichlorophenol	37.7	U	14.4	37.7	370	ug/Kg
91-20-3	Naphthalene	37.7	U	13	37.7	370	ug/Kg
106-47-8	4-Chloroaniline	37.7	U	26.6	37.7	370	ug/Kg
87-68-3	Hexachlorobutadiene	37.7	U	13.7	37.7	370	ug/Kg
105-60-2	Caprolactam	75.3	U	17.5	75.3	370	ug/Kg
59-50-7	4-Chloro-3-methylphenol	37.7	U	16.7	37.7	370	ug/Kg
91-57-6	2-Methylnaphthalene	37.7	U	9.5	37.7	370	ug/Kg
77-47-4	Hexachlorocyclopentadiene	37.7	U	9.2	37.7	370	ug/Kg
88-06-2	2,4,6-Trichlorophenol	37.7	U	11.5	37.7	370	ug/Kg
95-95-4	2,4,5-Trichlorophenol	37.7	U	26.4	37.7	370	ug/Kg
92-52-4	1,1-Biphenyl	37.7	U	14.2	37.7	370	ug/Kg
91-58-7	2-Chloronaphthalene	37.7	U	8.6	37.7	370	ug/Kg
88-74-4	2-Nitroaniline	37.7	U	16.7	37.7	370	ug/Kg
131-11-3	Dimethylphthalate	370		10.2	37.7	370	ug/Kg
208-96-8	Acenaphthylene	37.7	U	9.5	37.7	370	ug/Kg
606-20-2	2,6-Dinitrotoluene	37.7	U	15.4	37.7	370	ug/Kg

CHEMTECH 284 Sheffield Street, Mountainside, NJ 07092 Phone: 908 789 8900 Fax: 908 789 8922

Report of Analysis

Client:	LiRo Engineers, Inc.	Date Collected:	07/12/17
Project:	DDC OEGS - Cross Island Phase 2	Date Received:	07/13/17
Client Sample ID:	CI-SB7-0-2	SDG No.:	I4187
Lab Sample ID:	I4187-07	Matrix:	SOIL
Analytical Method:	SW8270	% Moisture:	11.9
Sample Wt/Vol:	30.13 Units: g	Final Vol:	1000 uL
Soil Aliquot Vol:	uL	Test:	SVOCMS Group1
Extraction Type :	Decanted : N	Level :	LOW
Injection Volume :	GPC Factor : 1.0	GPC Cleanup :	N PH :

File ID/Qc Batch:	Dilution:	Prep Date	Date Analyzed	Prep Batch ID
BF096797.D	1	07/14/17 09:53	07/15/17 03:10	PB100644

CAS Number	Parameter	Conc.	Qualifier	MDL	LOD	LOQ / CRQL	Units(Dry Weight)
99-09-2	3-Nitroaniline	75.3	U	24.2	75.3	370	ug/Kg
83-32-9	Acenaphthene	37.7	U	10.6	37.7	370	ug/Kg
51-28-5	2,4-Dinitrophenol	300	U	38.3	300	370	ug/Kg
100-02-7	4-Nitrophenol	190	U	70	190	370	ug/Kg
132-64-9	Dibenzofuran	37.7	U	14.7	37.7	370	ug/Kg
121-14-2	2,4-Dinitrotoluene	37.7	U	11.3	37.7	370	ug/Kg
84-66-2	Diethylphthalate	37.7	U	5.9	37.7	370	ug/Kg
7005-72-3	4-Chlorophenyl-phenylether	37.7	U	20.5	37.7	370	ug/Kg
86-73-7	Fluorene	37.7	U	14.2	37.7	370	ug/Kg
100-01-6	4-Nitroaniline	75.3	UQ	49	75.3	370	ug/Kg
534-52-1	4,6-Dinitro-2-methylphenol	190	U	21.6	190	370	ug/Kg
86-30-6	n-Nitrosodiphenylamine	37.7	U	9	37.7	370	ug/Kg
101-55-3	4-Bromophenyl-phenylether	37.7	U	7.3	37.7	370	ug/Kg
118-74-1	Hexachlorobenzene	37.7	U	15.4	37.7	370	ug/Kg
1912-24-9	Atrazine	37.7	U	19.9	37.7	370	ug/Kg
87-86-5	Pentachlorophenol	37.7	U	25.8	37.7	370	ug/Kg
85-01-8	Phenanthrene	37.7	U	10.2	37.7	370	ug/Kg
120-12-7	Anthracene	37.7	U	7.7	37.7	370	ug/Kg
86-74-8	Carbazole	37.7	U	8.3	37.7	370	ug/Kg
84-74-2	Di-n-butylphthalate	37.7	U	29.6	37.7	370	ug/Kg
206-44-0	Fluoranthene	120	J	7.6	37.7	370	ug/Kg
129-00-0	Pyrene	79	J	9	37.7	370	ug/Kg
85-68-7	Butylbenzylphthalate	37.7	UQ	18.1	37.7	370	ug/Kg
91-94-1	3,3-Dichlorobenzidine	37.7	U	24.2	37.7	370	ug/Kg
56-55-3	Benzo(a)anthracene	37.7	U	18	37.7	370	ug/Kg
218-01-9	Chrysene	37.7	U	17.1	37.7	370	ug/Kg
117-81-7	Bis(2-ethylhexyl)phthalate	270	J	13.3	37.7	370	ug/Kg
117-84-0	Di-n-octyl phthalate	37.7	U	4.3	37.7	370	ug/Kg
205-99-2	Benzo(b)fluoranthene	110	J	12.3	37.7	370	ug/Kg
207-08-9	Benzo(k)fluoranthene	37.7	U	17.7	37.7	370	ug/Kg
50-32-8	Benzo(a)pyrene	37.7	U	8.1	37.7	370	ug/Kg
193-39-5	Indeno(1,2,3-cd)pyrene	160	J	12.5	37.7	370	ug/Kg
53-70-3	Dibenzo(a,h)anthracene	37.7	U	10.8	37.7	370	ug/Kg

CHEMTECH 284 Sheffield Street, Mountainside, NJ 07092 Phone: 908 789 8900 Fax: 908 789 8922

Report of Analysis

Client:	LiRo Engineers, Inc.	Date Collected:	07/12/17
Project:	DDC OEGS - Cross Island Phase 2	Date Received:	07/13/17
Client Sample ID:	CI-SB7-0-2	SDG No.:	I4187
Lab Sample ID:	I4187-07	Matrix:	SOIL
Analytical Method:	SW8270	% Moisture:	11.9
Sample Wt/Vol:	30.13 Units: g	Final Vol:	1000 uL
Soil Aliquot Vol:	uL	Test:	SVOCMS Group1
Extraction Type :	Decanted : N	Level :	LOW
Injection Volume :	GPC Factor : 1.0	GPC Cleanup :	N PH :

File ID/Qc Batch:	Dilution:	Prep Date	Date Analyzed	Prep Batch ID
BF096797.D	1	07/14/17 09:53	07/15/17 03:10	PB100644

CAS Number	Parameter	Conc.	Qualifier	MDL	LOD	LOQ / CRQL	Units(Dry Weight)
191-24-2	Benzo(g,h,i)perylene	37.7	U	15.3	37.7	370	ug/Kg
95-94-3	1,2,4,5-Tetrachlorobenzene	37.7	U	14.8	37.7	370	ug/Kg
123-91-1	1,4-Dioxane	75.3	U	14.8	75.3	370	ug/Kg
58-90-2	2,3,4,6-Tetrachlorophenol	37.7	U	14.8	37.7	370	ug/Kg
SURROGATES							
367-12-4	2-Fluorophenol	72.1		28 - 127		48%	SPK: 150
13127-88-3	Phenol-d6	64.9		34 - 127		43%	SPK: 150
4165-60-0	Nitrobenzene-d5	59.8		31 - 132		60%	SPK: 100
321-60-8	2-Fluorobiphenyl	62.1		39 - 123		62%	SPK: 100
118-79-6	2,4,6-Tribromophenol	72.2		30 - 133		48%	SPK: 150
1718-51-0	Terphenyl-d14	33.1	*	37 - 115		33%	SPK: 100
INTERNAL STANDARDS							
3855-82-1	1,4-Dichlorobenzene-d4	117908	6.62				
1146-65-2	Naphthalene-d8	397203	7.9				
15067-26-2	Acenaphthene-d10	148471	9.65				
1517-22-2	Phenanthrene-d10	245591	11.13				
1719-03-5	Chrysene-d12	209166	13.76				
1520-96-3	Perylene-d12	178622	15.14				

U = Not Detected
LOQ = Limit of Quantitation
MDL = Method Detection Limit
LOD = Limit of Detection
E = Value Exceeds Calibration Range
Q = indicates LCS control criteria did not meet requirements
M = MS/MSD acceptance criteria did not meet requirements

J = Estimated Value
B = Analyte Found in Associated Method Blank
N = Presumptive Evidence of a Compound
* = Values outside of QC limits
D = Dilution
() = Laboratory InHouse Limit

CHEMTECH 284 Sheffield Street, Mountainside, NJ 07092 Phone: 908 789 8900 Fax: 908 789 8922

Report of Analysis

Client:	LiRo Engineers, Inc.	Date Collected:	07/12/17
Project:	DDC OEGS - Cross Island Phase 2	Date Received:	07/13/17
Client Sample ID:	CI-SB7-0-2	SDG No.:	I4187
Lab Sample ID:	I4187-07	Matrix:	SOIL
Analytical Method:	SW8260	% Moisture:	11.9
Sample Wt/Vol:	5 Units: g	Final Vol:	5000 uL
Soil Aliquot Vol:	uL	Test:	VOCMS Group1
GC Column:	RTX-VMS ID : 0.18	Level :	LOW

File ID/Qc Batch:	Dilution:	Prep Date	Date Analyzed	Prep Batch ID
VF053633.D	1		07/14/17 21:05	VF071417

CAS Number	Parameter	Conc.	Qualifier	MDL	LOD	LOQ / CRQL	Units(Dry Weight)
TARGETS							
75-71-8	Dichlorodifluoromethane	0.57	U	0.57	0.57	5.7	ug/Kg
74-87-3	Chloromethane	0.57	U	0.57	0.57	5.7	ug/Kg
75-01-4	Vinyl Chloride	0.57	U	0.57	0.57	5.7	ug/Kg
74-83-9	Bromomethane	1.1	U	1.1	1.1	5.7	ug/Kg
75-00-3	Chloroethane	0.57	U	0.57	0.57	5.7	ug/Kg
75-69-4	Trichlorofluoromethane	0.57	UQ	0.57	0.57	5.7	ug/Kg
76-13-1	1,1,2-Trichlorotrifluoroethane	0.57	U	0.57	0.57	5.7	ug/Kg
75-65-0	Tert butyl alcohol	28.4	U	8.4	28.4	28.4	ug/Kg
75-35-4	1,1-Dichloroethene	0.57	UQ	0.57	0.57	5.7	ug/Kg
67-64-1	Acetone	2.8	U	2.8	2.8	28.4	ug/Kg
75-15-0	Carbon Disulfide	0.57	U	0.57	0.57	5.7	ug/Kg
1634-04-4	Methyl tert-butyl Ether	0.57	UQ	0.57	0.57	5.7	ug/Kg
79-20-9	Methyl Acetate	1.1	U	1.1	1.1	5.7	ug/Kg
75-09-2	Methylene Chloride	3.3	J	0.57	0.57	5.7	ug/Kg
156-60-5	trans-1,2-Dichloroethene	0.57	UQ	0.57	0.57	5.7	ug/Kg
75-34-3	1,1-Dichloroethane	0.57	UQ	0.57	0.57	5.7	ug/Kg
110-82-7	Cyclohexane	0.57	U	0.57	0.57	5.7	ug/Kg
78-93-3	2-Butanone	8.5	U	3.5	8.5	28.4	ug/Kg
56-23-5	Carbon Tetrachloride	0.57	U	0.57	0.57	5.7	ug/Kg
156-59-2	cis-1,2-Dichloroethene	0.57	U	0.57	0.57	5.7	ug/Kg
74-97-5	Bromochloromethane	0.57	U	0.57	0.57	5.7	ug/Kg
67-66-3	Chloroform	0.57	UQ	0.57	0.57	5.7	ug/Kg
71-55-6	1,1,1-Trichloroethane	0.57	U	0.57	0.57	5.7	ug/Kg
108-87-2	Methylcyclohexane	0.57	U	0.57	0.57	5.7	ug/Kg
71-43-2	Benzene	0.57	U	0.43	0.57	5.7	ug/Kg
107-06-2	1,2-Dichloroethane	0.57	UQ	0.57	0.57	5.7	ug/Kg
79-01-6	Trichloroethene	0.57	U	0.57	0.57	5.7	ug/Kg
78-87-5	1,2-Dichloropropane	0.57	U	0.3	0.57	5.7	ug/Kg
5-27-4	Bromodichloromethane	0.57	U	0.57	0.57	5.7	ug/Kg
108-10-1	4-Methyl-2-Pentanone	2.8	U	2.8	2.8	28.4	ug/Kg
108-88-3	Toluene	0.57	U	0.57	0.57	5.7	ug/Kg
10061-02-6	t-1,3-Dichloropropene	0.57	U	0.57	0.57	5.7	ug/Kg

CHEMTECH 284 Sheffield Street, Mountainside, NJ 07092 Phone: 908 789 8900 Fax: 908 789 8922

Report of Analysis

Client:	LiRo Engineers, Inc.	Date Collected:	07/12/17
Project:	DDC OEGS - Cross Island Phase 2	Date Received:	07/13/17
Client Sample ID:	CI-SB7-0-2	SDG No.:	I4187
Lab Sample ID:	I4187-07	Matrix:	SOIL
Analytical Method:	SW8260	% Moisture:	11.9
Sample Wt/Vol:	5 Units: g	Final Vol:	5000 uL
Soil Aliquot Vol:	uL	Test:	VOCMS Group1
GC Column:	RTX-VMS ID : 0.18	Level :	LOW

File ID/Qc Batch:	Dilution:	Prep Date	Date Analyzed	Prep Batch ID
VF053633.D	1		07/14/17 21:05	VF071417

CAS Number	Parameter	Conc.	Qualifier	MDL	LOD	LOQ / CRQL	Units(Dry Weight)
10061-01-5	cis-1,3-Dichloropropene	0.57	U	0.57	0.57	5.7	ug/Kg
79-00-5	1,1,2-Trichloroethane	1.1	U	1	1.1	5.7	ug/Kg
591-78-6	2-Hexanone	2.8	U	2.8	2.8	28.4	ug/Kg
124-48-1	Dibromochloromethane	0.57	U	0.57	0.57	5.7	ug/Kg
106-93-4	1,2-Dibromoethane	0.57	U	0.57	0.57	5.7	ug/Kg
127-18-4	Tetrachloroethene	0.57	U	0.57	0.57	5.7	ug/Kg
108-90-7	Chlorobenzene	0.57	U	0.57	0.57	5.7	ug/Kg
100-41-4	Ethyl Benzene	0.57	U	0.57	0.57	5.7	ug/Kg
179601-23-1	m/p-Xylenes	1.1	U	0.82	1.1	11.4	ug/Kg
95-47-6	o-Xylene	0.57	U	0.57	0.57	5.7	ug/Kg
100-42-5	Styrene	0.57	U	0.51	0.57	5.7	ug/Kg
75-25-2	Bromoform	1.7	U	0.84	1.7	5.7	ug/Kg
98-82-8	Isopropylbenzene	0.57	U	0.54	0.57	5.7	ug/Kg
79-34-5	1,1,2,2-Tetrachloroethane	0.57	U	0.52	0.57	5.7	ug/Kg
541-73-1	1,3-Dichlorobenzene	0.57	U	0.42	0.57	5.7	ug/Kg
106-46-7	1,4-Dichlorobenzene	0.57	U	0.47	0.57	5.7	ug/Kg
95-50-1	1,2-Dichlorobenzene	0.57	U	0.57	0.57	5.7	ug/Kg
96-12-8	1,2-Dibromo-3-Chloropropane	5.7	U	0.99	5.7	5.7	ug/Kg
120-82-1	1,2,4-Trichlorobenzene	0.57	U	0.57	0.57	5.7	ug/Kg
87-61-6	1,2,3-Trichlorobenzene	1.1	U	0.57	1.1	5.7	ug/Kg
SURROGATES							
17060-07-0	1,2-Dichloroethane-d4	36.9		56 - 120		74%	SPK: 50
1868-53-7	Dibromofluoromethane	41.3		57 - 135		83%	SPK: 50
2037-26-5	Toluene-d8	37.4		67 - 123		75%	SPK: 50
460-00-4	4-Bromofluorobenzene	25.3		33 - 141		51%	SPK: 50
INTERNAL STANDARDS							
363-72-4	Pentafluorobenzene	391267	4.81				
540-36-3	1,4-Difluorobenzene	802296	5.54				
3114-55-4	Chlorobenzene-d5	604700	9.7				
3855-82-1	1,4-Dichlorobenzene-d4	201757	12.49				

CHEMTECH 284 Sheffield Street, Mountainside, NJ 07092 Phone: 908 789 8900 Fax: 908 789 8922

Report of Analysis

Client:	LiRo Engineers, Inc.	Date Collected:	07/12/17
Project:	DDC OEGS - Cross Island Phase 2	Date Received:	07/13/17
Client Sample ID:	CI-SB7-0-2	SDG No.:	I4187
Lab Sample ID:	I4187-07	Matrix:	SOIL
Analytical Method:	SW8260	% Moisture:	11.9
Sample Wt/Vol:	5 Units: g	Final Vol:	5000 uL
Soil Aliquot Vol:	uL	Test:	VOCMS Group1
GC Column:	RTX-VMS ID : 0.18	Level :	LOW

File ID/Qc Batch:	Dilution:	Prep Date	Date Analyzed	Prep Batch ID
VF053633.D	1		07/14/17 21:05	VF071417

CAS Number	Parameter	Conc.	Qualifier	MDL	LOD	LOQ / CRQL	Units

U = Not Detected
LOQ = Limit of Quantitation
MDL = Method Detection Limit
LOD = Limit of Detection
E = Value Exceeds Calibration Range
Q = indicates LCS control criteria did not meet requirements
M = MS/MSD acceptance criteria did not meet requirements

J = Estimated Value
B = Analyte Found in Associated Method Blank
N = Presumptive Evidence of a Compound
* = Values outside of QC limits
D = Dilution
() = Laboratory InHouse Limit

CHEMTECH 284 Sheffield Street, Mountainside, NJ 07092 Phone: 908 789 8900 Fax: 908 789 8922

Report of Analysis

Client:	LiRo Engineers, Inc.	Date Collected:	07/12/17
Project:	DDC OEGS - Cross Island Phase 2	Date Received:	07/13/17
Client Sample ID:	CI-SB8-0-2	SDG No.:	I4187
Lab Sample ID:	I4187-08	Matrix:	SOIL
Level (low/med):	low	% Solid:	94.5

Cas	Parameter	Conc.	Qua.	DF	MDL	LOD	LOQ / CRQL	Units(Dry Weight)	Prep Date	Date Ana.	Ana Met.
7429-90-5	Aluminum	6600		1	0.744	1.11	4.43	mg/Kg	07/14/17 10:05	07/17/17 15:08	SW6010
7440-36-0	Antimony	0.553	UN	1	0.496	0.553	2.21	mg/Kg	07/14/17 10:05	07/17/17 15:08	SW6010
7440-38-2	Arsenic	4.53		1	0.221	0.221	0.886	mg/Kg	07/14/17 10:05	07/17/17 15:08	SW6010
7440-39-3	Barium	73.4		1	0.354	1.11	4.43	mg/Kg	07/14/17 10:05	07/17/17 15:08	SW6010
7440-41-7	Beryllium	0.277		1	0.053	0.066	0.266	mg/Kg	07/14/17 10:05	07/17/17 15:08	SW6010
7440-43-9	Cadmium	0.7		1	0.053	0.066	0.266	mg/Kg	07/14/17 10:05	07/17/17 15:08	SW6010
7440-70-2	Calcium	1210		1	0.948	22.1	88.6	mg/Kg	07/14/17 10:05	07/17/17 15:08	SW6010
7440-47-3	Chromium	13		1	0.111	0.111	0.443	mg/Kg	07/14/17 10:05	07/17/17 15:08	SW6010
7440-48-4	Cobalt	3.71		1	0.332	0.332	1.33	mg/Kg	07/14/17 10:05	07/17/17 15:08	SW6010
7440-50-8	Copper	24.6		1	0.221	0.221	0.886	mg/Kg	07/14/17 10:05	07/17/17 15:08	SW6010
7439-89-6	Iron	12900		1	1.11	1.11	4.43	mg/Kg	07/14/17 10:05	07/17/17 15:08	SW6010
7439-92-1	Lead	284		1	0.106	0.221	0.531	mg/Kg	07/14/17 10:05	07/17/17 15:08	SW6010
7439-95-4	Magnesium	1280		1	4.06	22.1	88.6	mg/Kg	07/14/17 10:05	07/17/17 15:08	SW6010
7439-96-5	Manganese	199		1	0.168	0.221	0.886	mg/Kg	07/14/17 10:05	07/17/17 15:08	SW6010
7439-97-6	Mercury	0.286		1	0.007	0.007	0.014	mg/Kg	07/17/17 12:53	07/18/17 10:19	SW7471A
7440-02-0	Nickel	12.3		1	0.407	0.443	1.77	mg/Kg	07/14/17 10:05	07/17/17 15:08	SW6010
7440-09-7	Potassium	276		1	3.1	22.1	88.6	mg/Kg	07/14/17 10:05	07/17/17 15:08	SW6010
7782-49-2	Selenium	4.89		1	0.221	0.221	0.886	mg/Kg	07/14/17 10:05	07/17/17 15:08	SW6010
7440-22-4	Silver	1.03		1	0.111	0.111	0.443	mg/Kg	07/14/17 10:05	07/17/17 15:08	SW6010
7440-23-5	Sodium	278		1	2.23	22.1	88.6	mg/Kg	07/14/17 10:05	07/17/17 15:08	SW6010
7440-28-0	Thallium	0.309	J	1	0.239	0.443	1.77	mg/Kg	07/14/17 10:05	07/17/17 15:08	SW6010
7440-62-2	Vanadium	20.2		1	0.443	0.443	1.77	mg/Kg	07/14/17 10:05	07/17/17 15:08	SW6010
7440-66-6	Zinc	130		1	0.443	0.443	1.77	mg/Kg	07/14/17 10:05	07/17/17 15:08	SW6010

Color Before:	Brown	Clarity Before:		Texture:	Medium
Color After:	Yellow	Clarity After:		Artifacts:	No
Comments:	METALS-TAL				

U = Not Detected
LOQ = Limit of Quantitation
MDL = Method Detection Limit
LOD = Limit of Detection
D = Dilution
Q = indicates LCS control criteria did not meet requirements

J = Estimated Value
B = Analyte Found in Associated Method Blank
* = indicates the duplicate analysis is not within control limits.
E = Indicates the reported value is estimated because of the presence of interference.
OR = Over Range
N =Spiked sample recovery not within control limits

CHEMTECH 284 Sheffield Street, Mountainside, NJ 07092 Phone: 908 789 8900 Fax: 908 789 8922

Report of Analysis

Client:	LiRo Engineers, Inc.	Date Collected:	07/12/17
Project:	DDC OEGS - Cross Island Phase 2	Date Received:	07/13/17
Client Sample ID:	CI-SB8-0-2	SDG No.:	I4187
Lab Sample ID:	I4187-08	Matrix:	SOIL
Analytical Method:	SW8082A	% Moisture:	5.5 Decanted:
Sample Wt/Vol:	30.03 Units: g	Final Vol:	10000 uL
Soil Aliquot Vol:	uL	Test:	PCB
Extraction Type:		Injection Volume :	
GPC Factor :	1.0 PH :		

File ID/Qc Batch:	Dilution:	Prep Date	Date Analyzed	Prep Batch ID
PQ019429.D	1	07/14/17 10:55	07/18/17 17:17	PB100661

CAS Number	Parameter	Conc.	Qualifier	MDL	LOD	LOQ / CRQL	Units(Dry Weight)
TARGETS							
12674-11-2	Aroclor-1016	3.5	U	3.5	3.5	18	ug/kg
11104-28-2	Aroclor-1221	3.5	U	3.5	3.5	18	ug/kg
11141-16-5	Aroclor-1232	3.5	U	3.5	3.5	18	ug/kg
53469-21-9	Aroclor-1242	3.5	U	3.5	3.5	18	ug/kg
12672-29-6	Aroclor-1248	3.5	U	3.5	3.5	18	ug/kg
11097-69-1	Aroclor-1254	3.5	U	1.6	3.5	18	ug/kg
37324-23-5	Aroclor-1262	3.5	U	3.5	3.5	18	ug/kg
11100-14-4	Aroclor-1268	3.5	U	3.5	3.5	18	ug/kg
11096-82-5	Aroclor-1260	45.2	P	3.5	3.5	18	ug/kg
SURROGATES							
877-09-8	Tetrachloro-m-xylene	20		10 - 166		98%	SPK: 20
2051-24-3	Decachlorobiphenyl	17.4		60 - 125		87%	SPK: 20

Comments:

U = Not Detected
LOQ = Limit of Quantitation
MDL = Method Detection Limit
LOD = Limit of Detection
= Value Exceeds Calibration Range
P = Indicates >25% difference for detected concentrations between the two GC columns
Q = indicates LCS control criteria did not meet requirements
M = MS/MSD acceptance criteria did not meet requirements

J = Estimated Value
B = Analyte Found in Associated Method Blank
N = Presumptive Evidence of a Compound
* = Values outside of QC limits
D = Dilution
S = Indicates estimated value where valid five-point calibration was not performed prior to analyte detection in sample.
() = Laboratory InHouse Limit

CHEMTECH 284 Sheffield Street, Mountainside, NJ 07092 Phone: 908 789 8900 Fax: 908 789 8922

Report of Analysis

Client:	LiRo Engineers, Inc.	Date Collected:	07/12/17
Project:	DDC OEGS - Cross Island Phase 2	Date Received:	07/13/17
Client Sample ID:	CI-SB8-0-2	SDG No.:	I4187
Lab Sample ID:	I4187-08	Matrix:	SOIL
Analytical Method:	SW8081	% Moisture:	5.5 Decanted:
Sample Wt/Vol:	30.03 Units: g	Final Vol:	10000 uL
Soil Aliquot Vol:	uL	Test:	PESTICIDE Group1
Extraction Type:		Injection Volume :	
GPC Factor :	1.0 PH :		

File ID/Qc Batch:	Dilution:	Prep Date	Date Analyzed	Prep Batch ID
PL027279.D	1	07/14/17 08:10	07/14/17 19:18	PB100634

CAS Number	Parameter	Conc.	Qualifier	MDL	LOD	LOQ / CRQL	Units(Dry Weight)
TARGETS							
319-84-6	alpha-BHC	0.349	U	0.137	0.349	1.8	ug/kg
319-85-7	beta-BHC	0.349	U	0.19	0.349	1.8	ug/kg
319-86-8	delta-BHC	0.349	U	0.106	0.349	1.8	ug/kg
58-89-9	gamma-BHC (Lindane)	0.349	U	0.159	0.349	1.8	ug/kg
76-44-8	Heptachlor	0.349	U	0.148	0.349	1.8	ug/kg
309-00-2	Aldrin	0.349	U	0.106	0.349	1.8	ug/kg
1024-57-3	Heptachlor epoxide	0.349	U	0.169	0.349	1.8	ug/kg
959-98-8	Endosulfan I	0.349	U	0.159	0.349	1.8	ug/kg
60-57-1	Dieldrin	0.349	U	0.137	0.349	1.8	ug/kg
72-55-9	4,4-DDE	8.9		0.211	0.349	1.8	ug/kg
72-20-8	Endrin	0.349	U	0.19	0.349	1.8	ug/kg
33213-65-9	Endosulfan II	0.349	U	0.148	0.349	1.8	ug/kg
72-54-8	4,4-DDD	0.349	U	0.18	0.349	1.8	ug/kg
1031-07-8	Endosulfan Sulfate	0.349	U	0.159	0.349	1.8	ug/kg
50-29-3	4,4-DDT	10.2		0.148	0.349	1.8	ug/kg
72-43-5	Methoxychlor	0.349	U	0.18	0.349	1.8	ug/kg
53494-70-5	Endrin ketone	0.349	U	0.137	0.349	1.8	ug/kg
7421-93-4	Endrin aldehyde	0.349	U	0.159	0.349	1.8	ug/kg
5103-71-9	alpha-Chlordane	0.349	U	0.148	0.349	1.8	ug/kg
5103-74-2	gamma-Chlordane	0.349	U	0.137	0.349	1.8	ug/kg
8001-35-2	Toxaphene	3.5	U	3.5	3.5	18	ug/kg
SURROGATES							
2051-24-3	Decachlorobiphenyl	16.9		10 - 169		84%	SPK: 20
877-09-8	Tetrachloro-m-xylene	13		31 - 151		65%	SPK: 20

CHEMTECH 284 Sheffield Street, Mountainside, NJ 07092 Phone: 908 789 8900 Fax: 908 789 8922

Report of Analysis

Client:	LiRo Engineers, Inc.	Date Collected:	07/12/17
Project:	DDC OEGS - Cross Island Phase 2	Date Received:	07/13/17
Client Sample ID:	CI-SB8-0-2	SDG No.:	I4187
Lab Sample ID:	I4187-08	Matrix:	SOIL
Analytical Method:	SW8081	% Moisture:	5.5 Decanted:
Sample Wt/Vol:	30.03 Units: g	Final Vol:	10000 uL
Soil Aliquot Vol:	uL	Test:	PESTICIDE Group1
Extraction Type:		Injection Volume :	
GPC Factor :	1.0 PH :		

File ID/Qc Batch:	Dilution:	Prep Date	Date Analyzed	Prep Batch ID
PL027279.D	1	07/14/17 08:10	07/14/17 19:18	PB100634

CAS Number	Parameter	Conc.	Qualifier	MDL	LOD	LOQ / CRQL	Units

Comments:

U = Not Detected
LOQ = Limit of Quantitation
MDL = Method Detection Limit
LOD = Limit of Detection
E = Value Exceeds Calibration Range
P = Indicates >25% difference for detected concentrations between the two GC columns
Q = indicates LCS control criteria did not meet requirements
M = MS/MSD acceptance criteria did not meet requirements

J = Estimated Value
B = Analyte Found in Associated Method Blank
N = Presumptive Evidence of a Compound
* = Values outside of QC limits
D = Dilution
S = Indicates estimated value where valid five-point calibration was not performed prior to analyte detection in sample.
() = Laboratory InHouse Limit

CHEMTECH 284 Sheffield Street, Mountainside, NJ 07092 Phone: 908 789 8900 Fax: 908 789 8922

Report of Analysis

Client:	LiRo Engineers, Inc.	Date Collected:	07/12/17
Project:	DDC OEGS - Cross Island Phase 2	Date Received:	07/13/17
Client Sample ID:	CI-SB8-0-2	SDG No.:	I4187
Lab Sample ID:	I4187-08	Matrix:	SOIL
Analytical Method:	SW8270	% Moisture:	5.5
Sample Wt/Vol:	30.01 Units: g	Final Vol:	1000 uL
Soil Aliquot Vol:	uL	Test:	SVOCMS Group1
Extraction Type :	Decanted : N	Level :	LOW
Injection Volume :	GPC Factor : 1.0	GPC Cleanup :	N PH :

File ID/Qc Batch:	Dilution:	Prep Date	Date Analyzed	Prep Batch ID
BF096798.D	1	07/14/17 09:53	07/15/17 03:38	PB100644

CAS Number	Parameter	Conc.	Qualifier	MDL	LOD	LOQ / CRQL	Units(Dry Weight)
TARGETS							
100-52-7	Benzaldehyde	35.3	U	18.4	35.3	350	ug/Kg
108-95-2	Phenol	35.3	U	8.1	35.3	350	ug/Kg
111-44-4	bis(2-Chloroethyl)ether	35.3	U	16.9	35.3	350	ug/Kg
95-57-8	2-Chlorophenol	35.3	U	18.6	35.3	350	ug/Kg
95-48-7	2-Methylphenol	35.3	U	19.1	35.3	350	ug/Kg
108-60-1	2,2-oxybis(1-Chloropropane)	35.3	U	14.6	35.3	350	ug/Kg
98-86-2	Acetophenone	35.3	U	10.8	35.3	350	ug/Kg
65794-96-9	3+4-Methylphenols	35.3	U	18.3	35.3	350	ug/Kg
621-64-7	n-Nitroso-di-n-propylamine	35.3	U	17.8	35.3	350	ug/Kg
67-72-1	Hexachloroethane	35.3	U	15.8	35.3	350	ug/Kg
98-95-3	Nitrobenzene	35.3	U	13.3	35.3	350	ug/Kg
78-59-1	Isophorone	35.3	U	11.6	35.3	350	ug/Kg
88-75-5	2-Nitrophenol	35.3	U	17	35.3	350	ug/Kg
105-67-9	2,4-Dimethylphenol	35.3	U	20	35.3	350	ug/Kg
111-91-1	bis(2-Chloroethoxy)methane	35.3	U	20.3	35.3	350	ug/Kg
120-83-2	2,4-Dichlorophenol	35.3	U	13.4	35.3	350	ug/Kg
91-20-3	Naphthalene	35.3	U	12.2	35.3	350	ug/Kg
106-47-8	4-Chloroaniline	35.3	U	24.9	35.3	350	ug/Kg
87-68-3	Hexachlorobutadiene	35.3	U	12.8	35.3	350	ug/Kg
105-60-2	Caprolactam	70.5	U	16.4	70.5	350	ug/Kg
59-50-7	4-Chloro-3-methylphenol	35.3	U	15.7	35.3	350	ug/Kg
91-57-6	2-Methylnaphthalene	35.3	U	8.9	35.3	350	ug/Kg
77-47-4	Hexachlorocyclopentadiene	35.3	U	8.6	35.3	350	ug/Kg
88-06-2	2,4,6-Trichlorophenol	35.3	U	10.8	35.3	350	ug/Kg
95-95-4	2,4,5-Trichlorophenol	35.3	U	24.8	35.3	350	ug/Kg
92-52-4	1,1-Biphenyl	35.3	U	13.3	35.3	350	ug/Kg
91-58-7	2-Chloronaphthalene	35.3	U	8	35.3	350	ug/Kg
88-74-4	2-Nitroaniline	35.3	U	15.7	35.3	350	ug/Kg
131-11-3	Dimethylphthalate	550		9.5	35.3	350	ug/Kg
208-96-8	Acenaphthylene	35.3	U	8.9	35.3	350	ug/Kg
606-20-2	2,6-Dinitrotoluene	35.3	U	14.4	35.3	350	ug/Kg

CHEMTECH 284 Sheffield Street, Mountainside, NJ 07092 Phone: 908 789 8900 Fax: 908 789 8922

Report of Analysis

Client:	LiRo Engineers, Inc.	Date Collected:	07/12/17
Project:	DDC OEGS - Cross Island Phase 2	Date Received:	07/13/17
Client Sample ID:	CI-SB8-0-2	SDG No.:	I4187
Lab Sample ID:	I4187-08	Matrix:	SOIL
Analytical Method:	SW8270	% Moisture:	5.5
Sample Wt/Vol:	30.01 Units: g	Final Vol:	1000 uL
Soil Aliquot Vol:	uL	Test:	SVOCMS Group1
Extraction Type :	Decanted : N	Level :	LOW
Injection Volume :	GPC Factor : 1.0	GPC Cleanup :	N PH :

File ID/Qc Batch:	Dilution:	Prep Date	Date Analyzed	Prep Batch ID
BF096798.D	1	07/14/17 09:53	07/15/17 03:38	PB100644

CAS Number	Parameter	Conc.	Qualifier	MDL	LOD	LOQ / CRQL	Units(Dry Weight)
99-09-2	3-Nitroaniline	70.5	U	22.6	70.5	350	ug/Kg
83-32-9	Acenaphthene	35.3	U	9.9	35.3	350	ug/Kg
51-28-5	2,4-Dinitrophenol	280	U	35.9	280	350	ug/Kg
100-02-7	4-Nitrophenol	180	U	65.5	180	350	ug/Kg
132-64-9	Dibenzofuran	35.3	U	13.8	35.3	350	ug/Kg
121-14-2	2,4-Dinitrotoluene	35.3	U	10.6	35.3	350	ug/Kg
84-66-2	Diethylphthalate	35.3	U	5.5	35.3	350	ug/Kg
7005-72-3	4-Chlorophenyl-phenylether	35.3	U	19.1	35.3	350	ug/Kg
86-73-7	Fluorene	35.3	U	13.3	35.3	350	ug/Kg
100-01-6	4-Nitroaniline	70.5	UQ	45.9	70.5	350	ug/Kg
534-52-1	4,6-Dinitro-2-methylphenol	180	U	20.2	180	350	ug/Kg
86-30-6	n-Nitrosodiphenylamine	35.3	U	8.5	35.3	350	ug/Kg
101-55-3	4-Bromophenyl-phenylether	35.3	U	6.9	35.3	350	ug/Kg
118-74-1	Hexachlorobenzene	35.3	U	14.4	35.3	350	ug/Kg
1912-24-9	Atrazine	35.3	U	18.6	35.3	350	ug/Kg
87-86-5	Pentachlorophenol	35.3	U	24.1	35.3	350	ug/Kg
85-01-8	Phenanthrene	35.3	U	9.5	35.3	350	ug/Kg
120-12-7	Anthracene	35.3	U	7.2	35.3	350	ug/Kg
86-74-8	Carbazole	35.3	U	7.7	35.3	350	ug/Kg
84-74-2	Di-n-butylphthalate	35.3	U	27.7	35.3	350	ug/Kg
206-44-0	Fluoranthene	160	J	7.1	35.3	350	ug/Kg
129-00-0	Pyrene	92.2	J	8.5	35.3	350	ug/Kg
85-68-7	Butylbenzylphthalate	98.8	JQ	16.9	35.3	350	ug/Kg
91-94-1	3,3-Dichlorobenzidine	35.3	U	22.6	35.3	350	ug/Kg
56-55-3	Benzo(a)anthracene	35.3	U	16.8	35.3	350	ug/Kg
218-01-9	Chrysene	81.3	J	16	35.3	350	ug/Kg
117-81-7	Bis(2-ethylhexyl)phthalate	94.1	J	12.5	35.3	350	ug/Kg
117-84-0	Di-n-octyl phthalate	35.3	U	4	35.3	350	ug/Kg
205-99-2	Benzo(b)fluoranthene	130	J	11.5	35.3	350	ug/Kg
207-08-9	Benzo(k)fluoranthene	35.3	U	16.6	35.3	350	ug/Kg
50-32-8	Benzo(a)pyrene	91.4	J	7.6	35.3	350	ug/Kg
193-39-5	Indeno(1,2,3-cd)pyrene	160	J	11.7	35.3	350	ug/Kg
53-70-3	Dibenzo(a,h)anthracene	35.3	U	10.2	35.3	350	ug/Kg

CHEMTECH 284 Sheffield Street, Mountainside, NJ 07092 Phone: 908 789 8900 Fax: 908 789 8922

Report of Analysis

Client:	LiRo Engineers, Inc.	Date Collected:	07/12/17
Project:	DDC OEGS - Cross Island Phase 2	Date Received:	07/13/17
Client Sample ID:	CI-SB8-0-2	SDG No.:	I4187
Lab Sample ID:	I4187-08	Matrix:	SOIL
Analytical Method:	SW8270	% Moisture:	5.5
Sample Wt/Vol:	30.01 Units: g	Final Vol:	1000 uL
Soil Aliquot Vol:	uL	Test:	SVOCMS Group1
Extraction Type :	Decanted : N	Level :	LOW
Injection Volume :	GPC Factor : 1.0	GPC Cleanup :	N PH :

File ID/Qc Batch:	Dilution:	Prep Date	Date Analyzed	Prep Batch ID
BF096798.D	1	07/14/17 09:53	07/15/17 03:38	PB100644

CAS Number	Parameter	Conc.	Qualifier	MDL	LOD	LOQ / CRQL	Units(Dry Weight)
191-24-2	Benzo(g,h,i)perylene	35.3	U	14.3	35.3	350	ug/Kg
95-94-3	1,2,4,5-Tetrachlorobenzene	35.3	U	13.9	35.3	350	ug/Kg
123-91-1	1,4-Dioxane	70.5	U	13.9	70.5	350	ug/Kg
58-90-2	2,3,4,6-Tetrachlorophenol	35.3	U	13.9	35.3	350	ug/Kg
SURROGATES							
367-12-4	2-Fluorophenol	99		28 - 127		66%	SPK: 150
13127-88-3	Phenol-d6	88.2		34 - 127		59%	SPK: 150
4165-60-0	Nitrobenzene-d5	59.3		31 - 132		59%	SPK: 100
321-60-8	2-Fluorobiphenyl	74.7		39 - 123		75%	SPK: 100
118-79-6	2,4,6-Tribromophenol	89.1		30 - 133		59%	SPK: 150
1718-51-0	Terphenyl-d14	40		37 - 115		40%	SPK: 100
INTERNAL STANDARDS							
3855-82-1	1,4-Dichlorobenzene-d4	103171	6.63				
1146-65-2	Naphthalene-d8	444828	7.91				
15067-26-2	Acenaphthene-d10	147656	9.66				
1517-22-2	Phenanthrene-d10	238975	11.13				
1719-03-5	Chrysene-d12	202799	13.76				
1520-96-3	Perylene-d12	157441	15.14				

U = Not Detected
LOQ = Limit of Quantitation
MDL = Method Detection Limit
LOD = Limit of Detection
E = Value Exceeds Calibration Range
Q = indicates LCS control criteria did not meet requirements
M = MS/MSD acceptance criteria did not meet requirements

J = Estimated Value
B = Analyte Found in Associated Method Blank
N = Presumptive Evidence of a Compound
* = Values outside of QC limits
D = Dilution
() = Laboratory InHouse Limit

CHEMTECH 284 Sheffield Street, Mountainside, NJ 07092 Phone: 908 789 8900 Fax: 908 789 8922

Report of Analysis

Client:	LiRo Engineers, Inc.	Date Collected:	07/12/17
Project:	DDC OEGS - Cross Island Phase 2	Date Received:	07/13/17
Client Sample ID:	CI-SB8-0-2	SDG No.:	I4187
Lab Sample ID:	I4187-08	Matrix:	SOIL
Analytical Method:	SW8260	% Moisture:	5.5
Sample Wt/Vol:	5 Units: g	Final Vol:	5000 uL
Soil Aliquot Vol:	uL	Test:	VOCMS Group1
GC Column:	RTX-VMS ID : 0.18	Level :	LOW

File ID/Qc Batch:	Dilution:	Prep Date	Date Analyzed	Prep Batch ID
VF053634.D	1		07/14/17 21:35	VF071417

CAS Number	Parameter	Conc.	Qualifier	MDL	LOD	LOQ / CRQL	Units(Dry Weight)
TARGETS							
75-71-8	Dichlorodifluoromethane	0.53	U	0.53	0.53	5.3	ug/Kg
74-87-3	Chloromethane	0.53	U	0.53	0.53	5.3	ug/Kg
75-01-4	Vinyl Chloride	0.53	U	0.53	0.53	5.3	ug/Kg
74-83-9	Bromomethane	1.1	U	1.1	1.1	5.3	ug/Kg
75-00-3	Chloroethane	0.53	U	0.53	0.53	5.3	ug/Kg
75-69-4	Trichlorofluoromethane	0.53	UQ	0.53	0.53	5.3	ug/Kg
76-13-1	1,1,2-Trichlorotrifluoroethane	0.53	U	0.53	0.53	5.3	ug/Kg
75-65-0	Tert butyl alcohol	26.5	U	7.8	26.5	26.5	ug/Kg
75-35-4	1,1-Dichloroethene	0.53	UQ	0.53	0.53	5.3	ug/Kg
67-64-1	Acetone	2.6	U	2.6	2.6	26.5	ug/Kg
75-15-0	Carbon Disulfide	0.53	U	0.53	0.53	5.3	ug/Kg
1634-04-4	Methyl tert-butyl Ether	0.53	UQ	0.53	0.53	5.3	ug/Kg
79-20-9	Methyl Acetate	1.1	U	1.1	1.1	5.3	ug/Kg
75-09-2	Methylene Chloride	3.7	J	0.53	0.53	5.3	ug/Kg
156-60-5	trans-1,2-Dichloroethene	0.53	UQ	0.53	0.53	5.3	ug/Kg
75-34-3	1,1-Dichloroethane	0.53	UQ	0.53	0.53	5.3	ug/Kg
110-82-7	Cyclohexane	0.53	U	0.53	0.53	5.3	ug/Kg
78-93-3	2-Butanone	7.9	U	3.3	7.9	26.5	ug/Kg
56-23-5	Carbon Tetrachloride	0.53	U	0.53	0.53	5.3	ug/Kg
156-59-2	cis-1,2-Dichloroethene	0.53	U	0.53	0.53	5.3	ug/Kg
74-97-5	Bromochloromethane	0.53	U	0.53	0.53	5.3	ug/Kg
67-66-3	Chloroform	0.53	UQ	0.53	0.53	5.3	ug/Kg
71-55-6	1,1,1-Trichloroethane	0.53	U	0.53	0.53	5.3	ug/Kg
108-87-2	Methylcyclohexane	0.53	U	0.53	0.53	5.3	ug/Kg
71-43-2	Benzene	0.53	U	0.4	0.53	5.3	ug/Kg
107-06-2	1,2-Dichloroethane	0.53	UQ	0.53	0.53	5.3	ug/Kg
79-01-6	Trichloroethene	0.53	U	0.53	0.53	5.3	ug/Kg
78-87-5	1,2-Dichloropropane	0.53	U	0.28	0.53	5.3	ug/Kg
5-27-4	Bromodichloromethane	0.53	U	0.53	0.53	5.3	ug/Kg
108-10-1	4-Methyl-2-Pentanone	2.6	U	2.6	2.6	26.5	ug/Kg
108-88-3	Toluene	0.53	U	0.53	0.53	5.3	ug/Kg
10061-02-6	t-1,3-Dichloropropene	0.53	U	0.53	0.53	5.3	ug/Kg

CHEMTECH 284 Sheffield Street, Mountainside, NJ 07092 Phone: 908 789 8900 Fax: 908 789 8922

Report of Analysis

Client:	LiRo Engineers, Inc.	Date Collected:	07/12/17
Project:	DDC OEGS - Cross Island Phase 2	Date Received:	07/13/17
Client Sample ID:	CI-SB8-0-2	SDG No.:	I4187
Lab Sample ID:	I4187-08	Matrix:	SOIL
Analytical Method:	SW8260	% Moisture:	5.5
Sample Wt/Vol:	5 Units: g	Final Vol:	5000 uL
Soil Aliquot Vol:	uL	Test:	VOCMS Group1
GC Column:	RTX-VMS ID : 0.18	Level :	LOW

File ID/Qc Batch:	Dilution:	Prep Date	Date Analyzed	Prep Batch ID
VF053634.D	1		07/14/17 21:35	VF071417

CAS Number	Parameter	Conc.	Qualifier	MDL	LOD	LOQ / CRQL	Units(Dry Weight)
10061-01-5	cis-1,3-Dichloropropene	0.53	U	0.53	0.53	5.3	ug/Kg
79-00-5	1,1,2-Trichloroethane	1.1	U	0.95	1.1	5.3	ug/Kg
591-78-6	2-Hexanone	2.6	U	2.6	2.6	26.5	ug/Kg
124-48-1	Dibromochloromethane	0.53	U	0.53	0.53	5.3	ug/Kg
106-93-4	1,2-Dibromoethane	0.53	U	0.53	0.53	5.3	ug/Kg
127-18-4	Tetrachloroethene	0.53	U	0.53	0.53	5.3	ug/Kg
108-90-7	Chlorobenzene	0.53	U	0.53	0.53	5.3	ug/Kg
100-41-4	Ethyl Benzene	0.53	U	0.53	0.53	5.3	ug/Kg
179601-23-1	m/p-Xylenes	1.1	U	0.76	1.1	10.6	ug/Kg
95-47-6	o-Xylene	0.53	U	0.53	0.53	5.3	ug/Kg
100-42-5	Styrene	0.53	U	0.48	0.53	5.3	ug/Kg
75-25-2	Bromoform	1.6	U	0.78	1.6	5.3	ug/Kg
98-82-8	Isopropylbenzene	0.53	U	0.51	0.53	5.3	ug/Kg
79-34-5	1,1,2,2-Tetrachloroethane	0.53	U	0.49	0.53	5.3	ug/Kg
541-73-1	1,3-Dichlorobenzene	0.53	U	0.39	0.53	5.3	ug/Kg
106-46-7	1,4-Dichlorobenzene	0.53	U	0.43	0.53	5.3	ug/Kg
95-50-1	1,2-Dichlorobenzene	0.53	U	0.53	0.53	5.3	ug/Kg
96-12-8	1,2-Dibromo-3-Chloropropane	5.3	U	0.92	5.3	5.3	ug/Kg
120-82-1	1,2,4-Trichlorobenzene	0.53	U	0.53	0.53	5.3	ug/Kg
87-61-6	1,2,3-Trichlorobenzene	1.1	U	0.53	1.1	5.3	ug/Kg
SURROGATES							
17060-07-0	1,2-Dichloroethane-d4	37.4		56 - 120		75%	SPK: 50
1868-53-7	Dibromofluoromethane	47.1		57 - 135		94%	SPK: 50
2037-26-5	Toluene-d8	41.5		67 - 123		83%	SPK: 50
460-00-4	4-Bromofluorobenzene	32.2		33 - 141		64%	SPK: 50
INTERNAL STANDARDS							
363-72-4	Pentafluorobenzene	451645	4.81				
540-36-3	1,4-Difluorobenzene	825278	5.54				
3114-55-4	Chlorobenzene-d5	641256	9.7				
3855-82-1	1,4-Dichlorobenzene-d4	231906	12.49				

CHEMTECH 284 Sheffield Street, Mountainside, NJ 07092 Phone: 908 789 8900 Fax: 908 789 8922

Report of Analysis

Client:	LiRo Engineers, Inc.	Date Collected:	07/12/17
Project:	DDC OEGS - Cross Island Phase 2	Date Received:	07/13/17
Client Sample ID:	CI-SB8-0-2	SDG No.:	I4187
Lab Sample ID:	I4187-08	Matrix:	SOIL
Analytical Method:	SW8260	% Moisture:	5.5
Sample Wt/Vol:	5 Units: g	Final Vol:	5000 uL
Soil Aliquot Vol:	uL	Test:	VOCMS Group1
GC Column:	RTX-VMS ID : 0.18	Level :	LOW

File ID/Qc Batch:	Dilution:	Prep Date	Date Analyzed	Prep Batch ID
VF053634.D	1		07/14/17 21:35	VF071417

CAS Number	Parameter	Conc.	Qualifier	MDL	LOD	LOQ / CRQL	Units

U = Not Detected
LOQ = Limit of Quantitation
MDL = Method Detection Limit
LOD = Limit of Detection
E = Value Exceeds Calibration Range
Q = indicates LCS control criteria did not meet requirements
M = MS/MSD acceptance criteria did not meet requirements

J = Estimated Value
B = Analyte Found in Associated Method Blank
N = Presumptive Evidence of a Compound
* = Values outside of QC limits
D = Dilution
() = Laboratory InHouse Limit

CHEMTECH 284 Sheffield Street, Mountainside, NJ 07092 Phone: 908 789 8900 Fax: 908 789 8922

Report of Analysis

Client:	LiRo Engineers, Inc.	Date Collected:	07/12/17
Project:	DDC OEGS - Cross Island Phase 2	Date Received:	07/13/17
Client Sample ID:	CI-SB9-0-2	SDG No.:	I4187
Lab Sample ID:	I4187-09	Matrix:	SOIL
Level (low/med):	low	% Solid:	90.7

Cas	Parameter	Conc.	Qua.	DF	MDL	LOD	LOQ / CRQL	Units(Dry Weight)	Prep Date	Date Ana.	Ana Met.
7429-90-5	Aluminum	5770		1	0.788	1.17	4.69	mg/Kg	07/14/17 10:05	07/17/17 15:13	SW6010
7440-36-0	Antimony	0.586	UN	1	0.525	0.586	2.35	mg/Kg	07/14/17 10:05	07/17/17 15:13	SW6010
7440-38-2	Arsenic	5.79		1	0.235	0.235	0.938	mg/Kg	07/14/17 10:05	07/17/17 15:13	SW6010
7440-39-3	Barium	51		1	0.375	1.17	4.69	mg/Kg	07/14/17 10:05	07/17/17 15:13	SW6010
7440-41-7	Beryllium	0.263	J	1	0.056	0.07	0.281	mg/Kg	07/14/17 10:05	07/17/17 15:13	SW6010
7440-43-9	Cadmium	0.597		1	0.056	0.07	0.281	mg/Kg	07/14/17 10:05	07/17/17 15:13	SW6010
7440-70-2	Calcium	18300		1	1	23.5	93.8	mg/Kg	07/14/17 10:05	07/17/17 15:13	SW6010
7440-47-3	Chromium	10.4		1	0.117	0.117	0.469	mg/Kg	07/14/17 10:05	07/17/17 15:13	SW6010
7440-48-4	Cobalt	3.89		1	0.352	0.352	1.41	mg/Kg	07/14/17 10:05	07/17/17 15:13	SW6010
7440-50-8	Copper	26.3		1	0.235	0.235	0.938	mg/Kg	07/14/17 10:05	07/17/17 15:13	SW6010
7439-89-6	Iron	12500		1	1.17	1.17	4.69	mg/Kg	07/14/17 10:05	07/17/17 15:13	SW6010
7439-92-1	Lead	131		1	0.113	0.235	0.563	mg/Kg	07/14/17 10:05	07/17/17 15:13	SW6010
7439-95-4	Magnesium	10600		1	4.3	23.5	93.8	mg/Kg	07/14/17 10:05	07/17/17 15:13	SW6010
7439-96-5	Manganese	171		1	0.178	0.235	0.938	mg/Kg	07/14/17 10:05	07/17/17 15:13	SW6010
7439-97-6	Mercury	0.134		1	0.007	0.007	0.014	mg/Kg	07/17/17 12:53	07/18/17 10:22	SW7471A
7440-02-0	Nickel	12		1	0.432	0.469	1.88	mg/Kg	07/14/17 10:05	07/17/17 15:13	SW6010
7440-09-7	Potassium	255		1	3.28	23.5	93.8	mg/Kg	07/14/17 10:05	07/17/17 15:13	SW6010
7782-49-2	Selenium	2.78		1	0.235	0.235	0.938	mg/Kg	07/14/17 10:05	07/17/17 15:13	SW6010
7440-22-4	Silver	0.914		1	0.117	0.117	0.469	mg/Kg	07/14/17 10:05	07/17/17 15:13	SW6010
7440-23-5	Sodium	228		1	2.36	23.5	93.8	mg/Kg	07/14/17 10:05	07/17/17 15:13	SW6010
7440-28-0	Thallium	0.41	J	1	0.253	0.469	1.88	mg/Kg	07/14/17 10:05	07/17/17 15:13	SW6010
7440-62-2	Vanadium	17.3		1	0.469	0.469	1.88	mg/Kg	07/14/17 10:05	07/17/17 15:13	SW6010
7440-66-6	Zinc	84.5		1	0.469	0.469	1.88	mg/Kg	07/14/17 10:05	07/17/17 15:13	SW6010

Color Before:	Brown	Clarity Before:		Texture:	Medium
Color After:	Yellow	Clarity After:		Artifacts:	No
Comments:	METALS-TAL				

U = Not Detected
LOQ = Limit of Quantitation
MDL = Method Detection Limit
LOD = Limit of Detection
D = Dilution
Q = indicates LCS control criteria did not meet requirements

J = Estimated Value
B = Analyte Found in Associated Method Blank
* = indicates the duplicate analysis is not within control limits.
E = Indicates the reported value is estimated because of the presence of interference.
OR = Over Range
N =Spiked sample recovery not within control limits

CHEMTECH 284 Sheffield Street, Mountainside, NJ 07092 Phone: 908 789 8900 Fax: 908 789 8922

Report of Analysis

Client:	LiRo Engineers, Inc.	Date Collected:	07/12/17
Project:	DDC OEGS - Cross Island Phase 2	Date Received:	07/13/17
Client Sample ID:	CI-SB9-0-2	SDG No.:	I4187
Lab Sample ID:	I4187-09	Matrix:	SOIL
Analytical Method:	SW8082A	% Moisture:	9.3 Decanted:
Sample Wt/Vol:	30.1 Units: g	Final Vol:	10000 uL
Soil Aliquot Vol:	uL	Test:	PCB
Extraction Type:		Injection Volume :	
GPC Factor :	1.0 PH :		

File ID/Qc Batch:	Dilution:	Prep Date	Date Analyzed	Prep Batch ID
PQ019439.D	1	07/14/17 10:55	07/19/17 10:41	PB100661

CAS Number	Parameter	Conc.	Qualifier	MDL	LOD	LOQ / CRQL	Units(Dry Weight)
TARGETS							
12674-11-2	Aroclor-1016	3.7	U	3.7	3.7	18.7	ug/kg
11104-28-2	Aroclor-1221	3.7	U	3.7	3.7	18.7	ug/kg
11141-16-5	Aroclor-1232	3.7	U	3.7	3.7	18.7	ug/kg
53469-21-9	Aroclor-1242	3.7	U	3.7	3.7	18.7	ug/kg
12672-29-6	Aroclor-1248	3.7	U	3.7	3.7	18.7	ug/kg
11097-69-1	Aroclor-1254	3.7	U	1.6	3.7	18.7	ug/kg
37324-23-5	Aroclor-1262	3.7	U	3.7	3.7	18.7	ug/kg
11100-14-4	Aroclor-1268	3.7	U	3.7	3.7	18.7	ug/kg
11096-82-5	Aroclor-1260	14.1	J	3.7	3.7	18.7	ug/kg
SURROGATES							
877-09-8	Tetrachloro-m-xylene	21.5		10 - 166		106%	SPK: 20
2051-24-3	Decachlorobiphenyl	12.2		60 - 125		61%	SPK: 20

Comments:

U = Not Detected
LOQ = Limit of Quantitation
MDL = Method Detection Limit
LOD = Limit of Detection
= Value Exceeds Calibration Range
P = Indicates >25% difference for detected concentrations between the two GC columns
Q = indicates LCS control criteria did not meet requirements
M = MS/MSD acceptance criteria did not meet requirements

J = Estimated Value
B = Analyte Found in Associated Method Blank
N = Presumptive Evidence of a Compound
* = Values outside of QC limits
D = Dilution
S = Indicates estimated value where valid five-point calibration was not performed prior to analyte detection in sample.
() = Laboratory InHouse Limit

CHEMTECH 284 Sheffield Street, Mountainside, NJ 07092 Phone: 908 789 8900 Fax: 908 789 8922

Report of Analysis

Client:	LiRo Engineers, Inc.	Date Collected:	07/12/17
Project:	DDC OEGS - Cross Island Phase 2	Date Received:	07/13/17
Client Sample ID:	CI-SB9-0-2	SDG No.:	I4187
Lab Sample ID:	I4187-09	Matrix:	SOIL
Analytical Method:	SW8081	% Moisture:	9.3 Decanted:
Sample Wt/Vol:	30.1 Units: g	Final Vol:	10000 uL
Soil Aliquot Vol:	uL	Test:	PESTICIDE Group1
Extraction Type:		Injection Volume :	
GPC Factor :	1.0 PH :		

File ID/Qc Batch:	Dilution:	Prep Date	Date Analyzed	Prep Batch ID
PL027280.D	1	07/14/17 08:10	07/14/17 19:33	PB100634

CAS Number	Parameter	Conc.	Qualifier	MDL	LOD	LOQ / CRQL	Units(Dry Weight)
TARGETS							
319-84-6	alpha-BHC	0.363	U	0.143	0.363	1.9	ug/kg
319-85-7	beta-BHC	0.363	U	0.198	0.363	1.9	ug/kg
319-86-8	delta-BHC	0.363	U	0.11	0.363	1.9	ug/kg
58-89-9	gamma-BHC (Lindane)	0.363	U	0.165	0.363	1.9	ug/kg
76-44-8	Heptachlor	0.363	U	0.154	0.363	1.9	ug/kg
309-00-2	Aldrin	0.363	U	0.11	0.363	1.9	ug/kg
1024-57-3	Heptachlor epoxide	0.363	U	0.176	0.363	1.9	ug/kg
959-98-8	Endosulfan I	0.363	U	0.165	0.363	1.9	ug/kg
60-57-1	Dieldrin	0.363	U	0.143	0.363	1.9	ug/kg
72-55-9	4,4-DDE	1	J	0.22	0.363	1.9	ug/kg
72-20-8	Endrin	0.363	U	0.198	0.363	1.9	ug/kg
33213-65-9	Endosulfan II	0.363	U	0.154	0.363	1.9	ug/kg
72-54-8	4,4-DDD	0.363	U	0.187	0.363	1.9	ug/kg
1031-07-8	Endosulfan Sulfate	0.363	U	0.165	0.363	1.9	ug/kg
50-29-3	4,4-DDT	1.7	JP	0.154	0.363	1.9	ug/kg
72-43-5	Methoxychlor	0.363	U	0.187	0.363	1.9	ug/kg
53494-70-5	Endrin ketone	0.363	U	0.143	0.363	1.9	ug/kg
7421-93-4	Endrin aldehyde	0.363	U	0.165	0.363	1.9	ug/kg
5103-71-9	alpha-Chlordane	0.363	U	0.154	0.363	1.9	ug/kg
5103-74-2	gamma-Chlordane	0.363	U	0.143	0.363	1.9	ug/kg
8001-35-2	Toxaphene	3.7	U	3.7	3.7	18.7	ug/kg
SURROGATES							
2051-24-3	Decachlorobiphenyl	12.3		10 - 169		62%	SPK: 20
877-09-8	Tetrachloro-m-xylene	10.8		31 - 151		54%	SPK: 20

CHEMTECH 284 Sheffield Street, Mountainside, NJ 07092 Phone: 908 789 8900 Fax: 908 789 8922

Report of Analysis

Client:	LiRo Engineers, Inc.	Date Collected:	07/12/17
Project:	DDC OEGS - Cross Island Phase 2	Date Received:	07/13/17
Client Sample ID:	CI-SB9-0-2	SDG No.:	I4187
Lab Sample ID:	I4187-09	Matrix:	SOIL
Analytical Method:	SW8081	% Moisture:	9.3 Decanted:
Sample Wt/Vol:	30.1 Units: g	Final Vol:	10000 uL
Soil Aliquot Vol:	uL	Test:	PESTICIDE Group1
Extraction Type:		Injection Volume :	
GPC Factor :	1.0 PH :		

File ID/Qc Batch:	Dilution:	Prep Date	Date Analyzed	Prep Batch ID
PL027280.D	1	07/14/17 08:10	07/14/17 19:33	PB100634

CAS Number	Parameter	Conc.	Qualifier	MDL	LOD	LOQ / CRQL	Units

Comments:

U = Not Detected
LOQ = Limit of Quantitation
MDL = Method Detection Limit
LOD = Limit of Detection
= Value Exceeds Calibration Range
P = Indicates >25% difference for detected concentrations between the two GC columns
Q = indicates LCS control criteria did not meet requirements
M = MS/MSD acceptance criteria did not meet requirements

J = Estimated Value
B = Analyte Found in Associated Method Blank
N = Presumptive Evidence of a Compound
* = Values outside of QC limits
D = Dilution
S = Indicates estimated value where valid five-point calibration was not performed prior to analyte detection in sample.
() = Laboratory InHouse Limit

CHEMTECH 284 Sheffield Street, Mountainside, NJ 07092 Phone: 908 789 8900 Fax: 908 789 8922

Report of Analysis

Client:	LiRo Engineers, Inc.	Date Collected:	07/12/17
Project:	DDC OEGS - Cross Island Phase 2	Date Received:	07/13/17
Client Sample ID:	CI-SB9-0-2	SDG No.:	I4187
Lab Sample ID:	I4187-09	Matrix:	SOIL
Analytical Method:	SW8270	% Moisture:	9.3
Sample Wt/Vol:	30.05 Units: g	Final Vol:	1000 uL
Soil Aliquot Vol:	uL	Test:	SVOCMS Group1
Extraction Type :	Decanted : N	Level :	LOW
Injection Volume :	GPC Factor : 1.0	GPC Cleanup :	N PH :

File ID/Qc Batch:	Dilution:	Prep Date	Date Analyzed	Prep Batch ID
BF096799.D	1	07/14/17 09:53	07/15/17 04:06	PB100644

CAS Number	Parameter	Conc.	Qualifier	MDL	LOD	LOQ / CRQL	Units(Dry Weight)
TARGETS							
100-52-7	Benzaldehyde	36.7	U	19.2	36.7	360	ug/Kg
108-95-2	Phenol	36.7	U	8.5	36.7	360	ug/Kg
111-44-4	bis(2-Chloroethyl)ether	36.7	U	17.6	36.7	360	ug/Kg
95-57-8	2-Chlorophenol	36.7	U	19.4	36.7	360	ug/Kg
95-48-7	2-Methylphenol	36.7	U	19.9	36.7	360	ug/Kg
108-60-1	2,2-oxybis(1-Chloropropane)	36.7	U	15.2	36.7	360	ug/Kg
98-86-2	Acetophenone	36.7	U	11.2	36.7	360	ug/Kg
65794-96-9	3+4-Methylphenols	36.7	U	19	36.7	360	ug/Kg
621-64-7	n-Nitroso-di-n-propylamine	36.7	U	18.5	36.7	360	ug/Kg
67-72-1	Hexachloroethane	36.7	U	16.4	36.7	360	ug/Kg
98-95-3	Nitrobenzene	36.7	U	13.9	36.7	360	ug/Kg
78-59-1	Isophorone	36.7	U	12.1	36.7	360	ug/Kg
88-75-5	2-Nitrophenol	36.7	U	17.7	36.7	360	ug/Kg
105-67-9	2,4-Dimethylphenol	36.7	U	20.8	36.7	360	ug/Kg
111-91-1	bis(2-Chloroethoxy)methane	36.7	U	21.1	36.7	360	ug/Kg
120-83-2	2,4-Dichlorophenol	36.7	U	14	36.7	360	ug/Kg
91-20-3	Naphthalene	36.7	U	12.7	36.7	360	ug/Kg
106-47-8	4-Chloroaniline	36.7	U	25.9	36.7	360	ug/Kg
87-68-3	Hexachlorobutadiene	36.7	U	13.3	36.7	360	ug/Kg
105-60-2	Caprolactam	73.4	U	17.1	73.4	360	ug/Kg
59-50-7	4-Chloro-3-methylphenol	36.7	U	16.3	36.7	360	ug/Kg
91-57-6	2-Methylnaphthalene	36.7	U	9.2	36.7	360	ug/Kg
77-47-4	Hexachlorocyclopentadiene	36.7	U	8.9	36.7	360	ug/Kg
88-06-2	2,4,6-Trichlorophenol	36.7	U	11.2	36.7	360	ug/Kg
95-95-4	2,4,5-Trichlorophenol	36.7	U	25.8	36.7	360	ug/Kg
92-52-4	1,1-Biphenyl	36.7	U	13.9	36.7	360	ug/Kg
91-58-7	2-Chloronaphthalene	36.7	U	8.4	36.7	360	ug/Kg
88-74-4	2-Nitroaniline	36.7	U	16.3	36.7	360	ug/Kg
131-11-3	Dimethylphthalate	430		9.9	36.7	360	ug/Kg
208-96-8	Acenaphthylene	36.7	U	9.2	36.7	360	ug/Kg
606-20-2	2,6-Dinitrotoluene	36.7	U	15	36.7	360	ug/Kg

CHEMTECH 284 Sheffield Street, Mountainside, NJ 07092 Phone: 908 789 8900 Fax: 908 789 8922

Report of Analysis

Client:	LiRo Engineers, Inc.	Date Collected:	07/12/17
Project:	DDC OEGS - Cross Island Phase 2	Date Received:	07/13/17
Client Sample ID:	CI-SB9-0-2	SDG No.:	I4187
Lab Sample ID:	I4187-09	Matrix:	SOIL
Analytical Method:	SW8270	% Moisture:	9.3
Sample Wt/Vol:	30.05 Units: g	Final Vol:	1000 uL
Soil Aliquot Vol:	uL	Test:	SVOCMS Group1
Extraction Type :	Decanted : N	Level :	LOW
Injection Volume :	GPC Factor : 1.0	GPC Cleanup :	N PH :

File ID/Qc Batch:	Dilution:	Prep Date	Date Analyzed	Prep Batch ID
BF096799.D	1	07/14/17 09:53	07/15/17 04:06	PB100644

CAS Number	Parameter	Conc.	Qualifier	MDL	LOD	LOQ / CRQL	Units(Dry Weight)
99-09-2	3-Nitroaniline	73.4	U	23.6	73.4	360	ug/Kg
83-32-9	Acenaphthene	36.7	U	10.3	36.7	360	ug/Kg
51-28-5	2,4-Dinitrophenol	290	U	37.3	290	360	ug/Kg
100-02-7	4-Nitrophenol	180	U	68.1	180	360	ug/Kg
132-64-9	Dibenzofuran	36.7	U	14.3	36.7	360	ug/Kg
121-14-2	2,4-Dinitrotoluene	36.7	U	11	36.7	360	ug/Kg
84-66-2	Diethylphthalate	36.7	U	5.7	36.7	360	ug/Kg
7005-72-3	4-Chlorophenyl-phenylether	36.7	U	19.9	36.7	360	ug/Kg
86-73-7	Fluorene	36.7	U	13.9	36.7	360	ug/Kg
100-01-6	4-Nitroaniline	73.4	UQ	47.8	73.4	360	ug/Kg
534-52-1	4,6-Dinitro-2-methylphenol	180	U	21	180	360	ug/Kg
86-30-6	n-Nitrosodiphenylamine	36.7	U	8.8	36.7	360	ug/Kg
101-55-3	4-Bromophenyl-phenylether	36.7	U	7.2	36.7	360	ug/Kg
118-74-1	Hexachlorobenzene	36.7	U	15	36.7	360	ug/Kg
1912-24-9	Atrazine	36.7	U	19.4	36.7	360	ug/Kg
87-86-5	Pentachlorophenol	36.7	U	25.1	36.7	360	ug/Kg
85-01-8	Phenanthrene	36.7	U	9.9	36.7	360	ug/Kg
120-12-7	Anthracene	36.7	U	7.5	36.7	360	ug/Kg
86-74-8	Carbazole	36.7	U	8	36.7	360	ug/Kg
84-74-2	Di-n-butylphthalate	36.7	U	28.8	36.7	360	ug/Kg
206-44-0	Fluoranthene	230	J	7.4	36.7	360	ug/Kg
129-00-0	Pyrene	150	J	8.8	36.7	360	ug/Kg
85-68-7	Butylbenzylphthalate	36.7	UQ	17.6	36.7	360	ug/Kg
91-94-1	3,3-Dichlorobenzidine	36.7	U	23.6	36.7	360	ug/Kg
56-55-3	Benzo(a)anthracene	120	J	17.5	36.7	360	ug/Kg
218-01-9	Chrysene	130	J	16.6	36.7	360	ug/Kg
117-81-7	Bis(2-ethylhexyl)phthalate	36.7	U	13	36.7	360	ug/Kg
117-84-0	Di-n-octyl phthalate	36.7	U	4.2	36.7	360	ug/Kg
205-99-2	Benzo(b)fluoranthene	180	J	12	36.7	360	ug/Kg
207-08-9	Benzo(k)fluoranthene	36.7	U	17.3	36.7	360	ug/Kg
50-32-8	Benzo(a)pyrene	140	J	7.9	36.7	360	ug/Kg
193-39-5	Indeno(1,2,3-cd)pyrene	180	J	12.2	36.7	360	ug/Kg
53-70-3	Dibenzo(a,h)anthracene	36.7	U	10.6	36.7	360	ug/Kg

CHEMTECH 284 Sheffield Street, Mountainside, NJ 07092 Phone: 908 789 8900 Fax: 908 789 8922

Report of Analysis

Client:	LiRo Engineers, Inc.	Date Collected:	07/12/17
Project:	DDC OEGS - Cross Island Phase 2	Date Received:	07/13/17
Client Sample ID:	CI-SB9-0-2	SDG No.:	I4187
Lab Sample ID:	I4187-09	Matrix:	SOIL
Analytical Method:	SW8270	% Moisture:	9.3
Sample Wt/Vol:	30.05 Units: g	Final Vol:	1000 uL
Soil Aliquot Vol:	uL	Test:	SVOCMS Group1
Extraction Type :	Decanted : N	Level :	LOW
Injection Volume :	GPC Factor : 1.0	GPC Cleanup :	N PH :

File ID/Qc Batch:	Dilution:	Prep Date	Date Analyzed	Prep Batch ID
BF096799.D	1	07/14/17 09:53	07/15/17 04:06	PB100644

CAS Number	Parameter	Conc.	Qualifier	MDL	LOD	LOQ / CRQL	Units(Dry Weight)
191-24-2	Benzo(g,h,i)perylene	76.6	J	14.9	36.7	360	ug/Kg
95-94-3	1,2,4,5-Tetrachlorobenzene	36.7	U	14.4	36.7	360	ug/Kg
123-91-1	1,4-Dioxane	73.4	U	14.4	73.4	360	ug/Kg
58-90-2	2,3,4,6-Tetrachlorophenol	36.7	U	14.4	36.7	360	ug/Kg
SURROGATES							
367-12-4	2-Fluorophenol	82.9		28 - 127		55%	SPK: 150
13127-88-3	Phenol-d6	88		34 - 127		59%	SPK: 150
4165-60-0	Nitrobenzene-d5	52.1		31 - 132		52%	SPK: 100
321-60-8	2-Fluorobiphenyl	74.5		39 - 123		74%	SPK: 100
118-79-6	2,4,6-Tribromophenol	87.6		30 - 133		58%	SPK: 150
1718-51-0	Terphenyl-d14	34.6	*	37 - 115		35%	SPK: 100
INTERNAL STANDARDS							
3855-82-1	1,4-Dichlorobenzene-d4	96299	6.63				
1146-65-2	Naphthalene-d8	430083	7.9				
15067-26-2	Acenaphthene-d10	141097	9.66				
1517-22-2	Phenanthrene-d10	208579	11.13				
1719-03-5	Chrysene-d12	204473	13.76				
1520-96-3	Perylene-d12	158892	15.14				

U = Not Detected
LOQ = Limit of Quantitation
MDL = Method Detection Limit
LOD = Limit of Detection
E = Value Exceeds Calibration Range
Q = indicates LCS control criteria did not meet requirements
M = MS/MSD acceptance criteria did not meet requirements

J = Estimated Value
B = Analyte Found in Associated Method Blank
N = Presumptive Evidence of a Compound
* = Values outside of QC limits
D = Dilution
() = Laboratory InHouse Limit

CHEMTECH 284 Sheffield Street, Mountainside, NJ 07092 Phone: 908 789 8900 Fax: 908 789 8922

Report of Analysis

Client:	LiRo Engineers, Inc.	Date Collected:	07/12/17
Project:	DDC OEGS - Cross Island Phase 2	Date Received:	07/13/17
Client Sample ID:	CI-SB9-0-2	SDG No.:	I4187
Lab Sample ID:	I4187-09	Matrix:	SOIL
Analytical Method:	SW8260	% Moisture:	9.3
Sample Wt/Vol:	5 Units: g	Final Vol:	5000 uL
Soil Aliquot Vol:	uL	Test:	VOCMS Group1
GC Column:	RTX-VMS ID : 0.18	Level :	LOW

File ID/Qc Batch:	Dilution:	Prep Date	Date Analyzed	Prep Batch ID
VF053635.D	1		07/14/17 22:04	VF071417

CAS Number	Parameter	Conc.	Qualifier	MDL	LOD	LOQ / CRQL	Units(Dry Weight)
TARGETS							
75-71-8	Dichlorodifluoromethane	0.55	U	0.55	0.55	5.5	ug/Kg
74-87-3	Chloromethane	0.55	U	0.55	0.55	5.5	ug/Kg
75-01-4	Vinyl Chloride	0.55	U	0.55	0.55	5.5	ug/Kg
74-83-9	Bromomethane	1.1	U	1.1	1.1	5.5	ug/Kg
75-00-3	Chloroethane	0.55	U	0.55	0.55	5.5	ug/Kg
75-69-4	Trichlorofluoromethane	0.55	UQ	0.55	0.55	5.5	ug/Kg
76-13-1	1,1,2-Trichlorotrifluoroethane	0.55	U	0.55	0.55	5.5	ug/Kg
75-65-0	Tert butyl alcohol	27.6	U	8.2	27.6	27.6	ug/Kg
75-35-4	1,1-Dichloroethene	0.55	UQ	0.55	0.55	5.5	ug/Kg
67-64-1	Acetone	2.8	U	2.8	2.8	27.6	ug/Kg
75-15-0	Carbon Disulfide	0.55	U	0.55	0.55	5.5	ug/Kg
1634-04-4	Methyl tert-butyl Ether	0.55	UQ	0.55	0.55	5.5	ug/Kg
79-20-9	Methyl Acetate	1.1	U	1.1	1.1	5.5	ug/Kg
75-09-2	Methylene Chloride	4.2	J	0.55	0.55	5.5	ug/Kg
156-60-5	trans-1,2-Dichloroethene	0.55	UQ	0.55	0.55	5.5	ug/Kg
75-34-3	1,1-Dichloroethane	0.55	UQ	0.55	0.55	5.5	ug/Kg
110-82-7	Cyclohexane	0.55	U	0.55	0.55	5.5	ug/Kg
78-93-3	2-Butanone	8.3	U	3.4	8.3	27.6	ug/Kg
56-23-5	Carbon Tetrachloride	0.55	U	0.55	0.55	5.5	ug/Kg
156-59-2	cis-1,2-Dichloroethene	0.55	U	0.55	0.55	5.5	ug/Kg
74-97-5	Bromochloromethane	0.55	U	0.55	0.55	5.5	ug/Kg
67-66-3	Chloroform	0.55	UQ	0.55	0.55	5.5	ug/Kg
71-55-6	1,1,1-Trichloroethane	0.55	U	0.55	0.55	5.5	ug/Kg
108-87-2	Methylcyclohexane	0.55	U	0.55	0.55	5.5	ug/Kg
71-43-2	Benzene	0.55	U	0.42	0.55	5.5	ug/Kg
107-06-2	1,2-Dichloroethane	0.55	UQ	0.55	0.55	5.5	ug/Kg
79-01-6	Trichloroethene	0.55	U	0.55	0.55	5.5	ug/Kg
78-87-5	1,2-Dichloropropane	0.55	U	0.29	0.55	5.5	ug/Kg
75-27-4	Bromodichloromethane	0.55	U	0.55	0.55	5.5	ug/Kg
108-10-1	4-Methyl-2-Pentanone	2.8	U	2.8	2.8	27.6	ug/Kg
108-88-3	Toluene	0.55	U	0.55	0.55	5.5	ug/Kg
10061-02-6	t-1,3-Dichloropropene	0.55	U	0.55	0.55	5.5	ug/Kg

CHEMTECH 284 Sheffield Street, Mountainside, NJ 07092 Phone: 908 789 8900 Fax: 908 789 8922

Report of Analysis

Client:	LiRo Engineers, Inc.	Date Collected:	07/12/17
Project:	DDC OEGS - Cross Island Phase 2	Date Received:	07/13/17
Client Sample ID:	CI-SB9-0-2	SDG No.:	I4187
Lab Sample ID:	I4187-09	Matrix:	SOIL
Analytical Method:	SW8260	% Moisture:	9.3
Sample Wt/Vol:	5 Units: g	Final Vol:	5000 uL
Soil Aliquot Vol:	uL	Test:	VOCMS Group1
GC Column:	RTX-VMS ID : 0.18	Level :	LOW

File ID/Qc Batch:	Dilution:	Prep Date	Date Analyzed	Prep Batch ID
VF053635.D	1		07/14/17 22:04	VF071417

CAS Number	Parameter	Conc.	Qualifier	MDL	LOD	LOQ / CRQL	Units(Dry Weight)
10061-01-5	cis-1,3-Dichloropropene	0.55	U	0.55	0.55	5.5	ug/Kg
79-00-5	1,1,2-Trichloroethane	1.1	U	0.99	1.1	5.5	ug/Kg
591-78-6	2-Hexanone	2.8	U	2.8	2.8	27.6	ug/Kg
124-48-1	Dibromochloromethane	0.55	U	0.55	0.55	5.5	ug/Kg
106-93-4	1,2-Dibromoethane	0.55	U	0.55	0.55	5.5	ug/Kg
127-18-4	Tetrachloroethene	0.55	U	0.55	0.55	5.5	ug/Kg
108-90-7	Chlorobenzene	0.55	U	0.55	0.55	5.5	ug/Kg
100-41-4	Ethyl Benzene	0.55	U	0.55	0.55	5.5	ug/Kg
179601-23-1	m/p-Xylenes	1.1	U	0.79	1.1	11	ug/Kg
95-47-6	o-Xylene	0.55	U	0.55	0.55	5.5	ug/Kg
100-42-5	Styrene	0.55	U	0.5	0.55	5.5	ug/Kg
75-25-2	Bromoform	1.7	U	0.82	1.7	5.5	ug/Kg
98-82-8	Isopropylbenzene	0.55	U	0.53	0.55	5.5	ug/Kg
79-34-5	1,1,2,2-Tetrachloroethane	0.55	U	0.51	0.55	5.5	ug/Kg
541-73-1	1,3-Dichlorobenzene	0.55	U	0.41	0.55	5.5	ug/Kg
106-46-7	1,4-Dichlorobenzene	0.55	U	0.45	0.55	5.5	ug/Kg
95-50-1	1,2-Dichlorobenzene	0.55	U	0.55	0.55	5.5	ug/Kg
96-12-8	1,2-Dibromo-3-Chloropropane	5.5	U	0.96	5.5	5.5	ug/Kg
120-82-1	1,2,4-Trichlorobenzene	0.55	U	0.55	0.55	5.5	ug/Kg
87-61-6	1,2,3-Trichlorobenzene	1.1	U	0.55	1.1	5.5	ug/Kg
SURROGATES							
17060-07-0	1,2-Dichloroethane-d4	43.2		56 - 120		86%	SPK: 50
1868-53-7	Dibromofluoromethane	47.4		57 - 135		95%	SPK: 50
2037-26-5	Toluene-d8	42.4		67 - 123		85%	SPK: 50
460-00-4	4-Bromofluorobenzene	34.3		33 - 141		69%	SPK: 50
INTERNAL STANDARDS							
363-72-4	Pentafluorobenzene	316983	4.81				
540-36-3	1,4-Difluorobenzene	657589	5.54				
3114-55-4	Chlorobenzene-d5	552643	9.7				
3855-82-1	1,4-Dichlorobenzene-d4	212221	12.49				

CHEMTECH 284 Sheffield Street, Mountainside, NJ 07092 Phone: 908 789 8900 Fax: 908 789 8922

Report of Analysis

Client:	LiRo Engineers, Inc.	Date Collected:	07/12/17
Project:	DDC OEGS - Cross Island Phase 2	Date Received:	07/13/17
Client Sample ID:	CI-SB9-0-2	SDG No.:	I4187
Lab Sample ID:	I4187-09	Matrix:	SOIL
Analytical Method:	SW8260	% Moisture:	9.3
Sample Wt/Vol:	5 Units: g	Final Vol:	5000 uL
Soil Aliquot Vol:	uL	Test:	VOCMS Group1
GC Column:	RTX-VMS ID : 0.18	Level :	LOW

File ID/Qc Batch:	Dilution:	Prep Date	Date Analyzed	Prep Batch ID
VF053635.D	1		07/14/17 22:04	VF071417

CAS Number	Parameter	Conc.	Qualifier	MDL	LOD	LOQ / CRQL	Units

U = Not Detected
LOQ = Limit of Quantitation
MDL = Method Detection Limit
LOD = Limit of Detection
E = Value Exceeds Calibration Range
Q = indicates LCS control criteria did not meet requirements
M = MS/MSD acceptance criteria did not meet requirements

J = Estimated Value
B = Analyte Found in Associated Method Blank
N = Presumptive Evidence of a Compound
* = Values outside of QC limits
D = Dilution
() = Laboratory InHouse Limit

(NO TEXT ON THIS PAGE)

JB-PAGES (2.0)

JOINT BID

NOTICE

THE PAGES CONTAINED IN THIS JOINT BID (JB-PAGES) REPRESENT ADDITIONAL CONTRACT REQUIREMENTS APPLYING TO WORK PERFORMED IN THE PRESENCE OF PRIVATELY OWNED UTILITY FACILITIES.

(NO TEXT ON THIS PAGE)

JOINT BID

DATED: October 27, 2017

1. The Contractor shall be responsible for compliance with all the provisions of the following Articles, Appendixes, Specifications, Sketches and Scope of Work, which are hereby made a part of the original contract documents:

   A. The "JOINT BID WITH PRIVATE UTILITY COMPANIES SPECIAL PROVISIONS" (Pages JB-1 through JB-3); and

   B. The Private Utilities reference document called "JOINT-BIDDING SPECIFICATIONS AND SKETCHES FOR LOWER MANHATTAN", dated August 1, 2005, and which is available for pick up between 8:30 A.M. and 4:00 P.M. at 30-30 Thomson Avenue, First Floor Bid Procurement Room, L.I.C., N.Y. 11101;

   C. The following Private Utility work items (contained on Pages JB-4 through JB-19):
   JB 350- Accommodation of Con Edison overhead utility facilities, poles and appurtenances.
   JB 351- Utility pole supports
   JB 402T- Horizontal and vertical adjustment of telecommunications facilities
   JB 636M- Modification of work methods to accommodate utility hardware during pavement milling and resurfacing operations
   JB 802- Special modification of work for installation of new curbs and sidewalks

   D. Private Utility Representative (Page JB-20)

   E. Private Utilities Scope of Work (Page JB-21), Con Edison (Pages JB-22 through JB-32), Verizon (Pages JB-33 through JB-35), Charter Spectrum (Pages JB-36 through JB-37); and, Test Pits (Page JB-38); Con Edison Test Pits (Pages JB-39 through JB-40); Verizon Test Pit (Page JB-41); and,

   F. Private Utility drawings (13 Sheets) consisting of:
   - Drawing JB1, General Notes & Conditions (All Utilities) (1 Sheet).
   - Drawing JB2 to JB3, Conduit and Duct Plates (CONED) (2 Sheets).
   - Drawing JB4 to JB5, Low Tension Main and Service Plates (CONED) (2 Sheets)
   - Drawing JB6 to JB7, Gas Mains and Service Plates (CONED) (2 Sheets)
   - Drawing JB8 to JB9, Propose Facility Plates (CONED) (2 Sheets)
   - Drawing JB10 to JB11, Advance Relocation Electric and Gas (CONED) (2 Sheets)
   - Drawing JB12, Existing Facility Plate (VERIZON) (1 Sheet)
   - Drawing JB13, Existing Facility Plate (CHARTER SPRECTRUM) (1 Sheet)

2. Refer to the Private Utility reference document called "JOINT-BIDDING SPECIFICATIONS AND SKETCHES FOR LOWER MANHATTAN", Specification for JB 450, pages 56, 57, and 58;

Note: Items under JB 450 are task driven operation items and are not based on crew size. These items are divided into three unique types, each of which provides a description of applicability and typical use. The "Method of Measurement", on page 57, states that "The actual crew performing the operation will not be considered by the facility operator, in consultation with the Resident Engineer, when determining the applicable Unit Item Type, which shall be only as per the task performed."

3. Refer to the Private Utility reference document called "JOINT-BIDDING SPECIFICATIONS AND SKETCHES FOR LOWER MANHATTAN", Specification for JB 225, page 10, Article A. Description;
Delete the last four lines of text in their entirety, beginning with the words: "accordance with Specification under Addendum #1, . . .";
Substitute the following revised text: "accordance with Specification Section 7.18 – Controlled Low Strength Material (CLSM), in the Standard Highway Specification. All backfill within the maximum excavation limits shown in Sketch No. JB 225 shall be of controlled low strength material (CLSM) in compliance with requirements of Section 7.18, and its cost shall be deemed included in this item."

4. Refer to the Private Utility reference document called "JOINT-BIDDING SPECIFICATIONS AND SKETCHES FOR LOWER MANHATTAN", Specification for JB 225, page 10, Article B. Materials;
Delete the first sentence in its entirety, beginning with the words: "Furnish Controlled Low Strength Material fill or backfill . . .";
Substitute the following revised sentence: "Furnish Controlled Low Strength Material fill or backfill as required and specified in Section 7.18 – Controlled Low Strength Material (CLSM), of the Standard Highway Specification."

5. Refer to the Private Utility reference document called "JOINT-BIDDING SPECIFICATIONS AND SKETCHES FOR LOWER MANHATTAN", Specification for JB 226, page 12, Article A. Description;
Delete the last five lines of text in their entirety, beginning with the words: "accordance with Specification under Addendum #1, . . .";
Substitute the following revised text: "accordance with Specification Section 7.18 – Controlled Low Strength Material (CLSM), in the Standard Highway Specification. All backfill within the maximum excavation limits shown in Sketch No. JB 225 shall be of controlled low strength material (CLSM) backfill in compliance with Section 7.18 in the Standard Highway Specifications, and its cost shall be deemed included in this item."

6. Refer to the Private Utility reference document called "JOINT-BIDDING SPECIFICATIONS AND SKETCHES FOR LOWER MANHATTAN", Specification for JB 226, page 12, Article B. Materials;
Delete the first sentence in its entirety, beginning with the words: "Furnish controlled low strength material fill or backfill . . .";
Substitute the following revised sentence: "Furnish controlled low strength material fill or backfill as required and specified in Section 7.18 – Controlled Low Strength Material (CLSM), of the Standard Highway Specification."

Notices to Bidders

The City is bidding jointly Project ID: SEQ-200531. The City has combined its Public Work, Interference Work, and Utility Work into one bid contract package. All prospective bidders should be alerted to the fact that the City prepared all specifications, drawings, and all other necessary contract documents for the Public Work, Interference Work, and Utility Work.

The City has prepared contract documents which include specifications, drawings and all other necessary contract documents for the Public Work, Interference Work, and Utility Work. The bid items, specifications, and estimated quantities have been designed to fully compensate the Contractor for its costs to perform the Public Work, Interference Work, and Utility Work.

The Contractor agrees that its bid items and prices for the Public Work, Interference Work, and Utility Work shall include all incremental costs and/ or additional compensation for performing Public Work including: coordination of its work with the Utilities, loss of productivity and efficiency, idle time, delays (including any delays occasioned by negotiation of a contract change), change in operations, mobilization, remobilization, demobilization, added cost or expense, loss of profit, other damages or impact costs that may be suffered by the Contractor because of direct or indirect obstructions due to the presence of Utility Facilities, such as conduits, ducts or duct banks containing conductors for live and/or abandoned electric, telephone, cable TV, any type of communication cables, "Non Cost Sharing" gas mains and services, steam mains, and various non-hazardous encasement materials or utility structures located within the Public Work project area.

In the bid solicitation documents, the City has provided estimates of quantities for both Specific Public Work Items and Specific Utility Work Items. Bidders shall be required to bid a unit price on Items. For the purposes of identifying the lowest responsive and responsible bidder, a bidder's unit prices bid shall be calculated on the City's Specific Public Work Items and estimates and the Utilities' Specific Utility Work Items and estimates.

[NO FURTHER TEXT HERE.]

Specialty work items

[NO FURTHER TEXT HERE.]

JB 350 – OVERHEAD ACCOMMODATION PROTECTION OF OVERHEAD FACILITIES, POLES AND APPURTENANCES

A. Description

The Contractor shall provide all supervision, labor, materials, tools, equipment and incidentals required to perform its work in the presence of overhead utilities, including, but not limited to, Electric Facilities (primary, secondary and service connections), telephone facilities, cable television facilities, including fiber optic communications facilities, utility poles and equipment on the poles and related appurtenances. These utilities are subsequently referred to in this specification as "overhead facilities".

B. Materials – N/A

C. Method of Construction

The Contractor shall inspect the site prior to bidding and shall utilize sketches CET 350A-1, CET 350B-1, CET 350C-1 to evaluate the potential impact, if any, of overhead facilities upon performance of the work. The Contractor shall employ a method of operation, including use of appropriate equipment and tools that will enable him to maintain adequate clearances from the overhead facilities during all phases of construction. The Contractor is responsible for performing the work in accordance with all applicable Federal, New York State and Local regulations. The Contractor and/or his agents shall be solely responsible for damages to any overhead lines and appurtenances due to failure to comply with applicable rules, procedures, and practices.

D. Method of Measurement

The quantity to be measured for payment shall be a lump sum measurement to complete the work in the presence of overhead facilities.

E. Price to Cover

The price shall be a lump sum for all supervision, labor, materials, tools, equipment and incidentals required to perform the work in the presence of overhead utilities and to maintain adequate clearance from the overhead facilities during all phases of construction. The price includes, but is not limited, to modification of any methods of operation, use of appropriate equipment, maintenance of traffic, extended performance, loss of productivity, protective measures, delays, change in sequencing and scheduling, and any other costs that may be incurred by the Contractor. Partial payments shall be made in proportion to the percentage (%) of contract completion as determined by the facility operator in consultation with the Resident Engineer. For projects involving installation of piles, the price shall cover the lowering and raising of the pile driver boom under main line cables only, if so requested by the Cablevision representative. Cablevision reserves the right to determine if service wires will be removed. Cablevision forces will be responsible for removing service wires. A Cablevision representative will provide a map of facilities where required. Payment for all work specified shall be made on a one-time basis, no payment for work shall be made for the same operation or for the same utility facility more than once.

F. References

1. New York City DDC Protocol for Implementation of Working Near Con Edison Energized Overhead Electric Distribution Systems
2. Con Edison Overhead Electric Condition Report included with contract plans
3. Guidelines for Working Near Con Edison Energized Overhead Electric Distribution Systems
4. Copy of the OSHA Letter dated August 9, 2004
5. Sketch CET-350A-1
6. Sketch CET-350B-1
7. Sketch CET-350C-1

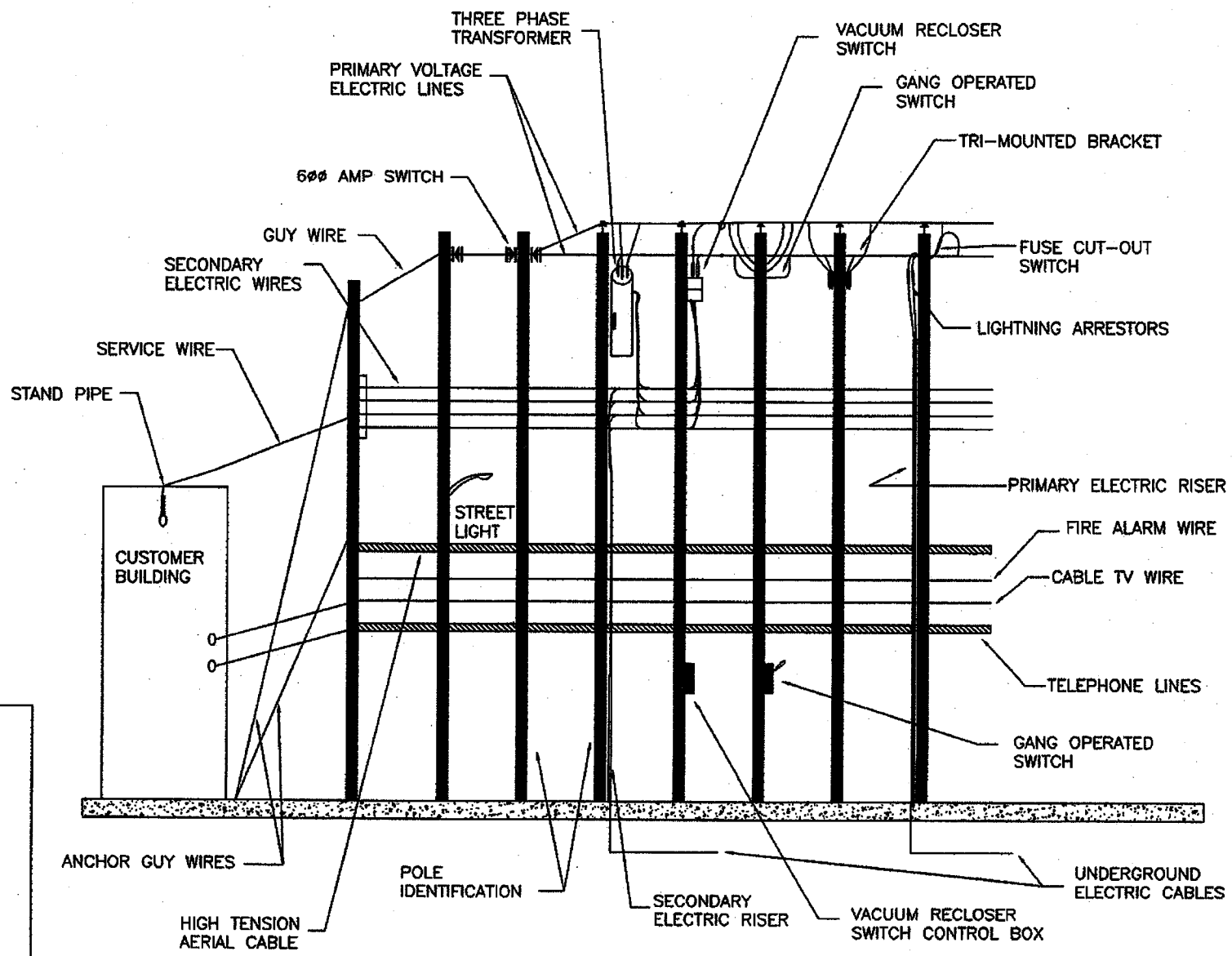

OVERHEAD WIRES & EQUIPMENT – TYPICAL PROFILE

N.T.S.

TYPICAL ARRANGEMENT OF OVERHEAD FACILITIES POLES & APPURTENANCES	
LAST REVISION 9/30/2015	SKETCH NO. JB 350 A

JB-7

ITEM JB 350 SHALL APPLY IF THE CITY CONTRACTOR PERFORMS AN INSTALLATION WITHIN 10 FEET OF UNPROTECTED ENERGIZED OVERHEAD CONDUCTORS OR WITHIN 3 FEET OF *PROTECTED ENERGIZED OVERHEAD CONDUCTORS, AERIAL CABLES AND SELF-SUPPORTING MULTIPLEX SERVICE DROP CONDUCTORS.

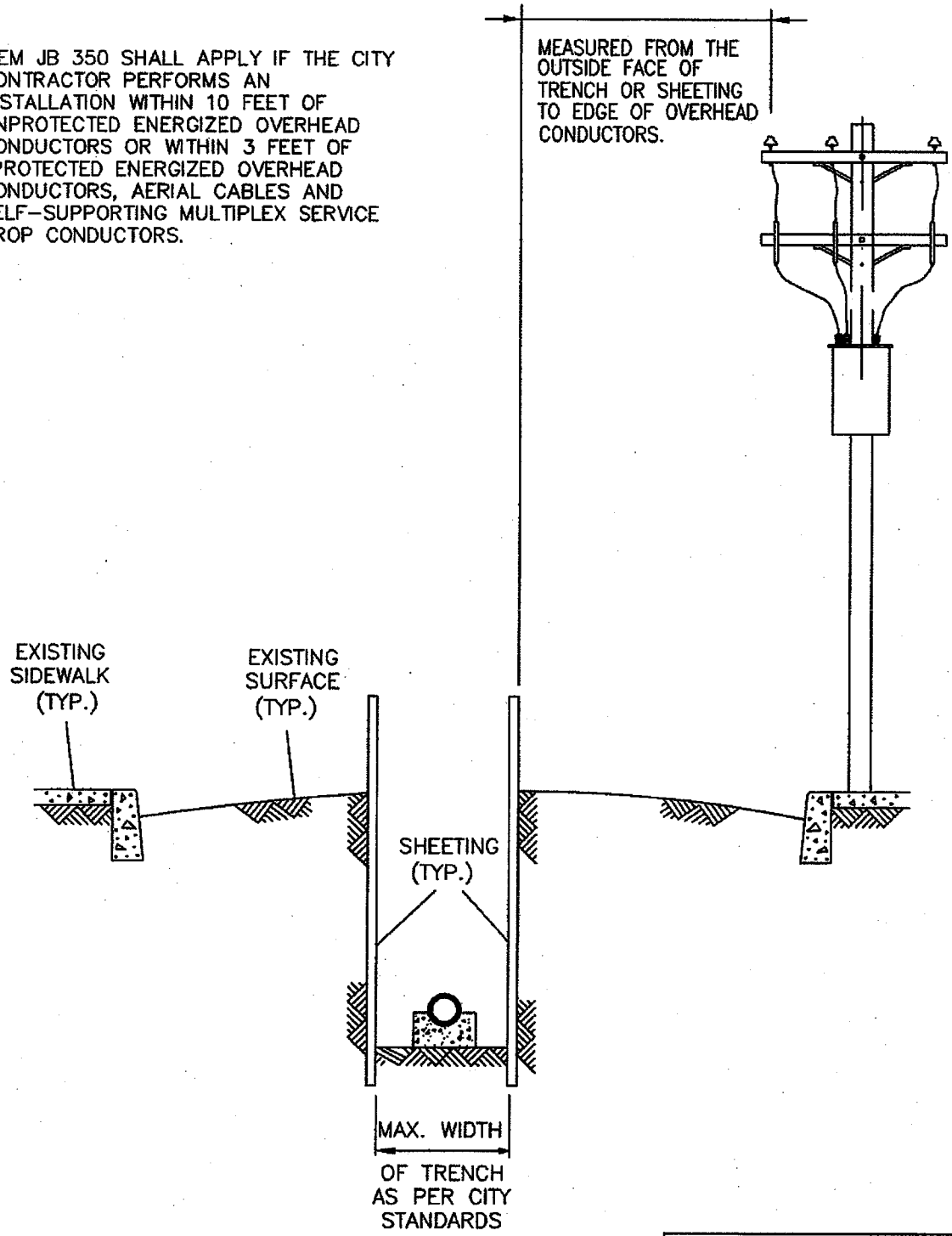

* CONDUCTOR PROTECTION SHALL BE BY APPROVED DEVICES SUCH AS LINE GUARDS, RUBBER HOSES OR BLANKETS OR ANY OTHER DEVICE APPROVED BY THE FACILITY OPERATOR(S) FOR THIS PURPOSE.

REQUIRED CLEARANCES TO ELECTRIC OVERHEAD FACILITIES, POLES & APPURTENANCES	
LAST REVISION 9/30/2015	SKETCH NO. JB 350 B

JB 351 - UTILITY POLE SUPPORTS

A. Description

This section describes the temporary supports for utility poles at locations directed by the facility operator(s), in order to maintain such poles in their existing upright position without disturbing attached wires and equipment. The Contractor shall provide all labor, material, equipment, insurance, and incidentals required to construct, install and maintain an effective support system that will meet the stated objective.

B. Materials

All materials required to construct and maintain an effective support system shall be supplied by the Contractor and approved by the facility operator.

C. Method of Construction

Where directed by the utility representative, the Contractor shall furnish, install and remove utility pole supports and maintain utility poles as shown on sketch JB 351. Alternate methods proposed by the Contractor will be permitted if approved by the facility operator.

D. Method of Measurement

The quantity of utility pole supports to be measured for payment shall be the number of utility poles supported. The Contractor will be paid only once for each utility pole supported and maintained no matter how many different construction operations have an impact on the pole.

E. Price to Cover

The price shall cover the cost of all labor, material, equipment, insurance, and incidentals necessary to furnish, install, maintain and remove utility pole supports to completely support, maintain, protect, and accommodate the integrity of utility poles without disruption of service to customers. The price bid shall also include all additional impact cost associated with working around utility pole supports, poles and appurtenances.

Separate payment will be made for the protection of overhead facilities under the Item JB 360.

F. References

1. Sketch JB 351
2. JB 350

METHODS OF SHORING UTILITY POLES

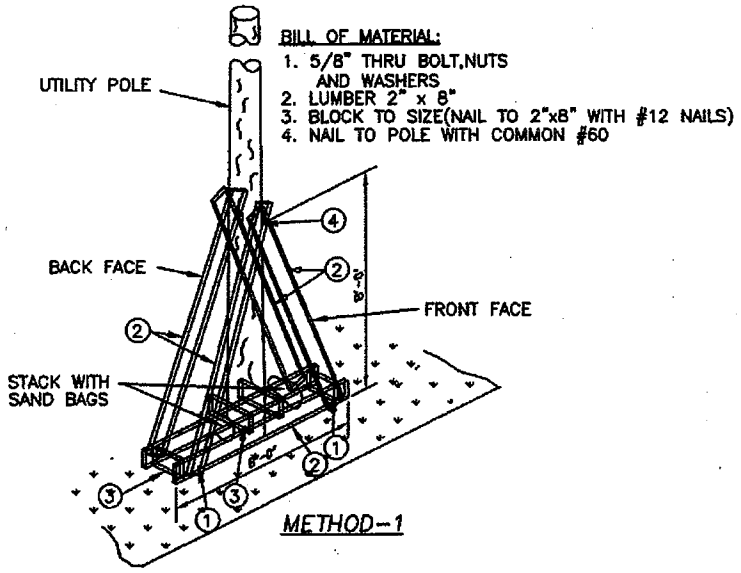

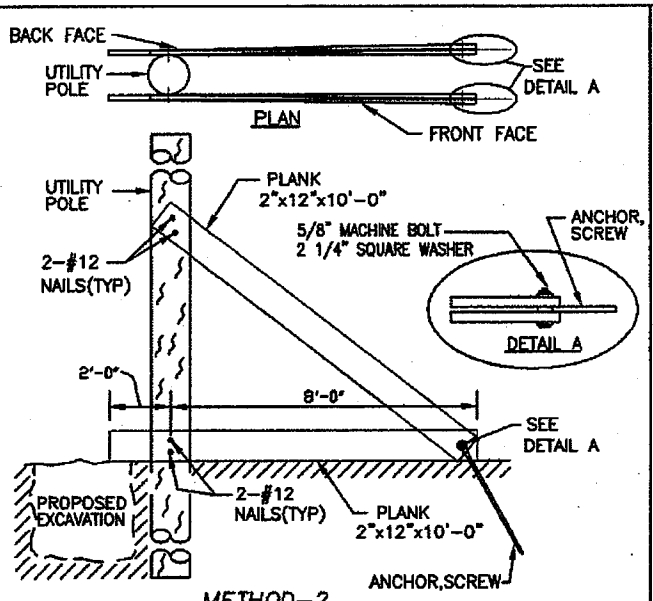

METHOD-2
(FRONT FACE SHOWN,BACK FACE OPPOSITE HAND)

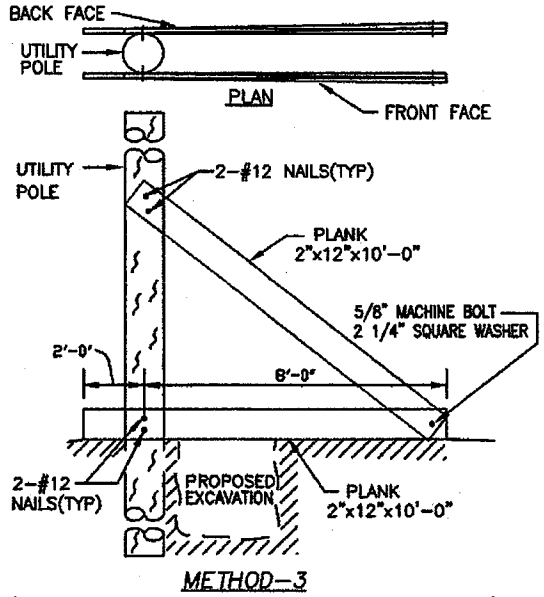

METHOD-3
(FRONT FACE SHOWN,BACK FACE OPPOSITE HAND)

NOTES:
1. THESE METHODS OF SHORING ARE GENERAL GUIDES. FIELD CONDITIONS WILL DICTATE WHICH METHOD WILL BE USED.VARIATIONS OF THESE METHODS WHICH ACCOMPLISH THE SAME PURPOSE MAY ALSO BE UTILIZED WHEN APPROVED BY OVERHEAD CONSTRUCTION DEPARTMENT.
2. ANY INFORMATION NOT SHOWN WILL BE DETERMINED IN THE FIELD TO SUIT THE FIELD CONDITIONS WHEN APPROVED BY THE OVERHEAD CONSTRUCTION DEPARTMENT.

METHODS OF SHORING UTILITY POLES	
LAST REVISION 9/30/2015	SKETCH NO. JB 351

JB 402T - HORIZONTAL AND VERTICAL ADJUSTMENT OF TELECOMMUNICATIONS FACILITIES

A. Description

Under this section, the Contractor shall provide all labor, materials, equipment, insurance and incidentals required to adjust and support and protect and maintain and accommodate the integrity of telecommunication facilities including but not limited to:

1. Conduit(s);
2. Cables and Air Pipe
3. Concrete Encased/Capped Conduit Banks

The work shall be performed in accordance with specifications and at the direction of the facility operator in consultation with the Resident Engineer.

B. Materials

All materials used to adjust and support and protect and maintain and accommodate the integrity of utility facilities shall be similar to those indicated on the standard Sketches JB 100 A & 100 A-1 and shall be supplied by the Contractor and be approved by the facility operator in consultation with the Resident Engineer .

Materials used for replacing conduit(s) removed under this item shall be supplied by and installed by the Contractor and shall include but not be limited to the following:

1. Bends
2. Split and Solid Conduit(s) PVC and Steel
3. Couplings and Adapters PVC, Tile and Steel
4. Straps or plastic ties

PVC conduit and fittings shall be as supplied by American Pipe and Plastics, Type "C" or approved equal.
Steel Pipe and fittings shall conform to ASTM A53 Schedule 40
Tile to PVC adaptors shall be as supplied American U-Tel or approved equal.

C. Methods of Construction

Lengths of "wing-back" shall be determined by the facility operator in consultation with the Resident Engineer. All work performed prior to that approval shall be at the contractors risk.

Methods of construction shall include but not be limited to the following:

1 Removal and Support

a. Break with hand held power tools, remove and dispose of plain or reinforced concrete encasement
b. Break with hand held power tools, remove and dispose of conduit(s) enclosures and conduit that contain conductor(s) and/or cable(s) except steel/Iron conduits, inner ducts and 1 ¼" to 1 ½" PVC "quad ducts. Breaking – "ringing and ripping" - of

steel/iron conduits belonging to ECS shall be performed by ECS forces only. Contractor shall make safe the work area to accommodate the ECS forces.

c. Support and protect exposed conduits, cables, innerduct and airpipe as shown in Sketch JB 100A-1 and approved by the facility operator in consultation with the Resident Engineer.

d. ECS tenants cables may require inspection, testing and encapsulation before they can be shifted. Contractor shall make safe the work area to accommodate these forces. Contractor shall be notified by the facility operator of the ECS tenant requirements before the conduits are broken-out.

2 Adjust or Move Conductor(s) and/or cable(s) and support

a. Cable shall be relocated horizontally and/or vertically as directed by the facility operator in consultation with the Resident Engineer

b. Support and protect conductors and/or cables as shown on Sketch # JB 100 A-1 and/or as directed by the facility operator.

3. Replacement, Encasement, Protection and Support

a. Place vacant and loaded conduit(s) with solid and/or split conduit(s) and adapters.

1) Vacant Conduit - Repairs to conduits shall not be permitted. All damaged or impaired lengths of conduit(s) shall be removed and replaced with new conduit(s). The number of vacant conduits replaced shall be confirmed by the facility operator.

2) Loaded Conduit - Replacement of conduits that are removed from around existing cable(s) or innerduct shall be accomplished with split plastic (PVC) or split steel conduits as directed by the facility operator. Where split and solid plastic or steel conduit is used, the conduit(s) shall be spaced 1½ inches from each other. All split PVC shall be secured with plastic straps spaced at a maximum distance of eighteen (18") inches. Plastic conduit shall be joined with plastic couplings.

3) Adapting - Joining plastic conduit to existing conduits of other diameters or material shall be done using single or multiple adapters, (supplied by contractor).

b. If due to subsurface conditions, the cover is less than 20" from finished grade, the duct shall be protected with steel plates furnished by the facility operator(s) and measured for payment under Item JB-403.

c. Support and protect cable(s) and/or conductor(s) and conduit(s).

d. Verify vacant conduits and provide pull ropes.

e. Encase all exposed conduit with concrete (f'c = 1200 to 1500 psi maximum) with slump commensurate to completely fill voids around conduits. Concrete encasement shall extend to two (2") inches beyond the limits of the duct bank vertically and horizontally.

D. Method of Measurement

The quantity to be measured for breaking out conduits, removing concrete, moving, protecting and supporting conductors and replacing conduits with split and solid conduit, shall be paid for by the linear foot (L.F.) of each conduit replaced. A linear foot of conduit shall be defined as one (1) single conduit measured along its longitudinal axis that has been broken out or moved from its original location either horizontally and/or vertically and measured in its final location. Quad PVC ducts produced as one unit shall be consider one duct for each quad unit. All conduits removed and not restored shall be covered for payment under the appropriate bid items for Removal of Abandoned Masonry for Utility Facilities and/or Removal of Abandoned Utility Conduits.

Multiple tile duct bank protection concrete cover is not considered concrete encasement.

Each type of utility adjustment shall be paid for separately, the types of utility adjustments are defined as follows:

JB-402T.1	Existing Concrete Encased Non-Steel/Iron Conduits Placed in Final Position without Concrete Encasement. (L.F.)
JB-402T.1A	Existing Concrete Encased Non-Steel/Iron Conduits Placed in Final Position with Concrete Encasement. (L.F.)
JB-402T.2	Existing Non-Concrete Encased Non-Steel/Iron Conduits Placed in Final Position without Concrete Encasement. (L.F.)
JB-402T.2A	Existing Non-Concrete Encased Non-Steel/Iron Conduits Placed in Final Position with Concrete Encasement. (L.F.)
JB-402T.R1A	Existing Concrete Encased Steel/Iron Conduits Placed in Final Position with Concrete Encasement. (L.F.)
JB-402T.R2A	Existing Non-Concrete Encased Steel/Iron Conduits Placed in Final Position with Concrete Encasement. (L.F.)
JB-402T.V1	Existing Vacant Concrete Encased Conduits Placed in Final Position without Concrete Encasement. (L.F.)
JB-402T.V1A	Existing Vacant Concrete Encased Conduits Placed in Final Position with Concrete Encasement. (L.F.)
JB-402T.V2	Existing Vacant Non-Concrete Encased Conduits Placed in Final Position without Concrete Encasement. (L.F.)
JB-402T.V2A	Existing Vacant Non-Concrete Encased Conduits Placed in Final Position with Concrete Encasement. (L.F.)
JB-402T.J1	Existing Concrete Encased Conduits Placed in Final Position without Concrete Encasement. (L.F.) in Which Only Conduit Joints are Broken Out and Conduits Remain Intact.

JB-402T.J1A Existing Concrete Encased Conduits Placed in Final Position with Concrete Encasement. (L.F.) in Which Only Conduit Joints are Broken Out and Conduits Remain Intact.

JB-402T.J2 Existing Non-Concrete Encased Conduits Placed in Final Position without Concrete Encasement. (L.F.) in Which Only Conduit Joints are Broken Out and Conduits Remain Intact.

JB-402T.J2A Existing Non-Concrete Encased Conduits Placed in Final Position with Concrete Encasement. (L.F.) in Which Only Conduit Joints are Broken Out and Conduits Remain Intact.

E. Price to Cover

The unit price bid per linear foot (L.F.) of conduit shall cover the cost of all labor, material, equipment, insurance, and incidentals necessary to shift, adjust, support, protect, maintain and accommodate the integrity of utilities without disruption of service to the facility operator's customers and in accordance with contract documents. The price bid shall also include the cost of: breaking out, removal and disposal of plain or reinforced concrete encasements, replacement with field split, split and solid conduits, adapters, clamps, straps and couplings ; verify vacant conduits and provide pull ropes; furnish and install concrete encasement, supports, slings and beams for utility support; changes of sheeting method and/or configuration when required and where necessary to accommodate the utilities during all phases of contract work;; and removal of sheeting around the utilities, and all else necessary and required to complete the work.
The unit price shall include providing access and assisting the facility operator specialized crews in shifting and supporting the conduits during pipe-ripping operations and all else necessary as required to complete the work including but not limited to temporary work platform and temporary weather protection. The unit price shall include providing access to the facility operator tenants to verify and test cables before, during and after the pipe ripping operation completed by the facility operator or specialized contractor hired by the facility operator and after conduit removal by the Contractor The unit price shall include, but not limited to, delays and stand-by time associated with the pipe-ripping operations, opening and closing of fences; removal and replacement of temporary timber curb and opening and closing of traffic plates. JB 450 shall not be used in conjunction with JB-402T.R1 & JB 402T.R1A, as these items cover access to the work site at all times.

F. References

1. Sketches JB 100A and 100A-1
2. JB 403
3. American Pipe and Plastics, P.O. Box 577, Binghamton, N.Y. 13902
4. American U-Tel, 9760 Smith Rd., Willoughby, Ohio 44094

JB 636M – MODIFICATION OF WORK METHODS TO ACCOMMODATE UTILITY HARDWAREDURING PAVEMENT MILLING AND RESURFACING OPERATIONS

A. Description

Under this section, the Contractor shall provide all labor, materials, equipment, insurance, and incidentals required to maintain, protect, and accommodate the integrity of utility hardware during pavement milling and resurfacing operations. Hardware includes castings, frames, and covers on utility structures, valve box cover castings, concrete collars around steam castings, and all other hardware protecting utility facilities.

B. Materials – N/A

C. Method of Construction

Removal of existing pavement around utility hardware shall be performed by the Contractor with extreme caution by utilizing appropriate methods of operation, by employing specialized construction equipment, and by special operations and sequencing.

The Contractor shall not mill existing pavement within 12" of the perimeter of utility hardware. Removal of pavement within 12" of the perimeter of utility hardware shall be by cutting with pavement breakers or other methods as proposed by the Contractor. All methods shall be presented to the facility operator by the Contractor prior to the start of construction and shall be approved by the facility operator.

During removal of existing pavement and for the duration of project, the Contractor shall protect utility hardware from damage by the Contractor's operations and traffic. Contractor shall also provide all necessary protection to pedestrians to prevent injury to pedestrians when crossing utility hardware during the project. Utility street hardware damaged by the Contractor or others during the project shall be replaced by the Contractor at Contractor's expense.

The Contractor shall not place any paving materials over utility hardware during the project and shall maintain free and unobstructed access to all structures at all times. The Contractor shall maintain all covers free of debris and protect the covers, if necessary, from residue that results from the paving operation.

D. Method of Measurement

The quantity to be measured for payment shall be the number of utility hardware units (EA.) in each size group actually adjusted as specified under each item. The size of each utility hardware unit, measured in width, shall be defined as either, the diameter of the exposed edge of the casting, the exposed edge of elliptical castings measured along the major axis or the exposed edge of the longest side of rectangular frames as indicated in sketch JB 636E.

JB 636 MA – Modification of Work Methods to Accommodate Utility Hardware (Under 7" Width)

JB 636 MB – Modification of Work Methods to Accommodate Utility Hardware (7" to under 14" Width)

JB 636 MC – Modification of Work Methods to Accommodate Utility Hardware (14" to under 30" Width)

JB 636 MD – Modification of Work Methods to Accommodate Utility Hardware (30" to under 34" Width)

JB 636 ME – Modification of Work Methods to Accommodate Utility Hardware (34" to under 41" Width)

JB 636 MG – Modification of Work Methods to Accommodate Utility Hardware (41" to under 75" Width)

JB 636 MH – Modification of Work Methods to Accommodate Utility Hardware (75" to under 125" Width)

JB 636 MI – Modification of Work Methods to Accommodate Utility Hardware (125" to under 170" Width)

JB 636 SMB – Modification of Work Methods to Accommodate Utility Steam Hardware (Under and including 8" Width)

JB 636 SMC – Modification of Work Methods to Accommodate Utility Steam Hardware (Above 8" to 34" Width)

A. Price to Cover

The price to modify work methods to accommodate Utility Hardware during pavement milling and resurfacing operations shall include the cost of all incremental labor, materials, time, equipment, insurance and incidentals required for removal and disposal of existing pavement, installation and compaction of base and wearing course materials, installation and compaction and removal of temporary asphalt concrete mixture, tack coating; in accordance with the plans, the specifications and the directions of the facility operator. The price to cover shall further include the cost of maintaining, protecting, and accommodating the integrity of utility street hardware during the project and during the performance of milling and resurfacing and the incremental additional work and effort made necessary to protect pedestrians from injury when crossing utility hardware during the project. The price to cover shall further include additional areas of modification of work methods beyond 12" of the perimeter of the utility street hardware due to the milling equipment and the location of other utility hardware, city street hardware, utility poles, street lights, traffic signals, curbs, sidewalks, medians, guide rails, pavement stops, cobblestones, and pavers. The price to cover for Items JB 636 SMB and JB 636 SMC shall also include modification of work methods due to existing concrete collars surrounding these castings.

Payment for all work herein specified shall be made on a one-time basis only; no payment for work herein specified shall be made for the same area more than one time. Adjustment to utility hardware shall be paid for under the appropriate JB 636E item.

F. References

1. Sketch JB 636E
2. JB Item 636E

JB 802 - SPECIAL MODIFICATION OF WORK FOR INSTALLATION OF NEW CURBS AND SIDEWALKS

A. Description

Under this Section, the Contractor shall be required to modify work methods of installing new curb and sidewalk in order to maintain, protect and accommodate the integrity of private Utility Facilities located within a zone of protection immediately beneath existing sidewalk and curb designated to be replaced under other Contract items. The zone of protection shall define an area of curb and sidewalk where: work is within the vicinity of private Utility Facilities as shown on the Special Care Excavation Plan or where utilities are encountered during construction that are within 18 inches of either face of curb and/or 12 inches of the base material of proposed curb and/or sidewalk.

B. Materials – N/A

C. Method of Operation/Construction

Once clearances have been verified by available records to the satisfaction of the facility operator, the Contractor shall exercise extreme caution to install new curb and sidewalks within zoned areas of protection. Exercising extreme caution shall mean utilizing appropriate methods of operation/construction, special operations and sequencing, and by employing hand labor, using hand held tools only, under the personal direction of the appropriate facility operator. The work shall incorporate, but not be limited by, the following restrictions:

1. Removal of Existing Curb and Sidewalk

Removal of existing curb and sidewalk material shall be performed by saw cutting the curb and sidewalk, for a depth of not less than 2", to assist the Contractor in breaking up the concrete curb and sidewalk for removal by hand. Curb and sidewalk removal shall be done with hand labor, using hand held tools only while working from adjacent undisturbed sidewalk and/or pavement. Furthermore, it shall be understood to mean that digging and/or excavating directly with power-mechanized earth moving equipment will not be permitted. Power mechanized earth moving equipment may only be used as a depository of material removed from the excavation by hand as described above. All equipment, methods, and maintenance and protection provisions shall require full authorization by the facility operator.

2. Preparation and Installation of New Curb and Temporary and New Sidewalk

Backfilling, filling, grading of sub base, and installation of new curb and both temporary and new sidewalk, as required under other Contract Items, shall be performed utilizing materials, equipment and methods of construction that will insure the integrity of the private utility facilities and at the same time meet all requirements for this work as specified in other sections of this contract.

3. Compaction

The Contractor shall compact all sub-grade and new sub-base materials by utilizing native and/or blended fill material, equipment and methods of construction that will ensure integrity of private Utility Facilities and at the same time meet all requirements for compaction as specified in Section 4.11 of the Standard Highway Specifications.

4. Powered Excavating Equipment Limitations

The Contractor shall not employ powered or mechanical excavating equipment within the zone of protection. Powered or mechanical excavating equipment may only be used as a depository for material removed from the excavation by hand as described above.

The Contractor shall not be permitted to store, stand and/or travel equipment/vehicles on specified unpaved zoned protection areas.

D. Method of Measurement

1. JB 802A

The quantity of "Special Care Excavation and Restoration for Sidewalk Work" to be measured for payment shall be the number of square feet (S.F.) of new sidewalk actually installed under other contract items within the zone of protection areas requested by the facility operator. For payment purposes, the horizontal limits for a zone of protection area shall be defined as the area designated on the plans or an area equal to the length of the designated facility multiplied by its width plus 18 inches on each side. Where overlapping of zones occur due to multiple facilities, the area will be modified to one zone measured from the outside limits. Where the 18-inch area falls beyond the curb line the outside boundary shall be the curb line.

2. JB 802B

The quantity of "Special Care Excavation and Restoration for Curb Work" to be measured for payment shall be equal to the number of linear feet (L.F.) of new curb actually installed under other contract items within the zone of protection areas requested by the facility operator.

E. Price to Cover

1. JB 802A

The contract price per square foot for "Special Care Excavation and Restoration for Sidewalk Work" shall be the incremental cost difference of all labor, materials, equipment, insurance and incidentals required for excavation and disposal of pavement, base and all other material to new sub-grade within and adjacent to zone of protection areas; saw cutting, grading, preparation of sub-grades, backfilling and compaction within zone of protection areas; all in accordance with the plans, the specifications and the directions of the facility operator. The price shall further include the cost of maintaining, protecting and accommodating the integrity of private Utility Facilities during the performance of sidewalk reconstruction (under other Contract Items) within zone of protection areas designated on the plans or as directed by the facility operator.

2. JB 802B

The contract price per linear foot for "Special Care Excavation and Restoration for Curb Work" shall be the incremental cost difference of all labor, materials, equipment, insurance and incidentals required to install new curbs and temporary restoration material under other Contract items, within and adjacent to zone of protection areas; all in accordance with the plans, the specifications and the directions of the facility operator. The price shall further include the cost of maintaining, protecting, and accommodating the integrity of private Utility Facilities during the performance of curb reconstruction (under other Contract Items) within zone of protection areas designated on the plans or as directed by the facility operator.

Payment for all work specified herein shall be made on a one-time basis only; no payment will be made for the same area of sidewalk or length of curb more than one time. When the installation of curb and sidewalk are performed as separate operations on the same location, payment shall be made separately for each operation. In addition, work under these items shall not be paid in combination with other utility items.

F. References

1. Section 4.11 Standard Highway Specification

LISTING OF COMPANIES NAMED FOR THIS CONTRACT

SEQ-200531
STORM SEWER EXTENSION
BOROUGH OF QUEENS

COMPANY NAME	CONTACT NAME	CONTACT TELEPHONE
CON EDISON	O'NEILL WRIGHT	212-460-3870
VERIZON	ROHAN ECCLES	718-977-8142
CHARTER	JOHN PIAZZA	718-888-4261

PRIVATE UTILITY
SCOPE OF WORK

(NO TEXT IN THIS SECTION)

JOINT BID WORKSHEET

ENGINEER'S ESTIMATE OF QUANTITY AND TYPES OF INTERFERENCE
FOR CONSOLIDATED EDISON COMPANY OF NEW YORK

SEQ200531

STORM SEWER EXTENSION
BOROUGH OF QUEENS

JOINT BID ITEM NUMBER	DESCRIPTION	UNITS	ESTIMATED QUANTITY
JB 100.1	UTILITIES CROSSING TRENCH FOR CATCH BASIN CHUTE CONNECT. AND/OR TESTPIT (TYPE .1)	EA	7
JB 100.2	UTILITIES CROSSING TRENCH FOR CATCH BASIN CHUTE CONNECT. AND/OR TESTPIT (TYPE .2)	EA	3
JB 101.1	UTILITIES CROSSING TRENCH FOR SEWERS UP TO AND INCL. 24" DIAMETER (TYPE .1)	EA	5
JB 101.2	UTILITIES CROSSING TRENCH FOR SEWERS UP TO AND INCL. 24" DIAMETER (TYPE .2)	EA	5
JB 104.1	UTILITIES CROSSING TRENCH FOR SEWERS OVER 48" TO 54" DIAMETER (TYPE .1)	EA	5
JB 104.2	UTILITIES CROSSING TRENCH FOR SEWERS OVER 48" TO 54" DIAMETER (TYPE .2)	EA	1
JB 105.1	UTILITIES CROSSING TRENCH FOR SEWERS OVER 54" TO 60" DIAMETER (TYPE .1)	EA	7
JB 105.2	UTILITIES CROSSING TRENCH FOR SEWERS OVER 54" TO 60" DIAMETER (TYPE .2)	EA	1
JB 108.1	UTILITIES CROSSING TRENCH FOR WATERMAIN UP TO AND INCL. 12" DIAMETER (TYPE .1)	EA	19
JB 108.2	UTILITIES CROSSING TRENCH FOR WATERMAIN UP TO AND INCL. 12" DIAMETER (TYPE .2)	EA	7
JB 200	EXTRA DEPTH EXCAVATION OF CATCH BASIN CHUTE CONNECTION PIPES	LF	51
JB 225	INSTALLATION AND REMOVAL OF CATCH BASINS WITH UTILITY INTERFERENCES	EA	8
JB 227	REMOVAL OF CATCH BASINS WITH UTILITY INTERFERENCES	EA	1
JB 300	SPECIAL CARE EXCAVATION AND BACKFILING	CY	134
JB 303	FURNISH, DELIVER AND INSTALL TYPE 3/8 CLEAN SAND BACKFILL	CY	83
JB 330E.2	SUPPORT & PROTECT ELEC, GAS & STEAM FACILITIES DURING EXCAVATION OF CITY TRENCH WHEN FACILITIES LIE W/IN TRENCH LIMITS (TYPE .2)	LF	8
JB 350	OVERHEAD ACCOMMODATION PROTECTION OF OVERHEAD	LS	1

JOINT BID WORKSHEET

ENGINEER'S ESTIMATE OF QUANTITY AND TYPES OF INTERFERENCE
FOR CONSOLIDATED EDISON COMPANY OF NEW YORK

SEQ200531

STORM SEWER EXTENSION
BOROUGH OF QUEENS

JOINT BID ITEM NUMBER	DESCRIPTION	UNITS	ESTIMATED QUANTITY
JB 351	UTILITY POLE SUPPORTS	EA	2
JB 400	TEST PITS FOR UTILITY FACILITIES	CY	50
JB 401	TRENCH EXCAVATION FOR ADJUSTMENT OF UTILITIES	CY	22
JB 402.2	EXISTING OCCUPIED NON-CONCRETE ENCASED CONDUITS PLACED IN FINAL POSITION W/O CONCRETE ENCASEMENT	LF	40
JB 450.1	CONSTRUCTION FIELD SUPPORT REQUIRING AVERAGE SIZE SURVEY CREW PERFORMING TYPICAL SURVEY FUNCTIONS (TYPE .1)	CRHRS	1
JB 450.2	CONSTRUCTION FIELD SUPPORT REQUIRING AVERAGE SMALL SIZE CREW CAPABLE OF PERFORMING VARIOUS TASKS (TYPE .2)	CRHRS	20
JB 450.3	CONSTRUCTION FIELD SUPPORT REQUIRING AVERAGE MEDIUM SIZE CREW CAPABLE OF PERFORMING VARIOUS TASKS (TYPE .3)	CRHRS	28
JB 500	REMOVAL OF ABANDONED UTILITY CONDUITS (NON-CONCRETE ENCASED)	LF	2,564
JB 501	REMOVAL OF ABANDONED MASONRY FOR ELEC. AND TEL. FACILITIES	CY	12
JB 636 ED	ADJUSTMENT OF UTILITY HARDWARE (30" TO UNDER 34" WIDTH)	EA	3
JB 636 MD	MODIFICATION OF WORK METHODS TO ACCOMMODATE UTILITY HARDWARE (30" TO UNDER 34" WIDTH)	EA	6
JB 700	SPECIAL MODIFICATION OF WORK METHODS TO ACCOMMODATE/PROTECT UNDERGROUND FACILITIES WITH LIMITED COVER	CY	127
JB 710.1	REMOVAL OF ABANDONED UTILITY STEEL/CAST IRON/PLASTIC, UP TO AND INCL. 12" DIAMETER PIPES	LF	138
JB 802A	SPECIAL CARE EXCAVATION AND RESTORATION FOR SIDEWALK WORK	SF	50
JB 802B	SPECIAL CARE EXCAVATION AND RESTORATION FOR CURB WORK	LF	10
JB 900	EXTRA UTILITY WORK COSTS ALLOWANCE	FS	1

JB 100.1 **UTILITIES CROSSING TRENCH FOR CATCH BASIN CHUTE CONNECT. AND/OR TESTPIT (TYPE .1)** **EA**

At the following locations:

W/S Cross Is. Pkwy. W. Serv. Rd., N/O 89th Ave.
N/S 88th Dr., W/O Cross Is. Pkwy. W. Serv. Rd.
W/S Cross Is. Pkwy. W. Serv. Rd., N/O 88th Dr.
N/S 88th Rd., W/O Cross Is. W. Serv. Rd.
N/S 87th Ave., W/O Cross Is. Pkwy. W. Serv. Rd.
N/S 87th Ave., E/O 241 St.
N/S 239th St., I/O 87th Ave.

Total Quantity for JB 100.1 = 7

JB 100.2 **UTILITIES CROSSING TRENCH FOR CATCH BASIN CHUTE CONNECT. AND/OR TESTPIT (TYPE .2)** **EA**

At the following locations:

W/S Cross Is. Pkwy. W. Serv. Rd., S/O 88th Ave.
W/S Cross Is. Pkwy. W. Serv. Rd., N/O 88th Ave.

Total Quantity for JB 100.2 = 3

JB 101.1 **UTILITIES CROSSING TRENCH FOR SEWERS UP TO AND INCL. 24" DIAMETER (TYPE .1)** **EA**

At the following locations:

W/S Cross Is. Pkwy. W. Serv. Rd., I/O 88th Dr.
S/S 239th St., W/O 87th Ave.
N/S 239th St., I/O 87th Ave.

Total Quantity for JB 101.1 = 5

JB 101.2 **UTILITIES CROSSING TRENCH FOR SEWERS UP TO AND INCL. 24" DIAMETER (TYPE .2)** **EA**

At the following locations:

W/S Cross Is. Pkwy. W. Serv. Rd., I/O 89th Ave.
W/S Cross Is. Pkwy. W. Serv. Rd., I/O 88th Rd.
W/S Cross Is. Pkwy. W. Serv. Rd., I/O 88th Ave.

Total Quantity for JB 101.2 = 5

JB 104.1 **UTILITIES CROSSING TRENCH FOR SEWERS OVER 48" TO 54" DIAMETER (TYPE .1)** **EA**

At the following locations:

W/S Cross Is. Pkwy. W. Serv. Rd., I/O 89th Ave.
E/S Cross Is. Pkwy. W. Serv. Rd., I/O 88th Dr.
E/S Cross Is. Pkwy. W. Serv. Rd., I/O 88th Rd.
E/S Cross Is. Pkwy. W. Serv. Rd., N/O 88th Rd.
E/S Cross Is. Pkwy. W. Serv. Rd., I/O 87th Ave.

Total Quantity for JB 104.1 = 5

JB 104.2 **UTILITIES CROSSING TRENCH FOR SEWERS OVER 48" TO 54" DIAMETER (TYPE .2)** **EA**

At the following locations:

E/S Cross Is. Pkwy. W. Serv. Rd., N/O 88th Ave.

Total Quantity for JB 104.2 = 1

JB 105.1 **UTILITIES CROSSING TRENCH FOR SEWERS OVER 54" TO 60" DIAMETER (TYPE .1)** **EA**

At the following locations:

F/O Hse. 241-32 87th Ave.
F/O Hse. 241-24 87th Ave.
F/O Hse. 241-10 87th Ave.
S/S 87th Ave., B/W 239th St. and 241 St.

Total Quantity for JB 105.1 = 7

JB 105.2 **UTILITIES CROSSING TRENCH FOR SEWERS OVER 54" TO 60" DIAMETER (TYPE .2)** **EA**

At the following locations:

I/O Cross Is. Pkwy. W. Serv. Rd. and 87th Ave.

Total Quantity for JB 105.2 = 1

JB 108.1 **UTILITIES CROSSING TRENCH FOR WATERMAIN UP TO AND INCL. 12" DIAMETER (TYPE .1)** **EA**

At the following locations:

W/S Cross Is. Pkwy. W. Serv. Rd., I/O 89th Ave.
W/S Cross Is. Pkwy. W. Serv. Rd., N/O 89th Ave.
W/S Cross Is. Pkwy. W. Serv. Rd., I/O 88th Dr.
W/S Cross Is. Pkwy. W. Serv. Rd., N/O 88th Dr.
W/S Cross Is. Pkwy. W. Serv. Rd., I/O 88th Rd.
W/S Cross Is. Pkwy. W. Serv. Rd., I/O 88th Rd.
W/S Cross Is. Pkwy. W. Serv. Rd., N/O 88th Rd.
W/S Cross Is. Pkwy. W. Serv. Rd., N/O 88th Rd.
W/S Cross Is. Pkwy. W. Serv. Rd., I/O 87th Ave.
S/S 87th Ave., B/W 239th St. and 241 St.
N/S 239th St., W/O 87th Ave.
N/S 239th St., I/O 87th Ave.
F/O Hse. 86-36 239th St.

Total Quantity for JB 108.1 = 19

JB 108.2 **UTILITIES CROSSING TRENCH FOR WATERMAIN UP TO AND INCL. 12" DIAMETER (TYPE .2)** **EA**

At the following locations:

West Sidewalk, Cross Is. Pkwy. W. Serv. Rd., S/O 89th Ave.
W/S Cross Is. Pkwy. W. Serv. Rd., I/O 89th Ave.
W/S Cross Is. Pkwy. W. Serv. Rd., I/O 88th Rd.
W/S Cross Is. Pkwy. W. Serv. Rd., I/O 88th Ave.
W/S Cross Is. Pkwy. W. Serv. Rd., N/O 88th Ave.
W/S Cross Is. Pkwy. W. Serv. Rd., N/O 88th Ave.

Total Quantity for JB 108.2 = 7

JB 200 **EXTRA DEPTH EXCAVATION OF CATCH BASIN CHUTE CONNECTION PIPES** **LF**

At the following locations:

W/S Cross Is. Pkwy. W. Serv. Rd., N/O 89th Ave.
W/S Cross Is. Pkwy. W. Serv. Rd., S/O 88th Ave.
W/S Cross Is. Pkwy. W. Serv. Rd., N/O 88th Ave.

Total Quantity for JB 200 = 51

JB 225 **INSTALLATION AND REMOVAL OF CATCH BASINS WITH UTILITY INTERFERENCES** **EA**

At the following locations:

W/S Cross Is. Pkwy. W. Serv. Rd., N/O 89th Ave.
N/S 88th Dr., W/O Cross Is. Pkwy. W. Serv. Rd.
W/S Cross Is. Pkwy. W. Serv. Rd., N/O 88th Dr.
N/S 88th Rd., W/O Cross Is. W. Serv. Rd.
W/S Cross Is. Pkwy. W. Serv. Rd., S/O 88th Ave.
W/S Cross Is. Pkwy. W. Serv. Rd., N/O 88th Ave.
N/S 87th Ave., W/O Cross Is. Pkwy. W. Serv. Rd.
N/S 87th Ave., E/O 241 St.

Total Quantity for JB 225 = 8

JB 227 **REMOVAL OF CATCH BASINS WITH UTILITY INTERFERENCES** **EA**

At the following locations:

N/S 87th Ave., E/O 241 St.

Total Quantity for JB 227 = 1

JB 300 **SPECIAL CARE EXCAVATION AND BACKFILING** **CY**

At the following locations:

W/S Cross Is. Pkwy. W. Serv. Rd., B/W 90th Ave. and 89th Ave.
W/S Cross Is. Pkwy. W. Serv. Rd., B/W 89th Ave. and 88th Dr.
W/S Cross Is. Pkwy. W. Serv. Rd., B/W 88th Dr. and 88th Rd.
S/S 88th Rd., W/O Cross Is. Pkwy. W. Serv. Rd.
W/S Cross Is. Pkwy. W. Serv. Rd., B/W 88th Rd. and 88th Ave.
S/S 87th Ave., B/W 239th St. and 241 St.
F/O Hse. 86-36 239th St.

Total Quantity for JB 300 = 134

JB 303 **FURNISH, DELIVER AND INSTALL TYPE 3/8 CLEAN SAND BACKFILL** **CY**

At the following locations:

I/O Cross Is. Pkwy. W. Serv. Rd. and 89th Ave.
I/O Cross Is. Pkwy. W. Serv. Rd. and 88th Ave.
I/O Cross Is. Pkwy. W. Serv. Rd. and 87th Ave.

Total Quantity for JB 303 = 83

JB 330E.2	**SUPPORT & PROTECT ELEC, GAS & STEAM FACILITIES DURING EXCAVATION OF CITY TRENCH WHEN FACILITIES LIE W/IN TRENCH LIMITS (TYPE .2)**	**LF**

At the following locations:

West Sidewalk, Cross Is. Pkwy. W. Serv. Rd., S/O 89th Ave.

Total Quantity for JB 330E.2 = 8

JB 350	**OVERHEAD ACCOMMODATION PROTECTION OF OVERHEAD**	**LS**

At the following locations:

Various

AS SHOWN ON CONTRACT DOCUMENTS

Total Quantity for JB 350 = 1

JB 351	**UTILITY POLE SUPPORTS**	**EA**

At the following locations:

Northeast Corner 241 St. and 87th Ave.
S/S 87th Ave., I/O 241 St.

Total Quantity for JB 351 = 2

JB 400	**TEST PITS FOR UTILITY FACILITIES**	**CY**

At the following locations:

As Required

Total Quantity for JB 400 = 50

JB 401	**TRENCH EXCAVATION FOR ADJUSTMENT OF UTILITIES**	**CY**

At the following locations:

N/S 88th Dr., W/O Cross Is. Pkwy. W. Serv. Rd.

AS ENCOUNTERED AND DIRECTED BY A CON EDISON REPRESENTATIVE

Total Quantity for JB 401 = 22

JB 402.2	**EXISTING OCCUPIED NON-CONCRETE ENCASED CONDUITS PLACED IN FINAL POSITION W/O CONCRETE ENCASEMENT**	**LF**

At the following locations:

N/S 88th Dr., W/O Cross Is. Pkwy. W. Serv. Rd.

AS ENCOUNTERED AND DIRECTED BY A CON EDISON REPRESENTATIVE

Total Quantity for JB 402.2 = 40

JB 450.1	**CONSTRUCTION FIELD SUPPORT REQUIRING AVERAGE SIZE SURVEY CREW PERFORMING TYPICAL SURVEY FUNCTIONS (TYPE .1)**	**CRHRS**

At the following locations:

As Required

Total Quantity for JB 450.1 = 1

JB 450.2	**CONSTRUCTION FIELD SUPPORT REQUIRING AVERAGE SMALL SIZE CREW CAPABLE OF PERFORMING VARIOUS TASKS (TYPE .2)**	**CRHRS**

At the following locations:

As Required

Total Quantity for JB 450.2 = 20

JB 450.3	**CONSTRUCTION FIELD SUPPORT REQUIRING AVERAGE MEDIUM SIZE CREW CAPABLE OF PERFORMING VARIOUS TASKS (TYPE .3)**	**CRHRS**

At the following locations:

As Required

Total Quantity for JB 450.3 = 28

JB 500 **REMOVAL OF ABANDONED UTILITY CONDUITS (NON-CONCRETE ENCASED)** **LF**

At the following locations:

S/S 89th Ave., W/O Cross Is. Pkwy. W. Serv. Rd.
N/S 88th Dr., W/O Cross Is. Pkwy. W. Serv. Rd.
S/S 88th Rd., W/O Cross Is. Pkwy. W. Serv. Rd.
W/S Cross Is. Pkwy. W. Serv. Rd., B/W 88th Rd. and 88th Ave.
W/S Cross Is. Pkwy. W. Serv. Rd., B/W 88th Ave. and 87th Ave.
S/S 87th Ave., B/W 241 St. and Cross Is. Pkwy. W. Serv. Rd.
S/S 87th Ave., B/W 239th St. and 241 St.

AS ENCOUNTERED AND DIRECTED BY A CON EDISON REPRESENTATIVE

Total Quantity for JB 500 = 2,564

JB 501 **REMOVAL OF ABANDONED MASONRY FOR ELEC. AND TEL. FACILITIES** **CY**

At the following locations:

S/S 87th Ave., Opposite Hse. 241-41
S/S 87th Ave., B/W 239th St. and 241 St.

AS ENCOUNTERED AND DIRECTED BY A CON EDISON REPRESENTATIVE

Total Quantity for JB 501 = 12

JB 636 ED **ADJUSTMENT OF UTILITY HARDWARE (30" TO UNDER 34" WIDTH)** **EA**

At the following locations:

Southwest Corner Cross Is. Pkwy. W. Serv. Rd. and 88th Ave.
W/S Cross Is. Pkwy. W. Serv. Rd., B/W 88th Ave. and 87th Ave.
Southwest Corner Cross Is. Pkwy. W. Serv. Rd. and 87th Ave.

AS ENCOUNTERED AND DIRECTED BY A CON EDISON REPRESENTATIVE

Total Quantity for JB 636 ED = 3

JB 636 MD	**MODIFICATION OF WORK METHODS TO ACCOMMODATE UTILITY HARDWARE (30" TO UNDER 34" WIDTH)**	**EA**

At the following locations:

Southwest Corner Cross Is. Pkwy. W. Serv. Rd. and 89th Ave.
W/S Cross Is. Pkwy. W. Serv. Rd., B/W 89th Ave. and 88th Dr.
Northwest Corner Cross Is. Pkwy. W. Serv. Rd. and 88th Dr.
W/S Cross Is. Pkwy. W. Serv. Rd., B/W 88th Dr. and 88th Rd.
Southwest Corner Cross Is. Pkwy. W. Serv. Rd. and 88th Rd.
W/S Cross Is. Pkwy. W. Serv. Rd., B/W 88th Rd. and 88th Ave.

AS ENCOUNTERED AND DIRECTED BY A CON EDISON REPRESENTATIVE

Total Quantity for JB 636 MD = 6

JB 700	**SPECIAL MODIFICATION OF WORK METHODS TO ACCOMMODATE/PROTECT UNDERGROUND FACILITIES WITH LIMITED COVER**	**CY**

At the following locations:

W/S Cross Is. Pkwy. W. Serv. Rd., N/O 88th Ave.

AS SHOWN ON CONTRACT DRAWINGS AND DIRECTED BY A CON EDISON REP.

Total Quantity for JB 700 = 127

JB 710.1	**REMOVAL OF ABANDONED UTILITY STEEL/CAST IRON/PLASTIC, UP TO AND INCL. 12" DIAMETER PIPES**	**LF**

At the following locations:

S/S 87th Ave., B/W 239th St. and 241 St.

Total Quantity for JB 710.1 = 138

JB 802A	**SPECIAL CARE EXCAVATION AND RESTORATION FOR SIDEWALK WORK**	**SF**

At the following locations:

As Required

AS ENCOUNTERED AND DIRECTED BY A CON EDISON REPRESENTATIVE

Total Quantity for JB 802A = 50

JB 802B	**SPECIAL CARE EXCAVATION AND RESTORATION FOR CURB WORK**	**LF**

At the following locations:

As Required

AS ENCOUNTERED AND DIRECTED BY A CON EDISON REPRESENTATIVE

Total Quantity for JB 802B = 10

JB 900	**EXTRA UTILITY WORK COSTS ALLOWANCE**	**FS**

At the following locations:

As Required

AS ENCOUNTERED AND DIRECTED BY A CON EDISON REPRESENTATIVE

Total Quantity for JB 900 = 1

JOINT BID WORKSHEET

SEQ-200531

INSTALLATION OF STORM SEWERS & DISTRIBUTION WATER MAINS IN CROSS ISLAND PARKWAY WEST SERVICE ROAD; ETC.

ENGINEER'S ESTIMATE OF QUANTITY AND TYPES OF INTERFERENCE

FOR VERIZON

IN THE BOROUGH OF QUEENS

JOINT BID ITEM NUMBER	DESCRIPTION	Unit of Measure	Estimated Quantity
JB 104.2	UTILITIES CROSSING TRENCH FOR SEWERS OVER 48" TO 54" DIAMETER (TYPE .2)	EA.	1.00
JB 109.2	UTILITIES CROSSING TRENCH FOR WATERMAIN OVER 12" AND UP TO 24" DIAMETER (TYPE .2)	EA.	1.00
JB 225	INSTALLATION AND REMOVAL OF CATCH BASINS WITH UTILITY INTERFERENCES	EA.	1.00
JB 400	TEST PITS FOR UTILITY FACILITIES	C.Y.	5.00
JB 401	TRENCH EXCAVATION FOR ADJUSTMENT OF UTILITY FACILITIES	C.Y.	22.00
JB 402T.2A	EXIST. OCCUPIED NON-CONCR. ENCASED CONDUITS PLCD. IN FINAL POS. WITH CONCR. ENCSMNT.	L.F.	34.00
JB 402T.V2A	EXIST. VACANT NON-CONCR. ENCASED CONDUITS PLCD. IN FINAL POS. WITH CONCR. ENCSMNT.	L.F.	170.00
JB 636	ADJUSTMENT OF UTILITY HARWARE (34" TO UNDER 41" WIDTH)	EA.	1.00
JB 802A	SPECIAL CARE EXCAVATION AND RESTORATION FOR SIDEWALK	S.F.	204.00
JB 802B	SPECIAL CARE EXCAVATION AND RESTORATION FOR CURB WORK	L.F.	5.00
JB 900	EXTRA UTILITY WORK ALLOWANCE	F.S.	1.00

VERIZON JB SCOPE OF WORK
SUPPORT & PROTECTION
SEQ-200531
INSTALLATION OF STORM SEWERS & DISTRIBUTION WATER MAINS IN CROSS ISLAND PARKWAY WEST SERVICE ROAD; ETC.
IN THE BOROUGH OF QUEENS

JB 104.2	**UTILITIES CROSSING TRENCH FOR SEWERS OVER 48" TO 54" DIAMETER (TYPE .2)**	**EA.**
	At the following locations:	
	NORTH SIDE OF THE INTERSECTION OF CROSS ISLAND PARKWAY WEST SERVICE ROAD AND 88TH AVENUE	1.00
	Total quantity for JB 104.2 = 1.00	
JB 109.2	**UTILITIES CROSSING TRENCH FOR WATERMAIN OVER 12" AND UP TO 24" DIAMETER (TYPE .2)**	**EA.**
	At the following locations:	
	NORTH SIDE OF THE INTERSECTION OF CROSS ISLAND PARKWAY WEST SERVICE ROAD AND 88TH AVENUE	1.00
	Total quantity for JB 109.2 = 1.00	
JB 225	**INSTALLATION AND REMOVAL OF CATCH BASINS WITH UTILITY INTERFERENCES**	**EA.**
	At the following locations:	
	AS ENCOUNTERED OR DIRECTED BY VERIZON FIELD REPRESENTATIVE	1.00
	Total quantity for JB 225 = 1.00	
JB 400	**TEST PITS FOR UTILITY FACILITIES**	**C.Y.**
	At the following locations:	
	AS ENCOUNTERED OR DIRECTED BY VERIZON FIELD REPRESENTATIVE	5.00
	Total quantity for JB 400 = 5.00	
JB 401	**TRENCH EXCAVATION FOR ADJUSTMENT OF UTILITY FACILITIES**	**C.Y.**
	At the following locations:	
	NORTH SIDE OF THE INTERSECTION OF CROSS ISLAND PARKWAY WEST SERVICE ROAD AND 88TH AVENUE	22.00
	Total quantity for JB 401 = 22.00	
JB 402T.2A	**EXIST. OCCUPIED NON-CONCR. ENCASED CONDUITS PLCD. IN FINAL POS. WITH CONCR. ENCSMNT.**	**L.F.**
	At the following locations:	
	NORTH SIDE OF THE INTERSECTION OF CROSS ISLAND PARKWAY WEST SERVICE ROAD AND 88TH AVENUE	34.00
	Total quantity for JB 402T.2A = 34.00	

VERIZON JB SCOPE OF WORK
SUPPORT & PROTECTION
SEQ-200531
INSTALLATION OF STORM SEWERS & DISTRIBUTION WATER MAINS IN CROSS ISLAND PARKWAY WEST SERVICE ROAD; ETC.
IN THE BOROUGH OF QUEENS

JB 402T.V2A	**EXIST. VACANT NON-CONCR. ENCASED CONDUITS PLCD. IN FINAL POS. WITH CONCR. ENCSMNT.**	**L.F.**
	At the following locations:	
	ALONG THE WEST SIDE OF THE SOUTH MEDIAN OF THE INTERSECTION OF 3RD AVENUE AND 36TH STREET	170.00
	Total quantity for JB 402T.V2A = 170.00	
JB 636	**ADJUSTMENT OF UTILITY HARWARE (34" TO UNDER 41" WIDTH)**	**EA.**
	At the following locations:	
	NORTH SIDE OF THE INTERSECTION OF CROSS ISLAND PARKWAY WEST SERVICE ROAD AND 88TH AVENUE	1.00
	Total quantity for JB 636 = 1.00	
JB 802A	**SPECIAL CARE EXCAVATION AND RESTORATION FOR SIDEWALK**	**S.F.**
	At the following locations:	
	ALONG THE WEST SIDE OF CROSS ISLAND PARKWAY WEST SERVICE ROAD	204.00
	Total quantity for JB 802A = 204.00	
JB 802B	**SPECIAL CARE EXCAVATION AND RESTORATION FOR CURB WORK**	**L.F.**
	At the following locations:	
	ALONG THE WEST SIDE OF CROSS ISLAND PARKWAY WEST SERVICE ROAD	5.00
	Total quantity for JB 802B = 5.00	
JB 900	**EXTRA UTILITY WORK ALLOWANCE**	**F.S.**
	At the following locations:	
	AS ENCOUNTERED OR DIRECTED BY VERIZON FIELD REPRESENTATIVE	1.00
	Total quantity for JB 900 = 1.00	

FOR INFORMATION ONLY
ENGINEER'S ESTIMATE OF QUANTITIES AND TYPES OF INTERFERENCE
Charter Spectrum
SEQ200531
Installation of Storm Sewers & Distribution Water Mains in Cross Island Parkway
West Service Road, etc.
Borough of Queens

JB ITEM	DESCRIPTION	UNITS	ESTIMATED QUANTITY
350TWC	OVERHEAD ACCOMMODATION, PROTECTION OF OVERHEAD FACILITIES, POLES & APPURTENANCES	LS	1
900	EXTRA UTILITY WORK COSTS ALLOWANCE	FS	1

Charter Spectrum
SUPPORT & PROTECTION
SEQ200531
Installation of Storm Sewers & Distribution Water Mains in Cross Island Parkway
West Service Road, etc.
Borough of Queens

JB 350TWC	**OVERHEAD ACCOMMODATION, PROTECTION OF OVERHEAD FACILITIES, POLES & APPURTENANCES** At the following locations: AS ENCOUNTERED		**LS** 1
		Total quantity for JB 350TWC	1
JB 900	**EXTRA UTILITY WORK COSTS ALLOWANCE**		**FS**
		Total quantity for JB 900	1

TEST PITS

(1) THESE TEST PITS DETAIL EXISTING CONDITIONS (AS OF BID DATE) OF UTILITIES AND OTHER SUBSURFACE FACILITIES AT LOCATIONS AS SHOWN ON THE TEST PIT LOCATIONS PLAN OF THE CONTRACT DRAWINGS.

(2) DEPTHS OF FACILITIES ARE FROM EXISTING ROADWAY AND SIDEWALK ELEVATIONS AS SHOWN, OFFSETS ARE FROM EXISTING CURB, PROPERTY AND BUILDING LINES, AS SHOWN.

(3) RELEVANT ITEMS ARE NOTED ON EACH TEST PIT DIAGRAM.

(NO TEXT IN THIS SECTION)

conEdison

JOB NO: SEQ200531 TEST PIT # 07

PREPARED BY: P. INES DATE: 05/24/17

CHECKED BY: P. TRUONG DATE: 05/24/17

JOB NAME: CONSTRUCTION OF SEWER AND WATER MAIN LOCATION: W/S CROSS IS. PKWY. W. SERV. RD. 20' S/O 88TH AVENUE

PURPOSE: FOR TYPE 3 CB REQUEST

DATE OF EXCAVATION: 05/1/17 CONTRACT SHEET NO: ____ OF ____

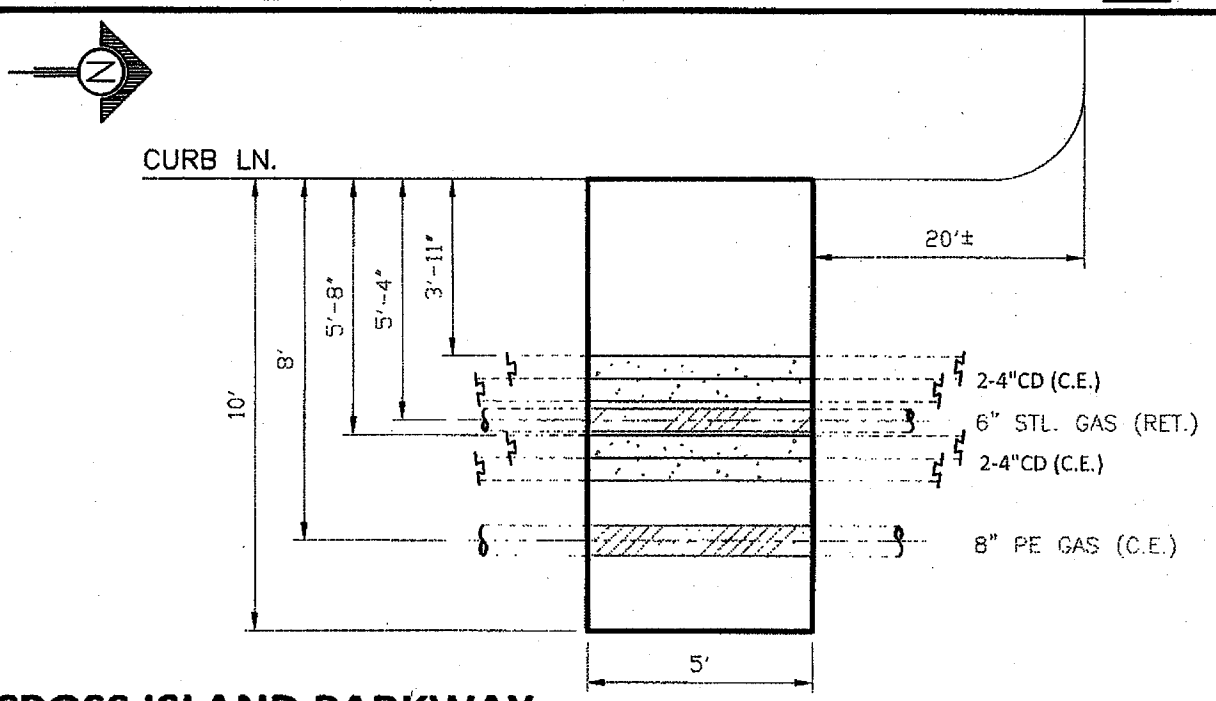

CROSS ISLAND PARKWAY WEST SERVICE ROAD

PLAN

N.T.S

CET

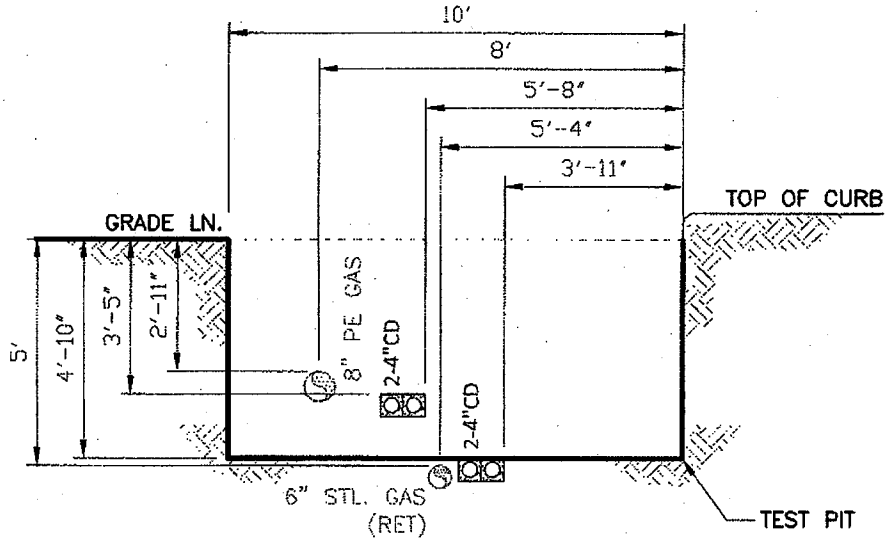

PROFILE – LOOKING SOUTH

N.T.S.

JB-39

conEdison

JOB NO: SEQ200531 TEST PIT # 08

PREPARED BY: P. INES DATE: 05/24/17

CHECKED BY: P. TRUONG DATE: 05/24/17

JOB NAME: CONSTRUCTION OF SEWER AND WATER MAIN LOCATION: W/S CROSS IS. PKWY. W. SERV. RD. 20' N/O 88TH AVENUE

PURPOSE: FOR TYPE 3 CB REQUEST

DATE OF EXCAVATION: 04/25/17 CONTRACT SHEET NO: ____ OF ____

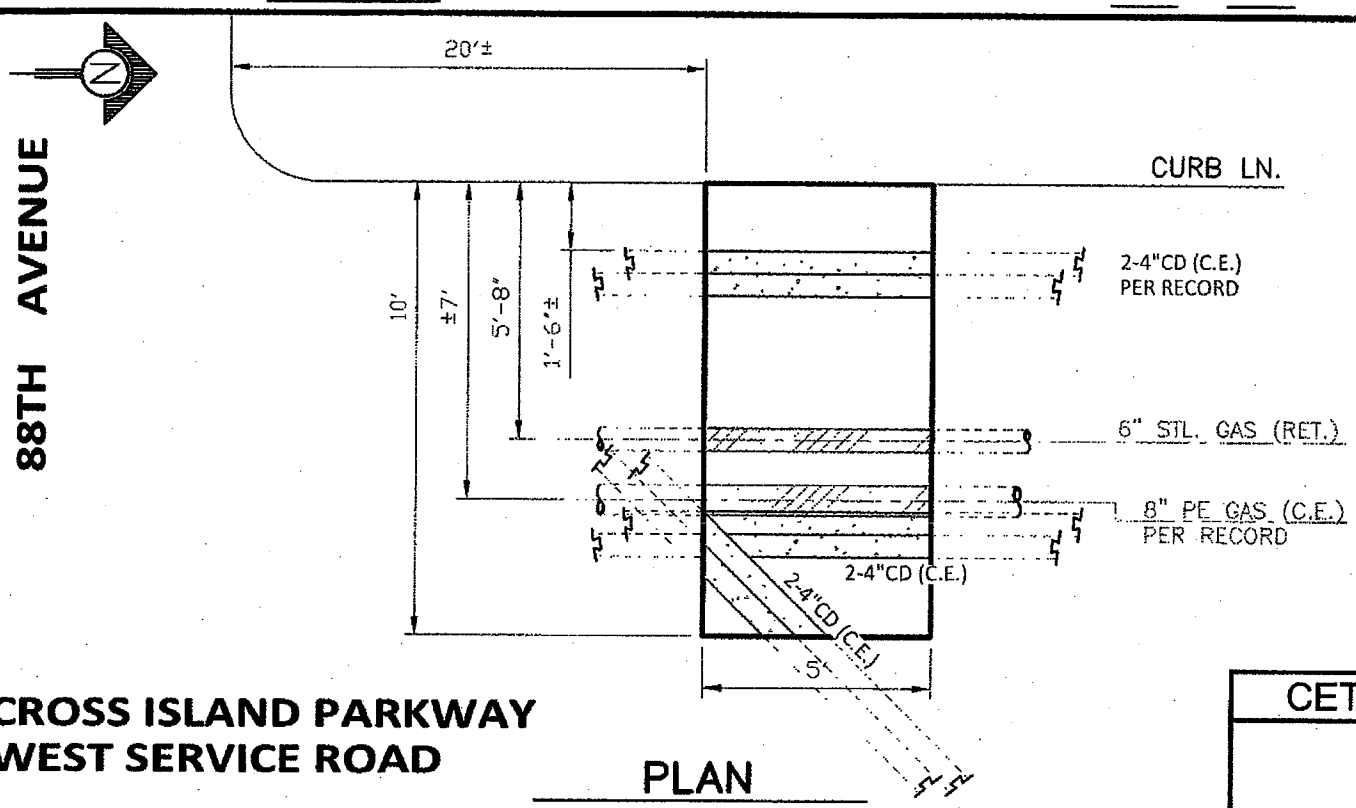

CROSS ISLAND PARKWAY
WEST SERVICE ROAD

PLAN

N.T.S

CET

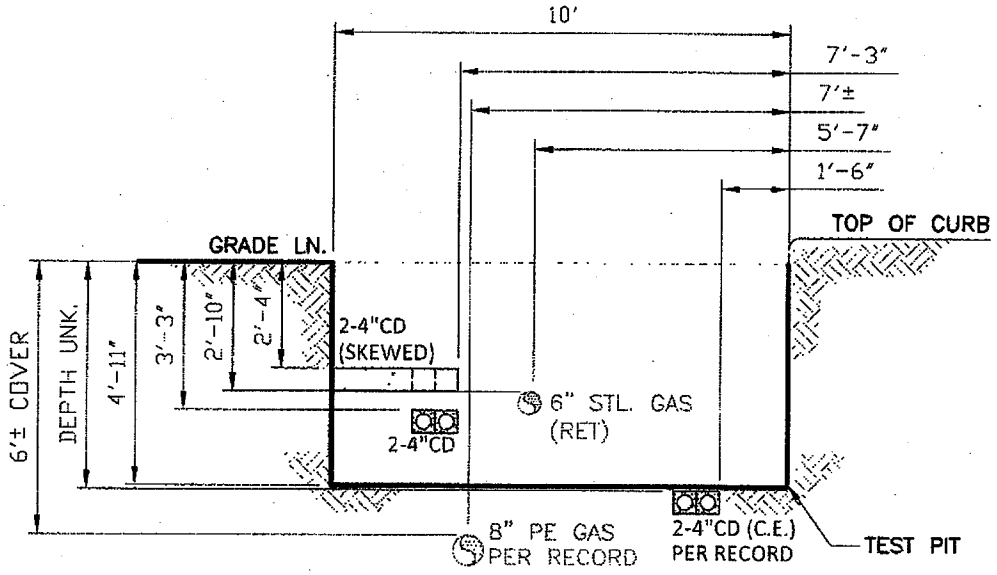

PROFILE – LOOKING SOUTH

N.T.S.

JB-40

verizon	JOB NO.: SEQ 200531	TEST PIT #: 1
	JOB: WATER MAIN WORK	TP DATE: 05/04/2017
	239TH STREET, BOROUGH OF QUEENS	INSPECTOR: W.I.

LOCATION: E/S. OF CROSS ISLAND PKWY SERVICE RD AND NE CORNER OF 88TH AVE

PURPOSE: LOCATE EXISTING UNDERGROUND TELEPHONE FACILITIES

DIMENSION: 6'-1"x4'-0"x3'-10" VOLUME: 3.45 C.Y. SHEET NO. 1 OF 1

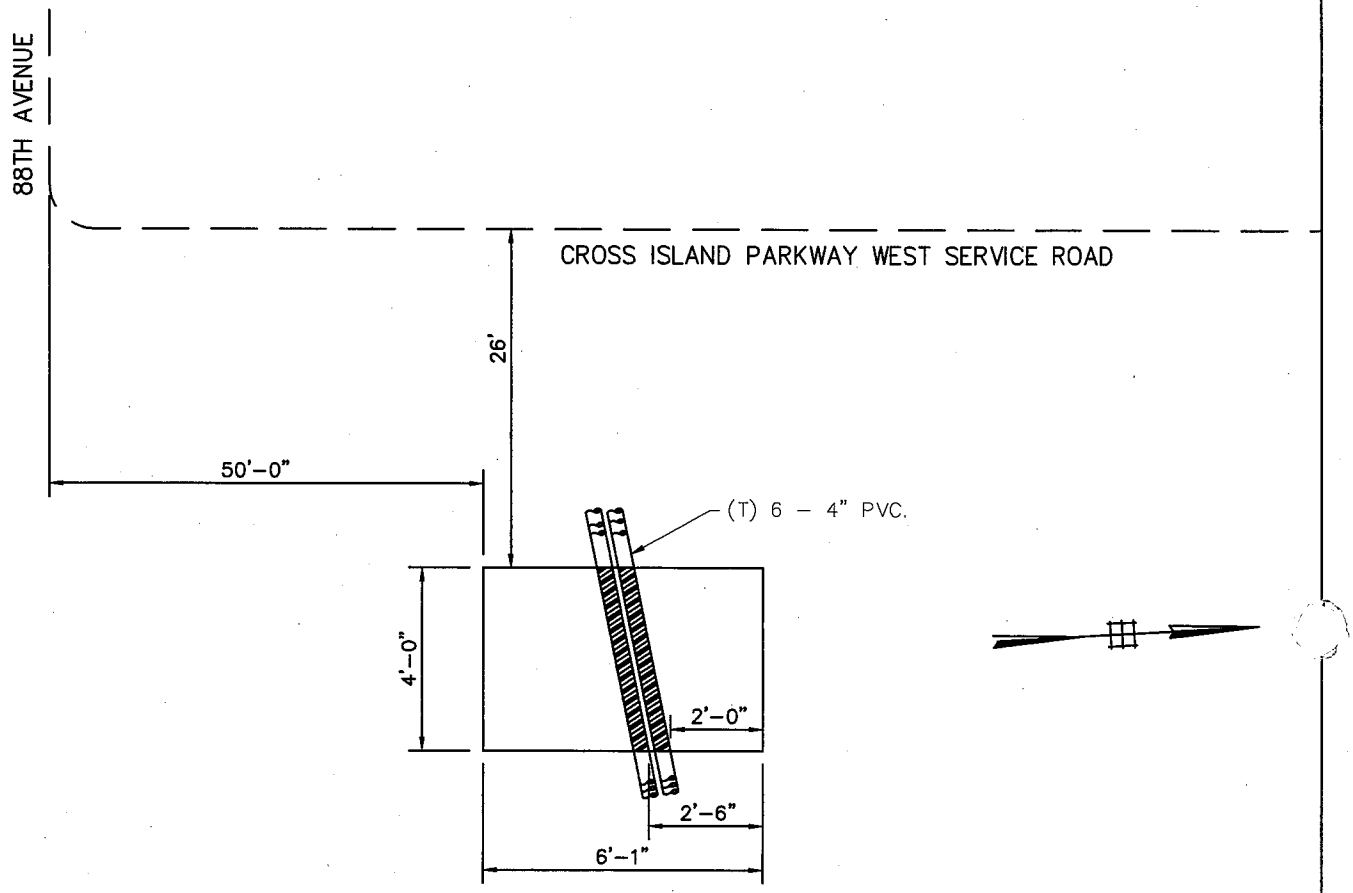

NOTE:
1. ALL DRAWINGS SHOWING UTILITY SUPPORT AND PROTECT WORK ARE FOR REFERENCE ONLY.

PLAN

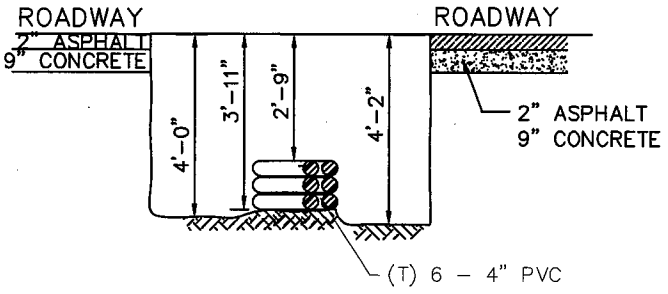

SECTION LOOKING WEST

JB-41

END OF JB-PAGES

THE JB-PAGES CONSIST OF FORTY-THREE (43) PAGES AND THIRTEEN (13) SHEETS OF PRIVATE UTILITY DRAWINGS ARE ATTACHED TO THE CONTRACT PLANS

NO TEXT ON THIS PAGE

Department of Design and Construction

INFRASTRUCTURE DIVISION
BUREAU OF DESIGN

VOLUME 3 OF 3

PROJECT ID: SEQ200531

FOR STORM SEWER EXTENSIONS

IN 239TH STREET BETWEEN 87TH AVENUE AND 88TH AVENUE
IN 87TH AVENUE BETWEEN CROSS ISLAND PARKWAY AND 239TH STREET
IN CROSS ISLAND PARKWAY WEST SERVICE ROAD BETWEEN 90TH AVENUE AND 87TH AVENUE

CAPITAL PROJECT WM-1

FOR WATER MAIN WORK

IN 239TH STREET BETWEEN 87TH AVENUE AND 88TH AVENUE
IN 87TH AVENUE BETWEEN CROSS ISLAND PARKWAY AND 239TH STREET
IN CROSS ISLAND PARKWAY WEST SERVICE ROAD BETWEEN 90TH AVENUE AND 87TH AVENUE

Together With All Work Incidental Thereto
BOROUGH OF QUEENS
CITY OF NEW YORK

_____
Contractor

_____

Dated_____, **20**___

_____