Department of Design and Construction

THE CITY OF NEW YORK
DEPARTMENT OF DESIGN AND CONSTRUCTION
DIVISION OF INFRASTRUCTURE

30-30 THOMSON AVENUE
LONG ISLAND CITY, NEW YORK 11101-3045
TELEPHONE (718) 391-1000
WEBSITE www1.nyc.gov/site/ddc/index.page

LAW

VOLUME 1 OF 3

BID BOOKLET

FOR FURNISHING ALL LABOR AND MATERIALS NECESSARY AND REQUIRED FOR:

PROJECT ID: SEK201BN7

RECONSTRUCTION OF COLLAPSED OR DEFECTIVE SANITARY, STORM OR COMBINED SEWERS VITRIFIED CLAY PIPE IN VARIOUS LOCATIONS IN BROOKLYN

Together With All Work Incidental Thereto
BOROUGH OF BROOKLYN
CITY OF NEW YORK

FOR THE DEPARTMENT OF ENVIRONMENTAL PROTECTION
PREPARED BY
IN-HOUSE DESIGN

AUGUST 3, 2017

18-007

*Revised on 11/15/2017

Bid Tab – REVISED*

Description	**RECONSTRUCTION OF COLLAPSED OR DEFECTIVE SANITARY, STORM OR COMBINED SEWERS VITRIFIED CLAY PIPE IN VARIOUS LOCATIONS, BROOKLYN**		
Bid Date	**10/03/2017**	**FMS ID**	**SEK201BN7**
Estimated Cost	**$6,563,550.00***	**Client Agency**	**DEP**
Bid Security	**Not less than 2% of Total Bid Price**	**PLA**	**NO**
Time Allowed	**545 CCD**	**Contract Manager**	**Nilofer Rajput**
Addendum	**0**	**Federal Funded:**	**NO**
PIN	**8502017SE0023C**	**Project Manager**	**Patel, Ashishkumar**
Selective Bidding	☐Yes ☒No	**E-PIN**	**85018B0005***

Bid Rank	Vendor	Bid Amount	Security Type
1	PERFETTO ENTERPRISES COMPANY, INC.	$7,200,000.00	Bond
2	ADC CONSTRUCTION LLC	$7,358,470.80	Bond
3	TRAC CONSTRUCTION GROUP, INC.	$7,634,420.00	Bond
4	JR CRUZ CORP	$9,601,249.40*	Bond
5	PAUL J. SCARIANO INC.	$10,083,683.37*	Bond
6	C.A.C. INDUSTRIES, INC.	$10,241,451.00	Bond
7	DIFAZIO IND., LLC D/B/A DIFAZIO INDUSTRIES	$11,310,290.97	Bond

Recorder: Brenda Barreiro Ext. 1041 **Approver:** Lorraine Holley

Department of Design and Construction

Ana Barrio
Acting Commissioner

Justin Walter
Chief Administrative Officer
Administration

Charlette Hamamgian, Esq.
Agency Chief
Contracting Officer

Lorraine Holley
Deputy ACCO
Competitive Sealed
Bid Contracts

November 28, 2017

CERTIFIED MAIL - RETURN RECEIPT REQUEST
PERFETTO ENTERPRISES COMPANY, INC.
2074 RICHMOND TERRACE
Staten Island, NY 10302

RE: FMS ID: SEK201BN7
E-PIN: 85018B0005001
DDC PIN: 8502017SE0023C
RECONSTRUCTION OF COLLAPSED OR DEFECTIVE SANITARY, STORM OR COMBINED SEWERS VITRIED CLAY PIPE IN VARIOUS LOCATIONS, BROOKLYN
NOTICE OF AWARD

Dear Contractor:

You are hereby awarded the above referenced contract based upon your bid in the amount of $7,200,000.00 submitted at the bid opening on October 03, 2017. Within ten (10) days of your receipt of this notice of award, you are required to take the actions set forth in Paragraphs (1) through (3) below. For your convenience, attached please find a copy of Schedule A of the General Conditions to the Contract, which sets forth the types and amounts of insurance coverage required for this contract.

(1) Execute two copies of the Agreement in the Contracts Unit, 30-30 Thomson Avenue, 1st Floor, Long Island City, New York (IDCNY Building). A Commissioner of Deeds will be available to witness and notarize your signature. The Agreement must be signed by an officer of the corporation or a partner of the firm.

(2) Submit to the Contracts Unit two properly executed performance and payment bonds. If required for this contract, copies of performance and payment bonds are attached.

(3) Submit to the Contracts Unit the following insurance documentation: (a) original certificate of insurance for general liability in the amount required by Schedule A, and (b) original certificates of insurance or other proof of coverage for workers' compensation and disability benefits, as required by New York State Law. The insurance documentation specified in this paragraph is required for registration of the contract with the Comptroller's Office.

Department of
Design and
Construction

On or before the contract commencement date, you are required to submit all other certificates of insurance and/or policies in the types and amounts required by Schedule A. Such certificates of Insurance and/or policies must be submitted to the Agency Chief Contracting Office, Attention: Risk Manager, Fourth Floor at the above indicated department address.

Your attention is directed to the section of the Information for Bidders entitled "Failure to Execute Contract". As indicated in this section, in the event you fail to execute the contract and furnish the required bonds within the (10) days of your receipt of this notice of award, your bid security will be retained by the City and you will be liable for the difference between your bid price and the price for which the contract is subsequently awarded, less the amount of the bid security retained.

Sincerely,

Michael Shipman
Director of Contracts

30 - 30 Thomson Ave L.I.C., NY 11101 Telephone: (000) 000-0000 Facsimile: (718) 391-1885 www.nyc.gov/buildnyc

Notices to Bidders

Pre-Bid Questions (PBQs)

Please be advised that PBQs should be submitted to the Agency Contact Person (CSB_projectinquiries@ddc.nyc.gov) at least five (5) business days (by 5:00 PM EST) prior to the bid opening date as indicated in ATTACHMENT 1 - BID INFORMATION, page A-1 and SCHEDULE B, page 13, VOLUME 1 OF 3 of this BID BOOKLET.

All PBQs must reference the Project ID. If a Bidder has multiple PBQs for the same Project ID, the PBQs must be numbered sequentially, even if they are submitted separately.

Apprenticeship Program

If Apprenticeship Program is required as noted on Page 19 of this BID BOOKLET, the following notice applies:

Please be advised that, pursuant to the authority granted to the City under Labor Law §816-b, the New York City Department of Design and Construction hereby requires that the contractor awarded a contract as a result of this solicitation, and any of its subcontractors with subcontracts worth two million dollars or over, have, prior to entering into such contract or subcontract, apprenticeship agreements appropriate for the type and scope of work to be performed that have been registered with, and approved by, the New York State Commissioner of Labor. In addition, the contractor and its subcontractors will be required to show that such apprenticeship program/s have successfully passed the two year Probation period following the initial registration date of such program/s with the New York State Department of Labor.

The failure to prove, upon request, that these requirements have been met shall result in the contract not being awarded to the contractor or the subcontractor not being approved.

Please be further advised that, pursuant to Labor Law §220, the allowable ratio of apprentices to journeypersons in any craft classification shall not be greater than the ratio permitted to the contractor as to its workforce on any job under the registered apprenticeship program.

Notices to Bidders

NYC Construction Loan Pilot Program

The New York City Department of Small Business Services (SBS), in conjunction with the New York Business Development Corporation (NYBDC), have established **a NYC Construction Loan** pilot program to provide prime contractors and subcontractors financing for mobilization costs on certain City construction projects.

Under this initiative, loans are available for early stage mobilization needs such as insurance, labor, supplies and equipment. Bidders are strongly encouraged to visit "Growing Your Business" at www.nyc.gov/nycbusiness to learn more about the loan or contact constructionloan@sbs.nyc.gov / (212) 513-6444 to obtain details and to determine preliminary eligibility.

A successful loan applicant will be required to make an assignment of its contract (or subcontract) payments to the lender NYBDC until the loan is repaid. If the loan is to a subcontractor, a prime contractor must honor the terms of such an assignment.

A prime contractor may not discriminate against a subcontractor or potential subcontractor by reason of the subcontractor's participation, or nonparticipation, in the NYC Construction loan program.

CITY OF NEW YORK

DEPARTMENT OF DESIGN AND CONSTRUCTION DIVISION OF INFRASTRUCTURE

BID BOOKLET

FOR FURNISHING ALL LABOR AND MATERIALS NECESSARY AND REQUIRED FOR:

PROJECT ID: SEK201BN7

RECONSTRUCTION OF COLLAPSED OR DEFECTIVE SANITARY, STORM OR COMBINED SEWERS VITRIFIED CLAY PIPE IN VARIOUS LOCATIONS IN BROOKLYN

Together With All Work Incidental Thereto
BOROUGH OF BROOKLYN

NO TEXT ON THIS PAGE

PROJECT ID: SEK201BN7

CITY OF NEW YORK
DEPARTMENT OF DESIGN AND CONSTRUCTION
DIVISION OF INFRASTRUCTURE

BID BOOKLET

TABLE OF CONTENTS

SECTION		PAGE
PART A		
1.	Table of Contents	1
2.	Special Notice to Bidders	2
3.	Attachment 1 – Bid Information	A-1
4.	Bid Schedule	B-1
5.	Bid Form	C-1
6.	Affirmation	C-6
7.	Bid Bond	C-7
8.	M/WBE Program: M/WBE Utilization Plan	5
9.	Apprenticeship Program Requirements	19
PART B		
10.	Safety Questionnaire	22
11.	Pre-award Process	25
12.	Project Reference Form	27
13.	Contract Certificate	30
14.	Vendex Compliance	31
15.	Iran Divestment Act Compliance Rider	32
16.	Construction Employment Report	34

(NO TEXT ON THIS PAGE)

CITY OF NEW YORK
DEPARTMENT OF DESIGN AND CONSTRUCTION
DIVISION OF INFRASTRUCTURE

SPECIAL NOTICE TO BIDDERS

BID SUBMISSION REQUIREMENTS

THE FOLLOWING DOCUMENTS ARE TO BE COMPLETED AND SUBMITTED WITH THE BID:

1. Bid Schedule and Bid Form, including Affirmation
2. Bid Security (if required, see Attachment 1 on Page A-1)
3. Schedule B: M/WBE Utilization Plan (if participation goals have been established)

FAILURE TO SUBMIT ITEMS (1), (2) AND (3)
WILL RESULT IN THE DISQUALIFICATION OF THE BID.

4. Safety Questionnaire
5. Construction Employment Report (if bid is $1,000,000 or more)
6. Contract Certificate (if bid is less than $1,000,000)
7. Confirmation of Vendex Compliance
8. Bidder's Certification of Compliance with Iran Divestment Act
9. Special Experience Requirements (if applicable)
10. Apprenticeship Program Questionnaire (if applicable)
11. Any addenda issued prior to the receipt of bids

FAILURE TO SUBMIT ITEMS (4) THROUGH (11)
MAY RESULT IN THE DISQUALIFICATION OF THE BID.

NOTES:

(1) All of the above referred to blank forms to be completed and submitted with the bid are included in the BID BOOKLET.

(2) If the bidder has any questions or requires additional information, please contact the Department of Design and Construction by phone (718-391- 2601) or by fax (718-391-2627).

(3) VENDEX QUESTIONNAIRES: The Bidder is advised that Vendex Questionnaires and procedures have been changed. Vendex Questionnaires, as well as detailed instructions, may be obtained at www.nyc.gov/vendex. The bidder may also obtain Vendex forms and instructions by contacting the Agency Chief Contracting Officer or the contact person for this contract.

(4) SPECIAL EXPERIENCE REQUIREMENTS: The Bidder is advised that Special Experience Requirements may apply to this contract. Such requirements are set forth on pages 3, 3a, 3b, and 4 of this Bid Booklet.

SPECIAL NOTICE TO BIDDERS

SPECIAL EXPERIENCE REQUIREMENTS (Revised 03/2014)

(A) **SPECIAL EXPERIENCE REQUIREMENTS FOR THE BIDDER:** The Special Experience Requirements set forth below apply to the bidder. Compliance with such Special Experience Requirements will be determined solely by the City prior to an award of contract. Failure to comply with the Special Experience Requirements will result in rejection of the bid as non-responsive.

The requirements in this Section (A) apply to this contract where indicated by a blackened box (■).

■ The bidder must, within the last seven (7) consecutive years prior to the bid opening, have successfully completed in a timely fashion at least one (1) project similar in scope and type to the required work. Such prior project may have been performed as a prime contractor, subcontractor or sub-subcontractor.

The Special Experience Requirements next to the blackened box below apply to the bidder. If the bidder intends to perform such work itself, it must demonstrate compliance with the Special Experience Requirements. If the bidder intends to subcontract this work, the proposed subcontractor or sub-subcontractor must demonstrate compliance with the Special Experience Requirements. The contractor, subcontractor or sub-subcontractor (hereinafter referred to as the "entity") that will perform any specific area of work indicated by the blackened box below, may have performed the required prior project(s) as a prime contractor, subcontractor or sub-subcontractor. Once approved, no substitution will be permitted, unless the qualifications of the proposed replacement have been approved in writing in advance by the City.

☐ **Trunk Water Main Work:** The entity that will perform the trunk water main work must, within the last seven (7) consecutive years prior to the bid opening, have successfully completed in a timely fashion at least one (1) project similar in scope and type to the required work.

☐ **Best Management Practice Work:** Best Management Practice ("BMP") Work is any item of work in the Bid Schedule that begins with the prefix "BMP". The entity that will perform any BMP Work must, within the last five (5) consecutive years prior to the bid opening, have successfully completed in a timely fashion at least three (3) projects similar in scope and type to the required work.

For professional services in connection with BMP Work, (i.e., monitoring and reporting services), the individual who will perform the required services must, within the last five (5) consecutive years prior to the bid opening, have successfully completed in a timely fashion at least three (3) projects similar in scope and type to the required work. Additional requirements are set forth below.

☐ The individual serving as the Restoration Specialist (Construction Monitor) must be a Registered Landscape Architect licensed by the state of New York, or must have equivalent professional experience.

☐ The individual serving as the Erosion and Sediment Control Licensed/Certified Professional must be a Certified Professional in Erosion and Sediment Control (CPESC), certified by CPESC, Inc.

☐ **Micro-Tunneling/Pipe Jacking Work:** The entity that will perform the micro-tunneling/pipe jacking work must, within the last five (5) consecutive years prior to the bid opening, have successfully completed in a timely fashion at least two (2) projects similar in scope and type to the required work.

☐ **OTHER:** _____

_____

(B) SPECIAL EXPERIENCE REQUIREMENTS FOR SPECIFIC AREAS OF WORK (to be provided after an award of contract):

The requirements in this Section (B) apply to this contract where indicated by a blackened box (■).

The Special Experience Requirements set forth below apply to the contractor, subcontractor or sub-subcontractor that will perform the specific area of work. **Compliance with such Special Experience Requirements will be determined solely by the City after an award of contract.** After an award of contract, when requested by the City, the contractor will be required to submit the qualifications of the contractor, subcontractor or sub-subcontractor that will perform the specific area of work. If the bidder intends to perform such work itself, it must demonstrate compliance with the Special Experience Requirements. If the bidder intends to subcontract this work, the proposed subcontractor or sub-subcontractor must demonstrate compliance with the Special Experience Requirements. Once approved, no substitution will be permitted, unless the qualifications of the proposed replacement have been approved in writing in advance by the City.

Special Experience Requirements apply to the contractor, subcontractor or sub-subcontractor (hereinafter referred to as the "entity") that will perform any specific area of work indicated by a blackened box. The entity may have performed the required prior project(s) as a prime contractor, subcontractor or sub-subcontractor.

☐ **Hazmat Work:** Hazmat Work is any item of work in the Bid Schedule that begins with the prefix 8.01. The entity that will perform any Hazmat Work must, within the last three (3) consecutive years prior to the bid opening, have successfully completed in a timely fashion at least five (5) projects similar in scope and type to the required work.

☐ **Pile, CFA Pile, and/or Mini-Pile Work:** The entity that will perform the Pile, CFA Pile and/or Mini-Pile Work must, within the last three (3) consecutive years prior to the bid opening, have successfully completed in a timely fashion at least two (2) projects similar in scope and type to the required work.

For professional services in connection with Pile Work, (i.e., engineering and inspection services), the individual who will perform the required services must be a Professional Engineer licensed by the state of New York. Such individual must also comply with the above requirements for prior projects.

☐ **Construction Report, Monitoring And Post-Construction Report, and Continuous Real-Time Monitoring For Vibrations And Movements And Post-Construction Report Work:** The entity that will perform the Construction Report, Monitoring For Vibrations And Movements, and Post-Construction Report Work must, within the last three (3) consecutive years prior to the bid opening, have successfully completed in a timely fashion at least two (2) projects similar in scope and type to the required work.

For professional services in connection with Reporting and Monitoring Work, (i.e., engineering and inspection services), the individual who will perform the required services must be a Professional Engineer licensed by the state of New York. Such individual must also comply with the above requirements for prior projects.

☐ **OTHER:** _____

_____

(C) **SPECIFICATIONS:** In the event of any conflict, omission or inconsistency between (1) the Specifications and/or Contract Drawings, and (2) the Special Experience Requirements in Section (B) of the Special Notice To Bidders, the special experience listed in the Specifications and/or Contract Drawings shall be controlling. The Special Experience Requirements in Section (B) of this Special Notice To Bidders are only for the convenience of the bidders.

(D) **SUBMISSION REQUIREMENTS:** For each project submitted to demonstrate compliance with the Special Experience Requirements, the bidder must complete and submit the Qualification Form included in the Bid Booklet. The City will only evaluate a project if the following criteria are met: (1) the project is described on the Qualification Form, and (2) all information on the Qualification Form is provided. The City will not evaluate any project which does not comply with the criteria set forth herein, including any project which is referred to only on the resume of an individual.

If Special Experience Requirements are indicated for any specific area of work, the submission requirement set forth above shall apply to the entity that will perform the specific area of work.

(E) **CONDITIONS**: In determining compliance with the Special Experience Requirements for the bidder set forth above, the City may consider prior projects completed by principal(s) or other employees of the bidder while affiliated with another entity, subject to the conditions set forth below.

- Any principal or other employee on whose prior experience the bidder is relying to demonstrate compliance with this special experience requirement must have held the following: (a) a significant management role in the prior entity with which he/she was affiliated, and (b) a significant management role in the entity submitting the bid for a period of six (6) months or more from the inception of the bidding entity.

- The bidder may not rely on the experience of its principals or other employees to demonstrate compliance with any other requirements, including without limitation, financial requirements or requirements for a specified minimum amount of annual gross revenues.

(F) **JOINT VENTURES**: In the event the bidder is a joint venture, at least one firm in the joint venture must meet the above described experience requirements.

Qualification Form

List previous projects completed to meet the special experience requirements for this contract. Please photocopy this form for submission of all required projects.

Name of Contractor: Perfetto Enterprises Company, Inc.

Name of Project: SEK201BN2

Location of Project: Various Locations, Brooklyn

Owner or Owner's representative (Architect or Engineer) who is familiar with the work performed:

Name: Fathi Husein

Title: EIC Phone Number: 718-595-4184

Brief description of the Project completed or the Project in progress:
Reconstruction of collapsed or otherwise defective sanitary, storm and combined vitrified clay pipe sewers, Brooklyn

Was the Project performed as a prime, a subcontractor or a sub-subcontractor: Prime

Amount of Contract, Subcontract or Sub-subcontract: 4,392,817.52

Start Date and Completion Date: 2012/2013

****

Name of Contractor: Perfetto Enterprises Company, Inc.

Name of Project: SEK201BS2

Location of Project: Various Locations, Brooklyn

Owner or Owner's representative (Architect or Engineer) who is familiar with the work performed:

Name: Fathi Husein

Title: Phone Number: 718-595-4184

Brief description of the Project completed or the Project in progress:
Reconstruction of collapsed or otherwise defective sanitary, storm and combined vitrified clay pipe sewers, Brooklyn

Was the Project performed as a prime, a subcontractor or a sub-subcontractor: Prime

Amount of Contract, Subcontract or Sub-subcontract: 4,609,126.73

Start Date and Completion Date: 2012/2013

ATTACHMENT 1 - BID INFORMATION

PROJECT ID: SEK201BN7
PIN: 8502017SE0023C

Description and Location of Work: RECONSTRUCTION OF COLLAPSED OR DEFECTIVE SANITARY, STORM OR COMBINED SEWERS VITRIFIED CLAY PIPE IN VARIOUS LOCATIONS IN BROOKLYN

Documents Available At:
30-30 Thomson Avenue
First Floor Bid Procurement Room
Long Island City, New York 11101
8:30 A.M. to 4:00 P.M. - Monday through Friday

Submission of Bids To:
30-30 Thomson Avenue
First Floor Bid Procurement Room
Long Island City, New York 11101
Before 11:00 A.M. on **OCTOBER 3, 2017**

Bid Opening:
30-30 Thomson Avenue
First Floor Bid Procurement Room
Long Island City, New York 11101

Time and Date: 11:00 A.M. on **OCTOBER 3, 2017**

Pre-Bid Conference: Yes _____ No X

If Yes, Mandatory: _____ Optional: _____
Time and Date: _____
Location: _____

Bid Security: Bid Security is required in the amount set forth below; provided, however, bid security is not required if the TOTAL BID PRICE set forth on the Bid Form is less than $1,000,000.00.

(1) Bond in an amount not less than 10% of the TOTAL BID PRICE set forth on the Bid Form, OR
(2) Certified Check in an amount not less than 2% of the TOTAL BID PRICE set forth on the Bid Form.

Performance and Payment Security: Required for contracts in the amount of $1,000,000 or more. Performance Security and Payment Security shall each be in an amount equal to 100% of the Contract Price.

Agency Contact Person:
Lorraine Holley
Phone: 718-391-2601 FAX: 718-391-2627
Email: CSB_projectinquiries@ddc.nyc.gov

(NO TEXT ON THIS PAGE)

LIST OF DRAWINGS

PROJECT ID: SEK201BN7
PIN: 8502017SE0023C

NO CONTRACT DRAWINGS

(NO TEXT ON THIS PAGE)

BID SCHEDULE

The following pages contain the Bid Schedule. Items listed in the Bid Schedule shall comply with the requirements of the corresponding sections of the specifications detailed in the table below. All references to the Standard Specifications, Details, Standards, and Drawings shall be to the version in effect at the time of bid.

NOTES:

- "XXX" in the table below signifies any possible combination of characters and spaces.
- The table below may contain item formats which are not included in the Bid Schedule.
- ***Please refer to the Bid Schedule to determine which specifications apply.***

Item Number Format	Applicable Specifications
4.XXX 6.XXX 7.XXX 8.XXX *(Except 8.01 XXX; see below)* 9.XXX	NYC Department of Transportation ("DOT") Standard Highway Specifications, as amended in the R-Pages, located in Volume 3 of 3 herein; ***AND*** NYC DOT Standard Details of Construction; ***OR,*** ***if the item is not contained within the Standard Specifications***, then see the applicable New Sections in the I-Pages, located in Volume 3 of 3 herein.
1.XXX 50.XXX through 55.XXX 60.XXX through 66.XXX 70.XXX through 79.XXX *(Except 79.11XXX; see below)* DSS XXX DSW XXX	NYC Department of Environmental Protection ("DEP") Standard Sewer and Water Main Specifications, as amended in the R-Pages and SW-Pages, located in Volume 3 of 3 herein; ***AND*** NYC DOT Specifications for Trunk Main Work; ***AND*** NYC DOT Sewer Design Standards; ***AND*** NYC DOT Water Main Standard Drawings; ***OR,*** ***if the item is not contained within the Standard Specifications,*** then see the Amendments to the Standard Sewer and Water Main Specifications in the SW-Pages, located in Volume 3 of 3 herein.
GI-XXX PM-XXX ROW XXX	New Sections in the I-Pages, located in Volume 3 of 3 herein ***AND*** NYC DEP Standards for Green Infrastructure.
UTL-XXX	Gas Cost Sharing Standard Specifications in the EP7-Pages, located in Volume 3 of 3 herein.

BID SCHEDULE

Item Number Format	Applicable Specifications
83X.XXX HW-XXX MX.XXX MP XXX NYC-XXX NYCT-XXX NYPD-XXX P XXX PK-XXX	New Sections in the I-Pages, located in Volume 3 of 3 herein.
BMP-XXX	Specifications for Construction of Best Management Practice (BMP) and Mitigation Area in the BMP-Pages, located in Volume 3 of 3 herein.
E XXX ME XXX	Specifications for the Specialty Electrical Works in the EL-Pages, located in Volume 3 of 3 herein.
SL-XXX	NYC DOT Division of Street Lighting Specifications ***AND*** NYC Division of Street Lighting Standard Drawings.
T-XXX	NYC DOT Specifications for Traffic Signals and Intelligent Transportation Systems ***AND*** NYC DOT Traffic Signal Standard Drawings.
JB XXX	Joint Bid Specifications in the JB-Pages, located in Volume 3 of 3 herein.
8.01 XXX	Specifications for Handling, Transportation and Disposal of Nonhazardous and Potentially Hazardous Contaminated Materials in the HAZ-Pages, located in Volume 3 of 3 herein.
67.XXX	Specifications for Abatement of Coal Tar Wrap Asbestos Containing Materials in the ASB-Pages, located in Volume 3 of 3 herein.
79.11XXX	Specifications for Abatement of Transit Authority Duct Insulation Asbestos Containing Materials in the ASB-Pages, located in Volume 3 of 3 herein.

(NO FURTHER TEXT ON THIS PAGE)

NEW YORK CITY DEPARTMENT OF DESIGN AND CONSTRUCTION
DIVISION OF INFRASTRUCTURE - BUREAU OF DESIGN

Contract PIN 8502017SE0023C
Project ID SEK201BN7

BID SCHEDULE

NOTE: (1) The Agency may reject a bid if it contains unbalanced bid prices. An unbalanced bid is considered to be one containing lump sum or unit items which do not reflect reasonable actual costs plus a reasonable proportionate share of the Bidder's anticipated profit, overhead costs, and other indirect costs, anticipated for the performance of the items in question.

(2) The following bid prices on Unit Price Contracts are to be paid for the actual quantities of the several classes of work in the completed work or structure, and they cover the cost of all work, labor, material, tools, plant and appliances of every description necessary to complete the entire work, as specified, and the removal of all debris, temporary work and appliances.

(3) PLEASE BE SURE A LEGIBLE BID IS ENTERED, IN INK, FOR EACH ITEM. Alterations must be initialed in ink by the bidder.

(4) The Extended Amount entered in Column 5 shall be the product of the Estimated Quantity in Column 2 times the Unit Price Bid in Column 4.

(5) Prospective bidders must examine the Bid Schedule carefully and, before bidding, must advise the Commissioner, in writing, if any pages are missing, and must request that such missing pages be furnished them. The pages of this Bid Schedule are numbered consecutively, as follows: B - 3 through B - 45

NEW YORK CITY DEPARTMENT OF DESIGN AND CONSTRUCTION
DIVISION OF INFRASTRUCTURE - BUREAU OF DESIGN

Contract PIN 8502017SE0023C
Project ID SEK201BN7

COL. 1 ITEM NUMBER (SEQUENCE NO.)	COL. 2 ENGINEER'S ESTIMATE OF QUANTITIES	COL. 3 CLASSIFICATIONS	COL. 4 UNIT PRICES (IN FIGURES) DOLLARS	CTS	COL. 5 EXTENDED AMOUNTS (IN FIGURES) DOLLARS	CTS
1.A08 (001)	100.0 L.F.	8" E.S.V.P. SEWER, ON CONCRETE CRADLE (MINIMUM 15 FEET LENGTHS) **Unit price bid shall not be less than: $ 325.00**	$ 660	.__	$ 66,000	.__
1.A48 (002)	50.0 L.F.	48" R.C.P. CLASS III SEWER, ON CONCRETE CRADLE (MINIMUM 15 FEET LENGTHS) **Unit price bid shall not be less than: $ 500.00**	$ 860	.__	$ 43,000	.__
1.B08 (003)	150.0 L.F.	8" E.S.V.P. SEWER, ON CONCRETE CRADLE (ADDITIONAL LENGTH BEYOND THE MINIMUM 15 FEET) (FIXED UNIT PRICE TO BE 70% OF UNIT PRICE BID FOR ITEM NO. 1.A08)	$ 462	.__	$ 69,300	.__
1.B48 (004)	100.0 L.F.	48" R.C.P. CLASS III SEWER, ON CONCRETE CRADLE (ADDITIONAL LENGTH BEYOND THE MINIMUM 15 FEET TO A MAXIMUM OF 100 FEET) (FIXED UNIT PRICE TO BE 72% OF UNIT PRICE BID FOR ITEM NO. 1.A48)	$ 475	20	$ 47,520	.__

NEW YORK CITY DEPARTMENT OF DESIGN AND CONSTRUCTION
DIVISION OF INFRASTRUCTURE - BUREAU OF DESIGN

Contract PIN 8502017SE0023C
Project ID SEK201BN7

COL. 1 ITEM NUMBER (SEQUENCE NO.)	COL. 2 ENGINEER'S ESTIMATE OF QUANTITIES	COL. 3 CLASSIFICATIONS	COL. 4 UNIT PRICES (IN FIGURES) DOLLARS	CTS	COL. 5 EXTENDED AMOUNTS (IN FIGURES) DOLLARS	CTS
1.C10 (005)	100.0 L.F.	10" E.S.V.P. SEWER, ON CONCRETE CRADLE (MINIMUM 15 FEET LENGTHS) **Unit price bid shall not be less than: $ 337.50**	$ 665	.—	$ 66,500	.—
1.C48 (006)	50.0 L.F.	48" R.C.P. CLASS III SEWER, ON CONCRETE CRADLE (ADDITIONAL LENGTH BEYOND 100 FEET) (FIXED UNIT PRICE TO BE 65% OF UNIT PRICE BID FOR ITEM NO. 1.A48)	$ 429	.—	$ 21,450	.—
1.D10 (007)	200.0 L.F.	10" E.S.V.P. SEWER, ON CONCRETE CRADLE (ADDITIONAL LENGTH BEYOND THE MINIMUM 15 FEET TO A MAXIMUM OF 100 FEET) (FIXED UNIT PRICE TO BE 70% OF UNIT PRICE BID FOR ITEM NO. 1.C10)	$ 465	.50	$ 93,100	.—

NEW YORK CITY DEPARTMENT OF DESIGN AND CONSTRUCTION
DIVISION OF INFRASTRUCTURE - BUREAU OF DESIGN

Contract PIN 8502017SE0023C
Project ID SEK201BN7

COL. 1 ITEM NUMBER (SEQUENCE NO.)	COL. 2 ENGINEER'S ESTIMATE OF QUANTITIES	COL. 3 CLASSIFICATIONS	COL. 4 UNIT PRICES (IN FIGURES) DOLLARS	CTS	COL. 5 EXTENDED AMOUNTS (IN FIGURES) DOLLARS	CTS
1.E10 (008)	400.0 L.F.	10" E.S.V.P. SEWER, ON CONCRETE CRADLE (ADDITIONAL LENGTH BEYOND 100 FEET) (FIXED UNIT PRICE TO BE 63% OF UNIT PRICE BID FOR ITEM NO. 1.C10)	$ 418	95	$ 167,580	
1.F12 (009)	250.0 L.F.	12" E.S.V.P. SEWER, ON CONCRETE CRADLE (MINIMUM 15 FEET LENGTHS) **Unit price bid shall not be less than: $ 350.00**	$ 925		$ 231,250	
1.G12 (010)	500.0 L.F.	12" E.S.V.P. SEWER, ON CONCRETE CRADLE (ADDITIONAL LENGTH BEYOND THE MINIMUM 15 FEET TO A MAXIMUM OF 100 FEET) (FIXED UNIT PRICE TO BE 70% OF UNIT PRICE BID FOR ITEM NO.1.F12)	$ 647	50	$ 323,750	

NEW YORK CITY DEPARTMENT OF DESIGN AND CONSTRUCTION
DIVISION OF INFRASTRUCTURE - BUREAU OF DESIGN

Contract PIN 8502017SE0023C
Project ID SEK201BN7

COL. 1 ITEM NUMBER (SEQUENCE NO.)	COL. 2 ENGINEER'S ESTIMATE OF QUANTITIES	COL. 3 CLASSIFICATIONS	COL. 4 UNIT PRICES (IN FIGURES) DOLLARS	CTS	COL. 5 EXTENDED AMOUNTS (IN FIGURES) DOLLARS	CTS
1.H12 (011)	1,240.0 L.F.	12" E.S.V.P. SEWER, ON CONCRETE CRADLE (ADDITIONAL LENGTH BEYOND 100 FEET) (FIXED UNIT PRICE TO BE 63% OF UNIT PRICE BID FOR ITEM NO. 1.F12)	$ 582	75	$ 722,610	
1.I15 (012)	250.0 L.F.	15" E.S.V.P. SEWER, ON CONCRETE CRADLE (MINIMUM 15 FEET LENGTHS) **Unit price bid shall not be less than: $ 375.00**	$ 950		$ 237,500	
1.J15 (013)	500.0 L.F.	15" E.S.V.P. SEWER, ON CONCRETE CRADLE (ADDITIONAL LENGTH BEYOND THE MINIMUM 15 FEET TO A MAXIMUM OF 100 FEET) (FIXED UNIT PRICE TO BE 70% OF UNIT PRICE BID FOR ITEM NO. 1.I15)	$ 665		$ 332,500	

NEW YORK CITY DEPARTMENT OF DESIGN AND CONSTRUCTION
DIVISION OF INFRASTRUCTURE - BUREAU OF DESIGN

Contract PIN 8502017SE0023C
Project ID SEK201BN7

COL. 1 ITEM NUMBER (SEQUENCE NO.)	COL. 2 ENGINEER'S ESTIMATE OF QUANTITIES	COL. 3 CLASSIFICATIONS	COL. 4 UNIT PRICES (IN FIGURES) DOLLARS	CTS	COL. 5 EXTENDED AMOUNTS (IN FIGURES) DOLLARS	CTS
1.K15 (014)	1,500.0 L.F.	15" E.S.V.P. SEWER, ON CONCRETE CRADLE (ADDITIONAL LENGTH BEYOND 100 FEET) (FIXED UNIT PRICE TO BE 63% OF UNIT PRICE BID FOR ITEM NO. 1.I15)	$ 598	50	$ 897,750	.—
1.L18 (015)	175.0 L.F.	18" E.S.V.P. SEWER, ON CONCRETE CRADLE (MINIMUM 15 FEET LENGTHS) **Unit price bid shall not be less than: $ 400.00**	$ 975	.—	$ 170,625	.—
1.M18 (016)	350.0 L.F.	18" E.S.V.P. SEWER, ON CONCRETE CRADLE (ADDITIONAL LENGTH BEYOND THE MINIMUM 15 FEET TO A MAXIMUM OF 100 FEET) (FIXED UNIT PRICE TO BE 70% OF UNIT PRICE BID FOR ITEM NO. 1.L18)	$ 682	50	$ 238,875	.—

NEW YORK CITY DEPARTMENT OF DESIGN AND CONSTRUCTION
DIVISION OF INFRASTRUCTURE - BUREAU OF DESIGN

Contract PIN 8502017SE0023C
Project ID SEK201BN7

COL. 1 ITEM NUMBER (SEQUENCE NO.)	COL. 2 ENGINEER'S ESTIMATE OF QUANTITIES	COL. 3 CLASSIFICATIONS	COL. 4 UNIT PRICES (IN FIGURES) DOLLARS	CTS	COL. 5 EXTENDED AMOUNTS (IN FIGURES) DOLLARS	CTS
1.N18 (017)	1,000.0 L.F.	18" E.S.V.P. SEWER, ON CONCRETE CRADLE (ADDITIONAL LENGTH BEYOND 100 FEET) (FIXED UNIT PRICE TO BE 63% OF UNIT PRICE BID FOR ITEM NO. 1.L18)	$ 614	25	$ 614,250	
1.O24 (018)	50.0 L.F.	24" R.C.P. CLASS III SEWER, ON CONCRETE CRADLE (MINIMUM 15 FEET LENGTHS) **Unit price bid shall not be less than: $ 412.50**	$ 695		$ 34,750	
1.P24 (019)	100.0 L.F.	24" R.C.P. CLASS III SEWER, ON CONCRETE CRADLE (ADDITIONAL LENGTH BEYOND THE MINIMUM 15 FEET TO A MAXIMUM OF 100 FEET) (FIXED UNIT PRICE TO BE 72% OF UNIT PRICE BID FOR ITEM NO. 1.O24)	$ 500	40	$ 50,040	

NEW YORK CITY DEPARTMENT OF DESIGN AND CONSTRUCTION
DIVISION OF INFRASTRUCTURE - BUREAU OF DESIGN

Contract PIN 8502017SE0023C
Project ID SEK201BN7

COL. 1 ITEM NUMBER (SEQUENCE NO.)	COL. 2 ENGINEER'S ESTIMATE OF QUANTITIES	COL. 3 CLASSIFICATIONS	COL. 4 UNIT PRICES (IN FIGURES) DOLLARS	CTS	COL. 5 EXTENDED AMOUNTS (IN FIGURES) DOLLARS	CTS
1.Q24 (020)	50.0 L.F.	24" R.C.P. CLASS III SEWER, ON CONCRETE CRADLE (ADDITIONAL LENGTH BEYOND 100 FEET) (FIXED UNIT PRICE TO BE 65% OF UNIT PRICE BID FOR ITEM NO. 1.Q24)	AP 451 ~~500~~	75 ~~40~~	AP 22,587 ~~50,040~~	50
1.R30 (021)	50.0 L.F.	30" R.C.P. CLASS III SEWER, ON CONCRETE CRADLE (MINIMUM 15 FEET LENGTHS) **Unit price bid shall not be less than: $ 425.00**	700		35,000	
1.S30 (022)	100.0 L.F.	30" R.C.P. CLASS III SEWER, ON CONCRETE CRADLE (ADDITIONAL LENGTH BEYOND THE MINIMUM 15 FEET TO A MAXIMUM OF 100 FEET) (FIXED UNIT PRICE TO BE 72% OF UNIT PRICE BID FOR ITEM NO. 1.R30)	504		50,400	

NEW YORK CITY DEPARTMENT OF DESIGN AND CONSTRUCTION
DIVISION OF INFRASTRUCTURE - BUREAU OF DESIGN

Contract PIN 8502017SE0023C
Project ID SEK201BN7

COL. 1 ITEM NUMBER (SEQUENCE NO.)	COL. 2 ENGINEER'S ESTIMATE OF QUANTITIES	COL. 3 CLASSIFICATIONS	COL. 4 UNIT PRICES (IN FIGURES) DOLLARS	CTS	COL. 5 EXTENDED AMOUNTS (IN FIGURES) DOLLARS	CTS
1.T30 (023)	50.0 L.F.	30" R.C.P. CLASS III SEWER, ON CONCRETE CRADLE (ADDITIONAL LENGTH BEYOND 100 FEET) (FIXED UNIT PRICE TO BE 65% OF UNIT PRICE BID FOR ITEM NO. 1.R30)	$ 455	.—	$ 22,750	.—
1.U36 (024)	50.0 L.F.	36" R.C.P. CLASS III SEWER, ON CONCRETE CRADLE (MINIMUM 15 FEET LENGTHS) **Unit price bid shall not be less than: $ 442.50**	$ 705	.—	$ 35,250	.—
1.V36 (025)	100.0 L.F.	36" R.C.P. CLASS III SEWER, ON CONCRETE CRADLE (ADDITIONAL LENGTH BEYOND THE MINIMUM 15 FEET TO A MAXIMUM OF 100 FEET) (FIXED UNIT PRICE TO BE 72% OF UNIT PRICE BID FOR ITEM NO. 1.U36)	$ 507	.60	$ 50,760	.—

NEW YORK CITY DEPARTMENT OF DESIGN AND CONSTRUCTION
DIVISION OF INFRASTRUCTURE - BUREAU OF DESIGN

Contract PIN 8502017SE0023C
Project ID SEK201BN7

COL. 1 ITEM NUMBER (SEQUENCE NO.)	COL. 2 ENGINEER'S ESTIMATE OF QUANTITIES	COL. 3 CLASSIFICATIONS	COL. 4 UNIT PRICES (IN FIGURES) DOLLARS	CTS	COL. 5 EXTENDED AMOUNTS (IN FIGURES) DOLLARS	CTS
1.W36 (026)	50.0 L.F.	36" R.C.P. CLASS III SEWER, ON CONCRETE CRADLE (ADDITIONAL LENGTH BEYOND 100 FEET) (FIXED UNIT PRICE TO BE 65% OF UNIT PRICE BID FOR ITEM NO. 1.U36)	$ 458	25	$ 22,912	50
1.X42 (027)	50.0 L.F.	42" R.C.P. CLASS III SEWER, ON CONCRETE CRADLE (MINIMUM 15 FEET LENGTHS) **Unit price bid shall not be less than: $ 475.00**	$ 755		$ 37,750	
1.Y42 (028)	100.0 L.F.	42" R.C.P. CLASS III SEWER, ON CONCRETE CRADLE (ADDITIONAL LENGTH BEYOND THE MINIMUM 15 FEET TO A MAXIMUM OF 100 FEET) (FIXED UNIT PRICE TO BE 72% OF UNIT PRICE BID FOR ITEM NO. 1.X42)	$ 543	60	$ 54,360	

NEW YORK CITY DEPARTMENT OF DESIGN AND CONSTRUCTION
DIVISION OF INFRASTRUCTURE - BUREAU OF DESIGN

Contract PIN 8502017SE0023C
Project ID SEK201BN7

COL. 1 ITEM NUMBER (SEQUENCE NO.)	COL. 2 ENGINEER'S ESTIMATE OF QUANTITIES	COL. 3 CLASSIFICATIONS	COL. 4 UNIT PRICES (IN FIGURES) DOLLARS	CTS	COL. 5 EXTENDED AMOUNTS (IN FIGURES) DOLLARS	CTS
1.Z42 (029)	50.0 L.F.	42" R.C.P. CLASS III SEWER, ON CONCRETE CRADLE (ADDITIONAL LENGTH BEYOND 100 FEET) (FIXED UNIT PRICE TO BE 65% OF UNIT PRICE BID FOR ITEM NO. 1.X42)	$ 490	75	$ 24,537	50
4.02 CA (030)	40.0 TONS	BINDER MIXTURE	$	01	$	40
4.02 CB (031)	2,000.0 TONS	ASPHALTIC CONCRETE MIXTURE **Unit price bid shall not be less than: $ 70.00**	$ 150		$ 300,000	
4.04 H (032)	35.0 C.Y.	CONCRETE BASE FOR PAVEMENT, VARIABLE THICKNESS FOR TRENCH RESTORATION, (HIGH-EARLY STRENGTH)	$	01	$	35

NEW YORK CITY DEPARTMENT OF DESIGN AND CONSTRUCTION
DIVISION OF INFRASTRUCTURE - BUREAU OF DESIGN

Contract PIN 8502017SE0023C
Project ID SEK201BN7

COL. 1 ITEM NUMBER (SEQUENCE NO.)	COL. 2 ENGINEER'S ESTIMATE OF QUANTITIES	COL. 3 CLASSIFICATIONS	COL. 4 UNIT PRICES (IN FIGURES) DOLLARS	CTS	COL. 5 EXTENDED AMOUNTS (IN FIGURES) DOLLARS	CTS
4.08 AA (033)	40.0 L.F.	CONCRETE CURB (18" DEEP)	$ 100	.—	$ 4,000	.—
4.09 AD (034)	40.0 L.F.	STRAIGHT STEEL FACED CONCRETE CURB (18" DEEP)	$ 100	.—	$ 4,000	.—
4.13 AAS (035)	220.0 S.F.	4" CONCRETE SIDEWALK (UNPIGMENTED)	$ 3	.75	$ 825	.—
4.13 BAS (036)	375.0 S.F.	7" CONCRETE SIDEWALK (UNPIGMENTED)	$ 5	.25	$ 1,968	.75

NEW YORK CITY DEPARTMENT OF DESIGN AND CONSTRUCTION
DIVISION OF INFRASTRUCTURE - BUREAU OF DESIGN

Contract PIN 8502017SE0023C
Project ID SEK201BN7

COL. 1 ITEM NUMBER (SEQUENCE NO.)	COL. 2 ENGINEER'S ESTIMATE OF QUANTITIES	COL. 3 CLASSIFICATIONS	COL. 4 UNIT PRICES (IN FIGURES) DOLLARS	CTS	COL. 5 EXTENDED AMOUNTS (IN FIGURES) DOLLARS	CTS
4.16 AA (037)	6.0 EACH	TREES REMOVED (4" TO UNDER 12" CALIPER)	$ 100	.—	$ 600	.—
4.16 AB (038)	3.0 EACH	TREES REMOVED (12" TO UNDER 18" CALIPER)	$ 115	.—	$ 345	.—
4.16 AC (039)	3.0 EACH	TREES REMOVED (18" TO UNDER 24" CALIPER)	$ 120	.—	$ 360	.—
4.16 AD (040)	2.0 EACH	TREES REMOVED (24" CALIPER AND OVER)	$ 150	.—	$ 300	.—

NEW YORK CITY DEPARTMENT OF DESIGN AND CONSTRUCTION
DIVISION OF INFRASTRUCTURE - BUREAU OF DESIGN

Contract PIN 8502017SE0023C
Project ID SEK201BN7

COL. 1 ITEM NUMBER (SEQUENCE NO.)	COL. 2 ENGINEER'S ESTIMATE OF QUANTITIES	COL. 3 CLASSIFICATIONS	COL. 4 UNIT PRICES (IN FIGURES) DOLLARS	CTS	COL. 5 EXTENDED AMOUNTS (IN FIGURES) DOLLARS	CTS
4.16 CA405 (041)	2.0 EACH	TREES PLANTED, 3" TO 3-1/2" CALIPER, ALL TYPES, IN 4' X 5' TREE PITS	$ 300	.__	$ 600	.__
4.18 A (042)	6.0 EACH	MAINTENANCE TREE PRUNING (UNDER 12" CAL.)	$ 100	.__	$ 600	.__
4.18 B (043)	4.0 EACH	MAINTENANCE TREE PRUNING (12" TO UNDER 18" CAL.)	$ 125	.__	$ 500	.__
4.18 C (044)	2.0 EACH	MAINTENANCE TREE PRUNING (18" TO UNDER 24" CAL.)	$ 150	.__	$ 300	.__

NEW YORK CITY DEPARTMENT OF DESIGN AND CONSTRUCTION
DIVISION OF INFRASTRUCTURE - BUREAU OF DESIGN

Contract PIN 8502017SE0023C
Project ID SEK201BN7

COL. 1 ITEM NUMBER (SEQUENCE NO.)	COL. 2 ENGINEER'S ESTIMATE OF QUANTITIES	COL. 3 CLASSIFICATIONS	COL. 4 UNIT PRICES (IN FIGURES) DOLLARS	CTS	COL. 5 EXTENDED AMOUNTS (IN FIGURES) DOLLARS	CTS
4.18 D (045)	2.0 EACH	MAINTENANCE TREE PRUNING (24" CAL. AND OVER)	$ 175	.—	$ 350	.—
51.21S0A1000V (046)	70.0 EACH	STANDARD MANHOLE TYPE A-1	$ 4,500	.—	$ 315,000	.—
51.21S0A2000V (047)	1.0 EACH	STANDARD MANHOLE TYPE A-2	$ 2,000	.—	$ 2,000	.—
51.21S0B1000V (048)	1.0 EACH	STANDARD MANHOLE TYPE B-1	$ 2,000	.—	$ 2,000	.—

NEW YORK CITY DEPARTMENT OF DESIGN AND CONSTRUCTION
DIVISION OF INFRASTRUCTURE - BUREAU OF DESIGN

Contract PIN 8502017SE0023C
Project ID SEK201BN7

COL. 1 ITEM NUMBER (SEQUENCE NO.)	COL. 2 ENGINEER'S ESTIMATE OF QUANTITIES	COL. 3 CLASSIFICATIONS	COL. 4 UNIT PRICES (IN FIGURES) DOLLARS	CTS	COL. 5 EXTENDED AMOUNTS (IN FIGURES) DOLLARS	CTS
51.21S0B2000V (049)	1.0 EACH	STANDARD MANHOLE TYPE B-2	$ 2,000	.__	$ 2,000	.__
51.21S0C1000E (050)	1.0 EACH	STANDARD MANHOLE TYPE C-1 ON EXISTING SEWER	$ 2,000	.__	$ 2,000	.__
51.21S0C2000E (051)	1.0 EACH	STANDARD MANHOLE TYPE C-2 ON EXISTING SEWER	$ 2,000	.__	$ 2,000	.__
51.23RF (052)	1.0 EACH	REPLACEMENT OF EXISTING MANHOLE FRAME AND COVER	$ 2,000	.__	$ 2,000	.__

NEW YORK CITY DEPARTMENT OF DESIGN AND CONSTRUCTION
DIVISION OF INFRASTRUCTURE - BUREAU OF DESIGN

Contract PIN 8502017SE0023C
Project ID SEK201BN7

COL. 1 ITEM NUMBER (SEQUENCE NO.)	COL. 2 ENGINEER'S ESTIMATE OF QUANTITIES	COL. 3 CLASSIFICATIONS	COL. 4 UNIT PRICES (IN FIGURES) DOLLARS	CTS	COL. 5 EXTENDED AMOUNTS (IN FIGURES) DOLLARS	CTS
51.31S00100E (053)	1.0 EACH	STANDARD DROP-PIPE MANHOLE TYPE I ON EXISTING SEWER	$ 2,000	.—	$ 2,000	.—
51.41S001 (054)	15.0 EACH	STANDARD CATCH BASIN, TYPE 1	$ 2,500	.—	$ 37,500	.—
51.71M00000 (055)	1.0 EACH	MODIFICATION OF EXISTING MANHOLE	$ 5,000	.—	$ 5,000	.—
52.11D12 (056)	375.0 L.F.	12" DUCTILE IRON PIPE BASIN CONNECTION	$ 140	.—	$ 52,500	.—

NEW YORK CITY DEPARTMENT OF DESIGN AND CONSTRUCTION
DIVISION OF INFRASTRUCTURE - BUREAU OF DESIGN

Contract PIN 8502017SE0023C
Project ID SEK201BN7

COL. 1 ITEM NUMBER (SEQUENCE NO.)	COL. 2 ENGINEER'S ESTIMATE OF QUANTITIES	COL. 3 CLASSIFICATIONS	COL. 4 UNIT PRICES (IN FIGURES) DOLLARS	CTS	COL. 5 EXTENDED AMOUNTS (IN FIGURES) DOLLARS	CTS
52.11D12C (057)	30.0 L.F.	12" DUCTILE IRON PIPE BASIN CONNECTION (CHUTE CONNECTION WORK ONLY)	$ 500	00	$ 15,000	
52.11D12D (058)	25.0 L.F.	12" DUCTILE IRON PIPE BASIN CONNECTION FOR MODIFICATION AND/OR REPLACEMENT OF CATCH BASINS	$ 500		$ 12,500	
52.11V12 (059)	25.0 L.F.	12" EXTRA STRENGTH VITRIFIED PIPE BASIN CONNECTION	$ 500		$ 12,500	
52.11V12C (060)	25.0 L.F.	12" EXTRA STRENGTH VITRIFIED PIPE BASIN CONNECTION (CHUTE CONNECTION WORK ONLY)	$ 500		$ 12,500	

NEW YORK CITY DEPARTMENT OF DESIGN AND CONSTRUCTION
DIVISION OF INFRASTRUCTURE - BUREAU OF DESIGN

Contract PIN 8502017SE0023C
Project ID SEK201BN7

COL. 1 ITEM NUMBER (SEQUENCE NO.)	COL. 2 ENGINEER'S ESTIMATE OF QUANTITIES	COL. 3 CLASSIFICATIONS	COL. 4 UNIT PRICES (IN FIGURES) DOLLARS	CTS	COL. 5 EXTENDED AMOUNTS (IN FIGURES) DOLLARS	CTS
52.11V12D (061)	25.0 L.F.	12" EXTRA STRENGTH VITRIFIED PIPE BASIN CONNECTION FOR MODIFICATION AND/OR REPLACEMENT OF CATCH BASINS	$ 500	.	$ 12,500	.
52.21V08 (062)	5.0 V.F.	8" E.S.V.P. RISER FOR HOUSE CONNECTION	$	01	$	05
52.21V10 (063)	5.0 V.F.	10" E.S.V.P. RISER FOR HOUSE CONNECTION	$	01	$	05
52.31V06P00 (064)	15.0 EACH	6" E.S.V.P. SPUR FOR HOUSE CONNECTION ON E.S.V.P. SEWER	$	01	$	15

NEW YORK CITY DEPARTMENT OF DESIGN AND CONSTRUCTION
DIVISION OF INFRASTRUCTURE - BUREAU OF DESIGN

Contract PIN 8502017SE0023C
Project ID SEK201BN7

COL. 1 ITEM NUMBER (SEQUENCE NO.)	COL. 2 ENGINEER'S ESTIMATE OF QUANTITIES	COL. 3 CLASSIFICATIONS	COL. 4 UNIT PRICES (IN FIGURES) DOLLARS	CTS	COL. 5 EXTENDED AMOUNTS (IN FIGURES) DOLLARS	CTS
52.31V08P00 (065)	10.0 EACH	8" E.S.V.P. SPUR FOR HOUSE CONNECTION ON E.S.V.P. SEWER	$	01	$	10
52.41D06N (066)	40.0 L.F.	NEW 6" D.I.P. HOUSE CONNECTION DRAIN ON STONE BEDDING **Unit price bid shall not be greater than: $ 75.00**	$ 75	.__	$ 3000	.__
52.41D06R (067)	40.0 L.F.	6" D.I.P. HOUSE CONNECTION DRAIN ON CONCRETE CRADLE (RECONNECTION)	$ 150	.__	$ 6000	.__
52.41V06N (068)	40.0 L.F.	NEW 6" E.S.V.P. HOUSE CONNECTION DRAIN ON CONCRETE CRADLE **Unit price bid shall not be greater than: $ 75.00**	$ 75	.__	$ 3000	.__

NEW YORK CITY DEPARTMENT OF DESIGN AND CONSTRUCTION
DIVISION OF INFRASTRUCTURE - BUREAU OF DESIGN

Contract PIN 8502017SE0023C
Project ID SEK201BN7

COL. 1 ITEM NUMBER (SEQUENCE NO.)	COL. 2 ENGINEER'S ESTIMATE OF QUANTITIES	COL. 3 CLASSIFICATIONS	COL. 4 UNIT PRICES (IN FIGURES) DOLLARS	CTS	COL. 5 EXTENDED AMOUNTS (IN FIGURES) DOLLARS	CTS
52.41V06R (069)	40.0 L.F.	6" E.S.V.P. HOUSE CONNECTION DRAIN ON CONCRETE CRADLE (RECONNECTION)	$ 150	.__	$ 6000	.__
53.11DR (070)	7,450.0 L.F.	TELEVISION INSPECTION AND DIGITAL AUDIO-VISUAL RECORDING OF SEWERS	$ 10	.__	$ 74,500	.__
6.43 D (071)	3,385.0 SETS	DIGITAL PHOTOGRAPHS	$ 15	.__	$ 50,775	.__
6.70 (072)	1.0 L.S.	MAINTENANCE AND PROTECTION OF TRAFFIC **Unit price bid shall not be less than: $ 85,000.00**	$ 225,000	.__	$ 225,000	.__

NEW YORK CITY DEPARTMENT OF DESIGN AND CONSTRUCTION
DIVISION OF INFRASTRUCTURE - BUREAU OF DESIGN

Contract PIN 8502017SE0023C
Project ID SEK201BN7

COL. 1 ITEM NUMBER (SEQUENCE NO.)	COL. 2 ENGINEER'S ESTIMATE OF QUANTITIES	COL. 3 CLASSIFICATIONS	COL. 4 UNIT PRICES (IN FIGURES) DOLLARS	CTS	COL. 5 EXTENDED AMOUNTS (IN FIGURES) DOLLARS	CTS
60.11R520 (073)	50.0 L.F.	FURNISHING AND DELIVERING 20-INCH DUCTILE IRON RESTRAINED JOINT PIPE (CLASS 55)	$ 75	.__	$ 3750	.__
60.11R606 (074)	100.0 L.F.	FURNISHING AND DELIVERING 6-INCH DUCTILE IRON RESTRAINED JOINT PIPE (CLASS 56)	$ 30	.__	$ 3000	.__
60.11R608 (075)	200.0 L.F.	FURNISHING AND DELIVERING 8-INCH DUCTILE IRON RESTRAINED JOINT PIPE (CLASS 56)	$ 40	.__	$ 8000	.__
60.11R612 (076)	500.0 L.F.	FURNISHING AND DELIVERING 12-INCH DUCTILE IRON RESTRAINED JOINT PIPE (CLASS 56)	$ 60	.__	$ 30,000	.__

NEW YORK CITY DEPARTMENT OF DESIGN AND CONSTRUCTION
DIVISION OF INFRASTRUCTURE - BUREAU OF DESIGN

Contract PIN 8502017SE0023C
Project ID SEK201BN7

COL. 1 ITEM NUMBER (SEQUENCE NO.)	COL. 2 ENGINEER'S ESTIMATE OF QUANTITIES	COL. 3 CLASSIFICATIONS	COL. 4 UNIT PRICES (IN FIGURES) DOLLARS	CTS	COL. 5 EXTENDED AMOUNTS (IN FIGURES) DOLLARS	CTS
60.12D06 (077)	110.0 L.F.	LAYING 6-INCH DUCTILE IRON PIPE AND FITTINGS	$ 40	.—	$ 4,400	.—
60.12D08 (078)	220.0 L.F.	LAYING 8-INCH DUCTILE IRON PIPE AND FITTINGS	$ 55	.—	$ 12,100	.—
60.12D12 (079)	560.0 L.F.	LAYING 12-INCH DUCTILE IRON PIPE AND FITTINGS	$ 65	.—	$ 36,400	.—
60.12D20 (080)	55.0 L.F.	LAYING 20-INCH DUCTILE IRON PIPE AND FITTINGS	$ 75	.—	$ 4125	.—

NEW YORK CITY DEPARTMENT OF DESIGN AND CONSTRUCTION
DIVISION OF INFRASTRUCTURE - BUREAU OF DESIGN

Contract PIN 8502017SE0023C
Project ID SEK201BN7

COL. 1 ITEM NUMBER (SEQUENCE NO.)	COL. 2 ENGINEER'S ESTIMATE OF QUANTITIES	COL. 3 CLASSIFICATIONS	COL. 4 UNIT PRICES (IN FIGURES) DOLLARS	CTS	COL. 5 EXTENDED AMOUNTS (IN FIGURES) DOLLARS	CTS
60.13M0A24 (081)	2.0 TONS	FURNISHING AND DELIVERING DUCTILE IRON MECHANICAL JOINT 24-INCH DIAMETER AND SMALLER FITTINGS, INCLUDING WEDGE TYPE RETAINER GLANDS	$ 3000	.__	$ 6,000	.__
61.11DMM06 (082)	2.0 EACH	FURNISHING AND DELIVERING 6-INCH MECHANICAL JOINT DUCTILE IRON GATE VALVE COMPLETE WITH WEDGE TYPE RETAINER GLANDS	$ 450	.__	$ 900	.__
61.11DMM08 (083)	4.0 EACH	FURNISHING AND DELIVERING 8-INCH MECHANICAL JOINT DUCTILE IRON GATE VALVE COMPLETE WITH WEDGE TYPE RETAINER GLANDS	$ 600	.__	$ 2400	.__
61.11DMM12 (084)	5.0 EACH	FURNISHING AND DELIVERING 12-INCH MECHANICAL JOINT DUCTILE IRON GATE VALVE COMPLETE WITH WEDGE TYPE RETAINER GLANDS	$ 1125	.__	$ 5625	.__

NEW YORK CITY DEPARTMENT OF DESIGN AND CONSTRUCTION
DIVISION OF INFRASTRUCTURE - BUREAU OF DESIGN

Contract PIN 8502017SE0023C
Project ID SEK201BN7

COL. 1 ITEM NUMBER (SEQUENCE NO.)	COL. 2 ENGINEER'S ESTIMATE OF QUANTITIES	COL. 3 CLASSIFICATIONS	COL. 4 UNIT PRICES (IN FIGURES) DOLLARS	CTS	COL. 5 EXTENDED AMOUNTS (IN FIGURES) DOLLARS	CTS
61.11DMM20 (085)	1.0 EACH	FURNISHING AND DELIVERING 20-INCH MECHANICAL JOINT DUCTILE IRON GATE VALVE COMPLETE WITH WEDGE TYPE RETAINER GLANDS	$ 20,000	.__	$ 20,000	.__
61.11TWC03 (086)	2.0 EACH	FURNISHING AND DELIVERING 3-INCH WET CONNECTION TAPPING VALVE COMPLETE WITH WEDGE TYPE RETAINER GLANDS	$ 225	.__	$ 450	.__
61.11TWC04 (087)	2.0 EACH	FURNISHING AND DELIVERING 4-INCH WET CONNECTION TAPPING VALVE COMPLETE WITH WEDGE TYPE RETAINER GLANDS	$ 260	.__	$ 520	.__
61.11TWC06 (088)	4.0 EACH	FURNISHING AND DELIVERING 6-INCH WET CONNECTION TAPPING VALVE COMPLETE WITH WEDGE TYPE RETAINER GLANDS	$ 340	.__	$ 1360	.__

NEW YORK CITY DEPARTMENT OF DESIGN AND CONSTRUCTION
DIVISION OF INFRASTRUCTURE - BUREAU OF DESIGN

Contract PIN 8502017SE0023C
Project ID SEK201BN7

COL. 1 ITEM NUMBER (SEQUENCE NO.)	COL. 2 ENGINEER'S ESTIMATE OF QUANTITIES	COL. 3 CLASSIFICATIONS	COL. 4 UNIT PRICES (IN FIGURES) DOLLARS	CTS	COL. 5 EXTENDED AMOUNTS (IN FIGURES) DOLLARS	CTS
61.11TWC08 (089)	5.0 EACH	FURNISHING AND DELIVERING 8-INCH WET CONNECTION TAPPING VALVE COMPLETE WITH WEDGE TYPE RETAINER GLANDS	$ 525	.__	$ 2625	.__
61.11TWC12 (090)	6.0 EACH	FURNISHING AND DELIVERING 12-INCH WET CONNECTION TAPPING VALVE COMPLETE WITH WEDGE TYPE RETAINER GLANDS	$ 675	.__	$ 4050	.__
61.12DMM06 (091)	2.0 EACH	SETTING 6-INCH MECHANICAL JOINT DUCTILE IRON GATE VALVE COMPLETE WITH WEDGE TYPE RETAINER GLANDS	$ 525	.__	$ 1050	.__
61.12DMM08 (092)	4.0 EACH	SETTING 8-INCH MECHANICAL JOINT DUCTILE IRON GATE VALVE COMPLETE WITH WEDGE TYPE RETAINER GLANDS	$ 750	.__	$ 3000	.__

NEW YORK CITY DEPARTMENT OF DESIGN AND CONSTRUCTION
DIVISION OF INFRASTRUCTURE - BUREAU OF DESIGN

Contract PIN 8502017SE0023C
Project ID SEK201BN7

COL. 1 ITEM NUMBER (SEQUENCE NO.)	COL. 2 ENGINEER'S ESTIMATE OF QUANTITIES	COL. 3 CLASSIFICATIONS	COL. 4 UNIT PRICES (IN FIGURES) DOLLARS	CTS	COL. 5 EXTENDED AMOUNTS (IN FIGURES) DOLLARS	CTS
61.12DMM12 (093)	5.0 EACH	SETTING 12-INCH MECHANICAL JOINT DUCTILE IRON GATE VALVE COMPLETE WITH WEDGE TYPE RETAINER GLANDS	$ 1125	.—	$ 5625	.—
61.12DMM20 (094)	1.0 EACH	SETTING 20-INCH MECHANICAL JOINT DUCTILE IRON GATE VALVE COMPLETE WITH WEDGE TYPE RETAINER GLANDS	$ 5000	.—	$ 5000	.—
61.12TWC03 (095)	2.0 EACH	SETTING 3-INCH WET CONNECTION TAPPING VALVE COMPLETE WITH WEDGE TYPE RETAINER GLANDS	$ 260	.—	$ 520	.—
61.12TWC04 (096)	2.0 EACH	SETTING 4-INCH WET CONNECTION TAPPING VALVE COMPLETE WITH WEDGE TYPE RETAINER GLANDS	$ 300	.—	$ 600	.—

NEW YORK CITY DEPARTMENT OF DESIGN AND CONSTRUCTION
DIVISION OF INFRASTRUCTURE - BUREAU OF DESIGN

Contract PIN 8502017SE0023C
Project ID SEK201BN7

COL. 1 ITEM NUMBER (SEQUENCE NO.)	COL. 2 ENGINEER'S ESTIMATE OF QUANTITIES	COL. 3 CLASSIFICATIONS	COL. 4 UNIT PRICES (IN FIGURES) DOLLARS	CTS	COL. 5 EXTENDED AMOUNTS (IN FIGURES) DOLLARS	CTS
61.12TWC06 (097)	4.0 EACH	SETTING 6-INCH WET CONNECTION TAPPING VALVE COMPLETE WITH WEDGE TYPE RETAINER GLANDS	$ 450	.__	$ 1800	.__
61.12TWC08 (098)	5.0 EACH	SETTING 8-INCH WET CONNECTION TAPPING VALVE COMPLETE WITH WEDGE TYPE RETAINER GLANDS	$ 600	.__	$ 3000	.__
61.12TWC12 (099)	6.0 EACH	SETTING 12-INCH WET CONNECTION TAPPING VALVE COMPLETE WITH WEDGE TYPE RETAINER GLANDS	$ 750	.__	$ 4500	.__
62.11SD (100)	5.0 EACH	FURNISHING AND DELIVERING HYDRANTS	$ 1400	.__	$ 7000	.__

NEW YORK CITY DEPARTMENT OF DESIGN AND CONSTRUCTION
DIVISION OF INFRASTRUCTURE - BUREAU OF DESIGN

Contract PIN 8502017SE0023C
Project ID SEK201BN7

COL. 1 ITEM NUMBER (SEQUENCE NO.)	COL. 2 ENGINEER'S ESTIMATE OF QUANTITIES	COL. 3 CLASSIFICATIONS	COL. 4 UNIT PRICES (IN FIGURES) DOLLARS	CTS	COL. 5 EXTENDED AMOUNTS (IN FIGURES) DOLLARS	CTS
62.12SG (101)	5.0 EACH	SETTING HYDRANTS COMPLETE WITH WEDGE TYPE RETAINER GLANDS	$ 750	.	$ 3750	.
62.13RH (102)	5.0 EACH	REMOVING HYDRANTS	$ 160	.	$ 800	.
62.14FS (103)	10.0 EACH	FURNISHING, DELIVERING AND INSTALLING HYDRANT FENDERS	$ 150	.	$ 1500	.
63.11VC (104)	4.0 TONS	FURNISHING AND DELIVERING VARIOUS CASTINGS	$ 750	.	$ 3000	.

NEW YORK CITY DEPARTMENT OF DESIGN AND CONSTRUCTION
DIVISION OF INFRASTRUCTURE - BUREAU OF DESIGN

Contract PIN 8502017SE0023C
Project ID SEK201BN7

COL. 1 ITEM NUMBER (SEQUENCE NO.)	COL. 2 ENGINEER'S ESTIMATE OF QUANTITIES	COL. 3 CLASSIFICATIONS	COL. 4 UNIT PRICES (IN FIGURES) DOLLARS	CTS	COL. 5 EXTENDED AMOUNTS (IN FIGURES) DOLLARS	CTS
64.11EL (105)	2.0 EACH	WITHDRAWING AND REPLACING HOUSE SERVICES USING 1-1/2-INCH OR LARGER SCREW TAPS	$ 190	.—	$ 380	.—
64.11ST (106)	8.0 EACH	WITHDRAWING AND REPLACING HOUSE SERVICES USING SMALLER THAN 1-1/2-INCH SCREW TAPS	$ 135	.—	$ 1080	.—
64.12COEG (107)	15.0 L.F.	CUTTING AND OFFSETTING HOUSE SERVICE WATER CONNECTIONS (EQUAL TO OR GREATER THAN 3-INCH DIAMETER)	$ 150	.—	$ 2250	.—
64.12COLT (108)	25.0 L.F.	CUTTING AND OFFSETTING HOUSE SERVICE WATER CONNECTIONS (LESS THAN 3-INCH DIAMETER)	$ 165	.—	$ 4125	.—

NEW YORK CITY DEPARTMENT OF DESIGN AND CONSTRUCTION
DIVISION OF INFRASTRUCTURE - BUREAU OF DESIGN

Contract PIN 8502017SE0023C
Project ID SEK201BN7

COL. 1 ITEM NUMBER (SEQUENCE NO.)	COL. 2 ENGINEER'S ESTIMATE OF QUANTITIES	COL. 3 CLASSIFICATIONS	COL. 4 UNIT PRICES (IN FIGURES) DOLLARS	CTS	COL. 5 EXTENDED AMOUNTS (IN FIGURES) DOLLARS	CTS
64.12ESEG (109)	100.0 L.F.	EXTENDING HOUSE SERVICE WATER CONNECTIONS (EQUAL TO OR GREATER THAN 3-INCH DIAMETER)	$ 60	.__	$ 6000	.__
64.12ESLT (110)	200.0 L.F.	EXTENDING HOUSE SERVICE WATER CONNECTIONS (LESS THAN 3-INCH DIAMETER)	$ 45	.__	$ 9000	.__
64.13WC08 (111)	3.0 EACH	FURNISHING, DELIVERING AND INSTALLING WET CONNECTION SLEEVE ON 8-INCH WATER MAIN PIPE WITH VARIOUS OUTLETS	$ 560	.__	$ 1680	.__
64.13WC12 (112)	4.0 EACH	FURNISHING, DELIVERING AND INSTALLING WET CONNECTION SLEEVE ON 12-INCH WATER MAIN PIPE WITH VARIOUS OUTLETS	$ 500	.__	$ 2000	.__

NEW YORK CITY DEPARTMENT OF DESIGN AND CONSTRUCTION
DIVISION OF INFRASTRUCTURE - BUREAU OF DESIGN

Contract PIN 8502017SE0023C
Project ID SEK201BN7

COL. 1 ITEM NUMBER (SEQUENCE NO.)	COL. 2 ENGINEER'S ESTIMATE OF QUANTITIES	COL. 3 CLASSIFICATIONS	COL. 4 UNIT PRICES (IN FIGURES) DOLLARS	CTS	COL. 5 EXTENDED AMOUNTS (IN FIGURES) DOLLARS	CTS
64.13WC20 (113)	1.0 EACH	FURNISHING, DELIVERING AND INSTALLING WET CONNECTION SLEEVE ON 20-INCH WATER MAIN PIPE WITH VARIOUS OUTLETS	$ 500	.	$ 500	.
65.11BR (114)	500.0 LBS.	FURNISHING, DELIVERING AND INSTALLING BANDS, RODS, WASHERS, ETC., COMPLETE, FOR RESTRAINING JOINTS	$ 20	.	$ 10,000	.
65.21PS (115)	100.0 L.F.	FURNISHING AND PLACING POLYETHYLENE SLEEVE **Unit price bid shall not be less than: $ 2.00**	$ 2	.	$ 200	.
65.31FF (116)	500.0 S.F.	FURNISHING, DELIVERING AND PLACING FILTER FABRIC **Unit price bid shall not be less than: $ 0.10**	$	.10	$ 50	.

NEW YORK CITY DEPARTMENT OF DESIGN AND CONSTRUCTION
DIVISION OF INFRASTRUCTURE - BUREAU OF DESIGN

Contract PIN 8502017SE0023C
Project ID SEK201BN7

COL. 1 ITEM NUMBER (SEQUENCE NO.)	COL. 2 ENGINEER'S ESTIMATE OF QUANTITIES	COL. 3 CLASSIFICATIONS	COL. 4 UNIT PRICES (IN FIGURES) DOLLARS	CTS	COL. 5 EXTENDED AMOUNTS (IN FIGURES) DOLLARS	CTS
65.71SG (117)	10.0 C.Y.	FURNISHING, DELIVERING AND PLACING SCREENED GRAVEL OR SCREENED BROKEN STONE BEDDING	$ 200		$ 2000	
7.13 A (118)	1.0 L.S.	MAINTENANCE OF SITE **Unit price bid shall not be less than: $ 80,000.00**	$ 198,595	40	$ 198,595	40
70.21DK (119)	50.0 S.Y.	DECKING	$ 500		$ 25,000	
70.31FN (120)	15,000.0 L.F.	FENCING **Unit price bid shall not be less than: $ 1.50**	$ 2		$ 30,000	

NEW YORK CITY DEPARTMENT OF DESIGN AND CONSTRUCTION
DIVISION OF INFRASTRUCTURE - BUREAU OF DESIGN

Contract PIN 8502017SE0023C
Project ID SEK201BN7

COL. 1 ITEM NUMBER (SEQUENCE NO.)	COL. 2 ENGINEER'S ESTIMATE OF QUANTITIES	COL. 3 CLASSIFICATIONS	COL. 4 UNIT PRICES (IN FIGURES) DOLLARS	CTS	COL. 5 EXTENDED AMOUNTS (IN FIGURES) DOLLARS	CTS
70.51EO (121)	25.0 C.Y.	EXCAVATION OF BOULDERS IN OPEN CUT **Unit price bid shall not be less than: $ 45.00**	$ 75	.—	$ 1875	.—
70.61RE (122)	25.0 C.Y.	ROCK EXCAVATION	$ 500	.—	$ 12,500	.—
70.71SB (123)	50.0 C.Y.	STONE BALLAST **Unit price bid shall not be less than: $ 15.00**	$ 15	.—	$ 750	.—
70.91SW12 (124)	190.0 S.F.	FURNISHING AND PLACING SHEETING AND BRACING IN TRENCH FOR WATER MAIN PIPE 12-INCH IN DIAMETER AND LESS	$	.01	$ 1	.90

NEW YORK CITY DEPARTMENT OF DESIGN AND CONSTRUCTION
DIVISION OF INFRASTRUCTURE - BUREAU OF DESIGN

Contract PIN 8502017SE0023C
Project ID SEK201BN7

COL. 1 ITEM NUMBER (SEQUENCE NO.)	COL. 2 ENGINEER'S ESTIMATE OF QUANTITIES	COL. 3 CLASSIFICATIONS	COL. 4 UNIT PRICES (IN FIGURES) DOLLARS	CTS	COL. 5 EXTENDED AMOUNTS (IN FIGURES) DOLLARS	CTS
70.91SW20 (125)	500.0 S.F.	FURNISHING AND PLACING SHEETING AND BRACING IN TRENCH FOR WATER MAIN PIPE 20-INCH IN DIAMETER	$	.01	$ 5	.—
73.11AB (126)	3.0 C.Y.	ADDITIONAL BRICK MASONRY **Unit price bid shall not be less than: $ 50.00**	$ 62	.50	$ 187	.50
73.21AC (127)	20.0 C.Y.	ADDITIONAL CONCRETE **Unit price bid shall not be less than: $ 50.00**	$ 62	.50	$ 1250	.—
73.31AE2 (128)	470.0 C.Y.	ADDITIONAL EARTH EXCAVATION INCLUDING TEST PITS (OVER 12' TO 16' DEPTH) **Unit price bid shall not be less than: $ 15.00**	$ 20	.—	$ 9400	.—

NEW YORK CITY DEPARTMENT OF DESIGN AND CONSTRUCTION
DIVISION OF INFRASTRUCTURE - BUREAU OF DESIGN

Contract PIN 8502017SE0023C
Project ID SEK201BN7

COL. 1 ITEM NUMBER (SEQUENCE NO.)	COL. 2 ENGINEER'S ESTIMATE OF QUANTITIES	COL. 3 CLASSIFICATIONS	COL. 4 UNIT PRICES (IN FIGURES) DOLLARS	CTS	COL. 5 EXTENDED AMOUNTS (IN FIGURES) DOLLARS	CTS
73.31AE3 (129)	100.0 C.Y.	ADDITIONAL EARTH EXCAVATION INCLUDING TEST PITS (OVER 16' TO 20' DEPTH) **Unit price bid shall not be less than: $ 20.00**	$ 25	.—	$ 2500	.—
73.31AE4 (130)	25.0 C.Y.	ADDITIONAL EARTH EXCAVATION INCLUDING TEST PITS (OVER 20' TO 24' DEPTH) **Unit price bid shall not be less than: $ 30.00**	$ 30	.—	$ 750	.—
73.31AE5 (131)	20.0 C.Y.	ADDITIONAL EARTH EXCAVATION INCLUDING TEST PITS (OVER 24' DEPTH) **Unit price bid shall not be less than: $ 37.50**	$ 37	50	$ 750	.—
73.41AG (132)	6,000.0 C.Y.	ADDITIONAL SELECT GRANULAR BACKFILL **Unit price bid shall not be less than: $ 12.50**	$ 15	.—	$ 90,000	.—

NEW YORK CITY DEPARTMENT OF DESIGN AND CONSTRUCTION
DIVISION OF INFRASTRUCTURE - BUREAU OF DESIGN

Contract PIN 8502017SE0023C
Project ID SEK201BN7

COL. 1 ITEM NUMBER (SEQUENCE NO.)	COL. 2 ENGINEER'S ESTIMATE OF QUANTITIES	COL. 3 CLASSIFICATIONS	COL. 4 UNIT PRICES (IN FIGURES) DOLLARS	CTS	COL. 5 EXTENDED AMOUNTS (IN FIGURES) DOLLARS	CTS
73.51AS (133)	735.0 LBS.	ADDITIONAL STEEL REINFORCING BARS **Unit price bid shall not be less than: $1.00**	$ 1	.—	$ 735	.—
75.11RT (134)	75.0 L.F.	REMOVAL OF ABANDONED TRACKS	$ 500	.—	$ 37,500	.—
DSS006A (135)	300.0 P/HR	TREE CONSULTANT	$ 100	.00	$ 30,000 (CP)	.00
DSS008A (136)	2.0 EACH	MOBILIZATION (DEWATERING)	$ 1000	.—	$ 2000	.—

NEW YORK CITY DEPARTMENT OF DESIGN AND CONSTRUCTION
DIVISION OF INFRASTRUCTURE - BUREAU OF DESIGN

Contract PIN 8502017SE0023C
Project ID SEK201BN7

COL. 1 ITEM NUMBER (SEQUENCE NO.)	COL. 2 ENGINEER'S ESTIMATE OF QUANTITIES	COL. 3 CLASSIFICATIONS	COL. 4 UNIT PRICES (IN FIGURES) DOLLARS	CTS	COL. 5 EXTENDED AMOUNTS (IN FIGURES) DOLLARS	CTS
DSS008B (137)	75.0 L.F.	HEADER AND DISCHARGE PIPE INSTALLATION	$	01	$	75
DSS008C (138)	75.0 S/DAY	HEADER AND DISCHARGE PIPE RENTAL	$	01	$	75
DSS008D (139)	10.0 EACH	WELLPOINT INSTALLATION	$	01	$	10
DSS008E (140)	75.0 E/DAY	WELLPOINT RENTAL	$	01	$	75

NEW YORK CITY DEPARTMENT OF DESIGN AND CONSTRUCTION
DIVISION OF INFRASTRUCTURE - BUREAU OF DESIGN

Contract PIN 8502017SE0023C
Project ID SEK201BN7

COL. 1 ITEM NUMBER (SEQUENCE NO.)	COL. 2 ENGINEER'S ESTIMATE OF QUANTITIES	COL. 3 CLASSIFICATIONS	COL. 4 UNIT PRICES (IN FIGURES) DOLLARS	CTS	COL. 5 EXTENDED AMOUNTS (IN FIGURES) DOLLARS	CTS
DSS008F (141)	50.0 HRS	SYSTEM OPERATION	$	.01	$	.50
UTL-6.01.1 (142)	30.0 EACH	GAS MAIN CROSSING SEWER UP TO 24" IN DIAMETER (S6.01) **Unit price bid shall not be less than: $ 1,040.00**	$ 1040	.—	$ 31,200	.—
UTL-6.01.2 (143)	5.0 EACH	GAS MAIN CROSSING SEWER 30" IN DIAMETER (S6.01) **Unit price bid shall not be less than: $ 1,770.00**	$ 1770	.—	$ 8850	.—
UTL-6.01.3 (144)	5.0 EACH	GAS MAIN CROSSING SEWER 36" THRU 42" IN DIAMETER (S6.01) **Unit price bid shall not be less than: $ 2,040.00**	$ 2040	.—	$ 10200	.—

NEW YORK CITY DEPARTMENT OF DESIGN AND CONSTRUCTION
DIVISION OF INFRASTRUCTURE - BUREAU OF DESIGN

Contract PIN 8502017SE0023C
Project ID SEK201BN7

COL. 1 ITEM NUMBER (SEQUENCE NO.)	COL. 2 ENGINEER'S ESTIMATE OF QUANTITIES	COL. 3 CLASSIFICATIONS	COL. 4 UNIT PRICES (IN FIGURES) DOLLARS	CTS	COL. 5 EXTENDED AMOUNTS (IN FIGURES) DOLLARS	CTS
UTL-6.01.8 (145)	200.0 EACH	GAS SERVICES CROSSING TRENCHES AND/OR EXCAVATIONS (S6.01) **Unit price bid shall not be less than: $ 465.00**	$ 465	.—	$ 93,000	.—
UTL-6.01.9 (146)	10.0 EACH	GAS MAIN CROSSING WATER MAIN UP TO 20" IN DIAMETER (S6.01) **Unit price bid shall not be less than: $ 485.00**	$ 485	.—	$ 4850	.—
UTL-6.02 (147)	20.0 EACH	EXTRA EXCAVATION FOR THE INSTALLATION OF CATCH BASIN SEWER DRAIN PIPES WITH GAS INTERFERENCES (S6.02) **Unit price bid shall not be less than: $ 715.00**	$ 715	.—	$ 14,300	.—
UTL-6.03 (148)	1,500.0 L.F.	REMOVAL OF ABANDONED GAS FACILITIES. ALL SIZES. (S6.03) **Unit price bid shall not be less than: $ 15.00**	$ 15	.—	$ 22,500	.—

NEW YORK CITY DEPARTMENT OF DESIGN AND CONSTRUCTION
DIVISION OF INFRASTRUCTURE - BUREAU OF DESIGN

Contract PIN 8502017SE0023C
Project ID SEK201BN7

COL. 1 ITEM NUMBER (SEQUENCE NO.)	COL. 2 ENGINEER'S ESTIMATE OF QUANTITIES	COL. 3 CLASSIFICATIONS	COL. 4 UNIT PRICES (IN FIGURES) DOLLARS	CTS	COL. 5 EXTENDED AMOUNTS (IN FIGURES) DOLLARS	CTS
UTL-6.03.1 (149)	200.0 L.F.	REMOVAL OF ABANDONED GAS FACILITIES WITH POSSIBLE COAL TAR WRAP. ALL SIZES. (FOR NATIONAL GRID WORK ONLY) (S6.03) **Unit price bid shall not be less than: $ 25.00**	$ 25	.—	$ 5000	.—
UTL-6.04 (150)	20.0 EACH	ADJUST HARDWARE TO GRADE USING SPACER RINGS/ADAPTORS. (STREET REPAVING.) (S6.04) **Unit price bid shall not be less than: $ 35.00**	$ 35	.—	$ 700	.—
UTL-6.05 (151)	20.0 EACH	ADJUST HARDWARE TO GRADE BY RESETTING. (ROAD RECONSTRUCTION.) (S6.05) **Unit price bid shall not be less than: $ 65.00**	$ 65	.—	$ 1300	.—
UTL-6.06 (152)	1,400.0 C.Y.	SPECIAL CARE EXCAVATION AND BACKFILLING (S6.06) **Unit price bid shall not be less than: $ 180.00**	$ 180	.—	$ 252,000	.—

NEW YORK CITY DEPARTMENT OF DESIGN AND CONSTRUCTION
DIVISION OF INFRASTRUCTURE - BUREAU OF DESIGN

Contract PIN 8502017SE0023C
Project ID SEK201BN7

COL. 1 ITEM NUMBER (SEQUENCE NO.)	COL. 2 ENGINEER'S ESTIMATE OF QUANTITIES	COL. 3 CLASSIFICATIONS	COL. 4 UNIT PRICES (IN FIGURES) DOLLARS	CTS	COL. 5 EXTENDED AMOUNTS (IN FIGURES) DOLLARS	CTS
UTL-6.07 (153)	100.0 C.Y.	TEST PITS FOR GAS FACILITIES (S6.07) **Unit price bid shall not be less than: $ 100.00**	$ 200	.__	$ 20,000	.__
UTL-6.09 (154)	50.0 C.Y.	TRENCH EXCAVATION AND BACKFILL FOR GAS MAINS AND SERVICES. GAS INSTALLED BY OTHERS (FOR NATIONAL GRID WORK ONLY). (S6.09) **Unit price bid shall not be less than: $ 190.00**	$ 190	.__	$ 9500	.__
UTL-GCS-2WS (155)	1.0 F.S.	GAS INTERFERENCES AND ACCOMMODATIONS PRICE BID SHALL BE FOR THE FIXED SUM OF $ 100,000.00	$ 100,000	.00	$ 100,000	.00

NEW YORK CITY DEPARTMENT OF DESIGN AND CONSTRUCTION
DIVISION OF INFRASTRUCTURE - BUREAU OF DESIGN

Contract PIN 8502017SE0023C
Project ID SEK201BN7

COL. 1 ITEM NUMBER (SEQUENCE NO.)	COL. 2 ENGINEER'S ESTIMATE OF QUANTITIES	COL. 3 CLASSIFICATIONS	COL. 4 UNIT PRICES (IN FIGURES) DOLLARS	CTS	COL. 5 EXTENDED AMOUNTS (IN FIGURES) DOLLARS	CTS
		TOTAL BID PRICE:			$ 7,200,000	00

PLEASE BE SURE A LEGIBLE BID IS ENTERED FOR EACH ITEM.

THE BIDDER SHALL INSERT THE TOTAL BID PRICE IN THE BID FORM ON PAGE C-4 OF THIS BID BOOKLET.

BID FORM
THE CITY OF NEW YORK
DEPARTMENT OF DESIGN AND CONSTRUCTION
DIVISION OF INFRASTRUCTURE

BID FOR FURNISHING ALL LABOR AND MATERIAL NECESSARY AND REQUIRED FOR:

PROJECT ID: SEK201BN7

RECONSTRUCTION OF COLLAPSED OR DEFECTIVE SANITARY, STORM OR COMBINED SEWERS VITRIFIED CLAY PIPE IN VARIOUS LOCATIONS IN BROOKLYN

Together With All Work Incidental Thereto
BOROUGH OF BROOKLYN
CITY OF NEW YORK

Name of Bidder: Perfetto Enterprises Co., Inc.

Date of Bid Opening: October 3, 2017

Bidder is: (Check one, whichever applies) Individual ( ) Partnership ( ) Corporation (x)

Place of Business of Bidder: 2074 Richmond Terrace, Staten Island, New York 10302

Bidder's Telephone Number: 718-442-4212 Fax Number: 718-442-4233

Bidder's E-Mail Address: cperfetto@perfettoent.com

Residence of Bidder (If Individual): _____

If Bidder is a Partnership, fill in the following blanks:

Names of Partners	Residence of Partners

If Bidder is a Corporation, fill in the following blanks:
Organized under the laws of the State of New York

Name and Home Address of President: Claudio Perfetto
134 Chapin Avenue, Staten Island, NY 10304

Name and Home Address of Secretary: same as above

Name and Home Address of Treasurer: same as above

The above-named Bidder affirms and declares:

1. The said bidder is of lawful age and the only one interested in this bid; and no person, firm or corporation other than hereinbefore named has any interest in this bid, or in the Contract proposed to be taken.

2. By submission of this bid, each bidder and each person signing on behalf of any bidder certifies, and in the case of a joint bid each party thereto certifies as to its own organization, under penalty of perjury, that to the best of its knowledge and belief: (1) the prices in this bid have been arrived at independently without collusion, consultation, communication or agreement, for the purpose of restricting competition, as to any matter relating to such prices with any other bidder or with any competitor; (2) unless otherwise required by law, the prices quoted in this bid have not been knowingly disclosed by the bidder and will not knowingly be disclosed by the bidder prior to opening, directly or indirectly, to any other bidder or to any competitor; and (3) No attempt has been made or will be made by the bidder to induce any other person, partnership or corporation to submit or not to submit a bid for the purpose of restricting competition.

3. No councilman or other officer or employee or person whose salary is payable in whole or in part from the City Treasury is directly or indirectly interested in this bid, or in the supplies, materials, equipment, work or labor to which it relates, or in any of the profits thereof.

4. The bidder is not in arrears to the City of New York upon debt or contract or taxes, and is not a defaulter, as surety or otherwise, upon any obligation of the City of New York, and has not been declared not responsible, or disqualified, by any agency of the City of New York or State of New York, nor is there any proceeding pending relating to the responsibility or qualification of the bidder to receive public contracts except as set forth on the Affirmation included as page C-6 of this Bid Booklet.

The bidder hereby affirms that it has paid all applicable City income, excise and other taxes for all years it has conducted business activities in New York City.

5. The bidder, as an individual, or as a member, partner, director or officer of the bidder, if the same be a firm, partnership or corporation, executes this document expressly warranting and representing that should this bid be accepted by the City and the Contract awarded to him, he and his subcontractors engaged in the performance: (1) will comply with the provisions of Section 6-108 of the Administrative Code of the City of New York and the non-discrimination provisions of Section 220a of the New York State Labor Law, as more expressly and in detail set forth in the Agreement; (2) will comply with Section 6-109 of the Administrative Code of the City of New York in relation to minimum wages and other stipulations as more expressly and in detail set forth in the Agreement; (3) have complied with the provisions of the aforesaid laws since their respective effective dates, and (4) will post notices to be furnished by the City, setting forth the requirements of the aforesaid laws in prominent and conspicuous places in each and every plant, factory, building and structure where employees engaged in the performance of the Contract can readily view it, and will continue to keep such notices posted until the supplies, materials and equipment, or work labor and services required to be furnished or rendered by the Contractor have been finally accepted by the City. In the event of any breach or violation of the foregoing, the Contractor may be subject to damages, liquidated or otherwise, cancellation of the Contract and suspension as a bidder for a period of three years. (The words, "the bidder", "he", "his", and "him" where used herein shall mean the individual bidder, firm, partnership or corporation executing this bid).

6. Compliance Report

The bidder, as an individual, or as a member, partner, director, or officer of the bidder, if the same be a firm, partnership, or corporation, (1) represents that his attention has been specifically drawn to Executive Order No. 50, dated, April 25, 1980, on Equal Employment Compliance of the contract, and (2) warrants that he will comply with the provisions of Executive Order No. 50. The Employment Report must be submitted as part of the bid.

The bidder, as an individual, or as a member, partner, director, or officer of the bidder, if the same be a firm, partnership, or corporation, executes this document expressly warranting that he will comply with: (1) the provision of the contract on providing records, Chapter 8.

7. By submission of this bid, the bidder certifies that it now has and will continue to have the financial capability to fully perform the work required for this contract. Any award of this contract will be made in reliance upon such certification. Upon request therefor, the bidder will submit written verification of such financial capability in a form that is acceptable to the department.

8. In accordance with Section 165 of the State Finance Law, the bidder agrees that tropical hardwoods, as defined in Section 165 of the State Finance Law, shall not be utilized in the performance of this Contract, except as the same are permitted by the foregoing provision of law.

9. The bidder has visited and examined the site of the work and has carefully examined the Contract in the form approved by the Corporation Counsel, and will execute the Contract and perform all its items, covenants and conditions, and will provide, furnish and deliver all the work, materials, supplies, tools and appliances for all labor and materials necessary or required for the hereinafter named work, all in strict conformity with the Contract, for the prices set forth in the Bid Schedule:

10. M/WBE UTILIZATION PLAN: By signing its bid, the bidder agrees to the Vendor Certification and Required Affirmations set forth below, unless a full waiver of the Participation Goals is granted. The Vendor Certification and Required Affirmations will be deemed to satisfy the requirement to complete Section V of Part II of Schedule B: M/WBE Utilization Plan.

Section V: Vendor Certification and Required Affirmations:

I hereby:

1) acknowledge my understanding of the M/WBE participation requirements as set forth in this Contract and the pertinent provisions of Section 6-129 of the Administrative Code of the City of New York and the rules promulgated thereunder;
2) affirm that the information supplied in support of the M/WBE Utilization Plan is true and correct;
3) agree, if awarded this Contract, to comply with the M/WBE participation requirements of this Contract, the pertinent provisions of Section 6-129, and the rules promulgated thereunder, all of which shall be deemed to be material terms of this Contract;
4) agree and affirm that it is a material term of this Contract that the Vendor will award the total dollar value of the M/WBE Participation Goals to certified MBEs and/or WBEs, unless a full waiver is obtained or such goals are modified by the Agency; and
5) agree and affirm, if awarded this Contract, to make all reasonable, good faith efforts to meet the M/WBE Participation Goals, or If a partial waiver is obtained or such goals are modified by the Agency, to meet the modified Participation Goals by soliciting and obtaining the participation of certified MBE and/or WBE firms.

(NO TEXT ON THIS PAGE)

BID FORM

PROJECT ID. : SEK201BN7

TOTAL BID PRICE: In the space provided below, the Bidder shall indicate its Total Bid Price in figures. Such Total Bid Price is set forth on the final page of the Bid Schedule.

TOTAL BID PRICE:
(a/k/a BID PROPOSAL)

$ 7,200,000.00

BB 10/3/17

BIDDER'S SIGNATURE AND AFFIDAVIT

Bidder: Perfetto Enterprises Co., Inc.

By: _____
(Signature of Partner or corporate officer)

_____

Attest:
(Corporate Seal)

Secretary of Corporate Bidder

Affidavit on the following page should be subscribed
and sworn to before a Notary Public

BID FORM (TO BE NOTARIZED)

AFFIDAVIT WHERE BIDDER IS AN INDIVIDUAL

STATE OF NEW YORK, COUNTY OF _____ ss:

_____ being duly sworn says:

I am the person described in and who executed the foregoing bid, and the several matters therein stated are in all respects true.

_____

(Signature of the person who signed the Bid)

Subscribed and sworn to before me this

_____ day of _____, _____

_____

Notary Public

AFFIDAVIT WHERE BIDDER IS A PARTNERSHIP

STATE OF NEW YORK, COUNTY OF _____ ss:

_____ being duly sworn says:

I am a member of _____ the firm described in and which executed the foregoing bid. I subscribed the name of the firm thereto on behalf of the firm, and the several matters therein stated are in all respects true.

_____

(Signature of Partner who signed the Bid)

Subscribed and sworn to before me this

_____ day of _____, _____

_____

Notary Public

AFFIDAVIT WHERE BIDDER IS A CORPORATION

STATE OF NEW YORK, COUNTY OF Richmond ss:

Claudio Perfetto being duly sworn says:

I am the President of the above named corporation whose name is subscribed to and which executed the foregoing bid. I reside at 134 Chapin Avenue, Staten Island, NY 10304.

I have knowledge of the several matters therein stated, and they are in all respects true.

_____

(Signature of Corporate Officer who signed the Bid)

Subscribed and sworn to before me this

2nd day of October, 2017

_____

Notary Public

KATHY FERETZANIS
Notary Public, State of New York
No. 01FE6022837
Qualified in Kings County
Commission Expires April 05, 2019

AFFIRMATION

PROJECT ID. SEK201BN7

The undersigned bidder affirms and declares that said bidder is not in arrears to the City of New York upon debt, contract or taxes and is not a defaulter, as surety or otherwise, upon obligation to the City of New York, and has not been declared not responsible, or disqualified, by any agency of the City of New York, nor is there any proceeding pending relating to the responsibility or qualification of the bidder to receive public contracts except: NONE

(If none, the bidder shall insert the word "None" in the space provided above.)

Full Name of Bidder: Perfetto Enterprises Co., Inc.
Address: 2074 Richmond Terrace
City Staten Island State New York Zip Code 10302

CHECK ONE BOX AND INCLUDE APPROPRIATE NUMBER:

/__/ A - Individual or Sole Proprietorship*
SOCIAL SECURITY NUMBER

/__/ B - Partnership, Joint Venture or other unincorporated organization
EMPLOYER IDENTIFICATION NUMBER

/x/ C- Corporation
EMPLOYER IDENTIFICATION NUMBER
20-0602614

By: _____
Signature

Title: President

If a corporation, place seal here

This affirmation must be signed by an officer or duly authorized representative.

*Under the Federal Privacy Act the furnishing of Social Security Numbers by bidders on City contracts is voluntary. Failure to provide a Social Security Number will not result in a bidder's disqualification. Social Security Numbers will be used to identify bidders, proposers or vendors to ensure their compliance with laws, to assist the City in enforcement of laws, as well as to provide the City a means of identifying of businesses which seek City contracts.

BID BOND 1
FORM OF BID BOND

KNOW ALL MEN BY THESE PRESENTS. That we, Perfetto Enterprises Co., Inc.
2074 Richmond Terrace
Staten Island, NY 10302

hereinafter referred to as the "Principal", and Selective Insurance Company of America
40 Wanatge Avenue
Branchville, NJ 07890

hereinafter referred to as the "Surety" are held and firmly bound to THE CITY OF NEW YORK, hereinafter referred to as the "CITY", or to its successors and assigns in the penal sum of

Ten Percent (10%) of Amount Bid

($ XXXX), Dollars lawful money of the United States, for the payment of which said sum of money well and truly to be made, we, and each of us, bind ourselves, our heirs, executors, administrators, successors and assigns, jointly and severally, firmly by these presents.

Whereas, the Principal is about to submit (or has submitted) to the City the accompanying proposal, hereby made a part hereof, to enter into a contract in writing for Project ID: SEK201BN7

PIN: 8502017SE0023C Reconstruction of Collapsed or Defective Sanitary, Storm or Combined Sewers Vitrified Clay Pipe in Various Locations in Brooklyn

NOW, THEREFORE, the conditions of this obligation are such that if the Principal shall not withdraw said Proposal without the consent of the City for a period of forty-five (45) days after the opening of bids and in the event of acceptance of the Principal's Proposal by the City, if the Principal shall:

(a) Within ten (10) days after notification by the City, execute in quadruplicate and deliver to the City all the executed counterparts of the Contract in the form set forth in the Contract Documents, in accordance with the proposal as accepted, and

(b) Furnish a performance bond and separate payment bond, as may be required by the City, for the faithful performance and proper fulfillment of such Contract, which bonds shall be satisfactory in all respects to the City and shall be executed by good and sufficient sureties, and

(c) In all respects perform the agreement created by the acceptance of said Proposal as provided in the Information for Bidders, bound herewith and made a part hereof, or if the City shall reject the aforesaid Proposal, then this obligation shall be null and void; otherwise to remain in full force and effect.

BID BOND 2

In the event that the Proposal of the Principal shall be accepted and the Contract be awarded to him the Surety hereunder agrees subject only to the payment by the Principal of the premium therefore, if requested by the City, to write the aforementioned performance and payment bonds in the form set forth in the Contract Documents.

It is expressly understood and agreed that the liability of the Surety for any and all claims hereunder shall in no event exceed the penal amount of this obligation as herein stated.

There shall be no liability under this bond if, in the event of the acceptance of the Principal's Proposal by the City, either a performance bond or payment bond, or both, shall not be required by the City on or before the 30th day after the date on which the City signs the Contract.

The surety, for the value received, hereby stipulates and agrees that the obligations of the Surety and its bond shall in no way be impaired or affected by any postponements of the date upon which the City will receive or open bids, or by any extensions of the time within which the City may accept the Principal's Proposal, or by any waiver by the City of any of the requirements of the Information for Bidders, and the Surety hereby waives notice of any such postponements, extensions, or waivers.

IN WITNESS WHEREOF, the Principal and the Surety have hereunto set their hands and seals and such of them as are corporations have caused their corporate seals to be hereto affixed and these presents to be signed by their proper officers the 3rd day of October, 2017.

(Seal)

Perfetto Enterprises Co., Inc. (L.S.)

Principal

By: _____

Claudio Perfetto, President

(Seal)

Selective Insurance Company of America

Surety

By: _____

Michael Culnen, Attorney-in-Fact

BID BOND 3

ACKNOWLEDGMENT OF PRINCIPAL, IF A CORPORATION

State of New York County of Richmond ss:
On this 2 day of October, 2017, before me personally came
Claudio Perfetto to me known, who, being by me duly sworn, did depose and say
that he resides at 134 Chapin Avenue, Staten Island NY 10304
that he is the President of Perfetto Enterprises Co. Inc.
the corporation described in and which executed the foregoing instrument; that he knows the seal of said corporation; that one of the seals affixed to said instrument is such seal; that it was so affixed by order of the directors of said corporation and that he signed his name thereto by like order.

KATHY FERETZANIS
Notary Public, State of New York
No. 01FE6022837
Qualified in Kings County
Commission Expires April 05, 2019

Notary Public

ACKNOWLEDGMENT OF PRINCIPAL, IF A PARTNERSHIP

State of _____ County of _____ ss:
On this _____ day of _____, _____, before me personally appeared
_____ to me known and known to me to be one of the members of the
firm of _____ described in and who executed the foregoing
instrument, and he acknowledged to me that he executed the same as and for the act and deed of said firm.

_____
Notary Public

ACKNOWLEDGMENT OF PRINCIPAL, IF AN INDIVIDUAL

State of _____ County of _____ ss:
On this _____ day of _____, _____, before me personally appeared
_____ to me known and known to me to be the person described in
and who executed the foregoing instrument and acknowledged that he executed the same.

_____
Notary Public

AFFIX ACKNOWLEDGMENTS AND JUSTIFICATION OF SURETIES

SURETY ACKNOWLEDGEMENT

State of **New Jersey**
SS:
County of **Essex**

On this **3rd** day of **October , 2017,** before me personally comes **Michael Culnen** to me known, who, being by me duly sworn, deposes and says that he resides in **Mendham Township, NJ** that he is the Attorney-In-Fact of the **Selective Insurance Company of America** the Corporation described in and which executed the foregoing instrument; that he knows that seal of said Corporation; that the seal affixed to the said instrument is such Corporate seal; that it was so affixed by the order of the Board of Directors of the said Corporation, and that he signed his name thereto by like order.

CATHY M KNOKE
NOTARY PUBLIC
STATE OF NEW JERSEY
ID # 50009608
MY COMMISSION EXPIRES FEB. 4, 2020

(Signature and Title of Official Taking Acknowledgement)

32466

SELECTIVE®

Selective Insurance Company of America
40 Wantage Avenue
Branchville, New Jersey 07890
973-948-3000

POWER OF ATTORNEY

SELECTIVE INSURANCE COMPANY OF AMERICA, a New Jersey corporation having its principal office at 40 Wantage Avenue, in Branchville, State of New Jersey ("SICA"), pursuant to Article VII, Section 1 of its By-Laws, which state in pertinent part:

> The Chairman of the Board, President, Chief Executive Officer, any Executive Vice President, any Senior Vice President or any Corporate Secretary may, from time to time, appoint attorneys in fact, and agents to act for and on behalf of the Corporation and they may give such appointee such authority, as his/her certificate of authority may prescribe, to sign with the Corporation's name and seal with the Corporation's seal, bonds, recognizances, contracts of indemnity and other writings obligatory in the nature of a bond, recognizance or conditional undertaking, and any of said Officers may, at any time, remove any such appointee and revoke the power and authority given him/her.

does hereby appoint: **MICHAEL CULNEN, CATHY KNOKE**

, its true and lawful attorney(s)-in-fact, full authority to execute on SICA's behalf fidelity and surety bonds or undertakings and other documents of a similar character issued by SICA in the course of its business, and to bind SICA thereby as fully as if such instruments had been duly executed by SICA's regularly elected officers at its principal office, in amounts or penalties not exceeding the sum of: **NO ONE BOND TO EXCEED TEN MILLION ($10,000,000.00)**

Signed this **19** day of **JUNE**, **2017**

SELECTIVE INSURANCE COMPANY OF AMERICA

By: _____
Brian C. Sarisky
Its SVP, Strategic Business Units, Commercial Lines

SELECTIVE INSURANCE COMPANY OF AMERICA CORPORATE SEAL 1926 NEW JERSEY

CERTIFIED COPY

STATE OF NEW JERSEY :
:ss. Branchville
COUNTY OF SUSSEX :

On this **19** day of **JUNE, 2017** before me, the undersigned officer, personally appeared Brian C. Sarisky, who acknowledged himself to be the Sr. Vice President of SICA, and that he, as such Sr. Vice President, being authorized so to do, executed the foregoing instrument for the purposes therein contained, by signing the name of the corporation by himself as Sr. Vice President and that the same was his free act and deed and the free act and deed of SICA.

Charlene Kimble
Notary Public of New Jersey
My Commission Expires 6/2/2021

_____
Notary Public

CHARLENE KIMBLE NOTARY PUBLIC NEW JERSEY

The power of attorney is signed and sealed by facsimile under and by the authority of the following Resolution adopted by the Board of Directors of SICA at a meeting duly called and held on the 6th of February 1987, to wit:

"RESOLVED, the Board of Directors of Selective Insurance Company of America authorizes and approves the use of a facsimile corporate seal, facsimile signatures of corporate officers and notarial acknowledgements thereof on powers of attorney for the execution of bonds, recognizances, contracts of indemnity and other writing obligatory in the nature of a bond, recognizance or conditional undertaking."

CERTIFICATION

I do hereby certify as SICA's Corporate Secretary that the foregoing extract of SICA's By-Laws and Resolution are still in force and effect and this Power of Attorney issued pursuant to and in accordance with the By-Laws is valid.

Signed this 3 day of October, 2017

_____
Michael H. Lanza, SICA Corporate Secretary

SELECTIVE INSURANCE COMPANY OF AMERICA CORPORATE SEAL 1926 NEW JERSEY

The power is void unless the Selective watermark appears.

B91 (6-16)

The RED border on the face of this document has a security VOID background pattern. If it is not RED and the word VOID is visible, this is not a certified copy. Telephone us at Area Code 973-948-3000.

SELECTIVE®

Selective Insurance Company of America
40 Wantage Avenue
Branchville, New Jersey 07890
973-948-3000

STATEMENT OF FINANCIAL CONDITION

I hereby certify that the following information is contained in the Annual Statement of Selective Insurance Company of America ("SICA") to the New Jersey Department of Banking and Insurance as of December 31, 2016:

ADMITTED ASSETS (in thousands)		LIABILITIES AND SURPLUS (in thousands)	
Bonds	$1,517,188	Reserve for losses and loss expenses	$980,125
Preferred stocks at convention value	3,960	Reserve for unearned premiums	357,292
Common stocks at convention values	85,162	Provision for unauthorized reinsurance	803
Subsidiary common stock at convention values	0	Commissions payable and contingent commissions	29,684
Short-term investments	86,071	Other accrued expenses	25,337
Mortgage loans on real estate (including collateral loans)	34,324	Other liabilities	352,332
Other invested assets	70,422	Total liabilities	1,745,573
Interest and dividends due or accrued	14,989		
Premiums receivable	336,651	Surplus as regards policyholders	568,591
Other admitted assets	165,397		
Total admitted assets	2,314,164	Total liabilities and surplus as regards policyholders	2,314,164

I further certify that the following is a true and exact excerpt from Article VII, Section 1 of the By-Laws of SICA, which is still valid and existing.

> The Chairman of the Board, President, Chief Executive Officer, any Executive Vice President, any Senior Vice President or any Corporate Secretary may, from time to time, appoint attorneys in fact, and agents to act for and on behalf of the Corporation and they may give such appointee such authority, as his/her certificate of authority may prescribe, to sign with the Corporation's name and seal with the Corporation's seal, bonds, recognizances, contracts of indemnity and other writings obligatory in the nature of a bond, recognizance or conditional undertaking, and any of said Officers may, at any time, remove any such appointee and revoke the power and authority given him/her.

IN WITNESS WHEREOF, I hereunto subscribe my name and affix the seal of SICA this 22 day of February 2017.

Michael H. Lanza
SICA Corporate Secretary

SEAL 1926 NEW JERSEY

STATE OF NEW JERSEY :
:ss. Branchville
COUNTY OF SUSSEX :

On this 22 day of February 2017, before me, the undersigned officer, personally appeared Michael H. Lanza, who acknowledged himself to be the Corporate Secretary of SICA, and that he, as such Corporate Secretary, being authorized so to do, executed the foregoing instrument for the purposes therein contained, by signing the name of the corporation by himself as Corporate Secretary.

CHARLENE KIMBLE NOTARY PUBLIC NEW JERSEY

Notary Public
My Commission Expires:

Charlene Kimble
Notary Public of New Jersey
My Commission Expires 6/2/2021

M/WBE PROGRAM

M/WBE UTILIZATION PLAN

M/WBE Program Requirements: The requirements for the M/WBE Program are set forth on the following pages of this Bid Booklet, in the section entitled "Notice to All Prospective Contractors".

Schedule B: M/WBE Utilization Plan: Schedule B: M/WBE Utilization Plan for this Contract is set forth in this Bid Booklet on the pages following the section entitled "Notice to All Prospective Contractors". The M/WBE Utilization Plan (Part I) indicates whether Participation Goals have been established for this Contract. If Participation Goals have been established for this Contract, the bidder must submit an M/WBE Utilization Plan (Part II) with its bid.

Waiver: The bidder may seek a full or partial pre-award waiver of the Participation Goals in accordance with the "Notice to All Prospective Contractors" (See Part A, Section 10). The bidder's request for a waiver must be submitted at least seven (7) calendar days prior to the bid date. Waiver requests submitted after the deadline will not be considered. The form for requesting a waiver of the Participation Goals is set forth in the M/WBE Utilization Plan (Part III).

Rejection of the Bid: The bidder must complete Schedule B: M/WBE Utilization Plan (Part II) set forth in this Bid Booklet on the pages following the section entitled "Notice to All Prospective Contractors". A Schedule B submitted by the bidder which does not include the Vendor Certification and Required Affirmations (See Section V of Part II) will be deemed to be non-responsive, unless a full waiver of the Participation Goals is granted (Schedule B, Part III). In the event that the City determines that the bidder has submitted a Schedule B where the Vendor Certification and Required Affirmations are completed but other aspects of the Schedule B are not complete, or contain a copy or computation error that is at odds with the Vendor Certification and Required Affirmations, the bidder will be notified by the Agency and will be given four (4) calendar days from receipt of notification to cure the specified deficiencies and return a completed Schedule B to the Agency. Failure to do so will result in a determination that the Bid is non-responsive. Receipt of notification is defined as the date notice is emailed or faxed (if the bidder has provided an email address or fax number), or no later than five (5) calendar days from the date of mailing or upon delivery, if delivered.

Impact on LBE Requirements: If Participation Goals have been established for the participation of M/WBEs, the contractor is not required to comply with the Locally Based Enterprise Program ("LBE"). The LBE Program is set forth in Article 67 of the Contract.

NOTICE TO ALL PROSPECTIVE CONTRACTORS

PARTICIPATION BY MINORITY-OWNED AND WOMEN-OWNED BUSINESS ENTERPRISES IN CITY PROCUREMENT

ARTICLE I. M/WBE PROGRAM

Local Law No. 129 of 2005 added and Local Law 1 of 2013 amended Section 6-129 of the Administrative Code of the City of New York (hereinafter "Section 6-129"). Section 6-129 establishes the program for participation in City procurement ("M/WBE Program") by minority- owned business enterprises ("MBEs") and women-owned business enterprises ("WBEs"), certified in accordance with Section 1304 of the New York City Charter. As stated in Section 6-129, the intent of the program is to address the impact of discrimination on the City's procurement process, and to promote the public interest in avoiding fraud and favoritism in the procurement process, increasing competition for City business, and lowering contract costs. The contract provisions contained herein are pursuant to Section 6-129, and the rules of the Department of Small Business Services ("DSBS") promulgated thereunder.

If this Contract is subject to the M/WBE Program established by Section 6-129, the specific requirements of MBE and/or WBE participation for this Contract are set forth in Schedule B of the Contract (entitled the "M/WBE Utilization Plan"), and are detailed below. The Contractor must comply with all applicable MBE and WBE requirements for this Contract.

All provisions of Section 6-129 are hereby incorporated in the Contract by reference and all terms used herein that are not defined herein shall have the meanings given such terms in Section 6-129. Article I, Part A, below, sets forth provisions related to the participation goals for construction, standard and professional services contracts. Article I, Part B, below, sets forth miscellaneous provisions related to the M/WBE Program.

PART A

PARTICIPATION GOALS FOR CONSTRUCTION, STANDARD AND PROFESSIONAL SERVICES CONTRACTS OR TASK ORDERS

1. The **MBE and/or WBE Participation Goals** established for this Contract or Task Orders issued pursuant to this Contract, ("**Participation Goals**"), as applicable, are set forth on Schedule B, Part I to this Contract (see Page 1, line 1 Total Participation Goals) or will be set forth on Schedule B, Part I to Task Orders issued pursuant to this Contract, as applicable.

The **Participation Goals** represent a percentage of the total dollar value of the Contract or Task Order, as applicable, that may be achieved by awarding subcontracts to firms certified with New York City Department of Small Business Services as MBEs and/or WBEs, and/or by crediting the participation of prime contractors and/or qualified joint ventures as provided in Section 3 below, unless the goals have been waived or modified by Agency in accordance with Section 6-129 and Part A, Sections 10 and 11 below, respectively.

2. If **Participation Goals** have been established for this Contract or Task Orders issued pursuant to this Contract, Contractor agrees or shall agree as a material term of the Contract that Contractor shall be subject to the **Participation Goals**, unless the goals are waived or modified by Agency in accordance with Section 6-129 and Part A, Sections 10 and 11 below, respectively.

3. If **Participation Goals** have been established for this Contract or Task Order issued pursuant to this Contract, a Contractor that is an MBE and/or WBE shall be permitted to count its own participation toward fulfillment of the relevant **Participation Goal**, provided that in accordance with Section 6-129 the value of Contractor's participation shall be determined by subtracting from the total value of the Contract or Task Order, as applicable, any amounts that the Contractor pays to direct subcontractors (as defined in Section 6-129(c)(13)), and provided further that a Contractor that is certified as both an MBE and a WBE may count its own participation either toward the goal for MBEs or the goal for WBEs, but not both.

A Contractor that is a qualified joint venture (as defined in Section 6-129(c)(30)) shall be permitted to count a percentage of its own participation toward fulfillment of the relevant **Participation Goal**. In accordance with Section 6-129, the value of Contractor's participation shall be determined by subtracting from the total value of the Contract or Task Order, as applicable, any amounts that Contractor pays to direct subcontractors, and then multiplying the remainder by the percentage to be applied to total profit to determine the amount to which an MBE or WBE is entitled pursuant to the joint venture agreement, provided that where a participant in a joint venture is certified as both an MBE and a WBE, such amount shall be counted either toward the goal for MBEs or the goal for WBEs, but not both.

4. A. If **Participation Goals** have been established for this Contract, a prospective contractor shall be required to submit with its bid or proposal, as applicable, a completed Schedule B, M/WBE Utilization Plan, Part II (see Pages 2-4) indicating: (a) whether the contractor is an MBE or WBE, or qualified joint venture; (b) the percentage of work it intends to award to direct subcontractors; and (c) in cases where the contractor intends to award direct subcontracts, a description of the type and dollar value of work designated for participation by MBEs and/or WBEs, and the time frames in which such work is scheduled to begin and end. In the event that this M/WBE Utilization Plan indicates that the bidder or proposer, as applicable, does not intend to meet the **Participation Goals**, the bid or proposal, as applicable, shall be deemed non-responsive, unless Agency has granted the bidder or proposer, as applicable, a pre- award waiver of the Participation Goals in accordance with Section 6-129 and Part A, Section 10 below.

B. (i) If this Contract is for a master services agreement or other requirements type contract that will result in the issuance of Task Orders that will be individually registered ("Master Services Agreement") and is subject to M/WBE **Participation Goals**, a prospective contractor shall be required to submit with its bid or proposal, as applicable, a completed Schedule B, M/WBE Participation Requirements for Master Services Agreements That Will Require Individually Registered Task Orders, Part II (page 2) indicating the prospective contractor's certification and required affirmations to make all reasonable good faith efforts to meet participation goals established on each individual Task Order issued pursuant to this Contract, or if a partial waiver is obtained or such goals are modified by the Agency, to meet the modified **Participation Goals** by soliciting and obtaining the participation of certified MBE and/or WBE firms. In the event that the Schedule B indicates that the bidder or proposer, as applicable, does not intend to meet the **Participation Goals** that may be established on Task Orders issued pursuant to this Contract, the bid or proposal, as applicable, shall be deemed nonresponsive.

(ii) **Participation Goals** on a Master Services Agreement will be established for individual Task Orders issued after the Master Services Agreement is awarded. If **Participation Goals** have been established on a Task Order, a contractor shall be required to submit a Schedule B – M/WBE Utilization Plan For Independently Registered Task Orders That Are Issued Pursuant to Master Services Agreements, Part II (see Pages 2-4) indicating: (a) whether the contractor is an MBE or WBE, or qualified joint venture; (b) the percentage of work it intends to award to direct subcontractors; and (c) in cases where the contractor intends to award direct subcontracts, a description of the type and dollar value of work designated for participation by MBEs and/or WBEs, and the time frames in which such work is scheduled to begin and end. The contractor must engage in good faith efforts to meet the **Participation Goals** as established for the Task Order unless Agency has granted the contractor a pre-award waiver of the Participation Goals in accordance with Section 6-129 and Part A, Section 10 below.

C. THE BIDDER/PROPOSER MUST COMPLETE THE SCHEDULE B INCLUDED HEREIN (SCHEDULE B, PART II). A SCHEDULE B SUBMITTED BY THE BIDDER/PROPOSER WHICH DOES NOT INCLUDE THE VENDOR CERTIFICATION AND REQUIRED AFFIRMATIONS (SEE SECTION V OF PART II) WILL BE DEEMED TO BE NON-RESPONSIVE, UNLESS A FULL WAIVER OF THE PARTICIPATION GOALS IS GRANTED (SCHEDULE B, PART III). IN THE EVENT THAT THE CITY DETERMINES THAT THE BIDDER/PROPOSER HAS SUBMITTED A SCHEDULE B WHERE THE VENDOR CERTIFICATION AND REQUIRED AFFIRMATIONS ARE COMPLETED BUT OTHER ASPECTS OF THE SCHEDULE B ARE NOT COMPLETE, OR CONTAIN A COPY OR COMPUTATION ERROR THAT IS AT ODDS WITH THE VENDOR CERTIFICATION AND AFFIRMATIONS, THE BIDDER/PROPOSER WILL BE NOTIFIED BY THE AGENCY AND WILL BE GIVEN FOUR (4) CALENDAR DAYS FROM RECEIPT OF NOTIFICATION TO CURE THE SPECIFIED DEFICIENCIES AND RETURN A COMPLETED SCHEDULE B TO THE AGENCY. FAILURE TO DO _

SO WILL RESULT IN A DETERMINATION THAT THE BID/PROPOSAL IS NON-RESPONSIVE. RECEIPT OF NOTIFICATION IS DEFINED AS THE DATE NOTICE IS E-MAILED OR FAXED (IF THE BIDDER/PROPOSER HAS PROVIDED AN E-MAIL ADDRESS OR FAX NUMBER), OR NO LATER THAN FIVE (5) CALENDAR DAYS FROM THE DATE OF MAILING OR UPON DELIVERY, IF DELIVERED.

5. Where an **M/WBE** Utilization Plan has been submitted, the Contractor shall, within 30 days of issuance by Agency of a notice to proceed, submit a list of proposed persons or entities to which it intends to award subcontracts within the subsequent 12 months. In the case of multiyear contracts, such list shall also be submitted every year thereafter. The Agency may also require the Contractor to report periodically about the contracts awarded by its direct subcontractors to indirect subcontractors (as defined in Section 6-129(c)(22)). **PLEASE NOTE: If this Contract is a public works project subject to GML §101(5) (i.e., a contract valued at or below $3M for projects in New York City) or if the Contract is subject to a project labor agreement in accordance with Labor Law §222, and the bidder is required to identify at the time of bid submission its intended subcontractors for the Wicks trades (plumbing and gas fitting; steam heating, hot water heating, ventilating and air conditioning (HVAC); and electric wiring), the Contractor must identify all those to which it intends to award construction subcontracts for any portion of the Wicks trade work at the time of bid submission, regardless of what point in the life of the contract such subcontracts will occur. In identifying intended subcontractors in the bid submission, bidders may satisfy any Participation Goals established for this Contract by proposing one or more subcontractors that are MBEs and/or WBEs for any portion of the Wicks trade work.** In the event that the Contractor's selection of a subcontractor is disapproved, the Contractor shall have a reasonable time to propose alternate subcontractors.

6. MBE and WBE firms must be certified by DSBS in order for the Contractor to credit such firms' participation toward the attainment of the **Participation Goals**. Such certification must occur prior to the firms' commencement of work. A list of MBE and WBE firms may be obtained from the DSBS website at www.nyc.gov/buycertified, by emailing DSBS at buyer@sbs.nyc.gov, by calling (212) 513-6356, or by visiting or writing DSBS at 110 William St., New York, New York, 10038, 7th floor. Eligible firms that have not yet been certified may contact DSBS in order to seek certification by visiting www.nyc.gov/getcertified, emailing MWBE@sbs.nyc.gov, or calling the DSBS certification helpline at (212) 513-6311. A firm that is certified as both an MBE and a WBE may be counted either toward the goal for MBEs or the goal for WBEs, but not both. No credit shall be given for participation by a graduate MBE or graduate WBE, as defined in Section 6-129(c)(20).

7. Where an **M/WBE** Utilization Plan has been submitted, the Contractor shall, with each voucher for payment, and/or periodically as Agency may require, submit statements, certified under penalty of perjury, which shall include, but not be limited to,: the total amount the Contractor paid to its direct subcontractors, and, where applicable pursuant to Section 6-129(j), the total amount direct subcontractors paid to indirect subcontractors; the names, addresses and contact numbers of each MBE or WBE hired as a subcontractor by the Contractor, and, where applicable, hired by any of the Contractor's direct subcontractors; and the dates and amounts paid to each MBE or WBE. The Contractor shall also submit, along with its voucher for final payment: the total amount it paid to subcontractors, and, where applicable pursuant to Section 6-129(j), the total amount its direct subcontractors paid directly to their indirect subcontractors; and a final list, certified under penalty of perjury, which shall include the name, address and contact information of each subcontractor that is an MBE or WBE, the work performed by, and the dates and amounts paid to each.

8. If payments made to, or work performed by, MBEs or WBEs are less than the amount specified in the Contractor's **M/WBE** Utilization Plan, Agency shall take appropriate action, in accordance with Section 6-129 and Article II below, unless the Contractor has obtained a modification of its **M/WBE** Utilization Plan in accordance with Section 6-129 and Part A, Section 11 below.

9. Where an **M/WBE** Utilization Plan has been submitted, and the Contractor requests a change order the value of which exceeds the greater of 10 percent of the Contract or Task Order, as applicable, or $500,000, Agency shall review the scope of work for the Contract or Task Order, as applicable, and the scale and types of work involved in the change order, and determine whether the **Participation Goals** should be modified.

10. Pre-award waiver of the **Participation Goals**. (a) A bidder or proposer, or contractor with respect to a Task Order, may seek a pre-award full or partial waiver of the **Participation Goals** in accordance with Section 6-129, which requests that Agency change one or more **Participation Goals** on the grounds that the **Participation Goals** are unreasonable in light of the availability of certified firms to perform the services required, or by demonstrating that it has legitimate business reasons for proposing a lower level of subcontracting in its M/WBE Utilization Plan.

(b) To apply for a full or partial waiver of the **Participation Goals**, a bidder, proposer, or contractor, as applicable, must complete Part III (Page 5) of Schedule B and submit such request no later than seven (7) calendar days prior to the date and time the bids, proposals, or Task Orders are due, in writing to the Agency by email at zhangji@ddc.nyc.gov or via facsimile at (718) 391-1886. Bidders, proposers, or contractors, as applicable, who have submitted requests will receive an Agency response by no later than two (2) calendar days prior to the due date for bids, proposals, or Task Orders; provided, however, that if that date would fall on a weekend or holiday, an Agency response will be provided by close-of-business on the business day before such weekend or holiday date.

(c) If the Agency determines that the **Participation Goals** are unreasonable in light of the availability of certified firms to perform the services required, it shall revise the solicitation and extend the deadline for bids and proposals, or revise the Task Order, as applicable.

(d) Agency may grant a full or partial waiver of the **Participation Goals** to a bidder, proposer or contractor, as applicable, who demonstrates—before submission of the bid, proposal or Task Order, as applicable—that it has legitimate business reasons for proposing the level of subcontracting in its **M/WBE** Utilization Plan. In making its determination, Agency shall consider factors that shall include, but not be limited to, whether the bidder, proposer or contractor, as applicable, has the capacity and the bona fide intention to perform the Contract without any subcontracting, or to perform the Contract without awarding the amount of subcontracts represented by the **Participation Goals**. In making such determination, Agency may consider whether the **M/WBE** Utilization Plan is consistent with past subcontracting practices of the bidder, proposer or contractor, as applicable, whether the bidder, proposer or contractor, as applicable, has made efforts to form a joint venture with a certified firm, and whether the bidder, proposer, or contractor, as applicable, has made good faith efforts to identify other portions of the Contract that it intends to subcontract.

11. Modification of **M/WBE** Utilization Plan. (a) A Contractor may request a modification of its **M/WBE** Utilization Plan after award of this Contract. **PLEASE NOTE: If this Contract is a public works project subject to GML §101(5) (i.e., a contract valued at or below $3M for projects in New York City) or if the Contract is subject to a project labor agreement in accordance with Labor Law §222, and the bidder is required to identify at the time of bid submission its intended subcontractors for the Wicks trades (plumbing and gas fitting; steam heating, hot water heating, ventilating and air conditioning (HVAC); and electric wiring), the Contractor may request a Modification of its M/WBE Utilization Plan as part of its bid submission.** The Agency may grant a request for Modification of a Contractor's **M/WBE** Utilization Plan if it determines that the Contractor has established, with appropriate documentary and other evidence, that it made reasonable, good faith efforts to meet the **Participation Goals.** In making such determination, Agency shall consider evidence of the following efforts, as applicable, along with any other relevant factors:

(i) The Contractor advertised opportunities to participate in the Contract, where appropriate, in general circulation media, trade and professional association publications and small business media, and publications of minority and women's business organizations;
(ii) The Contractor provided notice of specific opportunities to participate in the Contract, in a timely manner, to minority and women's business organizations;
(iii) The Contractor sent written notices, by certified mail or facsimile, in a timely manner, to advise MBEs or WBEs that their interest in the Contract was solicited;
(iv) The Contractor made efforts to identify portions of the work that could be substituted for portions originally designated for participation by MBEs and/or WBEs in the M/WBE Utilization Plan, and for which the Contractor claims an inability to retain MBEs or WBEs;

(v) The Contractor held meetings with MBEs and/or WBEs prior to the date their bids or proposals were due, for the purpose of explaining in detail the scope and requirements of the work for which their bids or proposals were solicited;

(vi) The Contractor made efforts to negotiate with MBEs and/or WBEs as relevant to perform specific subcontracts, or act as suppliers or service providers;

(vii) Timely written requests for assistance made by the Contractor to Agency's M/WBE liaison officer and to DSBS;

(viii) Description of how recommendations made by DSBS and Agency were acted upon and an explanation of why action upon such recommendations did not lead to the desired level of participation of MBEs and/or WBEs.

Agency's M/WBE officer shall provide written notice to the Contractor of the determination.

(b) The Agency may modify the **Participation Goals** when the scope of the work has been changed by the Agency in a manner that affects the scale and types of work that the Contractor indicated in its **M/WBE** Utilization Plan would be awarded to subcontractors.

12. If this Contract is for an indefinite quantity of construction, standard or professional services or is a requirements type contract and the Contractor has submitted an **M/WBE** Utilization Plan and has committed to subcontract work to MBEs and/or WBEs in order to meet the **Participation Goals**, the Contractor will not be deemed in violation of the M/WBE Program requirements for this Contract with regard to any work which was intended to be subcontracted to an MBE and/or WBE to the extent that the Agency has determined that such work is not needed.

13. If **Participation Goals** have been established for this Contract or a Task Order issued pursuant to this Contract, at least once annually during the term of the Contract or Task Order, as applicable, Agency shall review the Contractor's progress toward attainment of its M/WBE Utilization Plan, including but not limited to, by reviewing the percentage of work the Contractor has actually awarded to MBE and/or WBE subcontractors and the payments the Contractor made to such subcontractors.

14. If **Participation Goals** have been established for this Contract or a Task Order issued pursuant to this Contract, Agency shall evaluate and assess the Contractor's performance in meeting those goals, and such evaluation and assessment shall become part of the Contractor's overall contract performance evaluation.

PART B: MISCELLANEOUS

1. The Contractor shall take notice that, if this solicitation requires the establishment of an **M/WBE** Utilization Plan, the resulting contract may be audited by DSBS to determine compliance with Section 6-129. See §6-129(e)(10). Furthermore, such resulting contract may also be examined by the City's Comptroller to assess compliance with the **M/WBE** Utilization Plan.

2. Pursuant to DSBS rules, construction contracts that include a requirement for an **M/WBE** Utilization Plan shall not be subject to the law governing Locally Based Enterprises set forth in Section 6-108.1 of the Administrative Code of the City of New York.

3. DSBS is available to assist contractors and potential contractors in determining the availability of MBEs and/or WBEs to participate as subcontractors, and in identifying opportunities that are appropriate for participation by MBEs and/or WBEs in contracts.

4. Prospective contractors are encouraged to enter into qualified joint venture agreements with MBEs and/or WBEs as defined by Section 6-129(c)(30).

5. By submitting a bid or proposal the Contractor hereby acknowledges its understanding of the M/WBE Program requirements set forth herein and the pertinent provisions of Section 6-129, and any rules promulgated thereunder, and if awarded this Contract, the Contractor hereby agrees to comply with the M/WBE Program requirements of this Contract and pertinent provisions of Section 6-129, and any rules promulgated thereunder, all of which shall be deemed to be material terms of this Contract. The Contractor hereby agrees to make all reasonable, good faith efforts to solicit and obtain the participation of MBEs and/or WBEs to meet the required **Participation Goals**.

ARTICLE II. ENFORCEMENT

1. If Agency determines that a bidder or proposer, as applicable, has, in relation to this procurement, violated Section 6-129 or the DSBS rules promulgated pursuant to Section 6-129, Agency may disqualify such bidder or proposer, as applicable, from competing for this Contract and the Agency may revoke such bidder's or proposer's prequalification status, if applicable.

2. Whenever Agency believes that the Contractor or a subcontractor is not in compliance with Section 6-129 or the DSBS rules promulgated pursuant to Section 6-129, or any provision of this Contract that implements Section 6-129, including, but not limited to any **M/WBE** Utilization Plan, Agency shall send a written notice to the Contractor describing the alleged noncompliance and offering the Contractor an opportunity to be heard. Agency shall then conduct an investigation to determine whether such Contractor or subcontractor is in compliance.

3. In the event that the Contractor has been found to have violated Section 6-129, the DSBS rules promulgated pursuant to Section 6-129, or any provision of this Contract that implements Section 6-129, including, but not limited to, any **M/WBE** Utilization Plan, Agency may determine that one of the following actions should be taken:

(a) entering into an agreement with the Contractor allowing the Contractor to cure the violation;
(b) revoking the Contractor's pre-qualification to bid or make proposals for future contracts;
(c) making a finding that the Contractor is in default of the Contract;
(d) terminating the Contract;
(e) declaring the Contractor to be in breach of Contract;
(f) withholding payment or reimbursement;
(g) determining not to renew the Contract;
(h) assessing actual and consequential damages;
(i) assessing liquidated damages or reducing fees, provided that liquidated damages may be based on amounts representing costs of delays in carrying out the purposes of the M/WBE Program, or in meeting the purposes of the Contract, the costs of meeting utilization goals through additional procurements, the administrative costs of investigation and enforcement, or other factors set forth in the Contract;
(j) exercising rights under the Contract to procure goods, services or construction from another contractor and charge the cost of such contract to the Contractor that has been found to be in noncompliance; or
(k) taking any other appropriate remedy.

4. If an **M/WBE** Utilization Plan has been submitted, and pursuant to this Article II, Section 3, the Contractor has been found to have failed to fulfill its **Participation Goals** contained in its **M/WBE** Utilization Plan or the **Participation Goals** as modified by Agency pursuant to Article I, Part A, Section 11, Agency may assess liquidated damages in the amount of ten percent (10%) of the difference between the dollar amount of work required to be awarded to MBE and/or WBE firms to meet the **Participation Goals** and the dollar amount the Contractor actually awarded and paid, and/or credited, to MBE and/or WBE firms. In view of the difficulty of accurately ascertaining the loss which the City will suffer by reason of Contractor's failure to meet the **Participation Goals**, the foregoing amount is hereby fixed and agreed as the liquidated damages that the City will suffer by reason of such failure, and not as a penalty. Agency may deduct and retain out of any monies which may become due under this Contract the amount of any such liquidated damages; and in case the amount which may become due under this Contract shall be less than the amount of liquidated damages suffered by the City, the Contractor shall be liable to pay the difference.

5. Whenever Agency has reason to believe that an MBE and/or WBE is not qualified for certification, or is participating in a contract in a manner that does not serve a commercially useful function (as defined in Section 6-129(c)(8)), or has violated any provision of Section 6- 129, Agency shall notify the Commissioner of DSBS who shall determine whether the certification of such business enterprise should be revoked.

6. Statements made in any instrument submitted to Agency pursuant to Section 6-129 shall be submitted under penalty of perjury and any false or misleading statement or omission shall be grounds for the application of any applicable criminal and/or civil penalties for perjury. The making of a false or fraudulent statement by an MBE and/or WBE in any instrument submitted pursuant to Section 6-129 shall, in addition, be grounds for revocation of its certification.

7. The Contractor's record in implementing its **M/WBE** Utilization Plan shall be a factor in the evaluation of its performance. Whenever Agency determines that a Contractor's compliance with an **M/WBE** Utilization Plan has been unsatisfactory, Agency shall, after consultation with the City Chief Procurement Officer, file an advice of caution form for inclusion in VENDEX as caution data.

Tax ID #: 20-0002014 PIN #: 85018B0005

SCHEDULE B – M/WBE Utilization Plan
Part I: M/WBE Participation Goals

Part I to be completed by contracting agency

Contract Overview

APT E- Pin #	85018B0005	**FMS Project ID#:**	SEK201BN7
Project Title/ Agency PIN #	RECONSTRUCTION OF COLLAPSED VITRIFIED CLAY SEWERS PIPE IN VARIOUS LOCATIONS IN BROOKLYN /8502017SE0023C		
Bid/Proposal Response Date	OCTOBER 3, 2017		
Contracting Agency	Department of Design and Construction		
Agency Address	30-30 Thomson Ave. **City** Long Island City **State** NY **Zip Code** 11101		
Contact Person	Emmanuel K. Charles	**Title**	MWBE Compliance Analyst
Telephone #	(718) 391-1450	**Email**	charlesem@ddc.nyc.gov

Project Description *(attach additional pages if necessary)*

PROJECT ID: SEK201BN7

RECONSTRUCTION OF COLLAPSED OR DEFECTIVE SANITARY, STORM OR COMBINED SEWERS VITRIFIED CLAY PIPE IN VARIOUS LOCATIONS IN BROOKLYN

Together With All Work Incidental Thereto
BOROUGH OF BROOKLYN
CITY OF NEW YORK

M/WBE Participation Goals for Services
Enter the percentage amount for each group or for an unspecified goal. Please note that there are no goals for Asian Americans in Professional Services.

Prime Contract Industry: Construction

Group	Percentage	
Unspecified*	7%	
or		
Black American	UNSPECIFIED*	
Hispanic American	UNSPECIFIED*	
Asian American	UNSPECIFIED*	
Women	UNSPECIFIED*	
Total Participation Goals	**7%**	**Line 1**

**Note: For this procurement, individual ethnicity and gender goals are not specified. The Total Participation Goal for construction contracts may be met by using either Black-American, Hispanic-American, Asian American, or Women certified firms or any combination of such firms.*

Tax ID #: 20-0602614 APT E- PIN #: 85018B0005

SCHEDULE B - Part II: M/WBE Participation Plan

Part II to be completed by the bidder/proposer.

Please note: For Non-M/WBE Prime Contractors who will NOT subcontract any services and will self-perform the entire contract, you must obtain a FULL waiver by completing the Waiver Application on pages 17 and 18 and timely submitting it to the contracting agency pursuant to the Notice to Prospective Contractors. Once a FULL WAIVER is granted, it must be included with your bid or proposal and you do not have to complete or submit this form with your bid or proposal.

Section I: Prime Contractor Contact Information

Tax ID #	20-0602614	**FMS Vendor ID #**	0002439050
Business Name	Perfetto Enterprises Co., Inc.	**Contact Person**	Kathy Feretzanis
Address	2074 Richmond Terrace, Staten Island, New York 10302		
Telephone #	718-442-4212	**Email**	kferetzanis@perfettoent.com

Section II: M/WBE Utilization Goal Calculation: Check the applicable box and complete subsection.

PRIME CONTRACTOR ADOPTING AGENCY M/WBE PARTICIPATION GOALS

☒ **For Prime Contractors (including Qualified Joint Ventures and M/WBE firms) adopting Agency M/WBE Participation Goals.**	**Total Bid/Proposal Value**		**Agency Total Participation Goals (Line 1, Page 13)**		**Calculated M/WBE Participation Amount**
Calculate the total dollar value of your total bid that you agree will be awarded to M/WBE subcontractors for services and/or credited to an M/WBE prime contractor or Qualified Joint Venture. Please review the Notice to Prospective Contractors for more information on how to obtain credit for M/WBE participation.	$ 7200000	X	7%	=	$ 504,000 - Line 2

PRIME CONTRACTOR OBTAINED PARTIAL WAIVER APPROVAL: ADOPTING MODIFIED M/WBE PARTICIPATION GOALS

☐ **For Prime Contractors (including Qualified Joint Ventures and M/WBE firms) adopting Modified M/WBE Participation Goals.**	**Total Bid/Proposal Value**		**Adjusted Participation Goal (From Partial Waiver)**		**Calculated M/WBE Participation Amount**
Calculate the total dollar value of your total bid that you agree will be awarded to M/WBE subcontractors for services and/or credited to an M/WBE prime contractor or Qualified Joint Venture. Please review the Notice to Prospective Contractors for more information on how to obtain credit for M/WBE participation.	$	X		=	$ Line 3

Tax ID #: 20-0602614 APT E- PIN #: 85018B0005

Section III: M/WBE Utilization Plan: How Proposer/Bidder Will Fulfill M/WBE Participation Goals. Please review the Notice to Prospective Contractors for more information on how to obtain credit for M/WBE participation. Check applicable box. The Proposer or Bidder will fulfill the M/WBE Participation Goals:

☐ As an M/WBE Prime Contractor that will self-perform and/or subcontract to other M/WBE firms a portion of the contract the value of which is at least the amount located on Lines 2 or 3 above, as applicable. The value of any work subcontracted to non-M/WBE firms will not be credited towards fulfillment of M/WBE Participation Goals. Please check all that apply to Prime Contractor:

☐ MBE ☐ WBE

☐ As a Qualified Joint Venture with an M/WBE partner, in which the value of the M/WBE partner's participation and/or the value of any work subcontracted to other M/WBE firms is at least the amount located on Lines 2 or 3 above, as applicable. The value of any work subcontracted to non M/WBE firms will not be credited towards fulfillment of M/WBE Participation Goals.

☒ As a non M/WBE Prime Contractor that will enter into subcontracts with M/WBE firms the value of which is at least the amount located on Lines 2 or 3 above, as applicable.

Section IV: General Contract Information

What is the expected percentage of the total contract dollar value that you expect to award in subcontracts for services, regardless of M/WBE status? % 7

✓ Scopes of Subcontract Work

Enter brief description of the type(s) and dollar value of subcontracts for all/any services you plan on subcontracting if awarded this contract. For each item, indicate whether the work is designated for participation by MBEs and/or WBEs and the time frame in which such work is scheduled to begin and end. Use additional sheets if necessary.

1. M/WBE FROM INCEPTION TO COMPLETION $504,000.00
2. TRUCKING
3.
4.
5.
6.
7.
8.
9.
10.
11.
12.
13.
14.
15.
16.
17.

Tax ID #: 20-0602614

APT E-PIN #: 885018B0005

Section V: Vendor Certification and Required Affirmations

I hereby:

1) acknowledge my understanding of the M/WBE participation requirements as set forth herein and the pertinent provisions of Section 6-129 of the Administrative Code of the City of New York ("Section 6-129"), and the rules promulgated thereunder;

2) affirm that the information supplied in support of this M/WBE Utilization Plan is true and correct;

3) agree, if awarded this Contract, to comply with the M/WBE participation requirements of this Contract, the pertinent provisions of Section 6-129, and the rules promulgated thereunder, all of which shall be deemed to be material terms of this Contract;

4) agree and affirm that it is a material term of this Contract that the Vendor will award the total dollar value of the M/WBE Participation Goals to certified MBEs and/or WBEs, unless a full waiver is obtained or such goals are modified by the Agency; and

5) agree and affirm, if awarded this Contract, to make all reasonable, good faith efforts to meet the M/WBE Participation Goals, or if a partial waiver is obtained or such goals are modified by the Agency, to meet the modified Participation Goals by soliciting and obtaining the participation of certified MBE and/or WBE firms.

Signature		**Date**	October 2, 2017
Print Name	Claudio Perfetto	**Title**	President

SCHEDULE B – PART III – REQUEST FOR WAIVER OF M/WBE PARTICIPATION REQUIREMENT

Contract Overview

Tax ID # _____ **FMS Vendor ID #** _____

Business Name _____

Contact Name _____ **Telephone #** _____ **Email** _____

Type of Procurement ☐ **Competitive Sealed Bids** ☐ **Other** **Bid/Response Due Date** _____

APT E-PIN # (for this procurement): _____ **Contracting Agency:** _____

M/WBE Participation Goals as described in bid/solicitation documents

_____ % **Agency M/WBE Participation Goal**

Proposed M/WBE Participation Goal *as anticipated by vendor seeking waiver*

_____ % **of the total contract value anticipated in good faith by the bidder/proposer to be subcontracted for services and/or credited to an M/WBE Prime Contractor or Qualified Joint Venture.**

Basis for Waiver Request: *Check appropriate box & explain in detail below (attach additional pages if needed)*

☐ **Vendor does not subcontract services, and has the capacity and good faith intention to perform all such work itself with its own employees.**

☐ **Vendor subcontracts *some* of this type of work but at a *lower* % than bid/solicitation describes, and has the capacity and good faith intention to do so on this contract. (Attach subcontracting plan outlining services that the vendor will self-perform and subcontract to other vendors or consultants.)**

☐ **Vendor has other legitimate business reasons for proposing the M/WBE Participation Goal above. Explain under separate cover.**

References

List 3 most recent contracts performed for NYC agencies (if any). Include information for each subcontract awarded in performance of such contracts. Add more pages if necessary.

CONTRACT NO. _____ **AGENCY** _____ **DATE COMPLETED** _____

Total Contract Amount $ _____ **Total Amount Subcontracted** $ _____

Item of Work Subcontracted and Value of subcontract _____ Item of Work Subcontracted and Value of subcontract _____ Item of Work Subcontracted and Value of subcontract _____

CONTRACT NO. _____ **AGENCY** _____ **DATE COMPLETED** _____

Total Contract Amount $ _____ **Total Amount Subcontracted** $ _____

Item of Work Subcontracted and Value of subcontract _____ Item of Work Subcontracted and Value of subcontract _____ Item of Work Subcontracted and Value of subcontract _____

CONTRACT NO. **AGENCY** **DATE COMPLETED**

Total Contract Amount $ **Total Amount Subcontracted** $

Item of Work Subcontracted and Value of subcontract _____ Item of Work Subcontracted and Value of subcontract _____ Item of Work Subcontracted and Value of subcontract _____

List 3 most recent contracts performed for other entities. Include information for each subcontract awarded in performance of such contracts. Add more pages if necessary.

(Complete ONLY if vendor has performed fewer than 3 New York City contracts.)

TYPE OF Contract _____ **ENTITY** _____ **DATE COMPLETED** _____

Manager at entity that hired vendor (Name/Phone No./Email) _____

Total Contract Amount $ _____ **Total Amount Subcontracted** $ _____

Type of Work Subcontracted _____ _____ _____

_____

TYPE OF Contract _____ **AGENCY/ENTITY** _____ **DATE COMPLETED** _____

Manager at agency/entity that hired vendor (Name/Phone No./Email) _____

Total Contract Amount $ _____ **Total Amount Subcontracted** $ _____

Item of Work Subcontracted and Value of subcontract _____ Item of Work Subcontracted and Value of subcontract _____ Item of Work Subcontracted and Value of subcontract _____

_____

TYPE OF Contract _____ **AGENCY/ENTITY** _____ **DATE COMPLETED** _____

Manager at entity that hired vendor (Name/Phone No./Email) _____

Total Contract Amount $ _____ **Total Amount Subcontracted** $ _____

Item of Work Subcontracted and Value of subcontract _____ Item of Work Subcontracted and Value of subcontract _____ Item of Work Subcontracted and Value of subcontract _____

_____

VENDOR CERTIFICATION: *I hereby affirm that the information supplied in support of this waiver request is true and correct, and that this request is made in good faith.*

Signature: _____ **Date:** _____

Print Name: _____ **Title:** _____

Shaded area below is for agency completion only

AGENCY CHIEF CONTRACTING OFFICER APPROVAL

Signature: _____ **Date:** _____

CITY CHIEF PROCUREMENT OFFICER APPROVAL

Signature: _____ **Date:** _____

Waiver Determination

Full Waiver Approved: ☐
Waiver Denied: ☐
Partial Waiver Approved: ☐
Revised Participation Goal: _____%

APPRENTICESHIP PROGRAM REQUIREMENTS

Bidders are advised that the Apprenticeship Program Requirements set forth below apply to each contract for which a check mark is indicated before the word "Yes". Compliance with these requirements will be determined solely by the City.

___√___ YES _____ NO

(1) Apprenticeship Program Requirements

Notice to Bidders: Please be advised that, pursuant to the authority granted to the City under Labor Law Section 816-b, the Department of Design and Construction hereby requires that the contractor awarded a contract as a result of this Invitation for Bids, and any of its subcontractors with subcontracts worth two million dollars or over, have, prior to entering into such contract or subcontract, apprenticeship agreements appropriate for the type and scope of work to be performed that have been registered with, and approved by, the New York State Commissioner of Labor. In addition, the contractor and its subcontractors will be required to show that such apprenticeship program/s have successfully passed the two year Probation period following the initial registration date of such program/s with the New York State Department of Labor.

The failure to prove, upon request, that these requirements have been met shall result in the contract not being awarded to the contractor or the subcontract not being approved.

Please be further advised that, pursuant to Labor Law Section 220, the allowable ratio of apprentices to journeypersons in any craft classification shall not be greater than the ratio permitted to the contractor as to its workforce on any job under the registered apprenticeship program.

(2) Apprenticeship Program Questionnaire

The bidder must submit a completed and signed Apprenticeship Program Questionnaire. The Questionnaire is set forth on the following page of the Bid Booklet.

APPRENTICESHIP PROGRAM QUESTIONNAIRE ("APQ")

Bidder Name: Perfetto Enterprises Co., Inc.

Project ID Number: SEK201BN7

The Bidder MUST complete, sign, and submit this Apprenticeship Program Questionnaire with its bid.

1. Does the bidder have any Apprenticeship Program agreement(s) appropriate for the type and scope of work to be performed? (Note: Participation may be by either direct sponsorship or through collective bargaining agreement(s).)

   X YES _____ NO

2. Has/have the bidder's Apprenticeship Program agreement(s) been registered with, and approved by the New York State Commissioner of Labor ("NYSDOL Commissioner")?

   X YES _____ NO

3. Has/have the bidder's Apprenticeship Program successfully passed the two-year Probation period following its initial registration with the New York State Department of Labor ("NYSDOL")?

   X YES _____ NO

If the answers to Questions 1, 2, and 3 are "Yes". The bidder shall, in the space below (and/or attached herewith where applicable), provide the contact information for such Apprenticeship Program(s) as well as information demonstrating that such Apprenticeship Program(s) have passed the two-year Probation period following its initial registration with the NYSDOL. (The bidder may attach additional pages if necessary).

- **Where the bidder directly sponsors any such apprenticeship Program(s),** the bidder shall provide the following:
  - The trade classification(s) covered by such program(s), and the date(s) such program(s) was/were approved by the NYSDOL Commissioner; and/or
  - A copy of a letter(s) from the NYSDOL, on NYSDOL's letterhead, executed by an official thereof, which verifies/verify the trade classification(s) covered by such program(s), and the date(s) such program(s) was/were approved by the NYSDOL Commissioner and the Active status of such program(s).

- **Where the bidder participates in any such Apprenticeship Program(s) through its membership in an employer organization(s) that directly sponsors such program(s) or where the employer association(s) participates in such program(s) through collective bargaining,** the bidder shall provide the following:
  - The contact information for the employer organization(s), and the apprenticeable trade(s) covered pursuant to the bidder's affiliation therewith, and the date such program(s) was/were approved by the NYSDOL Commissioner; or
  - A letter(s) from such employer organization(s), on letterhead of such organization(s), executed by an officer, delegate or official thereof, which verifies/verify the trade classification(s) covered by such program(s) was/were approved by the NYSDOL Commissioner, and that the bidder is both a member in good standing of the identified employer organization and is subject to the provisions of the Apprenticeship Program agreement(s) sponsored thereby.

APPRENTICESHIP PROGRAM QUESTIONNAIRE ("APQ")

Project ID Number: SEK201BN7

- **Where the bidder participates in any such Apprenticeship Programs through collective bargaining agreements,** the bidder shall provide the following:
    - The contact information for such collective bargaining entity(ies) and the apprenticeable trade(s) covered pursuant to the bidder's affiliation therewith;
    - A letter(s) from such collective bargaining entity(ies), on letterhead of such entity(ies), executed by an officer, delegate or official thereof, which verifies/verify the bidder's status as a signatory/participant in good standing to such collective bargaining entity(ies) Apprenticeship Program Agreements.

Contractor is a union contractor and member of the General Contractors' Association. (attached)

Contractor hires laborers through local unions; said unions have state approved registered apprenticeship programs.

Bidder: Perfetto Enterprises Co., Inc.

By: _____ Title: President
(Signature of Partner or Corporate Officer)

Date: October 2, 2017

THE GENERAL CONTRACTORS ASSOCIATION OF NEW YORK, INC.

Denise M. Richardson
Executive Director

February 13, 2017

Perfetto Enterprises Company, Inc.
Attn: Mr. Claudio Perfetto
2074 Richmond Terrace
Staten Island, NY 10302

Dear Mr. Perfetto:

Perfetto Enterprises Company, Inc. is a member in good standing of the General Contractors Association of New York ("GCA"). Through your membership in the GCA, you have authorized the GCA to enter into collective bargaining agreements on your behalf.

As such, your firm is signatory to the collective bargaining agreements and participates in, upholds and is subject to all provisions of those agreements, including the union(s) established and approved apprenticeship programs.

The General Contractors Association has collective bargaining agreements with the following unions:

- Laborers International Union of North America
  Local 731, Heavy Construction Laborers
  Local 29 Drillers and Blasters
  Local 147 Tunnel Workers
  Local 1010 Asphalt Pavers
- New York District Council of Carpenters
  Local 1556 Dockbuilders/Timbermen
- International Union of Operating Engineers
  Local 14 / 15 Operating Engineers
  Local 15 C Operating Engineers Mechanics & Helpers
  Local 15 D Surveyors
- International Brotherhood of Teamsters Local 282
- Metallic Lathers Local 46

Please contact me if you require additional information.

Sincerely,

William G. Tyson
Director, Labor Relations

Project ID. SEK201BN7

SAFETY QUESTIONNAIRE

The bidder must include, with its bid, all information requested on this Safety Questionnaire. Failure to provide a completed and signed Safety Questionnaire at the time of bid opening may result in disqualification of the bid as non-responsive.

1. Bidder Information:

Company Name: Perfetto Enterprises Company, Inc

DDC Project Number: SEK201BN7

Company Size: _____ Ten (10) employees or less

x
_____ Greater than ten (10) employees

Company has previously worked for DDC x YES _____ NO

2. Type(s) of Construction Work

TYPE OF WORK	LAST 3 YEARS	THIS PROJECT
General Building Construction		
Residential Building Construction		
Nonresidential Building Construction		
Heavy Construction, except building		
Highway and Street Construction	x	
Heavy Construction, except highways		
Plumbing, Heating, HVAC		
Painting and Paper Hanging		
Electrical Work		
Masonry, Stonework and Plastering		
Carpentry and Floor Work		
Roofing, Siding, and Sheet Metal		
Concrete Work	x	
Specialty Trade Contracting		
Asbestos Abatement		
Other (specify)		
Sewers, Watermains	x	X

3. Experience Modification Rate:

The Experience Modification Rate (EMR) is a rating generated by the National Council of Compensation Insurance (NCCI). This rating is used to determine the contractor's premium for worker's compensation insurance. The contractor may obtain its EMR by contacting its insurance broker or the NCCI. If the contractor cannot obtain its EMR, it must submit a written explanation as to why.

The Contractor must indicate its Intrastate and Interstate EMR for the past three years. [Note: For contractors with less than three years of experience, the EMR will be considered to be 1.00].

YEAR	INTRASTATE RATE	INTERSTATE RATE
2016	1.24	1.24
2015	1.19	1.19
2014	1.19	1.19

If the Intrastate and/or Interstate EMR for any of the past three years is greater than 1.00, the contractor must attach, to this questionnaire, a written explanation for the rating and identify what corrective action was taken to correct the situation resulting in that rating.

4. OSHA Information:

____ YES __x__ NO Contractor has received a willful violation issued by OSHA or New York City Department of Buildings (NYCDOB) within the last three years.

__x__ YES ____ NO Contractor has had an incident requiring OSHA notification within 8 hours (i.e., fatality, or hospitalization of three or more employees).

The Occupational Safety and Health Act (OSHA) of 1970 requires employers with ten or more employees, on a yearly basis to complete and maintain on file the form entitled "Log of Work-related Injuries and Illnesses". This form is commonly referred to as the OSHA 300 Log (OSHA 200 Log for 2001 and earlier).

The OSHA 300 Log must be submitted for the last three years for contractors with more than ten employees.

The Contractor must indicate the total number of hours worked by its employees, as reflected in payroll records for the past three years.

The contractor must submit the Incident Rate for Lost Time Injuries (the Incident Rate) for the past three years. The Incident Rate is calculated in accordance with the formula set forth below. For each given year, the total number of incidents is the total number of non-fatal injuries and illnesses reported on the OSHA 300 Log. The 200,000 hours represents the equivalent of 100 employees working forty hours a week, fifty weeks per year.

$$\text{Incident Rate} = \frac{\text{Total Number of Incidents X 200,000}}{\text{Total Number of Hours Worked by Employees}}$$

YEAR	TOTAL NUMBERS OF HOURS WORKED BY EMPLOYEES	INCIDENT RATE
2016	64,623.00	3.09
2014	71,133.50	0
2015	53,438.50	0

If the contractor's Incident Rate for any of the past three years is one point higher than the Incident Rate for the type of construction it performs (listed below), the contractor must attach, to this questionnaire, a written explanation for the relatively high rate.

General Building Construction	8.5
Residential Building Construction	7.0
Nonresidential Building Construction	10.2
Heavy Construction, except building	8.7
Highway and Street Construction	9.7
Heavy Construction, except highways	8.3
Plumbing, Heating, HVAC	11.3
Painting and Paper Hanging	6.9
Electrical Work	9.5
Masonry, Stonework and Plastering	10.5
Carpentry and Floor Work	12.2
Roofing, Siding, and Sheet Metal	10.3
Concrete Work	8.6
Specialty Trade Contracting	8.6

5. Safety Performance on Previous DDC Project(s)

___ YES __x__ NO Contractor previously audited by the DDC Office of Site Safety.

DDC Project Number(s): _____, _____, _____

___ YES __x__ NO Accident on previous DDC Project(s).

DDC Project Number(s): _____, _____, _____

___ YES __x__ NO Fatality or Life-altering Injury on DDC Project(s) within the last three years. [Examples of a life-altering injury include loss of limb, loss of a sense (e.g., sight, hearing), or loss of neurological function].

DDC Project Number(s): _____, _____, _____

Date: 10/2/17 By: _____

(Signature of Owner, Partner, Corporate Officer)

Title: President

Pre-Award Process

The bidder is advised that as part of the pre-award review of its bid, it may be required to submit the information described in Sections (A) through (D) below. If required, such information must be submitted by the bidder within five (5) business days following receipt of notification from DDC that it is among the low bidders. Such notification from DDC will be by facsimile or in writing and will specify the types of information must be submitted. The types of information the bidder may be required to submit are described below. In the event the bidder fails to submit the required information within the specified time frame, its bid may be rejected as nonresponsive.

****

(A) **Project Reference Form**: If required, the bidder must complete and submit the Project Reference Form set forth on pages 27 through 29 of this Bid Booklet. The Project Reference Form consists of 3 parts: (1) Contracts Completed by the Bidder, (2) Contracts Currently Under Construction by the Bidder, and (3) Pending Contracts Not Yet Started by the Bidder.

(B) **Copy of License**: If required, the bidder must submit a copy of the license under which the bidder will be performing the work. Such license must clearly show the following: (1) Name of the Licensee, (2) License Number, and (3) Expiration date of the License. A copy of the license will be required from bidders for the following contracts: Plumbing Work, Electrical Work and Asbestos Abatement.

(C) **Financial Information**: If required, the bidder must submit the financial information described below:

(1) Audited Financial Statements: Financial statements (Balance Sheet and Income Statement) of the entity submitting the bid, as audited by an independent auditor licensed to practice as a certified public accountant (CPA). Audited financial statements for the three most recent fiscal years must be submitted. Each such financial statement must include the auditor's standard report.

If the bidder does not have audited financial statements, it must submit an affidavit attesting to the fact that the bidder does not have such statements. In addition, the bidder must submit the following documentation covering the three most recent fiscal years: signed federal tax returns, unaudited financial statements, and a "certified review letter" from a certified public accountant (CPA) verifying the unaudited financial statements.

Unless the most recent audited or unaudited financial statement was issued within ninety (90) days, the bidder must submit interim financial information that includes data on financial position and results of operation (income data) for the current fiscal year. Such information may be summarized on a monthly or quarterly basis or at other intervals.

(2) Schedule of Aged Accounts Receivable, including portion due within ninety (90) days.

(D) **Project Specific Information**: If required, the bidder must submit the project specific information described below:

(1) Statement indicating the number of years of experience the bidder has had and in what type of construction.
(2) Resumes of all key personnel to be involved in the project, including the proposed project superintendent.
(3) List of significant pieces of equipment expected to be used for the contract, and whether such equipment is owned or leased.
(4) Description of work expected to be subcontracted, and to what firms, if known.
(5) List of key material suppliers.
(6) Preliminary bar chart time schedule
(7) Contractor's expected means of financing the project. This should be based on the assumption that the contractor is required to finance 2X average monthly billings throughout the contract period.
(8) Any other issues the contractor sees as impacting his ability to complete the project according to the contract.

In addition to the information described in Sections (A) through (D) above, the bidder shall submit such additional information as the Commissioner may require, including without limitation, an explanation or justification for specific unit price items.

The bidder is further advised that it may be required to attend a pre-award meeting with DDC representatives. If such a meeting is convened, the bidder will be advised as to any additional material to be provided.

A. PROJECT REFERENCES – SIMILAR CONTRACTS COMPLETED BY THE BIDDER

List all contracts substantially completed within the last 4 years similar to the contract being awarded, up to a maximum of 10, in descending order of date of substantial completion.

Project & Location	Contract Type	Contract Amount ($000)	Date Completed	Owner Reference & Tel. No.	Architect/Engineer Reference & Tel. No. if different from owner
Contract #: SER002247 Sewers @ Second Court, Staten Island	LS	1,759,721.52	2011	NYC DDC Shakeil Ahmed 718-391-1110	n/a
Contract #: HYDREST01 Installation of curbs, etc. City-wide	Work Order	1,827,250	2012	same	n/a
Contract #: SEK201BN1 Reconstructoin of Collapsed Sewers, B'klyn	Work Order	4,304,976.50	2012	NYC DEP Fathi Husein 718-595-4201	n/a
Contract #: SER00201U Reconstruction of Collapsed Sewers, B'klyn	Work Order	3,938,462.30	2012	same	n/a
Contract #: SEK201BN2 Recon. of Sewers, B'klyn	Work Order	4,392,817.52	2013	NYC DEP Fathi Husein (718)595-4201	n/a
Contract #: SEK201BS2 Recon. of Sewers, B'klyn	Work Order	4,609,126.73	2013	"	"
Contract #: SEK201BS3 Recon of Sewers, B'klyn	Work Order	5,492,061.03	2014	"	"

B. PROJECT REFERENCES – CONTRACTS CURRENTLY UNDER CONSTRUCTION BY THE BIDDER

List all contracts currently under construction even if they are not similar to the contract being awarded.

Project & Location	Contract Type	Contract Amount ($000)	Subcontracted to Others ($000)	Uncompleted Portion ($000)	Date Scheduled to Complete	Owner Reference & Tel. No.	Architect/Engineer Reference & Tel. No. if different from owner
SER00201E S.I.	Work Orders	5,200,000	676,000	2,432,548	May 2018	NYC DEP Jathi Husein 718-595-4184	/
SEK201BS6 Brooklyn	Work Ordas	6,800,000	816,000	6,800,000	August 2018	>>	/
SER200249 Mason Street, SI	LS	5,850,000	585,000	1,495,713	June 2018	NYC DDC Hitendra Patel 646-739-7126	/
SER200277 Forrestal Ct. SI	LS	2,025,000	243,000	2,005,831	July 2018	>>	/

C. PROJECT REFERENCES – PENDING CONTRACTS NOT YET STARTED BY THE BIDDER

List all contracts awarded to or won by the bidder but not yet started.

Project & Location	Contract Type	Contract Amount ($000)	Date Scheduled to Start	Owner Reference & Tel. No.	Architect/Engineer Reference & Tel. No. if different from owner
Contract No: RED-376 Clove Road, SI	LS	7,300,000	TBD	NYC DDC TBD	TBD

VENDEX COMPLIANCE

(A) Vendex Fees: Pursuant to Procurement Policy Board Rule 2-08(f)(2), the contractor will be charged a fee for the administration of the VENDEX system, including the Vendor Name Check process, if a Vendor Name Check review is required to be conducted by the Department of Investigation. The contractor shall also be required to pay the applicable required fees for any of its subcontractors for which Vendor Name Check reviews are required. The fee(s) will be deducted from payments made to the contractor under the contract. For contracts with an estimated value of less than or equal to $1,000,000, the fee will be $175 per Vendor Name Check review. For contracts with an estimated value of greater than $1,000,000, the fee will be $350 per Vendor Name Check review.

(B) Confirmation of Vendex Compliance: The Bidder shall submit this Confirmation of Vendex Compliance to the Department of Design and Construction, Contracts Section, 30-30 Thomson Avenue – First Floor, Long Island City, NY 11101.

Bid Information: The Bidder shall complete the bid information set forth below.

Name of Bidder: Perfetto Enterprises Company, Inc.
Bidder's Address: 2074 Richmond Terrace, Staten Island, New York 10302
Bidder's Telephone Number: 718-442-4212
Bidder's Fax Number: 718-442-4233
Date of Bid Opening: October 3, 2017
Project ID: SEK201BN7

Vendex Compliance: To demonstrate compliance with Vendex requirements, the Bidder shall complete either Section (1) or Section (2) below, whichever applies.

(1) **Submission of Vendex Questionnaires to MOCS:** By signing in the space provided below, the Bidder certifies that as of the date specified below, the Bidder has submitted Vendex Questionnaires to the Mayor's Office of Contract Services, Attn: VENDEX, 253 Broadway, 9th Floor, New York, New York 10007.

Date of Submission: _____

By: _____
(Signature of Partner or corporate officer)

Print Name: _____

(2) **Submission of Certification of No Change to DDC:** By signing in the space provided below, the Bidder certifies that it has read the instructions in a "Vendor's Guide to Vendex" and that such instructions do not require the Bidder to submit Vendex Questionnaires. The Bidder has completed **TWO ORIGINALS** of the Certification of No Change set forth on the next page of this Bid Booklet.

By: _____
(Signature of Partner or corporate officer)

Print Name: Claudio Perfetto, President

(NO TEXT ON THIS PAGE)

Certificate of No Change Form

Mayor's Office of Contract Services

- Please submit two completed forms. Copies will not be accepted.
- Please send both copies to the agency that requested it, unless you are advised to send it directly to the Mayor's Office of Contract Services (MOCS).
- A materially false statement willfully or fraudulently made in connection with this certification, and/or the failure to conduct appropriate due diligence in verifying the information that is the subject of this certification, may result in rendering the submitting entity non-responsible for the purpose of contract award.
- A materially false statement willfully or fraudulently made in connection with this certification may subject the person making the false statement to criminal charges.

I, Claudio Perfetto, being duly sworn, state that I have read
Enter Your Name

and understand all the items contained in the vendor questionnaire and any submission of change as identified on page one of this form and certify that as of this date, these items have not changed. I further certify that, to the best of my knowledge, information and belief, those answers are full, complete, and accurate; and that, to the best of my knowledge, information, and belief, those answers continue to be full, complete, and accurate.

In addition, I further certify on behalf of the submitting vendor that the information contained in the principal questionnaire(s) and any submission of change identified on page two of this form have not changed and have been verified and continue, to the best of my knowledge, to be full, complete and accurate.

I understand that the City of New York will rely on the information supplied in this certification as additional inducement to enter into a contract with the submitting entity.

Vendor Questionnaire *This section is required.*

This refers to the vendor questionnaire(s) submitted for the vendor doing business with the City.

Name of Submitting Entity: Perfetto Enterprises Company, Inc.

Vendor's Address: 2074 Richmond Terrace, Staten Island, NY 10302

Vendor's EIN or TIN: 20-0602614 Requesting Agency: NYC DDC

Are you submitting this Certification as a parent? (Please circle one) Yes No
xxxx

Signature date on the last full vendor questionnaire signed for the submitting vendor: 9/22/17

Signature date on change submission for the submitting vendor: _____

Principal Questionnaire

This section refers to the most recent principal questionnaire submissions.

Mayor's Office of Contract Services

	Principal Name	Date of signature on last full Principal Questionnaire	Date(s) of signature on submission of change
1	Claudio Perfetto	9/22/17	
2			
3			
4			
5			
6			

☐ Check if additional changes were submitted and attach a document with the date of additional submissions.

Certification *This section is required.*

This form must be signed and notarized. Please complete this twice. Copies will not be accepted.

Certified By:

Claudio Perfetto

Name (Print)

President

Title

Perfetto Enterprises Company, Inc.

Name of Submitting Entity

Signature — 10/2/17 *Date*

Notarized By:

Notary Public — Kings *County License Issued* — 01FE6022837 *License Number*

Sworn to before me on: 10/2/17 *Date*

KATHY FERETZANIS
Notary Public, State of New York
No. 01FE6022837
Qualified in Kings County
Commission Expires April 06, 2019

Mayor's Office of Contract Services
253 Broadway, 9th Floor New York, NY 10007
Phone: 212 788 0018 Fax: 212 788 0049

IRAN DIVESTMENT ACT COMPLIANCE RIDER

FOR NEW YORK CITY CONTRACTORS

The Iran Divestment Act of 2012, effective as of April 12, 2012, is codified at State Finance Law ("SFL") §165-a and General Municipal Law ("GML") §103-g. The Iran Divestment Act, with certain exceptions, prohibits municipalities, including the City, from entering into contracts with persons engaged in investment activities in the energy sector of Iran. Pursuant to the terms set forth in SFL §165-a and GML §103-g, a person engages in investment activities in the energy sector of Iran if:

(a) The person provides goods or services of twenty million dollars or more in the energy sector of Iran, including a person that provides oil or liquefied natural gas tankers, or products used to construct or maintain pipelines used to transport oil or liquefied natural gas, for the energy sector of Iran; or

(b) The person is a financial institution that extends twenty million dollars or more in credit to another person, for forty-five days or more, if that person will use the credit to provide goods or services in the energy sector in Iran and is identified on a list created pursuant to paragraph (b) of subdivision three of Section 165-a of the State Finance Law and maintained by the Commissioner of the Office of General Services.

A bid or proposal shall not be considered for award nor shall any award be made where the bidder or proposer fails to submit a signed and verified bidder's certification.

Each bidder or proposer must certify that it is not on the list of entities engaged in investment activities in Iran created pursuant to paragraph (b) of subdivision 3 of Section 165-a of the State Finance Law. In any case where the bidder or proposer cannot certify that they are not on such list, the bidder or proposer shall so state and shall furnish with the bid or proposal a signed statement which sets forth in detail the reasons why such statement cannot be made. The City of New York may award a bid to a bidder who cannot make the certification on a case by case basis if:

(1) The investment activities in Iran were made before the effective date of this section (i.e., April 12, 2012), the investment activities in Iran have not been expanded or renewed after the effective date of this section and the person has adopted, publicized and is implementing a formal plan to cease the investment activities in Iran and to refrain from engaging in any new investments in Iran: or

(2) The City makes a determination that the goods or services are necessary for the City to perform its functions and that, absent such an exemption, the City would be unable to obtain the goods or services for which the contract is offered. Such determination shall be made in writing and shall be a public document.

BIDDER'S CERTIFICATION OF COMPLIANCE WITH IRAN DIVESTMENT ACT

Pursuant to General Municipal Law §103-g, which generally prohibits the City from entering into contracts with persons engaged in investment activities in the energy sector of Iran, the bidder/proposer submits the following certification:

[*Please Check One*]

BIDDER'S CERTIFICATION

[X] By submission of this bid or proposal, each bidder/proposer and each person signing on behalf of any bidder/proposer certifies, and in the case of a joint bid each party thereto certifies as to its own organization, under penalty of perjury, that to the best of its knowledge and belief, that each bidder/proposer is not on the list created pursuant to paragraph (b) of subdivision 3 of Section 165-a of the State Finance Law.

[ ] I am unable to certify that my name and the name of the bidder/proposer does not appear on the list created pursuant to paragraph (b) of subdivision 3 of Section 165-a of the State Finance Law. I have attached a signed statement setting forth in detail why I cannot so certify.

Dated: Staten Island, New York
10/2, 20 17

SIGNATURE

Claudio Perfetto

PRINTED NAME

President

TITLE

Sworn to before me this 2 day of Oct. 20 17

Notary Public

KATHY FERETZANIS
Notary Public, State of New York
No. 01FE6022837
Qualified in Kings County
Commission Expires April 05, 20 19

Dated: October 2, 2017

THE CITY OF NEW YORK
DEPARTMENT OF SMALL BUSINESS SERVICES
DIVISION OF LABOR SERVICES
CONTRACT COMPLIANCE UNIT
110 WILLIAMS STREET
NEW YORK, NEW YORK 10038
PHONE: (212) 513-6323
FAX: (212) 618-8879

CONSTRUCTION

EMPLOYMENT

REPORT

(NO TEXT ON THIS PAGE)

The City of New York
Department of Small Business Services
Division of Labor Services
Contract Compliance Unit
110 William Street
New York, New York 10038
Phone: (212) 513 - 6323
Fax: (212) 618-8879

CONSTRUCTION EMPLOYMENT REPORT INSTRUCTIONS

WHO MUST FILE A CONSTRUCTION EMPLOYMENT REPORT

A Construction Employment Report (ER) must be filed if you meet the following conditions:

CONTRACT FUNDING SOURCE	CONTRACTOR	CONTRACT VALUE	SUBMISSION REQUIREMENT
Federal/Federally assisted	Prime and subcontractors	$10,000 or greater	Construction Employment Report
City and state funded	Prime contractor	$1,000,000 or greater	
	Subcontractor	$750,000 or greater	
		Less than $750,000	Less than $750,000 Certificate (City/State Only)

Prime Contractor:

- A general contractor or construction manager selected to perform work on a construction project funded (in whole or in part) by the federal government with a proposed contract value of $10,000 or more.
- A general contractor or construction manager selected to perform work on a construction project funded or assisted by the City of New York with a proposed contract value of $1,000,000 or more.

Subcontractor:

- A subcontractor selected to perform work on a construction project funded (in whole or in part) by the federal government with a proposed contract value of $10,000 or more.
- A subcontractor selected to perform work on a construction project funded or assisted by the City of New York with a proposed contract value of $750,000 or more.
- A subcontractor selected to perform work on a construction project funded or assisted by the City of New York with a proposed contract value of less than $750,000 must submit a "Less than $750,000" certificate.

WHERE TO FILE

Employment Reports must be filed with the City agency awarding the contract. If you are a contractor or subcontractor who will be working for a private developer in receipt of funding or assistance from the City, the ER must be filed with the City agency with jurisdiction over the developer's project.

DLS REVIEW PROCESS

In accordance with Executive Order 50 (EO 50), upon receipt by DLS of a completed ER, DLS conducts a review of the contractor's current employment policies, practices and procedures, as well as perform a statistical analysis of the contractor's workforce, if necessary. The process is as follows:

1. Within five (5) business days, DLS will review the ER for completeness and accuracy. If any information is omitted or incorrect, or if necessary documents are not submitted, the submission shall be deemed incomplete and DLS will inform the contractor. The substantive compliance review does not commence until the submission is complete. An incomplete submission will delay the review process and may preclude or interrupt the contract approval.

2. If the ER submission is complete, the compliance review will proceed, resulting in one of the following:

   Certificate of Approval
   The contractor is found to be in compliance with all applicable laws and regulations. The approval is valid for 36 months.

   Continued Approval Certificate
   The contractor has been issued a Certificate of Approval in the previous 36 months which is good for the applicable contract.

   Conditional Certificate of Compliance
   The contractor is required to take corrective actions in order to be in compliance with EO 50. The contractor must meet the conditions within one month of the issue of the Conditional Certificate.

   Determination of Nonperformance
   The contractor has failed to take the required corrective actions stipulated in the Conditional Certificate. A determination of nonperformance may prevent a contractor from receiving an award of a contract.

HOW TO COMPLETE THE EMPLOYMENT REPORT

Contents

General Information
Part I: Contractor/Subcontractor Information
Part II: Employment Policies and Practices
Part III: Contract Bid Information and Projected and Current Workforce Forms
Signature Page

PART I: CONTRACTOR/SUBCONTRACTOR INFORMATION

Questions 7 – 11: Please provide the required contact information for your company. All contracts must have a designated Equal Employment Officer.

Question 12: If you are a subcontractor, you must state the name of the contractor for whom you are providing the construction services.

Question 13: Please provide the number of permanent employees in your company.

Question 14a-g: The Project Identification Number (PIN) and the Contract Registration ID Number (CT#) can be obtained from the City agency. Provide a description of the trade work you will perform on this project and the address where the work will be performed. Subcontractors can obtain this information from the contract they have with the prime contractor.

Questions 15 – 18: If your company has received a valid Certificate of Approval within the past 36 months, been audited by the United States Department of Labor, Office of Federal Contract Compliance Programs (OFCCP), or if your company has submitted an ER for a different contract for which you have not yet received a compliance certificate, then you only need to complete and submit the following:

- General Information section
- Part I - Contractor/Subcontractor Information
- Form B - Projected Workforce
- Signature Page

If your company is currently waiting for an approval on another contract previously submitted, be certain to identify the date on which you submitted the completed Employment Report, the name of the City contracting agency with which the contract was made, and the name and telephone number of the person to whom the Employment Report was submitted.

If your company was issued a Conditional Certificate of Approval, all required corrective actions must have been taken or DLS will not issue a Continued Certificate.

Question 18: If the company was audited by the OFCCP, also provide the following:

- Identify the reviewing OFCCP office by its name and address
- If an unconditional certificate of compliance was issued by the OFCCP, attach a copy of the certificate in lieu of completing Parts II and III;
- Include copies of all corrective actions and documentation of OFCCP's performance; and
- Provide a copy of all stated OFCCP findings.

Question 19: Please provide a copy of any Collective Bargaining Agreement(s) which is negotiated through an employer trade association on behalf of your organization or any of its affiliates.

PART II: EMPLOYMENT POLICIES AND PRACTICES

Remember to label all documents with the question number for which they are submitted.

Questions 20a – j: You must respond to the questions as to whether or not your firm has documents reflecting written policies, benefits and procedures. If so, then you must identify by name each document in which the policy(ies), procedure(s) and benefit(s) is located and submit copies of all of the document(s). If your firm follows unwritten practices or procedures, include an explanation of how they operate. Please submit the most current document(s), including all applicable amendments. Label each document and/or unwritten practice according to the question to which it corresponds (e.g. 20a, 20b, etc.)

Questions 21a – h: Inquires about the manner/methods by which you comply with the requirements of the Immigration Reform and Control Act of 1986 (IRCA).

Question 22: Inquires into where and how I-9 forms are maintained and stored.

Questions 23a – e: Inquires into whether or not there is a requirement that an applicant or employee be subjected to a medical examination at any given time. Copes of the medical information questionnaire and instructions must be submitted with the Employment Report.

Question 24: Indicate the existence and location of all statements of your firm's Equal Employment Opportunity policy and attach a copy of each statement.

Question 25: Submit any current Affirmative Action Plan(s) created pursuant to Executive Order 11246.

Question 26: If your firm or collective bargaining agreement has an internal grievance procedure, indicate this and submit a copy of the policy and procedure. If unwritten, explain its nature and operation. Explain how your firm's procedure addresses EEO complaints.

Question 27: If your employees have used the procedure in the last three (3) years, please submit an explanation in the format indicated below:

1. Number of complaint(s)	2. Nature of the complaint(s)	3. Position(s) of the complainant(s)	4. Was an investigation conducted? Y/N	5. Current status of the disposition

Question 28: Indicate whether in the past three (3) years complaints have been filed with a court of law or administrative agency, naming your company as a defendant (or respondent) in a complaint alleging violation of any anti-discrimination or affirmative action laws. If yes, develop and submit a log to show, for each administrative/and or judicial action filed, the following information:

1. Name(s) of complainant(s)	2. Administrative agency or court in which action was filed	3. Nature of the complaint(s)	4. Current status	5. If not pending, the complaint's disposition

Question 29: Identify each job for which a physical qualification exists. Identify and explain the physical qualification(s) for each stated job. Submit job descriptions for each job and the reasons for the qualifications.

Question 30: Identify each job for which there exists any qualification related to age, race, color, national origin, sex, creed, disability, marital status, sexual orientation or citizenship status. Identify and explain the specific related qualification for each job stated. Submit job descriptions for each job and the reasons for the qualifications.

PART III: CONTRACT BID INFORMATION AND PROJECTED AND CURRENT WORKFORCE FORMS

FORM A: CONTRACT BID INFORMATION – USE OF SUBCONTRACTORS/TRADES

Your projections for the utilization of subcontractors on the proposed contract are to be provided in this section. A chart has been provided for the identification of subcontractors. Information is to be provided to the extent known at the time the ER is filed for review by DLS. If the subcontractor's name is unknown, then write "unknown". Under "ownership", enter the appropriate race/ethnic and gender code. If the contract is federally funded or assisted and the subcontractor is being utilized in accordance with applicable federal requirements with respect to Minority Business Enterprise or Woman Business Enterprise requirements, enter the appropriate code. This will also apply to state funded contracts with similar requirements for minority and female owned businesses.

FORM B: PROJECTED WORKFORCE FOR WORK TO BE PERFORMED ON THIS PROJECT

For each trade to be engaged by your company for this project, enter the projected workforce for Males and Females by trade classification in the charts provided.

FORM C: CURRENT WORKFORCE FOR WORK TO BE PERFORMED ON THIS PROJECT

For each trade *currently* engaged by your company for all work performed in NYC, enter the current workforce for Males and Females by trade classification in the charts provided.

SIGNATURE PAGE

The signatory of this Employment Report and all other documents submitted to DLS must be an official authorized to enter into a binding legal agreement. The signature page must be completed in its entirety and notarized. Only original signatures will be accepted.

The City of New York Department of Small Business Services
Division of Labor Services Contract Compliance Unit
110 William Street, New York, New York 10038
Phone: (212) 513 - 6323
Fax: (212) 618-8879

CONSTRUCTION EMPLOYMENT REPORT

GENERAL INFORMATION

1. Your contractual relationship in this contract is: Prime contractor x Subcontractor ___

1a. Are M/WBE goals attached to this project? Yes x No ___

2. Please check one of the following if your firm would like information on how to certify with the City of New York as a:

___Minority Owned Business Enterprise
___Women Owned Business Enterprise
___Disadvantaged Business Enterprise
___Locally Based Business Enterprise
___Emerging Business Enterprise

2a. If you are certified as an **MBE, WBE, LBE, EBE** or **DBE**, what city/state agency are you certified with? _____ Are you DBE certified? Yes ___ No x

3. Please indicate if you would like assistance from SBS in identifying certified M/WBEs for contracting opportunities: Yes___ No x

4. Is this project subject to a project labor agreement? Yes ___ No x

5. Are you a Union contractor? Yes x No ___ If yes, please list which local(s) you affiliated with 731, 1010, 15, 14, etc.

6. Are you a Veteran owned company? Yes ___ No x

PART I: CONTRACTOR/SUBCONTRACTOR INFORMATION

7. 20-0602614 cperfetto@perfettoent.com
Employer Identification Number or Federal Tax I.D. Email Address

8. Perfetto Enterprises Company, Inc.
Company Name

9. 2074 Richmond Terrace, Staten Island, New York 10302
Company Address and Zip Code

10. Claudio Perfetto 718-442-4212
Chief Operating Officer Telephone Number

11. same
Designated Equal Opportunity Compliance Officer (If same as Item #10, write "same") Telephone Number

12. same
Name of Prime Contractor and Contact Person (If same as Item #8, write "same")

20+

13. Number of employees in your company: _____

14. Contract information:

(a) NYC DDC
Contracting Agency (City Agency)

(b) 7200,000.00
Contract Amount

(c) 8502017SE0023C
Procurement Identification Number (PIN)

(d) SEK201BN7
Contract Registration Number (CT#)

(e) tbd
Projected Commencement Date

(f) tbd
Projected Completion Date

(g) Description and location of proposed contract:
Reconstruction of collapsed or defective sanitary , storm or combined sewers ,
vitrified clay pipe, in various locations, in Brooklyn

15. Has your firm been reviewed by the Division of Labor Services (DLS) within the past 36 months and issued a Certificate of Approval? Yes X No___

If yes, attach a copy of certificate.

16. Has DLS within the past month reviewed an Employment Report submission for your company and issued a Conditional Certificate of Approval? Yes___ No X

If yes, attach a copy of certificate.

NOTE: DLS WILL NOT ISSUE A CONTINUED CERTIFICATE OF APPROVAL IN CONNECTION WITH THIS CONTRACT UNLESS THE REQUIRED CORRECTIVE ACTIONS IN PRIOR CONDITIONAL CERTIFICATES OF APPROVAL HAVE BEEN TAKEN.

17. Has an Employment Report already been submitted for a different contract (not covered by this Employment Report) for which you have not yet received compliance certificate?
Yes___ No X If yes,

Date submitted: _____
Agency to which submitted: _____
Name of Agency Person: _____
Contract No: _____
Telephone: _____

18. Has your company in the past 36 months been audited by the United States Department of Labor, Office of Federal Contract Compliance Programs (OFCCP)? Yes___ No X

If yes,

(a) Name and address of OFCCP office.

_____

_____

(b) Was a Certificate of Equal Employment Com pliance issued within the past 36 months? Yes___ No_x_

If yes, attach a copy of such certificate.

(c) Were any corrective actions required or agreed to? Yes___ No_x_

If yes, attach a copy of such requirements or agreements.

(d) Were any deficiencies found? Yes___ No_x_

If yes, attach a copy of such findings.

19. Is your company or its affiliates a member or members of an employers' trade association which is responsible for negotiating collective bargaining agreements (CBA) which affect construction site hiring? Yes_x_ No___ General Contractors' Association

If yes, attach a list of such associations and all applicable CBA's.

PART II: DOCUMENTS REQUIRED

20. For the following policies or practices, attach the relevant documents (e.g., printed booklets, brochures, manuals, memoranda, etc.). If the policy(ies) are unwritten, attach a full explanation of the practices. See instructions.

- _x_ (a) Health benefit coverage/description(s) for all management, nonunion and union employees (whether company or union administered)
- _x_ (b) Disability, life, other insurance coverage/description
- ___ (c) Employee Policy/Handbook
- ___ (d) Personnel Policy/Manual
- ___ (e) Supervisor's Policy/Manual
- _x_ (f) Pension plan or 401k coverage/description for all management, nonunion and union employees, whether company or union administered
- _x_ (g) Collective bargaining agreement(s).
- _x_ (h) Employment Application(s)
- ___ (i) Employee evaluation policy/form(s).
- _x_ (j) Does your firm have medical and/or non-medical (i.e. education, military, personal, pregnancy, child care) leave policy?

21. To comply with the Immigration Reform and Control Act of 1986 when and of whom does your firm require the completion of an I-9 Form?

(a) Prior to job offer	Yes___ No___
(b) After a conditional job offer	Yes___ No___
(c) After a job offer	Yes_x_ No___
(d) Within the first three days on the job	Yes___ No___
(e) To some applicants	Yes___ No___
(f) To all applicants	Yes_x_ No___
(g) To some employees	Yes___ No___
(h) To all employees	Yes___ No___

22. Explain where and how completed I-9 Forms, with their supportive documentation, are maintained and made accessible.
Completed forms are kept in the office in each individual employee's folder.

23. Does your firm or any of its collective bargaining agreements require job applicants to take a medical examination? Yes___ No_x_

If yes, is the medical examination given:

(a) Prior to a job offer	Yes___ No___
(b) After a conditional job offer	Yes___ No___
(c) After a job offer	Yes___ No___
(d) To all applicants	Yes___ No___
(e) Only to some applicants	Yes___ No___

If yes, list for which applicants below and attach copies of all medical examination or questionnaire forms and instructions utilized for these examinations.

24. Do you have a written equal employment opportunity (EEO) policy? Yes_x_ No___

If yes, list the document(s) and page number(s) where these written policies are located.

25. Does the company have a current affirmative action plan(s) (AAP)
_____Minorities and Women
_____Individuals with handicaps
_____Other. Please specify _____

26. Does your firm or collective bargaining agreement(s) have an internal grievance procedure with respect to EEO complaints? Yes_x_ No___ Unions do.

If yes, please attach a copy of this policy.

If no, attach a report detailing your firm's unwritten procedure for handling EEO complaints.

27. Has any employee, within the past three years, filed a complaint pursuant to an internal grievance procedure or with any official of your firm with respect to equal employment opportunity? Yes___ No_x_

If yes, attach an internal complaint log. See instructions.

28. Has your firm, within the past three years, been named as a defendant (or respondent) in any administrative or judicial action where the complainant (plaintiff) alleged violation of any anti-discrimination or affirmative action laws? Yes___ No_x_

If yes, attach a log. See instructions.

29. Are there any jobs for which there are physical qualifications? Yes___ No_x_

If yes, list the job(s), submit a job description and state the reason(s) for the qualification(s).

_____

_____

30. Are there any jobs for which there are age, race, color, national origin, sex, creed, disability, marital status, sexual orientation, or citizenship qualifications? Yes___ No_x_

If yes, list the job(s), submit a job description and state the reason(s) for the qualification(s).

_____

_____

SIGNATURE PAGE

I, (print name of authorized official signing) Claudio Perfetto hereby certify that the information submitted herewith is true and complete to the best of my knowledge and belief and submitted with the understanding that compliance with New York City's equal employment requirements, as contained in Chapter 56 of the City Charter, Executive Order No. 50 (1980), as amended, and the implementing Rules and Regulations, is a contractual obligation. I also agree on behalf of the company to submit a certified copy of payroll records to the Division of Labor Services on a monthly basis.

Perfetto Enterprises Company, Inc.

Contractor's Name

Kathy Feretzanis — Comptroller

Name of person who prepared this Employment Report — Title

Claudio Perfetto — President

Name of official authorized to sign on behalf of the contractor — Title

718-442-4212

Telephone Number



10/1/17

Signature of authorized official — Date

If contractors are found to be underutilizing minorities and females in any given trade based on Chapter 56 Section 3H, the Division of Labor Services reserves the right to request the contractor's workforce data and to implement an employment program.

Contractors who fail to comply with the above mentioned requirements or are found to be in noncompliance may be subject to the withholding of final payment.

Willful or fraudulent falsifications of any data or information submitted herewith may result in the termination of the contract between the City and the bidder or contractor and in disapproval of future contracts for a period of up to five years. Further, such falsification may result in civil and/and or criminal prosecution.

To the extent permitted by law and consistent with the proper discharge of DLS' responsibilities under Charter Chapter 56 of the City Charter and Executive Order No. 50 (1980) and the implementing Rules and Regulations, all information provided by a contractor to DLS shall be confidential.

Only original signatures accepted.

Sworn to before me this 2 day of October 20 17

Kathy Feretzanis

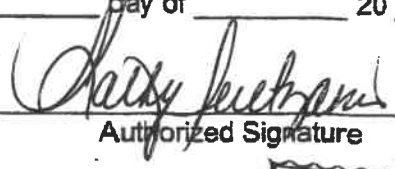

October 2, 2017

Notary Public — Authorized Signature — Date



FOR OFFICIAL USE ONLY: File No. _____

FORM A. CONTRACT BID INFORMATION: USE OF SUBCONTRACTORS/TRADES

1. Do you plan to subcontractor work on this contract? Yes X No___

2. If yes, complete the chart below.

NOTE: All proposed subcontractors with a subcontract in excess of $750,000 must complete an Employment Report for review and approval before the contract may be awarded and work commences.

SUBCONTRACTOR'S NAME*	OWNERSHIP (ENTER APPROPRIATE CODE LETTERS BELOW)	WORK TO BE PERFORMED BY SUBCONTRACTOR	TRADE PROJECTED FOR USE BY SUBCONTRACTOR	PROJECTED DOLLAR VALUE OF SUBCONTRACT
Unknown at this time				

***If subcontractor is presently unknown, please enter the trade (craft name).**

OWNERSHIP CODES
- W: White
- B: Black
- H: Hispanic
- A: Asian
- N: Native American
- F: Female

FORM B: PROJECTED WORKFORCE

TRADE CLASSIFICATION CODES

(J) Journeylevel Workers
(H) Helper
(TOT) Total by Column
(A) Apprentice
(TRN) Trainee

For each trade to be engaged by your company for this project, enter the projected workforce for Males and Females by trade classification on the charts below.

Trade: Laborers

Union Affiliation, if applicable: 731, 1010

Total (Col. #1-10): 12

Total Minority, Male & Female (Col. #2,3,4,5,7,8,9, & 10): 9

Total Female (Col. #6 – 10): 0

	MALES					FEMALES				
	(1) White Non Hisp.	(2) Black Non Hisp.	(3) Hisp.	(4) Asian	(5) Native Amer.	(6) White Non Hisp.	(7) Black Non Hisp.	(8) Hisp.	(9) Asian	(10) Native Amer.
J	3	2	7							
H										
A										
TRN										
TOT	3	2	7							

What are the recruitment sources for you projected hires (i.e., unions, government employment office, job tap center, community outreach)?

Unions

FOR OFFICIAL USE ONLY: File No._____

FORM B: PROJECTED WORKFORCE

Trade:
Operating Engineers

Union Affiliation, if applicable
14/15

Total (Col. #1-10):
3

Total Minority, Male & Female
(Col. #2,3,4,5,7,8,9, & 10):
2

Total Female
(Col. #6 – 10):

MALES

	(1) White Non Hisp.	(2) Black Non Hisp.	(3) Hisp.	(4) Asian	(5) Native Amer.
J	1		2		
H					
A					
TRN					
TOT	1		2		

FEMALES

(6) White Non Hisp.	(7) Black Non Hisp.	(8) Hisp.	(9) Asian	(10) Native Amer.

What are the recruitment sources for you projected hires (i.e., unions, government employment office, job tap center, community outreach)?
Unions

FORM C: CURRENT WORKFORCE

TRADE CLASSIFICATION CODES

(J) Journeylevel Workers
(A) Apprentice
(H) Helper
(TRN) Trainee
(TOT) Total by Column

For each trade currently engaged by your company for all work performed in New York City, enter the current workforce for Males and Females by trade classification on the charts below.

Trade: _____

Union Affiliation, if applicable _____

Total (Col. #1-10): _____

Total Minority, Male & Female (Col. #2,3,4,5,7,8,9, & 10): _____

Total Female (Col. #6 – 10): _____

	MALES					FEMALES				
	(1) White Non Hisp.	(2) Black Non Hisp.	(3) Hisp.	(4) Asian	(5) Native Amer.	(6) White Non Hisp.	(7) Black Non Hisp.	(8) Hisp.	(9) Asian	(10) Native Amer.
J										
H										
A										
TRN										
TOT										

What are the recruitment sources for you projected hires (i.e., unions, government employment office, job tap center, community outreach)?

_____

_____

FOR OFFICIAL USE ONLY: File No._____

FORM C: CURRENT WORKFORCE

Trade: _____

Union Affiliation, if applicable _____

Total (Col. #1-10): _____

Total Minority, Male & Female (Col. #2,3,4,5,7,8,9, & 10): _____

Total Female (Col. #6 – 10): _____

	MALES					FEMALES				
	(1) White Non Hisp.	(2) Black Non Hisp.	(3) Hisp.	(4) Asian	(5) Native Amer.	(6) White Non Hisp.	(7) Black Non Hisp.	(8) Hisp.	(9) Asian	(10) Native Amer.
J										
H										
A										
TRN										
TOT										

What are the recruitment sources for you projected hires (i.e., unions, government employment office, job tap center, community outreach)?

_____

_____

(NO TEXT ON THIS PAGE)

The City of New York Department of Small Business Services
Division of Labor Services Contract Compliance Unit
110 William Street, New York, New York 10038
Phone: (212) 513 - 6323
Fax: (212) 618-8879

CONSTRUCTION EMPLOYMENT REPORT

GENERAL INFORMATION

1. Your contractual relationship in this contract is: Prime contractor____ Subcontractor_x_

1a. Are M/WBE goals attached to this project? Yes ____ No ____

2. Please check one of the following if your firm would like information on how to certify with the City of New York as a:

___Minority Owned Business Enterprise
___Women Owned Business Enterprise
___Disadvantaged Business Enterprise
___Locally Based Business Enterprise
___Emerging Business Enterprise

2a. If you are certified as an **MBE, WBE, LBE, EBE** or **DBE**, what city/state agency are you certified with? _____ Are you DBE certified? Yes ____ No ____

3. Please indicate if you would like assistance from SBS in identifying certified M/WBEs for contracting opportunities: Yes___ No___

4. Is this project subject to a project labor agreement? Yes ____ No ____

5. Are you a Union contractor? Yes ____ No ____ If yes, please list which local(s) you affiliated with _____

6. Are you a Veteran owned company? Yes ____ No ____

PART I: CONTRACTOR/SUBCONTRACTOR INFORMATION

7. _____
Employer Identification Number or Federal Tax I.D. Email Address

8. _____
Company Name

9. _____
Company Address and Zip Code

10. _____
Chief Operating Officer Telephone Number

11. _____
Designated Equal Opportunity Compliance Officer Telephone Number
(If same as Item #10, write "same")

12. _____
Name of Prime Contractor and Contact Person
(If same as Item #8, write "same")

13. Number of employees in your company: _____

14. Contract information:

(a) _____ Contracting Agency (City Agency)

(b) _____ Contract Amount

(c) _____ Procurement Identification Number (PIN)

(d) _____ Contract Registration Number (CT#)

(e) _____ Projected Commencement Date

(f) _____ Projected Completion Date

(g) Description and location of proposed contract:

_____

_____

15. Has your firm been reviewed by the Division of Labor Services (DLS) within the past 36 months and issued a Certificate of Approval? Yes___ No___

If yes, attach a copy of certificate.

16. Has DLS within the past month reviewed an Employment Report submission for your company and issued a Conditional Certificate of Approval? Yes___ No___

If yes, attach a copy of certificate.

NOTE: DLS WILL NOT ISSUE A CONTINUED CERTIFICATE OF APPROVAL IN CONNECTION WITH THIS CONTRACT UNLESS THE REQUIRED CORRECTIVE ACTIONS IN PRIOR CONDITIONAL CERTIFICATES OF APPROVAL HAVE BEEN TAKEN.

17. Has an Employment Report already been submitted for a different contract (not covered by this Employment Report) for which you have not yet received compliance certificate?
Yes___ No___ If yes,

Date submitted: _____
Agency to which submitted: _____
Name of Agency Person: _____
Contract No: _____
Telephone: _____

18. Has your company in the past 36 months been audited by the United States Department of Labor, Office of Federal Contract Compliance Programs (OFCCP)? Yes___ No___

If yes,

(a) Name and address of OFCCP office.

_____

_____

(b) Was a Certificate of Equal Employment Compliance issued within the past 36 months? Yes___ No___

If yes, attach a copy of such certificate.

(c) Were any corrective actions required or agreed to? Yes___ No___

If yes, attach a copy of such requirements or agreements.

(d) Were any deficiencies found? Yes___ No___

If yes, attach a copy of such findings.

19. Is your company or its affiliates a member or members of an employers' trade association which is responsible for negotiating collective bargaining agreements (CBA) which affect construction site hiring? Yes___ No___

If yes, attach a list of such associations and all applicable CBA's.

PART II: DOCUMENTS REQUIRED

20. For the following policies or practices, attach the relevant documents (e.g., printed booklets, brochures, manuals, memoranda, etc.). If the policy(ies) are unwritten, attach a full explanation of the practices. See instructions.

___ (a) Health benefit coverage/description(s) for all management, nonunion and union employees (whether company or union administered)

___ (b) Disability, life, other insurance coverage/description

___ (c) Employee Policy/Handbook

___ (d) Personnel Policy/Manual

___ (e) Supervisor's Policy/Manual

___ (f) Pension plan or 401k coverage/description for all management, nonunion and union employees, whether company or union administered

___ (g) Collective bargaining agreement(s).

___ (h) Employment Application(s)

___ (i) Employee evaluation policy/form(s).

___ (j) Does your firm have medical and/or non-medical (i.e. education, military, personal, pregnancy, child care) leave policy?

21. To comply with the Immigration Reform and Control Act of 1986 when and of whom does your firm require the completion of an I-9 Form?

(a) Prior to job offer	Yes___ No___
(b) After a conditional job offer	Yes___ No___
(c) After a job offer	Yes___ No___
(d) Within the first three days on the job	Yes___ No___
(e) To some applicants	Yes___ No___
(f) To all applicants	Yes___ No___
(g) To some employees	Yes___ No___
(h) To all employees	Yes___ No___

22. Explain where and how completed I-9 Forms, with their supportive documentation, are maintained and made accessible.

_____

_____

23. Does your firm or any of its collective bargaining agreements require job applicants to take a medical examination? Yes___ No___

If yes, is the medical examination given:

(a) Prior to a job offer	Yes___ No___
(b) After a conditional job offer	Yes___ No___
(c) After a job offer	Yes___ No___
(d) To all applicants	Yes___ No___
(e) Only to some applicants	Yes___ No___

If yes, list for which applicants below and attach copies of all medical examination or questionnaire forms and instructions utilized for these examinations.

_____

_____

24. Do you have a written equal employment opportunity (EEO) policy? Yes___ No___

If yes, list the document(s) and page number(s) where these written policies are located.

_____

_____

25. Does the company have a current affirmative action plan(s) (AAP)

_____Minorities and Women

_____Individuals with handicaps

_____Other. Please specify _____

26. Does your firm or collective bargaining agreement(s) have an internal grievance procedure with respect to EEO complaints? Yes___ No___

If yes, please attach a copy of this policy.

If no, attach a report detailing your firm's unwritten procedure for handling EEO complaints.

27. Has any employee, within the past three years, filed a complaint pursuant to an internal grievance procedure or with any official of your firm with respect to equal employment opportunity? Yes___ No___

If yes, attach an internal complaint log. See instructions.

28. Has your firm, within the past three years, been named as a defendant (or respondent) in any administrative or judicial action where the complainant (plaintiff) alleged violation of any anti-discrimination or affirmative action laws? Yes___ No___

If yes, attach a log. See instructions.

29. Are there any jobs for which there are physical qualifications? Yes___ No___

If yes, list the job(s), submit a job description and state the reason(s) for the qualification(s).

_____

_____

30. Are there any jobs for which there are age, race, color, national origin, sex, creed, disability, marital status, sexual orientation, or citizenship qualifications? Yes___ No___

If yes, list the job(s), submit a job description and state the reason(s) for the qualification(s).

_____

_____

SIGNATURE PAGE

I, (print name of authorized official signing)_____ hereby certify that the information submitted herewith is true and complete to the best of my knowledge and belief and submitted with the understanding that compliance with New York City's equal employment requirements, as contained in Chapter 56 of the City Charter, Executive Order No. 50 (1980), as amended, and the implementing Rules and Regulations, is a contractual obligation. I also agree on behalf of the company to submit a certified copy of payroll records to the Division of Labor Services on a monthly basis.

_____

Contractor's Name

_____

Name of person who prepared this Employment Report Title

_____

Name of official authorized to sign on behalf of the contractor Title

_____

Telephone Number

_____

Signature of authorized official Date

If contractors are found to be underutilizing minorities and females in any given trade based on Chapter 56 Section 3H, the Division of Labor Services reserves the right to request the contractor's workforce data and to implement an employment program.

Contractors who fail to comply with the above mentioned requirements or are found to be in noncompliance may be subject to the withholding of final payment.

Willful or fraudulent falsifications of any data or information submitted herewith may result in the termination of the contract between the City and the bidder or contractor and in disapproval of future contracts for a period of up to five years. Further, such falsification may result in civil and/and or criminal prosecution.

To the extent permitted by law and consistent with the proper discharge of DLS' responsibilities under Charter Chapter 56 of the City Charter and Executive Order No. 50 (1980) and the implementing Rules and Regulations, all information provided by a contractor to DLS shall be confidential.

Only original signatures accepted.

Sworn to before me this _____ day of _____ 20 _____

_____

Notary Public Authorized Signature Date

FOR OFFICIAL USE ONLY: File No._____

FORM A. CONTRACT BID INFORMATION: USE OF SUBCONTRACTORS/TRADES

1. Do you plan to subcontractor work on this contract? Yes___ No___

2. If yes, complete the chart below.

NOTE: All proposed subcontractors with a subcontract in excess of $750,000 must complete an Employment Report for review and approval before the contract may be awarded and work commences.

SUBCONTRACTOR'S NAME*	OWNERSHIP (ENTER APPROPRIATE CODE LETTERS BELOW)	WORK TO BE PERFORMED BY SUBCONTRACTOR.	TRADE PROJECTED FOR USE BY SUBCONTRACTOR	PROJECTED DOLLAR VALUE OF SUBCONTRACT

***If subcontractor is presently unknown, please enter the trade (craft name).**

OWNERSHIP CODES
- W: White
- B: Black
- H: Hispanic
- A: Asian
- N: Native American
- F: Female

FORM B: PROJECTED WORKFORCE

TRADE CLASSIFICATION CODES

(J) Journeylevel Workers
(H) Helper
(TOT) Total by Column
(A) Apprentice
(TRN) Trainee

For each trade to be engaged by your company for this project, enter the projected workforce for Males and Females by trade classification on the charts below.

Trade:

_____

Union Affiliation, if applicable

_____

Total (Col. #1-10):

_____

Total Minority, Male & Female (Col. #2,3,4,5,7,8,9, & 10):

_____

Total Female (Col. #6 – 10):

_____

	MALES					FEMALES				
	(1) White Non Hisp.	(2) Black Non Hisp.	(3) Hisp.	(4) Asian	(5) Native Amer.	(6) White Non Hisp.	(7) Black Non Hisp.	(8) Hisp.	(9) Asian	(10) Native Amer.
J										
H										
A										
TRN										
TOT										

What are the recruitment sources for you projected hires (i.e., unions, government employment office, job tap center, community outreach)?

_____

_____

FOR OFFICIAL USE ONLY: File No._____

FORM B: PROJECTED WORKFORCE

Trade:

_____

Union Affiliation, if applicable

_____

Total (Col. #1-10):

_____

Total Minority, Male & Female
(Col. #2,3,4,5,7,8,9, & 10):

_____

Total Female
(Col. #6 – 10):

_____

	MALES					FEMALES				
	(1) White Non Hisp.	(2) Black Non Hisp.	(3) Hisp.	(4) Asian	(5) Native Amer.	(6) White Non Hisp.	(7) Black Non Hisp.	(8) Hisp.	(9) Asian	(10) Native Amer.
J										
H										
A										
TRN										
TOT										

What are the recruitment sources for you projected hires (i.e., unions, government employment office, job tap center, community outreach)?

_____

_____

FORM C: CURRENT WORKFORCE

TRADE CLASSIFICATION CODES

(J) Journeylevel Workers
(A) Apprentice
(H) Helper
(TRN) Trainee
(TOT) Total by Column

For each trade currently engaged by your company for all work performed in New York City, enter the current workforce for Males and Females by trade classification on the charts below.

Trade: _____

Union Affiliation, if applicable _____

Total (Col. #1-10): _____

Total Minority, Male & Female (Col. #2,3,4,5,7,8,9, & 10): _____

Total Female (Col. #6 – 10): _____

	MALES					FEMALES				
	(1) White Non Hisp.	(2) Black Non Hisp.	(3) Hisp.	(4) Asian	(5) Native Amer.	(6) White Non Hisp.	(7) Black Non Hisp.	(8) Hisp.	(9) Asian	(10) Native Amer.
J										
H										
A										
TRN										
TOT										

What are the recruitment sources for you projected hires (i.e., unions, government employment office, job tap center, community outreach)?

_____

_____

FOR OFFICIAL USE ONLY: File No._____

FORM C: CURRENT WORKFORCE

Trade:

_____

Union Affiliation, if applicable

_____

Total (Col. #1-10):

_____

Total Minority, Male & Female
(Col. #2,3,4,5,7,8,9, & 10):

_____

Total Female
(Col. #6 – 10):

_____

	MALES					FEMALES				
	(1) White Non Hisp.	(2) Black Non Hisp.	(3) Hisp.	(4) Asian	(5) Native Amer.	(6) White Non Hisp.	(7) Black Non Hisp.	(8) Hisp.	(9) Asian	(10) Native Amer.
J										
H										
A										
TRN										
TOT										

What are the recruitment sources for you projected hires (i.e., unions, government employment office, job tap center, community outreach)?

_____

_____

(NO TEXT ON THIS PAGE)

The City of New York Department of Small Business Services
Division of Labor Services Contract Compliance Unit
110 William Street, New York, New York 10038
Phone: (212) 513 – 6323 Fax: (212) 618-8879

Date _____ File Number _____

LESS THAN $750,000 SUBCONTRACT CERTIFICATE (CITY, STATE AND ICIP ONLY)

Are you currently certified as one of the following? Please check yes or no:

MBE Yes ___No ___ WBE Yes ___No ___ LBE Yes ___No ___

DBE Yes___No___ EBE Yes ___ No ___

If you are certified as an MBE, WBE, LBE, EBE or DBE, what city/state agency are you certified with?

_____

Please check one of the following if your firm would like information on how to certify with the City of New York as a:

___Minority Owned Business Enterprise ___Locally based Business Enterprise

___Women Owned Business Enterprise ___Emerging Business Enterprise

___Disadvantaged Business Enterprise

_____
Company Name Employer Identification Number or Federal Tax I.D

_____
Company Address and Zip Code

_____
Contact Person (First Name, Last Name) Telephone Number

_____
Fax Number E-mail Address

Description and location of proposed subcontract: _____
_____
_____

Are you a Union contractor? Yes ____ No ____ If yes, please list which local(s) you affiliated with

_____

Are you a Veteran owned company? Yes ____ No ____

_____ _____
Procurement Identification Number (PIN) (City contracts only) Contract Registration Number (CT#) (City contracts only)

Revised 8/13
FOR OFFICIAL USE ONLY: File No._____

Block and Lot Number
(ICIP projects only)

Contract Amount

I, (print name of authorized official signing)_____ hereby certify that I am authorized by the above-named subcontractor to certify that said subcontractor's proposed contract with the above named owner or City agency is less than $750,000. This affirmation is made in accordance with NYC Charter Chapter 56, Executive Order No. 50 (1980) and the implementing Rules.

Willful or fraudulent falsifications of any data or information submitted herewith may result in the termination of the contract between the City and the bidder or contractor and in disapproval of future contracts for a period of up to five years. Further, such falsification may result in civil and/and or criminal prosecution.

Signature of authorized official

Date

Only original signatures accepted.

Sworn to before me this _____ day of _____ 20 _____

Notary Public

Authorized Signature

Date

Revised 8/13
FOR OFFICIAL USE ONLY: File No._____

NYC Small Business Services

careers
businesses
neighborhoods

Gregg Bishop
Commissioner

217CY086

March 3, 2017

Mr. Claudio Perfetto
President
Perfetto Enterprises Company, Inc.
2074 Richmond Terrace
Staten Island, NY 10302

RE: Department of Design & Construction (DDC) Contract;
Pin No. 8502015WM0031C; Replacement of Distribution Water Mains in Clove Road between Mosel Avenue & Lakeview Terrace, etc.; Borough of Staten Island; Contract Value: $7,300,000.00; **Continued Certificate of Approval.**

Dear Mr. Perfetto:

Please be advised that **Perfetto Enterprises Company, Inc.** has already received notice of its approval status for the three (3) year period indicated in the Department of Business Services/Division of Labor Services (DLS) Certificate of Approval dated January 21, 2016 for **File No. 216CY008**.

As your organization continues to meet the equal employment opportunity requirements of the City of New York, DLS approves the awarding of the above-referenced contract. This approval does not extend the initial 3 year approval to **(January 21, 2016 – January 20, 2019)** referred to above.

If you have any questions, please contact Ms. Donna Thompson at **(212) 618–8959** or email at dthompson@sbs.nyc.gov.

Very truly yours,

Helen Wilson
Assistant Commissioner
Division of Labor Services

dt
cc: Nilofer Barkatullah
Donna Thompson
File

Invesco Aim

Transaction Confirmation

Statement Date: 08/07/2009

Account 8499994755 — **AIM INDEPENDENCE 2030 FUND - CLASS C (3630)**
Fund Symbol: TNACX

>00082 5919778 001 008116
PERFETTO ENTERPRISES CO INC
401(K) PLAN
CLAUDIO PERFETTO TRUSTEE
2319 RICHMOND TER
STATEN ISLAND NY 10302-1116

Your Financial Advisor:
FRANK GERARDI
ALLSTATE FINANCIAL SERVICES LLC
1648 RICHMOND RD
STATEN ISLAND NY 10304-2322

Ending Shares:	**501.042**
Net Asset Value:	**$7.54**
Account Value:	**$3,777.86**

For More Information on Your Invesco Aim℠ Account:
- Contact Your Financial Advisor
- Visit us online at www.invescoaim.com
- Call our 24-hour automated information line at 800-AIM-LINE .
- Talk to a Client Services Representative at 800-959-4246 from 7:00 a.m. to 6:00 p.m. CT

Transaction Details

Post Date	Trade Date	Transaction	Dollar Amount	Share Price	Shares this Transaction	Ending Shares
08/07/09	08/07/09	PURCHASE BY ACH [1]	$178.86	$7.54	23.721	501.042

[1] Redemption of these shares may result in a contingent deferred sales charge. See prospectus for details.

Visit our award-winning website at www.invescoaim.com to sign up for Invesco Aim eDelivery to receive statements, compliance documents, and tax form notifications via e-mail. For further information, please call one of our Client Services Representatives from 7:00 A.M. to 6:00 P.M. CST at the toll-free number above.

Important: This account statement reflects financial transactions for the period indicated. Carefully review all of the information to verify the accuracy of the transactions. Please notify us immediately if there is an error. If you fail to notify us of an error within 30 days of this statement, you will be deemed to have ratified each transaction.

00082 5919778 000083 000164 00001/00001

INVESTMENT SLIP

Invesco Aim

INVEST BY MAIL INTO AIM INDEPENDENCE 2030 FUND - CLASS C (3630)
ACCOUNT #8499994755

PERFETTO ENTERPRISES CO INC
401(K) PLAN
CLAUDIO PERFETTO TRUSTEE
2319 RICHMOND TER
STATEN ISLAND NY 10302-1116

Make Check* Payable To Invesco Aim Investment Services And Return To:

Invesco Aim Investment Services, Inc.
PO Box 4739
Houston TX 77210-4739

INVESTMENT AMOUNT
$

☐ **FOR ADDRESS CHANGE, CHECK HERE AND INDICATE CHANGE(S) ON REVERSE SIDE**

*Invesco Aim does **NOT** accept the following types of payment: Cash, Credit Card Checks, and Third Party Checks. We also reserve the right to reject at our sole discretion payments by Temporary / Starter Checks.

0000 084999947559 0003630

APPLICATION FOR EMPLOYMENT

PRE-EMPLOYMENT QUESTIONNAIRE
EQUAL OPPORTUNITY EMPLOYER

PERSONAL INFORMATION

DATE _____

NAME (LAST NAME FIRST)			SOCIAL SECURITY NO. — —
PRESENT ADDRESS	CITY	STATE	ZIP CODE
PERMANENT ADDRESS	CITY	STATE	ZIP CODE
PHONE NO. ( )	REFERRED BY		

EMPLOYMENT DESIRED

POSITION	DATE YOU CAN START	SALARY DESIRED
ARE YOU EMPLOYED? ☐ YES ☐ NO	IF SO, MAY WE INQUIRE OF YOUR PRESENT EMPLOYER? ☐ YES ☐ NO	
EVER APPLIED TO THIS COMPANY BEFORE? ☐ YES ☐ NO	WHERE?	WHEN?

EDUCATION HISTORY

	NAME & LOCATION OF SCHOOL	YEARS ATTENDED	DID YOU GRADUATE?	SUBJECTS STUDIED
GRAMMAR SCHOOL				
HIGH SCHOOL				
COLLEGE				
TRADE, BUSINESS OR CORRESPONDENCE SCHOOL				

GENERAL INFORMATION

SUBJECTS OF SPECIAL STUDY/RESEARCH WORK OR SPECIAL TRAINING/SKILLS	
U.S. MILITARY OR NAVAL SERVICE	RANK

FORMER EMPLOYERS (LIST BELOW LAST FOUR EMPLOYERS, STARTING WITH LAST ONE FIRST)

DATE MONTH AND YEAR	NAME & ADDRESS OF EMPLOYER	SALARY	POSITION	REASON FOR LEAVING
FROM				
TO				
FROM				
TO				
FROM				
TO				
FROM				
TO				



MEMO

To: **All Employees**
From: **Perfetto Enterprises Company, Inc.**
RE: **Office Policy**

- **Perfetto Enterprises has a 90-day trial period in order to evaluate the employee's work performance. Any concerns will be addressed at the time of evaluation.**

- Office personnel should dress appropriately. Please, no sweat attire.

- The office observes the following holidays:

NEW YEARS'S DAY	MEMORIAL DAY
INDEPENDENCE DAY	LABOR DAY
THANKSGIVING DAY	CHRISTMAS DAY

The aforementioned holidays are paid to full time employees who have satisfied the 90 day trial period.

NOTE: If a day is taken off either before or after a holiday, the employee loses pay for the holiday.

- After one year of employment, the employee is eligible for 2 weeks vacation. Vacations must be scheduled 90 days in advance and the 2 weeks cannot be taken consecutively.

- There are 5 personal/sick days offered per year, after the 90-day trial period. The office must be notified at least one week in advance. Furthermore, personal days can be taken 1 every 2 ½ months.

- Lateness will be deducted from pay, unless the employer has been notified in advance that the employee will be late.

NOTE: Unused vacation or personal time can be either carried over to the following year or paid.

- **Employees must give the employer a 4 week termination notice, in order to give the employer ample time to find a suitable replacement. This policy will be strictly adhered to if the employee wishes to be compensated for any vacation and or personal time.**

Department of Design and Construction

INFRASTRUCTURE DIVISION
BUREAU OF DESIGN

VOLUME 1 OF 3

PROJECT ID: SEK201BN7

RECONSTRUCTION OF COLLAPSED OR DEFECTIVE SANITARY, STORM OR COMBINED SEWERS VITRIFIED CLAY PIPE IN VARIOUS LOCATIONS IN BROOKLYN

Together With All Work Incidental Thereto
BOROUGH OF BROOKLYN
CITY OF NEW YORK

_____
Contractor

_____

Dated_____, **20**___

_____

Department of Design and Construction

THE CITY OF NEW YORK
DEPARTMENT OF DESIGN AND CONSTRUCTION
DIVISION OF INFRASTRUCTURE

30-30 THOMSON AVENUE
LONG ISLAND CITY, NEW YORK 11101-3045
TELEPHONE (718) 391-1000
WEBSITE www1.nyc.gov/site/ddc/index.page

VOLUME 2 OF 3

INFORMATION FOR BIDDERS
CONTRACT
PERFORMANCE AND PAYMENT BONDS
PREVAILING WAGE SCHEDULE

FOR FURNISHING ALL LABOR AND MATERIALS NECESSARY AND REQUIRED FOR:

PROJECT ID: SEK201BN7

RECONSTRUCTION OF COLLAPSED OR DEFECTIVE SANITARY, STORM OR COMBINED SEWERS VITRIFIED CLAY PIPE IN VARIOUS LOCATIONS IN BROOKLYN

Together With All Work Incidental Thereto
BOROUGH OF BROOKLYN
CITY OF NEW YORK

FOR THE DEPARTMENT OF ENVIRONMENTAL PROTECTION
PREPARED BY
IN-HOUSE DESIGN

AUGUST 3, 2017

8-007

Department of Design and Construction

THE CITY OF NEW YORK
DEPARTMENT OF DESIGN AND CONSTRUCTION
DIVISION OF INFRASTRUCTURE

30-30 THOMSON AVENUE
LONG ISLAND CITY, NEW YORK 11101-3045
TELEPHONE (718) 391-1000
WEBSITE www1.nyc.gov/site/ddc/index.page

VOLUME 2 OF 3

INFORMATION FOR BIDDERS
CONTRACT
PERFORMANCE AND PAYMENT BONDS
PREVAILING WAGE SCHEDULE

FOR FURNISHING ALL LABOR AND MATERIALS NECESSARY AND REQUIRED FOR:

FOR THE DEPARTMENT OF ENVIRONMENTAL PROTECTION
PREPARED BY
IN-HOUSE DESIGN

AUGUST 3, 2017

NOTICE TO BIDDERS

The City of New York has issued a new Standard Construction Contract. The new Contract, which is incorporated in this bid, is different from the 2013 version previously used by the City. Some of the significant changes are listed below. In addition, this March 2017 version incorporates the Insurance Rider (Articles 22.1.1(c) and 22.3.3), the Paid Sick Leave Law Contract Rider (Article 35.5), and the Hiring and Employment Rider: HireNYC and Reporting Requirements (Article 35.6). This notice is only a partial listing. Please refer to the Contract itself for a full understanding of the changes and the actual text of the changes that were made. The text of the revised Standard Construction Contract is the controlling document if there are any discrepancies between this notice and the Standard Construction Contract.

Significant changes include the following:

- **ARTICLE 11 - DAMAGES CAUSED BY DELAYS:** Article 11 no longer provides for agencies to make determinations on claims for damages for delay or make payments for those claims through a change order. Instead claims will be submitted to the Comptroller in accordance with the standards in the Contract. The revised Article 11 also sets forth additional detail of what delay costs are compensable and how they are to be calculated.

- **ARTICLE 12 - COORDINATION WITH OTHER CONTRACTORS:** The March 2017 version revises Article 12.3 concerning the Engineer's failure to issue directions to an Other Contractor.

- **ARTICLE 14 - COMPLETION AND FINAL ACCEPTANCE OF THE WORK:** The March 2017 version clarifies Article 14.2.2 concerning the dates to complete punch list work.

- **ARTICLE 30 - NOTICE AND DOCUMENTATION OF COSTS AND DAMAGES; PRODUCTION OF FINANCIAL RECORDS:** The March 2017 version clarifies the relationship between the requirements in Article 30.1 concerning when the contractor must submit notice and documentation of claims for delay damages, extra work, and other claims and the requirements that are set forth in Articles 11 and 27.

- **ARTICLE 56 - CLAIMS AND ACTIONS THEREON:** The March 2017 version revises Article 56.2.2 concerning the time to commence an action arising out of the Commissioner's exercise of his/her right to complete punch list or unsatisfactory work.

- **ARTICLE 78 - EXAMINATION AND VIEWING OF SITE, CONSIDERATION OF OTHER SOURCES OF INFORMATION AND CHANGED SITE CONDITIONS:** The March 2017 version adds a new Article 78 requiring pre-bid viewing of the site and allowing the contractor to obtain a change order for extra work due to changed subsurface conditions.

Please discontinue use of this notice after September 30, 2017

(NO TEXT THIS PAGE)

CITY OF NEW YORK

DEPARTMENT OF DESIGN AND CONSTRUCTION DIVISION OF INFRASTRUCTURES

INFORMATION FOR BIDDERS

JUNE 2015

(NO TEXT ON THIS PAGE)

CITY OF NEW YORK CITY
DEPARTMENT OF DESIGN AND CONSTRUCTION
INFORMATION FOR BIDDERS

TABLE OF CONTENTS

SECTION 1.	DESCRIPTION AND LOCATION OF WORK	1
SECTION 2.	TIME AND PLACE FOR RECEIPT OF BIDS	1
SECTION 3.	DEFINITIONS	1
SECTION 4.	INVITATION FOR BIDS AND CONTRACT DOCUMENTS	1
SECTION 5.	PRE-BID CONFERENCE	2
SECTION 6.	AGENCY CONTACT	2
SECTION 7.	BIDDER'S OATH	2
SECTION 8.	EXAMINATION AND VIEWING OF SITE, CONSIDERATION OF OTHER SOURCES OF INFORMATION AND CHANGED CONDITIONS	2
SECTION 9.	EXAMINATION OF PROPOSED CONTRACT	3
SECTION 10.	FORM OF BID	3
SECTION 11.	IRREVOCABILITY OF BID	3
SECTION 12.	ACKNOWLEDGMENT OF AMENDMENTS	4
SECTION 13.	BID SAMPLES AND DESCRIPTIVE LITERATURE	4
SECTION 14.	PROPRIETARY INFORMATION/TRADE SECRETS	4
SECTION 15.	PRE-OPENING MODIFICATION OR WITHDRAWAL OF BIDS	4
SECTION 16.	BID EVALUATION AND AWARD	4
SECTION 17.	LATE BIDS, LATE WITHDRAWALS AND LATE MODIFICATIONS	5
SECTION 18.	WITHDRAWAL OF BIDS.	5
SECTION 19.	MISTAKE IN BIDS	5
SECTION 20.	LOW TIE BIDS	6
SECTION 21.	REJECTION OF BIDS	6
SECTION 22.	RIGHT TO APPEAL DETERMINATIONS OF NON-RESPONSIVENESS OR NON-RESPONSIBILITY AND RIGHT TO PROTEST SOLICITATIONS AND AWARD	7
SECTION 23.	AFFIRMATIVE ACTION AND EQUAL EMPLOYMENT OPPORTUNITY	7
SECTION 24.	VENDEX QUESTIONNAIRES	7
SECTION 25.	COMPLAINTS ABOUT THE BID PROCESS	8
SECTION 26.	BID, PERFORMANCE AND PAYMENT SECURITY	8
SECTION 27.	FAILURE TO EXECUTE CONTRACT	9
SECTION 28.	BIDDER RESPONSIBILITIES AND QUALIFICATIONS	9
SECTION 29.	EMPLOYMENT REPORT	10
SECTION 30.	LABOR LAW REQUIREMENTS	10
SECTION 31.	INSURANCE	10
SECTION 32.	LUMP SUM CONTRACTS	11
SECTION 33.	UNIT PRICE CONTRACTS	11
SECTION 34.	EXCISE TAX	11
SECTION 35.	LICENSES AND PERMITS	11
SECTION 36.	MULTIPLE PRIME CONTRACTORS	11
SECTION 37.	LOCALLY BASED ENTERPRISE REQUIREMENTS (LBE)	12
SECTION 38.	BID SUBMISSION REQUIREMENTS	13
SECTION 39.	COMPTROLLER'SCERTIFICATE	14
SECTION 40.	PROCUREMENT POLICY BOARD RULES	14
SECTION 41.	DDC SAFETY REQUIREMENTS	14

(NO TEXT ON THIS PAGE)

INFORMATION FOR BIDDERS

1. Description and Location of Work

The description and location of the work for which bids are requested are specified in Attachment 1, "Bid Information". Attachment 1 is included as page A-1 of the Bid Booklet.

2. Time and Place for Receipt of Bids

Sealed bids shall be received on or before the date and hour specified in Attachment 1, at which time they will be publicly opened and read aloud in the presence of the Commissioner or his or her representative, and any bidders who may desire to be present.

3. Definitions

The definitions set forth in the Procurement Policy Board Rules shall apply to this Invitation For Bids.

4. Invitation For Bids and Contract Documents

(A) Except for titles, sub-titles, headings, running headlines, tables of contents and indices (all of which are printed herein merely for convenience) the following, except for such portions thereof as may be specifically excluded, shall be deemed to be part of the Contract and the Invitation for Bids.

(1) All provisions required by law to be inserted in this Contract, whether actually inserted or not
(2) The Contract Drawings and Specifications
(3) The General Conditions, the General Requirements and the Special Conditions, if any
(4) The Contract
(5) The Information for Bidders; Request for Proposals; Notice of Solicitation and Proposal For Bids; Bid or Proposal, and, if used, the Bid Booklet
(6) The Budget Director's Certificate; all Addenda issued prior to the receipt of the bids; the Notice of Award; Performance and Payment Bonds, if required; and the Notice to Proceed with the Work.

(B) For particulars as to this procurement, including quantity and quality of the purchase, extent of the work or labor to be performed, delivery and performance schedule, and any other special instructions, prospective bidders are referred to the Invitation For Bids Documents. A copy of such documents can be obtained at the location set forth in Attachment 1.

(C) Deposit for Copy of Invitation For Bids Documents: Prospective bidders may obtain a copy of the Invitation For Bids Documents by complying with the conditions set forth in the Notice of Solicitation. The deposit must be in the form of a check or money order made payable to the City of New York, and drawn upon a state or national bank or trust company, or a check of such bank or trust company signed by a duly authorized officer thereof.

(D) Return of Invitation For Bids Documents: All Invitation For Bids Documents must be returned to the Department upon request. If the bidder elects not to submit a bid thereunder, the

Invitation For Bids Documents shall be returned to the Department, along with a statement that no bid will be submitted.

(E) Return of Deposit: Such deposit will be returned within 30 days after the award of the contract or the rejection of all bids as set forth in the advertisement, provided the Invitation For Bids Documents are returned to the location specified in Attachment 1, in physical condition satisfactory to the Commissioner.

(F) Additional Copies: Additional copies of the Invitation For Bids Documents may be obtained, subject to the conditions set forth in the advertisement for bids.

5. Pre-Bid Conference

A pre-bid conference shall be held as set forth in Attachment 1. Nothing stated at the pre-bid conference shall change the terms or conditions of the Invitation For Bids Documents, unless a change is made by written amendment as provided in Section 9 below. Failure to attend a mandatory pre-bid conference shall constitute grounds for the rejection of the bid.

6. Agency Contact

Any questions or correspondence relating to this bid solicitation shall be addressed to the Agency Contact person specified in Attachment 1.

7. Bidder's Oath

(A) The bid-shall be properly signed by an authorized representative of the bidder and the bid shall be verified by the written oath of the authorized representative who signed the bid, that the several matters stated and information furnished therein are in all aspects true.

(B) A materially false statement willfully or fraudulently made in connection with the bid or any of the forms completed and submitted with the bid may result in the termination of any Contract between the City and the Bidder. As a result, the Bidder may be barred from participating in future City contracts as well as be subject to possible criminal prosecution.

8. Examination and Viewing of Site

(A) Pre-Bidding (Investigation) Viewing of Site -Bidders must carefully view and examine the site of the proposed work, as well as its adjacent area, and seek other usual sources of information, for they will be conclusively presumed to have full knowledge of any and all conditions on, about or above the site relating to or affecting in any way the performance of the work to be done under the Contract which were or should have been indicated to a reasonably prudent bidder. To arrange a date for visiting the work site, bidders are to contact the Agency Contact person specified in Attachment 1.

(B) Should the contractor encounter during the progress of the work subsurface conditions at the site materially differing from any shown on the Contract Drawings or indicated in the Specifications or such subsurface conditions as could not reasonably have been anticipated by the contractor and were not anticipated by the City, which conditions will materially affect the cost of the work to be done under the

Contract, the attention of the Commissioner must be called immediately to such conditions before they are disturbed. The Commissioner shall thereupon promptly investigate the conditions. If he finds that they do so materially differ, or that they could not have been reasonably anticipated by the contractor and were not anticipated by the City, the Contract may be modified with his written approval.

9. Examination of Proposed Contract

(A) Request for Interpretation or Correction: Prospective bidders must examine the Contract Documents carefully and before bidding must request the Commissioner in writing for an interpretation or correction of every patent ambiguity, inconsistency or error therein which should have been discovered by a reasonably prudent bidder. Such interpretation or correction, as well as any additional contract provisions the Commissioner may decide to include, will be issued in writing by the Commissioner as an addendum to the Contract, which will be transmitted to each person recorded as having received a copy of the Contract Documents from the Department. Transmission of such addendum will be by mail, e-mail, facsimile or hand delivery. Such addendum will also be posted at the place where the Contract Documents are available for the inspection of prospective bidders. Upon transmission as provided for herein, such addendum shall become a part of the Contract Documents, and binding on all bidders, whether or not actual notice of such addendum is shown.

(B) Only Commissioner's Interpretation or Correction Binding: Only the written interpretation or correction so given by the Commissioner shall be binding, and prospective bidders are warned that no other officer, agent or employee of the City is authorized to give information concerning, or to explain or interpret, the Contract.

(C) Documents given to a subcontractor for the purpose of soliciting the subcontractor's bid shall include either a copy of the bid cover sheet or a separate information sheet setting forth the project name, the Contract number (if available), the contracting agency and the Project's location.

10. Form of Bid

Each bid must be submitted upon the prescribed form and must contain: a) the name, residence and place of business of the person or persons making the same; b) the names of all persons interested therein, and if no other person is so interested, such fact must be distinctly stated; c) a statement to the effect that it is made without any connection with any other person making a bid for the same purpose and that it is in all respects fair and without collusion or fraud; d) a statement that no Council member or other officer or employee or person whose salary is payable in whole or part from the City Treasury is directly or indirectly interested therein or in the supplies, materials or equipment and work or labor to which it relates, or in any portion of the profits thereof; e) a statement that the bidder is not in arrears to the City or to any agency upon a debt or contract or taxes, and is not a defaulter as surety or otherwise upon any obligation to the City to any agency thereof, except as set forth in the bid.

THE BID SHALL BE TYPEWRITTEN OR WRITTEN LEGIBLY IN INK. THE BID SHALL BE SIGNED IN INK. ERASURES OR ALTERATIONS SHALL BE INITIALED BY THE SIGNER IN INK. FAILURE TO CONFORM TO THE REQUIREMENTS OF THIS SECTION 10 SHALL RESULT IN THE REJECTION OF THE BID.

11. Irrevocability of Bid

The prices set forth in the bid cannot be revoked and shall be effective until the award of the Contract, unless the bid is withdrawn as provided for in Sections 15 and 18 below.

12. Acknowledgment of Amendments

The receipt of any amendment to the Contract Documents shall be acknowledged by the bidder in its bid submission.

13. Bid Samples and Descriptive Literature

Bid samples and descriptive literature shall not be submitted by the bidder, unless expressly requested elsewhere in the Contract or Contract Documents. Any unsolicited bid samples or descriptive literature which are submitted shall not be examined or tested and shall not be deemed to vary any of the provisions of this Contract.

14. Proprietary Information/Trade Secrets

(A) The bidder shall identify those portions of the bid which it deems to be confidential, proprietary information or trade secrets, and provide justification why such materials shall not be disclosed by the City. All such materials shall be clearly indicated by stamping the pages on which such information appears, at the top and bottom thereof with the word "Confidential". Such materials stamped "Confidential" must be easily separable from the non-confidential sections of the bid.

(B) All such materials so indicated shall be reviewed by the Agency and any decision not to honor a request for confidentiality shall be communicated in writing to the bidder. For those bids which are unsuccessful, all such confidential materials shall be returned to the bidder. Prices, makes and model or catalog numbers of the items offered, deliveries, and terms of payment shall be publicly available after bid opening, regardless of any designation of confidentiality made by the bidder.

15. Pre-Opening Modification or Withdrawal of Bids

Bids may be modified or withdrawn by written notice received in the office designated in Attachment 1, before the time and date set for the bid opening. If a bid is withdrawn in accordance with this Section, the bid security, if any, shall be returned to the bidder.

16. Bid Evaluation and Award

In accordance with the New York City Charter, the Procurement Policy Board Rules and the terms and conditions of this Invitation For Bids, this Contract shall be awarded, if at all, to the responsible bidder whose bid meets the requirements and evaluation criteria set forth in the Invitation For Bids, and whose bid price is either the most favorable bid price or, if the Invitation For Bids so states, the most favorable evaluated bid price. A bid may not be evaluated for any requirement or criterion that is not disclosed in the Invitation For Bids.

Restriction: No negotiations with any bidder shall be allowed to take place except under the circumstances and in the manner set forth in Section 21. Nothing in this Section shall be deemed to permit a contract award to a bidder submitting a higher quality item than that designated in the Invitation For Bids, if that bid is not also the most favorable bid.

17. Late Bids, Late Withdrawals and Late Modifications

Any bid received at the place designated in the solicitation after the time and date set for receipt of bids is late and shall not be considered. Any request for withdrawal or modification received at the place designated in the solicitation after the time and date set for receipt of bids is late and shall not be considered. The exception to this provision is that a late modification of a successful bid that makes the bid terms more favorable to the City shall be considered at any time it is received.

18. Withdrawal of Bids.

Except as provided for in Section 15, above, a bidder may not withdraw its bid before the expiration of forty-five (45) days after the date of the opening of bids; thereafter, a bidder may withdraw its bid only in writing and in advance of an actual award. If within sixty (60) days after the execution of the Contract, the Commissioner fails to fix the date for commencement of work by written notice to the bidder, the bidder, at his option, may ask to be relieved of his obligation to perform the work called for by written notice to the Commissioner. If such notice is given to the Commissioner, and the request to withdraw is granted, the bidder waives all claims in connection with this Contract.

19. Mistake in Bids

(A) Mistake Discovered Before Bid Opening: A bidder may correct mistakes discovered before the time and date set for bid opening by withdrawing or correcting the bid as provided in Section 15 above.

(B) Mistakes Discovered Before Award

(1) In accordance with General Municipal Law (Section 103, subdivision .11), where a unilateral error or mistake is discovered in a bid, such bid may be withdrawn upon written approval of the Agency Chief Contracting Officer if the following conditions are met:

(a) The mistake is known or made known to the agency prior to the awarding of the Contract or within 3 days after the opening of the bid, whichever period is shorter; and
(b) The price bid was based upon an error of such magnitude that enforcement would be unconscionable; and
(c) The bid was submitted in good faith and the bidder submits credible evidence that the mistake was a clerical error as opposed to a judgment error; and
(d) The error in the bid is actually due to an unintentional and substantial arithmetic error or an unintentional omission of a substantial quantity of work, labor, material or services made directly in the compilation of the bid, which unintentional arithmetic error or unintentional omission can be clearly shown by objective evidence drawn from inspection of the original work paper, documents, or materials used in the preparation of the bid sought to be withdrawn; and
(e) It is possible to place the agency in the same position as existed prior to the bid.

(2) Unless otherwise required by law, the sole remedy for a bid mistake in accordance with this Article shall be withdrawal of the bid, and the return of the bid bond, or other security, if any, to the bidder. Thereafter, the agency may, in its discretion, award the Contract to the next lowest bidder or rebid the Contract. Any amendment to or reformation of a bid or a Contract to rectify such an error or mistake

therein is strictly prohibited.

(3) If the mistake and the intended correct bid are clearly evident on the face of the bid document, the bid shall be corrected to the intended correct bid and may not be withdrawn. Examples of mistakes that may be corrected are typographical errors, errors in extending unit prices, transposition errors and arithmetical errors.

20. Low Tie Bids

(A) When two or more low responsive bids from responsible bidders are identical in price, meeting all the requirements and criteria set forth in the Invitation For Bids, the Agency Chief Contracting Officer will break the tie in the following manner and order of priority:

(1) Award to a certified New York City small, minority or woman-owned business entity bidder;
(2) Award to a New York City bidder;
(3) Award to a certified New York State small, minority or woman-owned business bidder;
(4) Award to a New York State bidder.

(B) If two or more bidders still remain equally eligible after application of paragraph (A) above, award shall be made by a drawing by lot limited to those bidders. The bidders involved shall be invited to attend the drawing. A witness shall be present to verify the drawing and shall certify the results on the bid tabulation sheet.

21. Rejection of Bids

(A) Rejection of Individual Bids: The Agency may reject a bid if:

(1) The bidder fails to furnish any of the information required pursuant to Section 24 or 28 hereof; or if
(2) The bidder is determined to be not responsible pursuant to the Procurement Policy Board Rules; or if
(3) The bid is determined to be non-responsive pursuant to the Procurement Policy Board Rules; or if
(4) The bid, in the opinion of the Agency Chief Contracting Officer, contains unbalanced bid prices and is thus non-responsive, unless the bidder can show that the prices are not unbalanced for the probable required quantity of items, or if the imbalance is corrected pursuant to Section 15.

(B) Rejection of All Bids: The Agency, upon written approval by the Agency Chief Contracting Officer, may reject all bids and may elect to resolicit bids if in its sole opinion it shall deem it in the best interest of the City so to do.

(C) Rejection of All Bids and Negotiation With All Responsible Bidders: The Agency Head may determine that it is appropriate to cancel the Invitation For Bids after bid opening and before award and to complete the acquisition by negotiation. This determination shall be based on one of the following reasons:

(1) All otherwise acceptable bids received are at unreasonable prices, or only one bid is received and the Agency Chief Contracting Officer cannot determine the reasonableness of the bid price, or no responsive bid has been received from a responsible bidder; or

(2) In the judgment of the Agency Chief Contracting Officer, the bids were not independently arrived at in open competition, were collusive, or were submitted in bad faith.

(D) When the Agency has determined that the Invitation for Bids is to be canceled and that use of negotiation is appropriate to complete the acquisition, the contracting officer may negotiate and award the Contract without issuing a new solicitation, subject to the following conditions:

(1) prior notice of the intention to negotiate and a reasonable opportunity to negotiate have been given by the contracting officer to each responsible bidder that submitted a bid in response to the Invitation for Bids;

(2) the negotiated price is the lowest negotiated price offered by a responsible bidder; and

(3) the negotiated price is lower than the lowest rejected bid price of a responsible bidder that submitted a bid in response to the Invitation for Bids.

22. Right to Appeal Determinations of Non-Responsiveness or Non-Responsibility and Right to Protest Solicitations and Award

The bidder has the right to appeal a determination of non-responsiveness or non-responsibility and has the right to protest a solicitation and award. For further information concerning these rights, the bidder is directed to the Procurement Policy Board Rules.

23. Affirmative Action and Equal Employment Opportunity

This Invitation For Bids is subject to applicable provisions of Federal, State and Local Laws and executive orders requiring affirmative action and equal employment opportunity.

24. VENDEX Questionnaires

(A) Requirement: Pursuant to Administrative Code Section 6-116.2 and the PPB Rules, bidders may be obligated to complete and submit VENDEX Questionnaires. Generally, if this bid is $100,000 or more, or if this bid when added to the sum total of all contracts, concessions and franchises the bidder has received from the City and any subcontracts received from City contractors over the past twelve months, equals or exceeds $100,000, Vendex Questionnaires must be completed. If required, Vendex Questionnaires must be completed and submitted before any award of contract may be made or before approval is given for a proposed subcontractor. Non-compliance with these submission requirements may result in the disqualification of the bid, disapproval of a subcontractor, subsequent withdrawal of approval for the use of an approved subcontractor, or the cancellation of the contract after its award.

(B) Submission: Vendex Questionnaires must be submitted directly to the Mayor's Office of Contract Services, ATTN: Vendex, 253 Broadway, 9th Floor, New York, New York 10007. In addition, the bidder must submit a Confirmation of Vendex Compliance to the agency. A form for this confirmation is set forth in the Bid Booklet.

(C) Obtaining Forms: Vendex Questionnaires, as well as detailed instructions, may be obtained at www.nyc.gov/vendex. The bidder may also obtain Vendex forms and instructions by contacting the

Agency Chief Contracting Office or the contract person for this contract.

25. Complaints About the Bid Process

The New York City Comptroller is charged with the audit of contracts in New York City. Any vendor who believes that there has been unfairness, favoritism or impropriety in the bid process should inform the Comptroller, Office of Contract Administration, One Centre Street, Room 835, New York, New York; telephone number (212)669-2797.

26. Bid, Performance and Payment Security

(A) Bid Security: Each bid must be accompanied by bid security in an amount and type specified in Attachment 1 (page A-1 of the Bid Booklet). The bid security shall assure the City of New York of the adherence of the bidder to its proposal, the execution of the Contract, and the furnishing of Performance and Payment Bonds by the bidder, if required in Attachment 1. Bid security shall be returned to the bidder as follows:

(1) Within ten (10) days after the bid opening, the Comptroller will be notified to return the deposits of all but the three (3) lowest bidders. Within five (5) days after the award, the Comptroller will be notified to return the deposits of the remaining two unsuccessful bidders.
(2) Within five (5) days after the execution of the Contract and acceptance of the Contractor's bonds, the Comptroller will be notified to return the bid security of the successful bidder or, if performance and payment bonds are not required, only after the sum retained under Article 21 of the Contract equals the amount of the bid security.
(3) Where all bids are rejected, the Comptroller will be notified to return the deposit of the three (3) lowest bidders at the time of rejection.

(B) Performance and Payment Security: Performance and Payment Security must be provided in an amount and type specified in Attachment 1 (page A-1 of the Bid Booklet). The performance and payment security shall be delivered by the contractor prior to or at the time of execution of the Contract. If a contractor fails to deliver the required performance and payment security, its bid security shall be enforced, and an award of Contract may be made to the next lowest responsible and responsive bidder, or the contract may be rebid.

(C) Acceptable Types of Security: Acceptable types of security for bids, performance, and payment shall be limited to the following:

(1) a one-time bond in a form satisfactory to the City;
(2) a bank certified check or money order;
(3) obligations of the City of New York; or
(4) other financial instruments as determined by the Office of Construction in consultation with the Comptroller.

Whenever the successful bidder deposits obligations of the City of New York as performance and payment security, the Comptroller may sell and use the proceeds thereof for any purpose for which the principal or surety on such bond would be liable under the terms of the Contract. If the money is deposited with the Comptroller, the successful bidder shall not be entitled to receive interest on such money from the City.

(D) Form of Bonds: Security provided in the form of bonds must be prepared on the form of bonds authorized by the City of New York. Forms for bid, performance, and payment bonds are included in the Invitation for Bids Documents. Such bonds must have as surety thereunder such surety company or companies as are: (I) approved by the City of New York; (2) authorized to do business in the State of New York, and (3) approved by the Department of the Treasury of the United States. Premiums for any required bonds must be included in the base bid.

The bidder is advised that submission of a bid bond where the surety on such bond fails to meet the criteria set forth herein, shall result in the rejection of the bid as non-responsive.

The Department of the Treasury of the United States advises that information concerning approved surety companies may be obtained as follows: (1) from the Government Printing Office at 202-512-1800; (2) through the Internet at http://www.fms.treas.gov/c570/index.html, and (3) through a computerized public bulletin board, which can be accessed by using your computer modem and dialing 202-874-6887.

(E) Power of Attorney: Attorneys in fact who sign bid, performance, or payment bonds must file with each bond a certified copy of their power of attorney to sign said bonds.

27. Failure to Execute Contract

In the event of failure of the successful bidder to execute the Contract and furnish the required security within ten (10) days after notice of the award of the Contract, the deposit of the successful bidder or so much thereof as shall be applicable to the amount of the award made shall be retained by the City, and the successful bidder shall be liable for and hereby agrees to pay on demand the difference between the price bid and the price for which such Contract shall be subsequently awarded, including the cost of any required reletting and less the amount of such deposit. No plea of mistake in such accepted bid shall be available to the bidder for the recovery of the deposit or as a defense to any action based upon such accepted bid. Further, should the bidder's failure to comply with this Section cause any funding agency, body or group (Federal, State, City, Public, Private, etc.) to terminate, cancel or reduce the funding on this project, the bidder in such event shall be liable also to the City for the amount of actual funding withdrawn by such agency on this project, less the amount of the forfeited deposit.

28. Bidder Responsibilities and Qualifications

(A) Bidders must include with their bids all information necessary for a determination of bidder responsibility, as set forth in the Specifications.

(B) The Agency may require any bidder or prospective bidder to furnish all books of account, records, vouchers, statements or other information concerning the bidder's financial status for examination as may be required by the Agency to ascertain the bidder's responsibility and capability to perform the Contract. If required, a bidder must also submit a sworn statement setting forth such information as the Agency may require concerning present and proposed plant and equipment, the personnel and qualifications of his working organizations, prior experience and performance record.

(C) Oral Examination on Qualifications: In addition thereto, and when directed by the Agency, the bidder, or a responsible officer, agent or employee of the bidder, must submit to an oral examination to be conducted by the Agency in relation to his proposed tentative plan and schedule of

operations, and such other matters as the Agency may deem necessary in order to determine the bidder's ability and responsibility to perform the work in accordance with the Contract. Each person so examined must sign and verify a stenographic transcript of such examination noting thereon such corrections as such person may desire to make.

(D) If the bidder fails or refuses to supply any of the documents or information set forth in paragraph (B) hereof or fails to comply with any of the requirements thereof, the Agency may reject the bid.

29. Employment Report

In accordance with Executive Order No. 50 (1980) as modified by Executive Order 108 (1986), the filing of a completed Employment Report (ER) is a requirement of doing business with the City of New York for construction contractors with contracts of $1,000,000 or more and subcontractors with construction subcontracts of $750,000 or more. The required forms and information are included in the Bid Booklet.

30. Labor Law Requirements

(A) General: The successful bidder will be required to comply strictly with all Federal, State and local labor laws and regulations.

(B) New York State Labor Law: This Contract is subject to New York State Labor Law Section 220, which requires that construction workers on the site be paid prevailing wages and supplements. The Contractor is reminded that all wage provisions of this Contract will be enforced strictly and failure to comply will be considered when evaluating performance. Noncompliance may result in the contractor being debarred by the City from future contracts. Complaints filed with the Comptroller may result in decisions which may debar a contractor from bidding contracts with any state governmental entity and other political subdivisions.

(C) Records: The Contractor is expected to submit accurate payroll reports and other required documents and verify attendance and job classifications being utilized in compliance with the law, Contract provisions and agency procedures.

31. Insurance

(A) Bidders are advised that the insurance requirements contained herein are regarded as material terms of the Contract. As required by Article 22 of the Contract, the contractor must effect and maintain with companies licensed and authorized to do business in the State of New York, the types of insurance set forth therein, when required by and in the amounts set forth in Schedule A of the General Conditions. Such required insurance must be provided from the date the contractor is ordered to commence work and up to the date of final acceptance of all required work.

(B) The contractor must, within ten days of receipt of the notice of award, submit the following insurance documentation: (a) original certificate of insurance for general liability in the amount required by Schedule A of the General Conditions, and (b) original certificates of insurance or other proof of coverage for workers' compensation and disability benefits, as required by Section 57 of the New York State Workers' Compensation Law and Section 220 of the Disability Benefits Law.

32. Lump Sum Contracts

(A) Comparison of Bids: Bids on Lump Sum Contracts will be compared on the basis of the lump sum price bid, adjusted for alternate prices bid, if any.

(B) Lump Sum Bids for "General Construction Work" which include excavation shall include all necessary excavation work defined in the Specifications as being included in the lump sum bid. The bidder shall also bid a unit price for the additional cost of excavating material which is defined in the Specifications as excavation for which additional payment will be made. The total estimated additional cost of removing such material will be taken as the quantity set forth in the Engineer's Estimate multiplied by the unit price bid. This total estimated cost of additional excavation shall be added to the lump sum bid for the General Construction Work for the purpose of comparing bids to determine the low bidder.

(C) Variations from Engineer's Estimate: The Engineer's Estimate of the quantity of excavation for which additional payment will be made is approximate only and is given solely to be used as a uniform basis for the comparison of bids and such estimate is not to be considered as part of this contract. The quantities actually required to complete the contract work may be more or less than the quantities in the Engineer's Estimate and, if so, no action for damages or for loss of profits shall accrue to the contractor by reason thereof.

33. Unit Price Contracts

(A) Comparison of Bids: Bids on Unit Price Contracts will be compared on the basis of a total estimated price, arrived at by taking the sum of the estimated quantities of such items, in accordance with the Engineer's Estimate of Quantities set forth in the Bid Schedule, multiplied by the corresponding unit prices, and including any lump sum bids on individual items.

(B) Variations from Engineer's Estimate: Bidders are warned that the Engineer's Estimate of Quantities on the various items of work and materials is approximate only, given solely to be used as a uniform basis for the comparison of bids, and is not be considered part of this contract. The quantities actually required to complete the contract work may be less or more than so estimated, and if so, no action for damages or for loss of profits shall accrue to the contractor by reason thereof.

(C) Overruns: The terms and conditions applicable to overruns of unit price items are set forth in Article 26 of the Contract.

34. Excise Tax

Bidders are referred to the Specifications for information on Federal Excise Tax exemptions.

35. Licenses and Permits

The successful bidder will be required to obtain all necessary licenses and permits necessary to perform the work.

36. Multiple Prime Contractors

If more than one prime contractor will be involved on this project, all contractors are required to examine the Invitation for Bid packages for all other parts of the project.

37. Locally Based Enterprise Requirements (LBE)

This Contract is subject to the requirements of Administrative Code, Section 6-108.1, and the regulations promulgated thereunder. No construction contract will be awarded unless and until these requirements have been complied with in their entirety. The bidder is advised of the provisions set forth below, as well as the provisions with respect to the Locally Based Enterprise Program contained in Article 67 of the Contract. The contractor is advised that:

(A) If any portion of the Contract is subcontracted, not less than ten percent of the total dollar amount of the contract shall be awarded to locally based enterprises ("LBEs"); except, where less than ten percent of the total dollar amount of the Contract is subcontracted, such lesser percentage shall be so awarded.

(B) No contractor shall require performance and payment bonds from LBE subcontractors.

(C) No Contract shall be awarded unless the contractor first identifies in its bid:

(1) the percentage, dollar amount and type of work to be subcontracted; and
(2) the percentage, dollar amount and type of work to be subcontracted to LBEs.

(D) Within ten calendar days after notification of low bid, the apparent low bidder shall submit an "LBE Participation Schedule" to the contracting agency. If such schedule does not identify sufficient LBE subcontractors to meet the requirements of Administrative Code Section 6-108.1, the apparent low bidder shall submit documentation of its good faith efforts to meet such requirements.

(1) The "LBE Participation Schedule" shall include:

(a) the name and address of each LBE that will be given a subcontract,
(b) the percentage, dollar amount and type of work to be subcontracted to the LBE, and
(c) the dates when the LBE subcontract work will commence and end.

(2) The following documents shall be attached to the "LBE Participation Schedule":

(a) verification letters from each subcontractor listed in the "LBE Participation Schedule" stating that the LBE will enter into a formal agreement for work,
(b) certification documents of any proposed LBE subcontractor which is not on the LBE certified list, and
(c) copies of the certification letter of any proposed subcontractor which is an LBE.

(3) Documentation of good faith efforts to achieve the required LBE percentage shall include as appropriate but not limited to the following:

(a) attendance at prebid meetings, when scheduled by the agency, to advise bidders of contract requirements;

(b) advertisement where appropriate in general circulation media, trade association publications and small business media of the specific subcontracts that would be at least equal to the percentage goal for LBE utilization specified by the contractor;

(c) written notification to association of small, minority and women contractors soliciting specific subcontractors;

(d) written notification by certified mail to LBE firms that their interest in the contract is solicited for specific work items and their estimated values;

(e) demonstration of efforts made to select portions of the work for performance by LBE firms in order to increase the likelihood of achieving the stated goal;

(f) documented efforts to negotiate with LBE firms for specific subcontracts, including at a minimum:
(i) The names, address and telephone numbers of LBE firms that are contacted;
(ii) A description of the information provided to LBE firms regarding the plans and specifications for portions of the work to be performed;
(iii) Documentation showing that no reasonable price can be obtained from LBE firms;
(iv) A statement of why agreements with LBE firms were not reached;

(g) a statement of the reason for rejecting any LBE firm which the contractor deemed to be unqualified; and

(h) documentation of efforts made to assist the LBE firms contacted that needed assistance in obtaining required insurance.

(E) Unless otherwise waived by the Commissioner with the approval of the Office of Economic and Financial Opportunity, failure of a proposed contractor to provide the information required by paragraphs (C) and (D) above may render the bid non-responsive and the Contract may not be awarded to the bidder. If the contractor states that it will subcontract a specific portion of the work, but can demonstrate despite good faith efforts it cannot achieve its required LBE percentage for subcontracted work until after award of Contract, the Contract may be awarded, subject to a letter of compliance from the contractor stating that it will comply with Administrative Code Section 6-108.1 and subject to approval by the Commissioner. If the contractor has not met its required LBE percentage prior to award, the contractor shall demonstrate that a good faith effort has been made subsequent to award to obtain LBEs on each subcontract until its meets the required percentage.

(F) When a bidder indicates prior to award that no work will be subcontracted, no work may be subcontracted without the prior written approval of the Commissioner, which shall be granted only if the contractor in good faith seeks LBE subcontractors at least six weeks prior to the start of work.

(G) The contractor may not substitute or change any LBE which was identified prior to award of the contract without the written permission of the Commissioner. The contractor shall make a written application to the Commissioner for permission to make such substitution or change, explaining why the contractor needs to change its LBE subcontractor and how the contractor will meet its LBE subcontracting requirement. Copies of such application must be served on the originally identified LBE by certified mail return receipt requested, as well as the proposed substitute LBE. The Commissioner shall determine whether or not to grant the contractor's request for substitution.

38. Bid Submission Requirements

The following forms, all of which are contained in the Bid Booklet, are to be completed and submitted with the bid:

(1) Bid Schedule and Bid Form, including Affirmation
(2) Bid Security (if required, see Attachment 1 on Page A-1)
(3) M/WBE Subcontactor Utilization Plan (if participation goals have been established)

FAILURE TO SUBMIT ITEMS (1), (2) AND (3)
WILL RESULT IN THE DISQUALIFICATION OF THE BID.

(4) Safety Questionnaire
(5) Construction Employment Report (if bid is $1,000,000 or more)
(6) Contract Certificate (if bid is less than $1,000,000)
(7) Confirmation of Vendex Compliance
(8) Special Experience Requirements (if applicable to this contract)
(9) Apprenticeship Program Questionnaire (if applicable)

FAILURE TO SUBMIT ITEMS (4) THROUGH (9)
MAY RESULT IN THE DISQUALIFICATION OF THE BID.

39. Comptroller's Certificate

This Contract shall not be binding or of any force unless it is registered by the Comptroller in accordance with Section 328 of the City Charter and the Procurement Policy Board Rules. This Contract shall continue in force only after annual appropriation of funds by the City of New York and certification as hereinabove set forth.

40. Procurement Policy Board Rules

This Invitation For Bids is subject to the Rules of the Procurement Policy Board of the City of New York. In the event of a conflict between said Rules and a provision of this Invitation For Bids, the Rules shall take precedence.

41. DDC Safety Requirements

The DDC Safety Requirements apply to the work to be performed pursuant to the Contract. The DDC Safety Requirements are set forth on the following pages.

CITY OF NEW YORK

DEPARTMENT OF DESIGN AND CONSTRUCTION

SAFETY REQUIREMENTS

June 2015

THE DDC SAFETY REQUIREMENTS INCLUDE THE FOLLOWING SECTIONS:

I. **POLICY ON SITE SAFETY**

II. **PURPOSE**

III. **DEFINITIONS**

IV. **RESPONSIBILITIES**

V. **SAFETY QUESTIONNAIRE**

VI. **SAFETY PROGRAM AND SITE SAFETY PLAN**

VII. **KICK-OFF/PRE-CONSTRUCTION MEETINGS AND SAFETY REVIEW**

VIII. **EVALUATION DURING WORK IN PROGRESS**

IX. **SAFETY PERFORMANCE EVALUATION**

I. POLICY ON SITE SAFETY

The City of New York Department of Design and Construction (DDC) is committed to a policy of injury and illness prevention and risk management for construction work that will ensure the safety and health of the workers engaged in the projects and the protection of the general public. Therefore, it is DDC's policy that work carried out by Contractors on DDC jobsites must, at a minimum, comply with applicable federal, state and city laws, rules and regulations, including without limitation:

- U. S. Department of Labor 29 Code of Federal Regulations (CFR) Part 1926 and applicable Sub-parts of Part 1910 – U.S. Occupational Safety and Health Administration (OSHA); New York State Department of Labor Industrial Code Rule 23 – Protection in Construction, Demolition and Excavation;
- New York City Construction Codes, Title 28
- NYC Department of Transportation Title 34 Chapter 2 – Highway Rules
- New York State Department of Labor Industrial Code Rule 16 NYCRR Part 753
- Title 15 of the Rules of the City of New York, Chapter 13 Citywide Construction Dust Mitigation
- Manual on Uniform Traffic Control Devices (MUTCD)
- Title 15 of the Rules of the City of New York, Chapter 28 Citywide Construction Noise Mitigation

II. PURPOSE

The purpose of this policy is to ensure that Contractors perform their work and supervise their employees in accordance with all applicable federal, state and city rules and regulations. Further, Contractors will be expected to minimize or eliminate jobsite and public hazards, through a planning, inspection, auditing and corrective action process. The goal is to control risks so that injuries, illnesses and accidents to contractors' employees, DDC employees and the general public, as well as damage to city-owned and private property, are reduced to the lowest level feasible.

III. DEFINITIONS

Agency Chief Contracting Officer (ACCO): The ACCO shall mean the person delegated authority by the Commissioner to organize and supervise the procurement activity of subordinate Agency staff in conjunction with the CCPO.

Competent Person: As defined by OSHA, an individual who is capable of identifying existing and predictable hazards in the surroundings or working conditions that are unsanitary, hazardous, or dangerous to employees or the general public, and who has authorization to take prompt corrective measures to eliminate them.

Construction Safety Auditor: A representative of the QA&CS Construction Safety Unit who provides inspection and assessment services to enhance health and safety on all DDC construction projects. The activities of the Construction Safety Auditor include performing site surveys, reviewing health and safety plans, reviewing construction permits, and rendering technical advice and assistance to DDC Resident Engineers and Project Managers.

Construction Safety Unit: A part of QA&CS within the Division of Program Management/ Safety & Site Support that assesses contractor safety on DDC jobsites and advises responsible parties of needed corrective actions.

Construction Superintendent: A representative of the contractor responsible for overseeing performance of the required construction work. This individual must engage in sound construction practices, and is responsible to maintain a safe work site. In the case of a project involving the demolition, alteration or new construction of buildings, the Construction Superintendent must be licensed by the NYC Department of Buildings.

Contractor: For purposes of these Safety Requirements, the term "Contractor" shall mean any person or entity that enters into a contract for the performance of construction work on a DDC project. The term "Contractor" shall include any person or entity which enters into any of the following types of contracts: (1) a prime construction contract for a specific project, (2) a prime construction contract using the Job Order Contracting System ("JOCS Contract"), and (3) a subcontract with a CM/Builder ("First Tier Subcontract").

Daily Safety Job Briefing: Daily jobsite safety meetings, giving to all jobsite personnel by contractor, with the purpose of discussing project specific safety procedures for the scheduled construction work.

Director - Quality Assurance and Construction Safety (QA&CS): Responsible for the operations of the QACS Construction Safety Unit and the DDC Site Safety management programs.

Job Hazard Analysis (JHA): A process of identifying the major job steps and any potential site-specific hazards that may be present during construction and establishing the means and methods to eliminate or control those hazards.

Qualified Person: As defined by OSHA, an individual who, by possession of a recognized degree, certificate, license or professional standing, or who by extensive knowledge, training, and experience, has successfully demonstrated his or her ability to solve problems relating to the subject matter, the work, or the project. Qualified Persons are required under regulation to address issues pertaining, but without limit, to fall protection, scaffold design and trenching and shoring, among others.

Project Site: Those areas indicated in the Contract Documents where the Work is to be performed.

Project Safety Representative: The designated project safety representative shall have completed an authorized 30 hour OSHA Construction Safety Course and other safety training applicable to Contractor's/subcontractor's project work. Except in instances where a dedicated Project Safety Manager is required, a Project Safety Representative may also function as a superintendent, foreman or crew leader on the Project, but must have sufficient experience and authority to undertake corrective actions and must qualify to be a competent person. No work is to be performed on site when a Project Safety Representative is not present.

Project Safety Manager: A dedicated, full-time project safety manager may be a contractual requirement on large projects or projects deemed by DDC to be particularly high risk. This would be in addition or in lieu of a Contractor's Project Safety Representative. This individual shall not have any other assigned duties. This individual shall have received, at a minimum an authorized 30 hour OSHA Construction Safety Course. Other examples of acceptable training are OSHA Safety and Health Standards for the Construction Industry training program (OSHA 510), Certified Safety Professional (CSP), Certified Industrial Hygienist (CIH) or a degree/certificate in a safety and health from a college-level curriculum.
A Project Safety Manager shall possess the additional training, years of experience, and skills necessary to thoroughly understand the health and safety hazards and controls for large construction projects, including the full scope of the specific Work.

QA&CS – Quality Assurance and Construction Safety of the New York City Department of Design and Construction.

Resident Engineer (RE) / Construction Project Manager (CPM): Representative of the Commissioner duly designated by the Commissioner to be his/her representative at the site of the work. (The RE/CPM may be a third-party consultant, including a Construction Management firm, retained by DDC)

Safety Program: Established by the Contractor that covers all operations of that Contractor and establishes the Contractor's overall safety policy, regulatory compliance plan and minimum safety standards. The Safety Program must be submitted prior to the commencement of work at the site and is subject to review and acceptance by the Construction Safety Unit.

Safety Questionnaire: Used by DDC to evaluate Contractor's current and past safety performance. It is required to be completed by all Contractors initially when submitting bids for Construction work, or when being pre-qualified and updated annually or as requested by the DDC.

Site Safety Manager: For certain projects, as defined in NYC Construction Codes – Title 28, the Contractor shall provide a Site Safety Manager with a Site Safety Manager License issued by the NYC Department of Building.

Site Safety Plan: A site-specific safety plan developed by the Contractor for a specific project. The Site Safety Plan must identify hazards associated with the project, and include specific safety procedures and training appropriate and necessary to complete the work. The Site Safety Plan must be submitted prior to the commencement of work at the site and is subject to review and acceptance by the Construction Safety Unit.

Unsafe or Unhealthy Condition: A condition that could be potentially hazardous to the health and safety of personnel or the public, and/or damaging to equipment, machinery, property or the environment.

Weekly Safety Meetings: Weekly documented jobsite safety meetings, given to all jobsite personnel by contractor, with the purpose of discussing general safety topics and job specific requirements encountered at the DDC work site.

Work: The construction required by the Contract Documents whether completed or partially completed, performed by the Contractor/ subcontractors. Work refers to the furnishing of labor, furnishing and incorporating materials and equipment into the construction and providing any service required by the Contract Documents to fulfill the Contractor's obligation to complete the Project.

IV. RESPONSIBILITIES

All persons who manage, perform, and provide support for construction projects shall conduct operations in compliance with the requirements identified in this Policy and all applicable governing regulatory agency requirements and guidelines pertaining to safety in construction.

A. DDC or CM Resident Engineer / Construction Project Manager

- Monitors the issuance of safety- related permits, approvals and drawings and maintains copies on site.
- Monitors construction-related work activities to confirm that they are conducted in accordance with DDC policies and all applicable regulations that pertain to construction safety.
- Maintains documentation and periodically attends weekly safety meetings and daily safety job briefings.
- Notifies the Construction Safety Unit and the ACCO's Insurance and Risk Management Unit of project- related accidents and emergencies, as per DDC's Construction Safety Emergency and Accident Notification and Response Protocol.
- Gathers facts related to all accidents and prepares DDC Construction Accident Report.

- Notifies the Construction Safety Unit within two (2) hours of the start of an inspection by any outside regulatory agency personnel, including OSHA, NYC DOB or others and forwards a copy of the inspection report within three days of its receipt.
- Monitors the conditions at the site for conformance with the contractor's Site Safety Plan and DDC construction documents.
- Notifies the contractor and DDC in the event that any condition or activity exists that is not in compliance with the contractor's Site Safety Plan, applicable federal, state or local codes or any condition that presents a potential risk of injury to the public or workers or possible damage to property.
- Notifies DDC of any unsafe or unhealthy condition and directs the contractor to provide such labor, materials, equipment and supervision to abate such conditions.
- Escort and assist QA&CS Construction Safety Auditors during the field and record inspections.
- Reports emergency conditions to the Construction Safety Unit immediately.

B. Contractors

- Submit a completed Safety Questionnaire and other safety performance related documentation with its bid or as part of a pre-qualification package.
- Complete a written Job Hazard Analysis (JHA) that identifies safety hazards for project specific work tasks and hazard control methods. A written JHA shall be available at the site for reference and included in the Site Safety Plan submitted by the contractor.
- Submit a Site Safety Plan and Safety Program within 30 days from the Award Date or as otherwise directed. The Site Safety Plan and Safety Program are subject to review and acceptance by the Construction Safety Unit prior to the commencement of work at the site. The Site Safety Plan shall be revised and updated as necessary.
- Develop project specific safety procedures to protect general public during all construction activities for the duration of the project.
- Ensure that all employees are aware of the hazards associated with the project through documented formal and informal training and/or other communications. Conduct and document weekly safety meetings and daily job briefing sessions for the duration of the project. Documentation to be provided to the RE/CPM on a monthly basis.
- Name the Project Safety Representative and Project Safety Manager, if required. The Contractor will be required to identify the Project Safety Representative and Project Safety Manager in the Site Safety Plan. Resumes, outlining the qualification and experience for the Project Safety Representative and Project Safety Manager, shall be available upon request. DDC reserves the right to request that the Contractor replace any Project Safety Representative or Project Safety Manager for any reason at any time during the project.
- Name a Competent Person(s), The Contractor will be required to identify a Competent Person(s) in the Site Safety Plan.
- Comply with all mandated federal, state and local safety and health rules and regulations.
- Comply with all provisions of the Site Safety Plan.
- Conduct applicable safety training prior to the commencement of work at the site. All training records (OSHA 10-hour, flagger, scaffold, fall protection, confined space entry, etc.) shall be provided to the RE/CPM prior to mobilization, included in the Site Safety Plan, kept current during the course of the project, and available for review. Prior to performing any work on DDC project all employees shall have successfully completed, within the previous five calendar years, a 10 Hour OSHA construction safety course.
- As part of the Site Safety Plan, prepare a site specific programs and plans, such as MPT plan, steel erection plan, confined space program, fall protection plan, demolition plan, etc. (if not otherwise provided in the contract documents) and comply with all of its provisions.
- Conduct and document site-specific safety orientation for Contractor personnel to review the hazards associated with the project as identified in the Site Safety Plan and the specific safety procedures and

controls that will be used to protect workers, the general public and property. The Project Safety Representative and/or Project Safety Manager will conduct this training prior to mobilization and provide documentation to the RE/CPM.

- Provide, replace and adequately maintain at or around the project site, suitable and sufficient signage, lights, barricades and enclosures (fences, sidewalk sheds, netting, bracing, etc.).
- Report unsafe or unhealthy conditions to the RE/CPM as soon as practical, but no more than 24 hours after discovery, and take prompt actions to remove or abate such conditions.
- Report any accidents involving injuries to workers or the general public, as well as property damage, to the RE/CPM within one (1) hour.
- Following an accident, the Contractor shall not remove or alter any equipment, structure, material, or evidence related to the accident. Exception: Immediate emergency procedures taken to secure structures, temporary construction, operations, or equipment that pose a continued imminent danger or facilitate assistance for persons who are trapped or who have sustained bodily injury.
- Notify the RE/CPM within one (1) hour of the start of an inspection by any outside regulatory agency personnel, including OSHA, NYC DOB or others.
- Maintain all records pertaining to all required compliance documents and accident and injury reports.
- Address DDC recommendations on safety, which shall in no way relieve the Contractor of its responsibilities for safety on the project. The Contractor has sole responsibility for safety.

V. SAFETY QUESTIONNAIRE

DDC requires that all Contractors provide information regarding their current and past safety performance and programs. This will be accomplished by the use of the DDC Safety Questionnaire. As a part of the bid submittal package, the contractor must submit a completed DDC Safety Questionnaire listing company workers' compensation experience modification rating and OSHA Incident Rates for the three (3) years prior to the date of the bid opening. DDC may request a Contractor to update its Questionnaire at any time or to provide more detailed information. The Contractor must provide the requested information within 15 days.

The following criteria will be used by DDC in reviewing the Contractor's responsibility, which will be based on the information provided on the questionnaire:

Criteria 1: OSHA Injury and Illness Rates (I&IR) are no greater than the average for the industry (based on the most current Bureau of Labor Statistics data for the Contractors SIC code); and

Criteria 2: Insurance workers compensation Experience Modification Rate (EMR) equal to or less than 1.0; and

Criteria 3: Any willful violations issued by OSHA or NYC DOB within the last three (3) years; and

Criteria 4: A fatality (worker or member of public) and injuries, requiring OSHA notification, experienced on or near Contractor's worksite within the last three (3) years; and

Criteria 5: Past safety performance on DDC projects (accidents; status of safety program and site safety plan submittals; etc.)

Criteria 6: OSHA violation history for the last three (3) years;

Criteria 7: Contractor shall provide OSHA Injury and Illness Records (currently OSHA 300 and 300A Logs) for the last three (3) years.

If the Contractor fails to meet the basic criteria listed above, the Construction Safety Unit may request, through the ACCO, more details concerning the Contractor's safety experience. DDC may request the Contractor to provide copies of, among other things, accident investigation reports, OSHA records, OSHA and NYC DOB citations, EPA citations and written corrective action plan.

VI. SAFETY PROGRAM AND SITE SAFETY PLAN

Within thirty (30) days from the Award Date, or as otherwise directed, the Contractor shall submit the following: (1) Safety Program, and (2) Site Safety Plan. The Safety Program shall set forth the Contractor's overall safety policy, regulatory compliance plan and minimum safety standards. The Site Safety Plan shall identify project work scope, safety hazards associated with the project tasks, and include specific safety procedures and training appropriate and necessary to complete the work. The Safety Program and the Site Safety Plan are subject to review and acceptance by the Construction Safety Unit prior to the commencement of work at the site. Failure by the Contractor to submit an acceptable Site Safety Plan and Safety Program shall be grounds for default.

Safety Program: Corporate Safety Program established by the Contractor that includes the Contractor's overall safety policy, regulatory compliance plan and basic safety procedures covering all aspects of construction operations, performed by the Contractor. The Safety Program shall be a written document with a separate section describing each element of the Safety Program. The Safety Program shall have at minimum the following elements applicable to the Contractor's operations:

- Responsibility and Organization – Contractor's company organization chart, including titles, names, contact information, roles and responsibilities for key personnel, etc.
- Safety Training Program – Contractor's corporate training program.
- Hazard Corrective Actions – Criteria for safety inspections, identification of safety non-compliances, implementation and verification of corrective actions, forms to document safety inspections results, etc.
- Accident/Exposure Investigation
- Recordkeeping and Reporting Injuries – Responsible staff; reporting and recording criteria; OSHA 300 and 300A form completion, etc.
- Fire Protection and Prevention Program
- Housekeeping
- Illumination
- Sanitation
- Personal Protective Equipment (PPE) – Company policy for the use of head protection, foot protection, hearing protection, eye and face protection, protective clothing, and any additional protective equipment based on work tasks; PPE inspection and replacement policy.
- Hazard Communication Program
- Employee Emergency Action Plan
- Protection of Underground Facilities and Utilities
- Ionizing/Nonionizing Radiation
- Material Handling, Storage, Use and Disposal
- Tools – Hand and Power
- Signs, Signals, and Barricades
- Scaffold – Local Law 52 requirements, installation, use, inspection, dismantling, training and general safety requirements.
- Welding and Cutting
- Electrical Safety
- Fall Protection
- Cranes, Derrick, Hoists, Elevators, Conveyors
- Excavation Safety
- Concrete and Masonry Construction
- Maintenance and Protection of Traffic
- Steel Erection
- Demolition
- Blasting and the Use of Explosives
- Stairways and Ladders

- Toxic and Hazardous Substances
- Alcohol and Drug Abuse Policy
- Rodents and Vermin
- Occupational Noise Exposure
- Confined Space Program – General confined Space Program: training requirements, confined space hazard evaluation procedure, atmospheric testing procedure, confined space classification, permit-required procedure, communication procedure, rescue procedure, forms, etc.
- Construction Vehicles/Heavy Equipment
- Dust Control Procedures

Site Safety Plan: The Site Safety Plan shall be a written document and shall apply to all project specific Contractor and subcontractor operations, and shall have at a minimum, the following elements with each element described in a separate section (It may be necessary to modify the basic format for certain unique or high-risk projects, such as tunnels or high-rise construction):

- Project Work Scope – Detailed information regarding work tasks that will be performed by contractor and subcontractors under the project.
- Responsibility and Organization – Contractor's organization chart with responsible staff for the project, including titles, names, contact information, roles and responsibilities.
- Safety Training and Education – OSHA 10 Hours training, requirements for daily safety briefings and weekly safety meetings, any work task specific training, responsible staff for implementation of training program for the project.
- Job Hazard Analysis (JHA) – Project specific Job Hazard Analysis including work tasks, identified hazards, hazard control methods (administrative, engineering, PPE), contractor's name, project id, location, name and signature of a certifying person, hazard assessment date.
- Protection of Public
- Hazard Corrective Actions – Responsible staff, forms, frequency of safety inspections and implementation of corrective actions.
- Accident/Exposure Investigation – Accident/incident notification procedure of DDC project staff. Project specific procedures for accident investigation and implementation of corrective actions.
- First Aid and Medical Attention – Responsible staff, location and inspection of First Aid kit, directions to local hospitals; emergency telephone numbers.
- Project Specific Fire Protection and Prevention Program.
- Project Specific Illumination Procedure.
- Project Specific Sanitation Procedure.
- Personal Protective Equipment (PPE)
- Hazard Communication Program – Responsible staff; training; SDS records, project specific list of chemical; location of the program and SDS records.
- Means of Egress – Information regarding free and unobstructed egress from all parts of the building or structure; exit marking; maintenance of means of egress, etc.
- Employee Emergency Action Plan – Project specific: responsible staff, emergency alarm system, evacuation procedure, procedure to account for employees after evacuation, etc.
- Evacuation Plan – Project specific evacuation plan (drawing/scheme) with exists and evacuation routes.
- Protection of Underground Facilities and Utilities, including responsible staff.
- Ionizing/Nonionizing Radiation – Competent person, license and qualification requirements, type of radiation, employees exposure and protection, etc.
- Material Handling, Storage, Use and Disposal – Project specific information regarding material storage and disposal.
- Signs, Signals, and Barricades – Use of danger/warning signs, sidewalk closure, safety instruction signs, pedestrian fencing and barricades, etc.
- Scaffold – Project specific scaffold types, training, scaffold drawings, competent person, criteria for project specific scaffold, falling object protection.

- Welding and Cutting – project specific procedure for welding and cutting, including all necessary safety requirements such as fire prevention, personal protective equipment, hot work permits, FDNY certificate requirements.
- Fall Protection – Project specific information regarding selected fall protection systems, fall protection plan.
- Cranes, Derrick, Hoists, Elevators, Conveyors – project specific equipment information including type, rated load capacity, manufacture specification requirements, competent person, exposure to falling load, inspection, recordkeeping, clearance requirements, communication procedure, ground lines, permits.
- Excavation Safety – Competent person, project specific protective system.
- Maintenance and Protection of Traffic Plan – Project specific MPT plan, flagmen training.
- Steel Erection – Site specific erection plan, requirements for applicable written notifications, competent person.
- Demolition – Engineering survey, including written evidence, disconnection of all effected utilities, identification of all hazardous chemicals, materials, gases, etc., floor openings, chutes, inspection and maintenance of all stairs/passageways, removal of materials/debris/structural elements, lock out/tag out, competent person.
- Blasting and the Use of Explosives – Project specific safety procedures, warning signs, training/qualification, transportation, storage and use of explosives, inspection.
- Toxic and Hazardous Substances – Safety procedures for substances to be used on project.
- Noise Mitigation Plan – Completed project specific Noise Mitigation Plan.
- Confined Space Program – Project specific Confined Space Program, responsible staff, training records, equipment information, rescue procedure, list of project specific confined spaces, forms.
- Construction Vehicles/Heavy Equipment – Type of construction vehicles/heavy equipment to be used on site.
- Dust Mitigation Plan – Completed project specific Dust Mitigation Plan.

The most critical component of the Site Safety Plan is the Job Hazard Analysis (JHA) section. The JHA form is a written document prepared by the contractor. The contractor must conduct a site and task assessment JHA to identify the major job steps and any potential safety or environmental hazards related to performance of the work, eliminate or implement controls for the potential hazards, and identify proper personal protective equipment for the task. The JHA shall be communicated to all contractor/subcontractor personnel on site.
The initial Job Hazard Assessment form shall be included in the contractor's Site Safety Plan and the current form shall be available at the construction site for reference.

Certain DDC programs, such as Job Order Contracting System (JOCS), may not necessarily require Site Safety Plans. The JOCS contractor shall submit a Safety Program. The Site Safety Plan requirement for the JOCS contractor will be determined by QA&CS based on a project work scope, construction activities and project location. In addition, certain DDC Operating Units may establish client-specific program or safety requirements. The contractor's Site Safety Plan must address such client-specific program or safety requirements.

VII. KICK-OFF MEETINGS/PRE-CONSTRUCTION AND SAFETY REVIEW

RE/CPM shall invite QA&CS Construction Safety Unit to the construction kick-off meeting. A QA&CS representative will participate in this meeting with the Contractor and RE/CPM prior to the start of the project for the purpose of:

A. Reviewing the safety issues detailed in the contract.
B. Reviewing the Site Safety Plan.
C. Reviewing any new issues or information that was not previously addressed.
D. Discussing planned inspections and audits of the site by QA&CS personnel.

VIII. EVALUATION DURING WORK IN PROGRESS

The Contractor's adherence to these Safety Requirements will be monitored throughout the project. This will be accomplished by the following:

A. Use of a safety checklist by a representative of the Construction Safety Unit or other designated DDC representative or Consultant during regular, unannounced inspections of the job site. Field Exit Conferences will be held with the RE/CPM, Contractor Project Safety Representatives.

B. The RE/CPM will continually monitor the safety and environmental performance of the contractor's employees and work methods. Deficiencies shall be brought to the attention of the contractor's representative on site for immediate correction. The DDC representative will maintain a written record of these deficiencies and have these records available upon request. Any critical deficiencies shall be immediately reported to QA&CS phone# (718) 391-1624 or (718) 391-1911.

C. If the Contractor's safety performance during the project is not up to DDC standards (safety performance measure, accident/incident rate, etc.) the Director – QA&CS, or his/her designee will meet with the Contractor's Project Safety Representative and or Project Safety Manager, the DDC Project Manager, the RE/CPM, and the DDC Environmental Specialist (if environmental issues are involved). The purpose of this meeting is to 1) determine the level of non-compliance; 2) explain and clarify the safety/environmental provisions; 3) agree on a future course of action to correct the deficiencies.

D. If the deficiencies continue to occur with inadequate attention by the contractor, this shall, among other remedies available, be grounds for default.

E. The contractor shall within 1 hour inform the RE/CPM/CM of all accidents/incidents including all fatalities, any injuries to employees or members of the general public, and property damage (e.g., structural damage, equipment rollovers, utility damage, loads dropped from crane). The RE/CPM shall notify the Construction Safety Unit as per DDC's Construction Safety Emergency and Accident Notification and Response Protocol and shall maintain a record of all contractor accidents/incidents for the project.

F. The Construction Safety Unit shall be notified within two (2) hours of the start of any NYS-DOL/ NYC-COSH/ OSHA/ EPA inspections.

IX. SAFETY PERFORMANCE EVALUATION

The contractor's safety record, including accident/incident history and DDC safety inspection results, will be considered as part of the Contractor's performance evaluation at the conclusion of the project. Poor safety performance during the course of the project shall be a reason to rate a Contractor unsatisfactory which may be reflected in the City's Vendex system and will be considered for future procurement actions as set forth in the City's Procurement Policy Board Rules.

CITY OF NEW YORK

STANDARD CONSTRUCTION CONTRACT

March 2017

(NO TEXT ON THIS PAGE)

CITY OF NEW YORK
STANDARD CONSTRUCTION CONTRACT

TABLE OF CONTENTS

CHAPTER I: THE CONTRACT AND DEFINITIONS 1
ARTICLE 1. THE CONTRACT 1
ARTICLE 2. DEFINITIONS 1
CHAPTER II: THE WORK AND ITS PERFORMANCE 4
ARTICLE 3. CHARACTER OF THE WORK 4
ARTICLE 4. MEANS AND METHODS OF CONSTRUCTION 4
ARTICLE 5. COMPLIANCE WITH LAWS 5
ARTICLE 6. INSPECTION 10
ARTICLE 7. PROTECTION OF WORK AND OF PERSONS AND PROPERTY; NOTICES AND INDEMNIFICATION 11
CHAPTER III: TIME PROVISIONS 12
ARTICLE 8. COMMENCEMENT AND PROSECUTION OF THE WORK 12
ARTICLE 9. PROGRESS SCHEDULES 13
ARTICLE 10. REQUESTS FOR INFORMATION OR APPROVAL 13
ARTICLE 11. NOTICE OF CONDITIONS CAUSING DELAY AND DOCUMENTATION OF DAMAGES CAUSED BY DELAY 14
ARTICLE 12. COORDINATION WITH OTHER CONTRACTORS 18
ARTICLE 13. EXTENSION OF TIME FOR PERFORMANCE 19
ARTICLE 14. COMPLETION AND FINAL ACCEPTANCE OF THE WORK 21
ARTICLE 15. LIQUIDATED DAMAGES 23
ARTICLE 16. OCCUPATION OR USE PRIOR TO COMPLETION 23
CHAPTER IV: SUBCONTRACTS AND ASSIGNMENTS 24
ARTICLE 17. SUBCONTRACTS 24
ARTICLE 18. ASSIGNMENTS 26
CHAPTER V: CONTRACTOR'S SECURITY AND GUARANTEE 26
ARTICLE 19. SECURITY DEPOSIT 26
ARTICLE 20. PAYMENT GUARANTEE 27
ARTICLE 21. RETAINED PERCENTAGE 29
ARTICLE 22. INSURANCE 30
ARTICLE 23. MONEY RETAINED AGAINST CLAIMS 36
ARTICLE 24. MAINTENANCE AND GUARANTY 37
CHAPTER VI: CHANGES, EXTRA WORK, AND DOCUMENTATION OF CLAIM 38
ARTICLE 25. CHANGES 38
ARTICLE 26. METHODS OF PAYMENT FOR OVERRUNS AND EXTRA WORK 38
ARTICLE 27. RESOLUTION OF DISPUTES 41
ARTICLE 28. RECORD KEEPING FOR EXTRA OR DISPUTED WORK OR WORK ON A TIME & MATERIALS BASIS 45
ARTICLE 29. OMITTED WORK 46
ARTICLE 30. NOTICE AND DOCUMENTATION OF COSTS AND DAMAGES; PRODUCTION OF FINANCIAL RECORDS 46
CHAPTER VII: POWERS OF THE RESIDENT ENGINEER,THE ENGINEER OR ARCHITECT AND THE COMMISSIONER 48
ARTICLE 31. THE RESIDENT ENGINEER 48
ARTICLE 32. THE ENGINEER OR ARCHITECT OR PROJECT MANAGER 48
ARTICLE 33. THE COMMISSIONER 48
ARTICLE 34. NO ESTOPPEL 49
CHAPTER VIII: LABOR PROVISIONS 49
ARTICLE 35. EMPLOYEES 49
ARTICLE 36. NO DISCRIMINATION 57
ARTICLE 37. LABOR LAW REQUIREMENTS 59

ARTICLE 38. PAYROLL REPORTS 64
ARTICLE 39. DUST HAZARDS 64
CHAPTER IX: PARTIAL AND FINAL PAYMENTS 65
ARTICLE 40. CONTRACT PRICE 65
ARTICLE 41. BID BREAKDOWN ON LUMP SUM 65
ARTICLE 42. PARTIAL PAYMENTS 65
ARTICLE 43. PROMPT PAYMENT 66
ARTICLE 44. SUBSTANTIAL COMPLETION PAYMENT 66
ARTICLE 45. FINAL PAYMENT 67
ARTICLE 46. ACCEPTANCE OF FINAL PAYMENT 68
ARTICLE 47. APPROVAL BY PUBLIC DESIGN COMMISSION 69
CHAPTER X: CONTRACTOR'S DEFAULT 69
ARTICLE 48. COMMISSIONER'S RIGHT TO DECLARE CONTRACTOR IN DEFAULT 69
ARTICLE 49. EXERCISE OF THE RIGHT TO DECLARE DEFAULT 71
ARTICLE 50. QUITTING THE SITE 71
ARTICLE 51. COMPLETION OF THE WORK 71
ARTICLE 52. PARTIAL DEFAULT 71
ARTICLE 53. PERFORMANCE OF UNCOMPLETED WORK 72
ARTICLE 54. OTHER REMEDIES 72
CHAPTER XI: MISCELLANEOUS PROVISIONS 72
ARTICLE 55. CONTRACTOR'S WARRANTIES 72
ARTICLE 56. CLAIMS AND ACTIONS THEREON 73
ARTICLE 57. INFRINGEMENT 73
ARTICLE 58. NO CLAIM AGAINST OFFICIALS, AGENTS OR EMPLOYEES 74
ARTICLE 59. SERVICE OF NOTICES 74
ARTICLE 60. UNLAWFUL PROVISIONS DEEMED STRICKEN FROM CONTRACT 74
ARTICLE 61. ALL LEGAL PROVISIONS DEEMED INCLUDED 74
ARTICLE 62. TAX EXEMPTION 74
ARTICLE 63. INVESTIGATION(S) CLAUSE 76
ARTICLE 64. TERMINATION BY THE CITY 78
ARTICLE 65. CHOICE OF LAW, CONSENT TO JURISDICTION AND VENUE 80
ARTICLE 66. PARTICIPATION IN AN INTERNATIONAL BOYCOTT 81
ARTICLE 67. LOCALLY BASED ENTERPRISE PROGRAM 82
ARTICLE 68. ANTITRUST 82
ARTICLE 69. MACBRIDE PRINCIPLES PROVISIONS 83
ARTICLE 70. ELECTRONIC FILING/NYC DEVELOPMENT HUB 85
ARTICLE 71. PROHIBITION OF TROPICAL HARDWOODS 85
ARTICLE 72. CONFLICTS OF INTEREST 85
ARTICLE 73. MERGER CLAUSE 85
ARTICLE 74. STATEMENT OF WORK 85
ARTICLE 75. COMPENSATION TO BE PAID TO CONTRACTOR 85
ARTICLE 76. ELECTRONIC FUNDS TRANSFER 85
ARTICLE 77. RECORDS RETENTION 86
ARTICLE 78. EXAMINATION AND VIEWING OF SITE, CONSIDERATION OF OTHER SOURCES OF INFORMATION AND CHANGED SITE CONDITIONS 86

ARTICLE 79: PARTICIPATION BY MINORITY-OWNED AND WOMEN-OWNED BUSINESS ENTERPRISES IN CITY PROCUREMENT 87

SIGNATURES 95

ACKNOWLEDGMENT BY CORPORATION 96
ACKNOWLEDGMENT BY PARTNERSHIP 96
ACKNOWLEDGMENT BY INDIVIDUAL 96

ACKNOWLEDGMENT BY COMMISSIONER 97

AUTHORITY 98
COMPTROLLER'S CERTIFICATE 98
MAYOR'S CERTIFICATE 99
PERFORMANCE BOND #1 100
PERFORMANCE BOND #2 104
PAYMENT BOND 108

(NO TEXT ON THIS PAGE)

WITNESSETH:

The parties, in consideration of the mutual agreements contained herein, agree as follows:

CHAPTER I: THE CONTRACT AND DEFINITIONS

ARTICLE 1. THE CONTRACT

1.1 Except for titles, subtitles, headings, running headlines, tables of contents and indices (all of which are printed herein merely for convenience), the following, except for such portions thereof as may be specifically excluded, shall be deemed to be part of this **Contract**:

1.1.1 All provisions required by law to be inserted in this **Contract**, whether actually inserted or not;

1.1.2 The Contract Drawings and Specifications;

1.1.3 The General Conditions and Special Conditions, if any;

1.1.4 The **Contract**;

1.1.5 The Information for Bidders; Request for Proposals; Notice of Solicitation and Proposal For Bids; Bid or Proposal, and, if used, the Bid Booklet;

1.1.6 All Addenda issued prior to the receipt of the bids; the Notice of Award; Performance and Payment Bonds, if required; and the Notice to Proceed or the Order to Work.

1.2 Should any conflict occur in or between the Drawings and Specifications, the **Contractor** shall be deemed to have estimated the most expensive way of doing the **Work**, unless the **Contractor** shall have asked for and obtained a decision in writing from the **Commissioner** of the **Agency** that is entering into this **Contract**, before the submission of its bid, as to what shall govern.

ARTICLE 2. DEFINITIONS

2.1 The following words and expressions, or pronouns used in their stead, shall, wherever they appear in this Contract, be construed as follows, unless a different meaning is clear from the context:

2.1.1 **"Addendum"** or **"Addenda"** shall mean the additional Contract provisions and/or technical clarifications issued in writing by the Commissioner prior to the receipt of bids.

2.1.2 **"Agency"** shall mean a city, county, borough or other office, position, department, division, bureau, board or commission, or a corporation, institution or agency of government, the expenses of which are paid in whole or in part from the City treasury.

2.1.3 **"Agency Chief Contracting Officer" (ACCO)** shall mean a person delegated authority by the Commissioner to organize and supervise the procurement activity of subordinate Agency staff in conjunction with the CCPO, or his/her duly authorized representative.

2.1.4 **"Allowance"** shall mean a sum of money which the Agency may include in the total amount of the Contract for such specific contingencies as the Agency believes may be necessary to complete the Work, *e.g.*, lead or asbestos remediation, and for which the Contractor will be paid on the basis of stipulated unit prices or a formula set forth in the Contract or negotiated between the parties provided, however, that if the Contractor is not directed to use the Allowance, the Contractor shall have no right to such money and it shall be deducted from the total amount of the Contract.

2.1.5 **"City"** shall mean the City of New York.

2.1.6 **"City Chief Procurement Officer" (CCPO)** shall mean a person delegated authority by the Mayor to coordinate and oversee the procurement activity of Mayoral agency staff, including the ACCO and any offices which have oversight responsibility for the procurement of construction, or his/her duly authorized representative.

2.1.7 **"Commissioner"** shall mean the head of the Agency that has entered into this Contract, or his/her duly authorized representative.

2.1.8 **"Comptroller"** shall mean the Comptroller of the City of New York.

2.1.9 **"Contract"** or **"Contract Documents"** shall mean each of the various parts of the contract referred to in Article 1 hereof, both as a whole and severally.

2.1.10 **"Contract Drawings"** shall mean only those drawings specifically entitled as such and listed in the Specifications or in any Addendum, or any drawings furnished by the Commissioner, pertaining or supplemental thereto.

2.1.11 **"Contract Work"** shall mean everything required to be furnished and done by the Contractor by any one or more of the parts of the Contract referred to in Article 1, except Extra Work as hereinafter defined.

2.1.12 **"Contractor"** shall mean the entity which executed this Contract, whether a corporation, firm, partnership, joint venture, individual, or any combination thereof, and its, their, his/her successors, personal representatives, executors, administrators, and assigns, and any person, firm, partnership, joint venture, individual, or corporation which shall at any time be substituted in the place of the Contractor under this Contract.

2.1.13 **"Days"** shall mean calendar days, except where otherwise specified.

2.1.14 **"Engineer"** or **"Architect"** or **"Project Manager"** shall mean the person so designated in writing by the Commissioner in the Notice to Proceed or the Order to Work to act as such in relation to this Contract, including a private Architect or Engineer or Project Manager, as the case may be. Subject to written approval by the Commissioner, the Engineer, Architect or Project Manager may designate an authorized representative.

2.1.15 **"Engineering Audit Officer" (EAO)** shall mean the person so designated by the Commissioner to perform responsible auditing functions hereunder.

2.1.16 **"Extra Work"** shall mean Work other than that required by the Contract at the time of award which is authorized by the Commissioner pursuant to Chapter VI of this Contract.

2.1.17 **"Federal-Aid Contract"** shall mean a contract in which the United States (federal) Government provides financial funding as so designated in the Information for Bidders.

2.1.18 **"Final Acceptance"** shall mean final written acceptance of all the Work by the Commissioner, a copy of which shall be sent to the Contractor.

2.1.19 **"Final Approved Punch List"** shall mean a list, approved pursuant to Article 14.2.2, specifying those items of Work to be completed by the Contractor after Substantial Completion and dates for the completion of each item of Work.

2.1.20 **"Law"** or **"Laws"** shall mean the Constitution of the State of New York, the New York City Charter, the New York City Administrative Code, a statute of the United States or of the State of New York, a local law of the City of New York, any ordinance, rule or regulation having the force of law, or common law.

2.1.21 **"Materialman"** shall mean any corporation, firm, partnership, joint venture, or individual, other than employees of the Contractor, who or which contracts with the Contractor or any Subcontractor, to fabricate or deliver, or who actually fabricates or delivers, plant, materials or equipment to be incorporated in the Work.

2.1.22 **"Means and Methods of Construction"** shall mean the labor, materials, temporary structures, tools, plant, and construction equipment, and the manner and time of their use, necessary to accomplish the result intended by this Contract.

2.1.23**"Notice to Proceed" or "Order to Work"** shall mean the written notice issued by the Commissioner specifying the time for commencement of the Work and the Engineer, Architect or Project Manager.

2.1.24 **"Other Contractor(s)"** shall mean any contractor (other than the entity which executed this Contract or its Subcontractors) who or which has a contract with the City for work on or adjacent to the building or Site of the Work.

2.1.25 **"Payroll Taxes"** shall mean State Unemployment Insurance (SUI), Federal Unemployment Insurance (FUI), and payments pursuant to the Federal Insurance Contributions Act (FICA).

2.1.26 **"Project"** shall mean the public improvement to which this Contract relates.

2.1.27 **"Procurement Policy Board" (PPB)** shall mean the Agency of the City of New York whose function is to establish comprehensive and consistent procurement policies and rules which shall have broad application throughout the City.

2.1.28 **"Required Quantity"** in a unit price Contract shall mean the actual quantity of any item of Work or materials which is required to be performed or furnished in order to comply with the Contract.

2.1.29 **"Resident Engineer"** shall mean the representative of the Commissioner duly designated by the Commissioner to be his/her representative at the site of the Work.

2.1.30 **"Site"** shall mean the area upon or in which the Contractor's operations are carried on, and such other areas adjacent thereto as may be designated as such by the Engineer.

2.1.31 **"Small Tools"** shall mean items that are ordinarily required for a worker's job function, including but not limited to, equipment that ordinarily has no licensing, insurance or substantive storage costs associated with it; such as circular and chain saws, impact drills, threaders, benders, wrenches, socket tools, etc.

2.1.32 **"Specifications"** shall mean all of the directions, requirements, and standards of performance applying to the Work as hereinafter detailed and designated under the Specifications.

2.1.33 **"Subcontractor"** shall mean any person, firm or corporation, other than employees of the Contractor, who or which contracts with the Contractor or with its subcontractors to furnish, or actually furnishes labor, or labor and materials, or labor and equipment, or superintendence, supervision and/or management at the Site. Wherever the word Subcontractor appears, it shall also mean sub-Subcontractor.

2.1.34 **"Substantial Completion"** shall mean the written determination by the Engineer that the Work required under this Contract is substantially, but not entirely, complete and the approval of the **Final Approved Punch List.**

2.1.35 **"Work"** shall mean all services required to complete the Project in accordance with the Contract Documents, including without limitation, labor, material, superintendence, management, administration, equipment, and incidentals, and obtaining any and all permits, certifications and licenses as may be necessary and required to complete the Work, and shall include both Contract Work and Extra Work.

CHAPTER II: THE WORK AND ITS PERFORMANCE

ARTICLE 3. CHARACTER OF THE WORK

3.1 Unless otherwise expressly provided in the **Contract Drawings**, **Specifications,** and **Addenda**, the **Work** shall be performed in accordance with the best modern practice, utilizing, unless otherwise specified in writing, new and unused materials of standard first grade quality and workmanship and design of the highest quality, to the satisfaction of the **Commissioner**.

ARTICLE 4. MEANS AND METHODS OF CONSTRUCTION

4.1 Unless otherwise expressly provided in the **Contract Drawings, Specifications,** and **Addenda**, the **Means and Methods of Construction** shall be such as the **Contractor** may choose; subject, however, to the **Engineer's** right to reject the **Means and Methods of Construction** proposed by the **Contractor** which in the opinion of the **Engineer**:

4.1.1 Will constitute or create a hazard to the **Work**, or to persons or property; or

4.1.2 Will not produce finished **Work** in accordance with the terms of the **Contract**; or

4.1.3 Will be detrimental to the overall progress of the **Project**.

4.2 The **Engineer's** approval of the **Contractor's Means and Methods of Construction**, or his/her failure to exercise his/her right to reject such means or methods, shall not relieve the **Contractor**

of its obligation to complete the **Work** as provided in this **Contract**; nor shall the exercise of such right to reject create a cause of action for damages.

ARTICLE 5. COMPLIANCE WITH LAWS

5.1 The **Contractor** shall comply with all **Laws** applicable to this **Contract** and to the **Work** to be done hereunder.

5.2 Procurement Policy Board Rules: This **Contract** is subject to the Rules of the **PPB** ("**PPB** Rules") in effect at the time of the bid opening for this **Contract**. In the event of a conflict between the **PPB** Rules and a provision of this **Contract**, the **PPB** Rules shall take precedence.

5.3 Noise Control Code provisions.

5.3.1 In accordance with the provisions of Section 24-216(b) of the Administrative Code of the **City** ("Administrative Code"), Noise Abatement Contract Compliance, devices and activities which will be operated, conducted, constructed or manufactured pursuant to this **Contract** and which are subject to the provisions of the **City** Noise Control Code shall be operated, conducted, constructed, or manufactured without causing a violation of the Administrative Code. Such devices and activities shall incorporate advances in the art of noise control development for the kind and level of noise emitted or produced by such devices and activities, in accordance with regulations issued by the **Commissioner** of the **City** Department of Environmental Protection.

5.3.2 The **Contractor** agrees to comply with Section 24-219 of the Administrative Code and implementing rules codified at 15 Rules of the City of New York ("RCNY") Section 28-100 *et seq*. In accordance with such provisions, the **Contractor**, if the **Contractor** is the responsible party under such regulations, shall prepare and post a Construction Noise Mitigation Plan at each **Site**, in which the **Contractor** shall certify that all construction tools and equipment have been maintained so that they operate at normal manufacturers operating specifications. If the **Contractor** cannot make this certification, it must have in place an Alternative Noise Mitigation Plan approved by the **City** Department of Environmental Protection. In addition, the **Contractor**'s certified Construction Noise Mitigation Plan is subject inspection by the **City** Department of Environmental Protection in accordance with Section 28-101 of Title 15 of RCNY. No **Contract Work** may take place at a **Site** unless there is a Construction Noise Mitigation Plan or approved Alternative Noise Mitigation Plan in place. In addition, the **Contractor** shall create and implement a noise mitigation training program. Failure to comply with these requirements may result in fines and other penalties pursuant to the applicable provisions of the Administrative Code and RCNY.

5.4 Ultra Low Sulfur Diesel Fuel: In accordance with the provisions of Section 24-163.3 of the Administrative Code, the **Contractor** specifically agrees as follows:

5.4.1 Definitions. For purposes of this Article 5.4, the following definitions apply:

5.4.1(a) "Contractor" means any person or entity that enters into a Public Works Contract with a **City Agency**, or any person or entity that enters into an agreement with such person or entity, to perform work or provide labor or services related to such Public Works Contract.

5.4.1(b) "Motor Vehicle" means any self-propelled vehicle designed for transporting persons or property on a street or highway.

5.4.1(c) "Nonroad Engine" means an internal combustion engine (including the fuel system) that is not used in a Motor Vehicle or a vehicle used solely for competition, or that is not subject to standards promulgated under Section 7411 or Section 7521 of Title 42 of the United States Code, except that this term shall apply to internal combustion engines used to power generators, compressors or similar equipment used in any construction program or project.

5.4.1(d) "Nonroad Vehicle" means a vehicle that is powered by a Nonroad Engine, fifty (50) horsepower and greater, and that is not a Motor Vehicle or a vehicle used solely for competition, which shall include, but not be limited to, excavators, backhoes, cranes, compressors, generators, bulldozers, and similar equipment, except that this term shall not apply to horticultural maintenance vehicles used for landscaping purposes that are powered by a Nonroad Engine of sixty-five (65) horsepower or less and that are not used in any construction program or project.

5.4.1(e) "Public Works Contract" means a contract with a **City Agency** for a construction program or project involving the construction, demolition, restoration, rehabilitation, repair, renovation, or abatement of any building, structure, tunnel, excavation, roadway, park or bridge; a contract with a **City Agency** for the preparation for any construction program or project involving the construction, demolition, restoration, rehabilitation, repair, renovation, or abatement of any building, structure, tunnel, excavation, roadway, park or bridge; or a contract with a **City Agency** for any final work involved in the completion of any construction program or project involving the construction, demolition, restoration, rehabilitation, repair, renovation, or abatement of any building, structure, tunnel, excavation, roadway, park or bridge.

5.4.1(f) "Ultra Low Sulfur Diesel Fuel" means diesel fuel that has a sulfur content of no more than fifteen parts per million (15 ppm).

5.4.2 Ultra Low Sulfur Diesel Fuel

5.4.2(a) All **Contractors** shall use Ultra Low Sulfur Diesel Fuel in diesel-powered Nonroad Vehicles in the performance of this **Contract**.

5.4.2(b) Notwithstanding the requirements of Article 5.4.2(a), **Contractors** may use diesel fuel that has a sulfur content of no more than thirty parts per million (30 ppm) to fulfill the requirements of this Article 5.4.2, where the Commissioner of the **City** Department of Environmental Protection ("DEP Commissioner") has issued a determination that a sufficient quantity of Ultra Low Sulfur Diesel Fuel is not available to meet the needs of **Agencies** and **Contractors**. Any such determination shall expire after six (6) months unless renewed.

5.4.2(c) **Contractors** shall not be required to comply with this Article 5.4.2 where the **City Agency** letting this **Contract** makes a written finding, which is approved, in writing, by the DEP Commissioner, that a sufficient quantity of Ultra Low Sulfur Diesel Fuel, or diesel fuel that has a sulfur content of no more than thirty parts per million (30 ppm) is not available to meet the requirements of Section 24-163.3 of the Administrative Code, provided that such **Contractor** in its fulfillment of the

requirements of this **Contract**, to the extent practicable, shall use whatever quantity of Ultra Low Sulfur Diesel Fuel or diesel fuel that has a sulfur content of no more than thirty parts per million (30 ppm) is available. Any finding made pursuant to this Article 5.4.2(c) shall expire after sixty (60) **Days**, at which time the requirements of this Article 5.4.2 shall be in full force and effect unless the **City Agency** renews the finding in writing and such renewal is approved by the DEP Commissioner.

5.4.2(d) **Contractors** may check on determinations and approvals issued by the DEP Commissioner pursuant to Section 24-163.3 of the Administrative Code, if any, at www.dep.nyc.gov or by contacting the **City Agency** letting this **Contract**.

5.4.2(e) The requirements of this Article 5.4.2 do not apply where they are precluded by federal or State funding requirements or where the **Contract** is an emergency procurement.

5.4.3 Best Available Technology

5.4.3(a) All **Contractors** shall utilize the best available technology for reducing the emission of pollutants for diesel-powered Nonroad Vehicles in the performance of this **Contract**. For determinations of best available technology for each type of diesel-powered Nonroad Vehicle, **Contractors** shall comply with the regulations of the **City** Department of Environmental Protection, as and when adopted, Chapter 14 of Title 15 of the Rules of the City of New York (RCNY). The **Contractor** shall fully document all steps in the best available technology selection process and shall furnish such documentation to the **City Agency** or the DEP Commissioner upon request. The **Contractor** shall retain all documentation generated in the best available technology selection process for as long as the selected best available technology is in use.

5.4.3(b) No **Contractor** shall be required to replace best available technology for reducing the emission of pollutants or other authorized technology utilized for a diesel-powered Nonroad Vehicle in accordance with the provisions of this Article 5.4.3 within three (3) years of having first utilized such technology for such vehicle.

5.4.3(c) This Article 5.4.3 shall not apply to any vehicle used to satisfy the requirements of a specific Public Works Contract for fewer than twenty (20) **Days**.

5.4.3(d) The **Contractor** shall not be required to comply with this Article 5.4.3 with respect to a diesel-powered Nonroad Vehicle under the following circumstances:

5.4.3(d)(i) Where the **City Agency** makes a written finding, which is approved, in writing, by the DEP Commissioner, that the best available technology for reducing the emission of pollutants as required by this Article 5.4.3 is unavailable for such vehicle, the **Contractor** shall use whatever technology for reducing the emission of pollutants, if any, is available and appropriate for such vehicle.

5.4.3(d)(ii) Where the DEP Commissioner has issued a written waiver based upon the **Contractor** having demonstrated to the DEP Commissioner that the use of the best available technology for reducing the emission of pollutants might endanger the operator of such vehicle or those working near such vehicle, due to engine malfunction, the **Contractor** shall use whatever technology for

reducing the emission of pollutants, if any, is available and appropriate for such vehicle, which would not endanger the operator of such vehicle or those working near such vehicle.

5.4.3(d)(iii) In determining which technology to use for the purposes of Articles 5.4.3(d)(i) and 5.4.3(d)(ii) above, the **Contractor** shall primarily consider the reduction in emissions of particulate matter and secondarily consider the reduction in emissions of nitrogen oxides associated with the use of such technology, which shall in no event result in an increase in the emissions of either such pollutant.

5.4.3(d)(iv) The **Contractor** shall submit requests for a finding or a waiver pursuant to this Article 5.4.3(d) in writing to the DEP Commissioner, with a copy to the **ACCO** of the **City Agency** letting this **Contract**. Any finding or waiver made or issued pursuant to Articles 5.4.3(d)(i) and 5.4.3(d)(ii) above shall expire after one hundred eighty (180) **Days**, at which time the requirements of Article 5.4.3(a) shall be in full force and effect unless the **City Agency** renews the finding, in writing, and the DEP Commissioner approves such finding, in writing, or the DEP Commissioner renews the waiver, in writing.

5.4.3(e) The requirements of this Article 5.4.3 do not apply where they are precluded by federal or State funding requirements or where the **Contract** is an emergency procurement.

5.4.4 Section 24-163 of the Administrative Code. The **Contractor** shall comply with Section 24-163 of the Administrative Code related to the idling of the engines of motor vehicles while parking.

5.4.5 Compliance

5.4.5(a) The **Contractor's** compliance with Article 5.4 may be independently monitored. If it is determined that the **Contractor** has failed to comply with any provision of Article 5.4, any costs associated with any independent monitoring incurred by the **City** shall be reimbursed by the **Contractor**.

5.4.5(b) Any **Contractor** who violates any provision of Article 5.4, except as provided in Article 5.4.5(c) below, shall be liable for a civil penalty between the amounts of one thousand ($1,000) and ten thousand ($10,000) dollars, in addition to twice the amount of money saved by such **Contractor** for failure to comply with Article 5.4.

5.4.5(c) No **Contractor** shall make a false claim with respect to the provisions of Article 5.4 to a **City Agency**. Where a **Contractor** has been found to have done so, such **Contractor** shall be liable for a civil penalty of twenty thousand ($20,000) dollars, in addition to twice the amount of money saved by such **Contractor** in association with having made such false claim.

5.4.6 Reporting

5.4.6(a) For all Public Works Contracts covered by this Article 5.4, the **Contractor** shall report to the **City Agency** the following information:

5.4.6(a)(i) The total number of diesel-powered Nonroad Vehicles used to fulfill the requirements of this Public Works Contract;

5.4.6(a)(ii) The number of such Nonroad Vehicles that were powered by Ultra Low Sulfur Diesel Fuel;

5.4.6(a)(iii) The number of such Nonroad Vehicles that utilized the best available technology for reducing the emission of pollutants, including a breakdown by vehicle model and the type of technology;

5.4.6(a)(iv) The number of such Nonroad Vehicles that utilized such other authorized technology in accordance with Article 5.4.3, including a breakdown by vehicle model and the type of technology used for each such vehicle;

5.4.6(a)(v) The locations where such Nonroad Vehicles were used; and

5.4.6(a)(vi) Where a determination is in effect pursuant to Article 5.4.2(b) or 5.4.2(c), detailed information concerning the **Contractor's** efforts to obtain Ultra Low Sulfur Diesel Fuel or diesel fuel that has a sulfur content of no more than thirty parts per million (30 ppm).

5.4.6(b) The **Contractor** shall submit the information required by Article 5.4.6(a) at the completion of **Work** under the Public Works Contract and on a yearly basis no later than August 1 throughout the term of the Public Works Contract. The yearly report shall cover **Work** performed during the preceding fiscal year (July 1 - June 30).

5.5 Ultra Low Sulfur Diesel Fuel. In accordance with the Coordinated Construction Act for Lower Manhattan, as amended:

5.5.1 Definitions. For purposes of this Article 5.5, the following definitions apply:

5.5.1(a) "Lower Manhattan" means the area to the south of and within the following lines: a line beginning at a point where the United States pierhead line in the Hudson River as it exists now or may be extended would intersect with the southerly line of West Houston Street in the Borough of Manhattan extended, thence easterly along the southerly side of West Houston Street to the southerly side of Houston Street, thence easterly along the southerly side of Houston Street to the southerly side of East Houston Street, thence northeasterly along the southerly side of East Houston Street to the point where it would intersect with the United States pierhead line in the East River as it exists now or may be extended, including tax lots within or immediately adjacent thereto.

5.5.1(b) "Lower Manhattan Redevelopment Project" means any project in Lower Manhattan that is funded in whole or in part with federal or State funding, or any project intended to improve transportation between Lower Manhattan and the two air terminals in the **City** known as LaGuardia Airport and John F. Kennedy International Airport, or between Lower Manhattan and the air terminal in Newark known as Newark Liberty International Airport, and that is funded in whole or in part with federal funding.

5.5.1(c) "Nonroad Engine" means an internal combustion engine (including the fuel system) that is not used in a Motor Vehicle or a vehicle used solely for competition, or that is not subject to standards promulgated under Section 7411 or Section 7521 of Title 42 of the United States Code, except that this term shall apply to internal combustion engines used to power generators, compressors or similar equipment used in any construction program or project.

5.5.1(d) "Nonroad Vehicle" means a vehicle that is powered by a Nonroad Engine, fifty (50) horsepower (HP) and greater, and that is not a Motor Vehicle or a vehicle used solely for competition, which shall include, but not be limited to, excavators, backhoes, cranes, compressors, generators, bulldozers, and similar equipment, except that this terms shall not apply to horticultural maintenance vehicles used for landscaping purposes that are powered by a Nonroad Engine of sixty-five (65) HP or less and that are not used in any construction program or project.

5.5.1(e) "Ultra Low Sulfur Diesel Fuel" means diesel fuel that has a sulfur content of no more than fifteen parts per million (15 ppm).

5.5.2 Requirements. **Contractors** and **Subcontractors** are required to use only Ultra Low Sulfur Diesel Fuel to power the diesel-powered Nonroad Vehicles with engine HP rating of fifty (50) HP and above used on a Lower Manhattan Redevelopment Project and, where practicable, to reduce the emission of pollutants by retrofitting such Nonroad Vehicles with oxidation catalysts, particulate filters, or technology that achieves lowest particulate matter emissions.

5.6 Pesticides. In accordance with Section 17-1209 of the Administrative Code, to the extent that the **Contractor** or any **Subcontractor** applies pesticides to any property owned or leased by the **City**, the **Contractor,** and any **Subcontractor** shall comply with Chapter 12 of the Administrative Code.

5.7 Waste Treatment, Storage, and Disposal Facilities and Transporters. In connection with the **Work**, the **Contractor** and any **Subcontractor** shall use only those waste treatment, storage, and disposal facilities and waste transporters that possess the requisite license, permit or other governmental approval necessary to treat, store, dispose, or transport the waste, materials or hazardous substances.

5.8 Environmentally Preferable Purchasing. The **Contractor** shall ensure that products purchased or leased by the **Contractor** or any **Subcontractor** for the **Work** that are not specified by the **City** or are submitted as equivalents to a product specified by the **City** comply with the requirements of the New York City Environmentally Preferable Purchasing Program contained in Chapter 11 of Title 43 of the RCNY, pursuant to Chapter 3 of Title 6 of the Administrative Code.

ARTICLE 6. INSPECTION

6.1 During the progress of the **Work** and up to the date of **Final Acceptance**, the **Contractor** shall at all times afford the representatives of the **City** every reasonable, safe, and proper facility for inspecting all **Work** done or being done at the **Site** and also for inspecting the manufacture or preparation of materials and equipment at the place of such manufacture or preparation.

6.2 The **Contractor's** obligation hereunder shall include the uncovering or taking down of finished **Work** and its restoration thereafter; provided, however, that the order to uncover, take down and restore shall be in writing, and further provided that if **Work** thus exposed proves satisfactory, and if the **Contractor** has complied with Article 6.1, such uncovering or taking down and restoration shall be

considered an item of **Extra Work** to be paid for in accordance with the provisions of Article 26. If the **Work** thus exposed proves unsatisfactory, the **City** has no obligation to compensate the **Contractor** for the uncovering, taking down or restoration.

6.3 Inspection and approval by the **Commissioner**, the **Engineer**, **Project Manager**, or **Resident Engineer**, of finished **Work** or of **Work** being performed, or of materials and equipment at the place of manufacture or preparation, shall not relieve the **Contractor** of its obligation to perform the **Work** in strict accordance with the **Contract**. Finished or unfinished **Work** not found to be in strict accordance with the **Contract** shall be replaced as directed by the **Engineer**, even though such **Work** may have been previously approved and paid for. Such corrective **Work** is **Contract Work** and shall not be deemed **Extra Work**.

6.4 Rejected **Work** and materials shall be promptly taken down and removed from the **Site**, which must at all times be kept in a reasonably clean and neat condition.

ARTICLE 7. PROTECTION OF WORK AND OF PERSONS AND PROPERTY; NOTICES AND INDEMNIFICATION

7.1 During the performance of the **Work** and up to the date of **Final Acceptance**, the **Contractor** shall be under an absolute obligation to protect the finished and unfinished **Work** against any damage, loss, injury, theft and/or vandalism and in the event of such damage, loss, injury, theft and/or vandalism, it shall promptly replace and/or repair such **Work** at the **Contractor's** sole cost and expense, as directed by the **Resident Engineer**. The obligation to deliver finished **Work** in strict accordance with the **Contract** prior to **Final Acceptance** shall be absolute and shall not be affected by the **Resident Engineer's** approval of, or failure to prohibit, the **Means and Methods of Construction** used by the **Contractor**.

7.2 During the performance of the **Work** and up to the date of **Final Acceptance**, the **Contractor** shall take all reasonable precautions to protect all persons and the property of the **City** and of others from damage, loss or injury resulting from the **Contractor's**, and/or its **Subcontractors'** operations under this **Contract.** The **Contractor's** obligation to protect shall include the duty to provide, place or replace, and adequately maintain at or about the **Site** suitable and sufficient protection such as lights, barricades, and enclosures.

7.3 The **Contractor** shall comply with the notification requirements set forth below in the event of any loss, damage or injury to **Work**, persons or property, or any accidents arising out of the operations of the **Contractor** and/or its **Subcontractors** under this **Contract**.

7.3.1 The **Contractor** shall make a full and complete report in writing to the **Resident Engineer** within three (3) **Days** after the occurrence.

7.3.2 The **Contractor** shall also send written notice of any such event to all insurance carriers that issued potentially responsive policies (including commercial general liability insurance carriers for events relating to the **Contractor**'s own employees) no later than twenty (20) days after such event and again no later than twenty (20) days after the initiation of any claim and/or action resulting therefrom. Such notice shall contain the following information: the number of the insurance policy, the name of the Named Insured, the date and location of the incident, and the identity of the persons injured or property damaged. For any policy on which the **City** and/or the **Engineer**, **Architect**, or **Project Manager** are Additional Insureds, such notice shall expressly specify that "this notice is

being given on behalf of the City of New York as Additional Insured, such other Additional Insureds, as well as the Named Insured."

7.3.2(a) Whenever such notice is sent under a policy on which the **City** is an Additional Insured, the **Contractor** shall provide copies of the notice to the **Comptroller,** the **Commissioner** and the **City** Corporation Counsel. The copy to the **Comptroller** shall be sent to the Insurance Unit, NYC Comptroller's Office, 1 Centre Street – Room 1222, New York, New York, 10007. The copy to the **Commissioner** shall be sent to the address set forth in Schedule A of the General Conditions. The copy to the **City** Corporation Counsel shall be sent to Insurance Claims Specialist, Affirmative Litigation Division, New York City Law Department, 100 Church Street, New York, New York 10007.

7.3.2(b) If the **Contractor** fails to provide any of the foregoing notices to any appropriate insurance carrier(s) in a timely and complete manner, the **Contractor** shall indemnify the **City** for all losses, judgments, settlements, and expenses, including reasonable attorneys' fees, arising from an insurer's disclaimer of coverage citing late notice by or on behalf of the **City**.

7.4 To the fullest extent permitted by law, the **Contractor** shall defend, indemnify, and hold the **City**, its employees, and officials (the "Indemnitees") harmless against any and all claims (including but not limited to claims asserted by any employee of the **Contractor** and/or its **Subcontractors**) and costs and expenses of whatever kind (including but not limited to payment or reimbursement of attorneys' fees and disbursements) allegedly arising out of or in any way related to the operations of the **Contractor** and/or its **Subcontractors** in the performance of this **Contract** or from the **Contractor's** and/or its **Subcontractors'** failure to comply with any of the provisions of this **Contract** or of the **Law**. Such costs and expenses shall include all those incurred in defending the underlying claim and those incurred in connection with the enforcement of this Article 7.4 by way of cross-claim, third-party claim, declaratory action or otherwise. The parties expressly agree that the indemnification obligation hereunder contemplates (1) full indemnity in the event of liability imposed against the Indemnitees without negligence and solely by reason of statute, operation of **Law** or otherwise; and (2) partial indemnity in the event of any actual negligence on the part of the Indemnitees either causing or contributing to the underlying claim (in which case, indemnification will be limited to any liability imposed over and above that percentage attributable to actual fault whether by statute, by operation of **Law**, or otherwise). Where partial indemnity is provided hereunder, all costs and expenses shall be indemnified on a pro rata basis.

7.4.1 Indemnification under Article 7.4 or any other provision of the **Contract** shall operate whether or not **Contractor** or its **Subcontractors** have placed and maintained the insurance specified under Article 22.

7.5 The provisions of this Article 7 shall not be deemed to create any new right of action in favor of third parties against the **Contractor** or the **City**.

CHAPTER III: TIME PROVISIONS

ARTICLE 8. COMMENCEMENT AND PROSECUTION OF THE WORK

8.1 The **Contractor** shall commence the **Work** on the date specified in the **Notice to Proceed** or the **Order to Work**. The time for performance of the **Work** under the **Contract** shall be computed from

the date specified in the **Notice to Proceed** or the **Order to Work. TIME BEING OF THE ESSENCE** to the **City**, the **Contractor** shall thereafter prosecute the **Work** diligently, using such **Means and Methods of Construction** as are in accord with Article 4 herein and as will assure its completion not later than the date specified in this Contract, or on the date to which the time for completion may be extended.

ARTICLE 9. PROGRESS SCHEDULES

9.1 To enable the **Work** to be performed in an orderly and expeditious manner, the **Contractor**, within fifteen (15) **Days** after the **Notice to Proceed** or **Order to Work**, unless otherwise directed by the **Engineer**, shall submit to the **Engineer** a proposed progress schedule based on the Critical Path Method in the form of a bar graph or in such other form as specified by the **Engineer**, and monthly cash flow requirements, showing:

9.1.1 The anticipated time of commencement and completion of each of the various operations to be performed under this **Contract**; and

9.1.2 The sequence and interrelation of each of these operations with the others and with those of other related contracts; and

9.1.3 The estimated time required for fabrication or delivery, or both, of all materials and equipment required for the **Work**, including the anticipated time for obtaining required approvals pursuant to Article 10; and

9.1.4 The estimated amount in dollars the **Contractor** will claim on a monthly basis.

9.2 The proposed schedule shall be revised as directed by the **Engineer**, until finally approved by the **Engineer**, and after such approval, subject to the provisions of Article 11, shall be strictly adhered to by the **Contractor**.

9.3 If the **Contractor** shall fail to adhere to the approved progress schedule, or to the schedule as revised pursuant to Article 11, it shall promptly adopt such other or additional **Means and Methods of Construction**, at its sole cost and expense, as will make up for the time lost and will assure completion in accordance with the approved progress schedule. The approval by the **City** of a progress schedule which is shorter than the time allotted under the **Contract** shall not create any liability for the **City** if the approved progress schedule is not met.

9.4 The **Contractor** will not receive any payments until the proposed progress schedule is submitted.

ARTICLE 10. REQUESTS FOR INFORMATION OR APPROVAL

10.1 From time to time as the **Work** progresses and in the sequence indicated by the approved progress schedule, the **Contractor** shall submit to the **Engineer** a specific request in writing for each item of information or approval required by the **Contractor**. These requests shall state the latest date upon which the information or approval is actually required by the **Contractor**, and shall be submitted in a reasonable time in advance thereof to provide the **Engineer** a sufficient time to act upon such submissions, or any necessary re-submissions thereof.

10.2 The **Contractor** shall not have any right to an extension of time on account of delays due to the **Contractor's** failure to submit requests for the required information or the required approval in accordance with the above requirements.

ARTICLE 11. NOTICE OF CONDITIONS CAUSING DELAY AND DOCUMENTATION OF DAMAGES CAUSED BY DELAY

11.1 After the commencement of any condition which is causing or may cause a delay in completion of the **Work**, including conditions for which the **Contractor** may be entitled to an extension of time, the following notifications and submittals are required:

11.1.1 Within fifteen (15) **Days** after the **Contractor** becomes aware or reasonably should be aware of each such condition, the **Contractor** must notify the **Resident Engineer** or **Engineer**, as directed by the **Commissioner**, in writing of the existence, nature and effect of such condition upon the approved progress schedule and the **Work**, and must state why and in what respects, if any, the condition is causing or may cause a delay. Such notice shall include a description of the construction activities that are or could be affected by the condition and may include any recommendations the **Contractor** may have to address the delay condition and any activities the **Contractor** may take to avoid or minimize the delay.

11.1.2 If the **Contractor** shall claim to be sustaining damages for delay as provided for in this Article 11,within forty-five (45) **Days** from the time such damages are first incurred for each such condition, the **Contractor** shall submit to the **Commissioner** a verified written statement of the details and estimates of the amounts of such damages, including categories of expected damages and projected monthly costs, together with documentary evidence of such damages as the **Contractor** may have at the time of submission ("statement of delay damages"), as further detailed in Article 11.6. The **Contractor** may submit the above statement within such additional time as may be granted by the **Commissioner** in writing upon written request therefor.

11.1.3 Articles 11.1.1 and 11.1.2 do not relieve the **Contractor** of its obligation to comply with the provisions of Article 44.

11.2 Failure of the **Contractor** to strictly comply with the requirements of Article 11.1.1 may, in the discretion of the **Commissioner**, be deemed sufficient cause to deny any extension of time on account of delay arising out of such condition. Failure of the **Contractor** to strictly comply with the requirements of both Articles 11.1.1 and 11.1.2 shall be deemed a conclusive waiver by the **Contractor** of any and all claims for damages for delay arising from such condition and no right to recover on such claims shall exist.

11.3 When appropriate and directed by the **Engineer**, the progress schedule shall be revised by the **Contractor** until finally approved by the **Engineer**. The revised progress schedule must be strictly adhered to by the **Contractor**.

11.4 Compensable Delays

11.4.1 The **Contractor** agrees to make claim only for additional costs attributable to delay in the performance of this **Contract** necessarily extending the time for completion of the **Work** or resulting from acceleration directed by the **Commissioner** and required to maintain the progress schedule, occasioned solely by any act or omission to act of the **City** listed below. The **Contractor** also agrees that delay from any other cause shall be

compensated, if at all, solely by an extension of time to complete the performance of the **Work**.

11.4.1.1 The failure of the **City** to take reasonable measures to coordinate and progress the **Work** to the extent required by the **Contract**, except that the City shall not be responsible for the **Contractor's** obligation to coordinate and progress the **Work** of its **Subcontractors**.

11.4.1.2 Unreasonable delays attributable to the review of shop drawings, the issuance of change orders, or the cumulative impact of change orders that were not brought about by any act or omission of the **Contractor**.

11.4.1.3 The unavailability of the **Site** caused by acts or omissions of the **City**..

11.4.1.4 The issuance by the **Engineer** of a stop work order that was not brought about through any act or omission of the **Contractor**.

11.4.1.5 Differing site conditions or environmental hazards that were neither known nor reasonably ascertainable on a pre-bid inspection of the **Site** or review of the bid documents or other publicly available sources, and that are not ordinarily encountered in the **Project**'s geographical area or neighborhood or in the type of **Work** to be performed.

11.4.1.6 Delays caused by the **City's** bad faith or its willful, malicious, or grossly negligent conduct;

11.4.1.7 Delays not contemplated by the parties;

11.4.1.8 Delays so unreasonable that they constitute an intentional abandonment of the **Contract** by the **City**; and

11.4.1.9 Delays resulting from the **City's** breach of a fundamental obligation of the **Contract**.

11.4.2 No claim may be made for any alleged delay in **Substantial Completion** of the **Work** if the **Work** will be or is substantially completed by the date of **Substantial Completion** provided for in Schedule A unless acceleration has been directed by the **Commissioner** to meet the date of **Substantial Completion** set forth in Schedule A, or unless there is a provision in the **Contract** providing for additional compensation for early completion.

11.4.3 The provisions of this Article 11 apply only to claims for additional costs attributable to delay and do not preclude determinations by the **Commissioner** allowing reimbursements for additional costs for **Extra Work** pursuant to Articles 25 and 26 of this **Contract**. To the extent that any cost attributable to delay is reimbursed as part of a change order, no additional claim for compensation under this Article 11 shall be allowed.

11.5 Non-Compensable Delays. The **Contractor** agrees to make no claim for, and is deemed to have included in its bid prices for the various items of the **Contract**, the extra/additional costs attributable to any delays caused by or attributable to the items set forth below. For such items, the **Contractor** shall be compensated, if at all, solely by an extension of time to complete the performance of the **Work**, in accordance with the provisions of Article 13. Such extensions of time will be granted, if at all, pursuant to the grounds set forth in Article 13.3.

11.5.1 The acts or omissions of any third parties, including but not limited to **Other Contractors**, public/ governmental bodies (other than **City Agencies**), utilities or private enterprises, who are disclosed in the **Contract Documents** or are ordinarily encountered or generally recognized as related to the **Work**;

11.5.2 Any situation which was within the contemplation of the parties at the time of entering into the **Contract**, including any delay indicated or disclosed in the **Contract Documents** or that would be generally recognized by a reasonably prudent contractor as related to the nature of the **Work**, and/or the existence of any facility or appurtenance owned, operated or maintained by any third party, as indicated or disclosed in the **Contract Documents** or ordinarily encountered or generally recognized as related to the nature of the **Work**;

11.5.3 Restraining orders, injunctions or judgments issued by a court which were caused by a Contractor's submission, action or inaction or by a Contractor's **Means and Methods of Construction**, or by third parties, unless such order, injunction or judgment was the result of an act or omission by the **City**;

11.5.4 Any labor boycott, strike, picketing, lockout or similar situation;

11.5.5 Any shortages of supplies or materials, or unavailability of equipment, required by the **Contract Work**;

11.5.6 Climatic conditions, storms, floods, droughts, tidal waves, fires, hurricanes, earthquakes, landslides or other catastrophes or acts of God, or acts of war or of the public enemy or terrorist acts, including the **City's** reasonable responses thereto; and

11.5.7 **Extra Work** which does not significantly affect the overall completion of the **Contract**, reasonable delays in the review or issuance of change orders or field orders and/or in shop drawing reviews or approvals.

11.6 Required Content of Submission of Statement of Delay Damages

11.6.1 In the verified written statement of delay damages required by Article 11.1.2, the following information shall be provided by the **Contractor**:

11.6.1.1 For each delay, the start and end dates of the claimed periods of delay and, in addition, a description of the operations that were delayed, an explanation of how they were delayed, and the reasons for the delay, including identifying the applicable act or omission of the City listed in Article 11.4.

11.6.1.2 A detailed factual statement of the claim providing all necessary dates, locations and items of **Work** affected by the claim.

11.6.1.3 The estimated amount of additional compensation sought and a breakdown of that amount into categories as described in Article 11.7.

11.6.1.4 Any additional information requested by the **Commissioner**.

11.7 Recoverable Costs

11.7.1 Delay damages may be recoverable for the following costs actually and necessarily incurred in the performance of the **Work**:

11.7.1.1 Direct labor, including payroll taxes (subject to statutory wage caps) and supplemental benefits, based on time and materials records;

11.7.1.2 Necessary materials (including transportation to the **Site**), based on time and material records;

11.7.1.3 Reasonable rental value of necessary plant and equipment other than small tools, plus fuel/energy costs according to the applicable formula set forth in Articles 26.2.4 and/or 26.2.8, based on time and material records;

11.7.1.4 Additional insurance and bond costs;

11.7.1.5 Extended **Site** overhead, field office rental, salaries of field office staff, on-site project managers and superintendents, field office staff vehicles, **Project**-specific storage, field office utilities and telephone, and field office consumables;

11.7.1.6 Labor escalation costs based on actual costs;

11.7.1.7 Materials and equipment escalation costs based on applicable industry indices unless documentation of actual increased cost is provided;

11.7.1.8 Additional material and equipment storage costs based on actual documented costs and additional costs necessitated by extended manufacturer warranty periods; and

11.7.1.9 Extended home office overhead calculated based on the following formula:

(1) Subtract from the original **Contract** amount the amount earned by original contractual **Substantial Completion** date (not including change orders);

(2) Remove 15% overhead and profit from the calculation in item (1) by dividing the results of item (1) by 1.15;

(3) Multiply the result of item (2) by 7.25% for the total home office overhead;

(4) Multiply the result of item (3) by 7.25% for the total profit; and

(5) The total extended home office overhead will be the total of items (3) and (4).

11.7.2 Recoverable Subcontractor Costs. When the **Work** is performed by a **Subcontractor**, the **Contractor** may be paid the actual and necessary costs of such subcontracted **Work** as outlined above in Articles 11.7.1.1 through 11.7.1.8, and an additional overhead of 5% of the costs outlined in Articles 11.7.1.1 through 11.7.1.3.

11.7.3 Non-Recoverable Costs. The parties agree that the **City** will have no liability for the following items and the **Contractor** agrees it shall make no claim for the following items:

11.7.3.1 Profit, or loss of anticipated or unanticipated profit, except as provided in Article 11.7.1.9;

11.7.3.2 Consequential damages, including, but not limited to, construction or bridge loans or interest paid on such loans, loss of bonding capacity, bidding opportunities, or interest in investment, or any resulting insolvency;

11.7.3.3 Indirect costs or expenses of any nature except those included in Article 11.7.1;

11.7.3.4 Direct or indirect costs attributable to performance of **Work** where the **Contractor**, because of situations or conditions within its control, has not progressed the **Work** in a satisfactory manner; and

11.7.3.5 Attorneys' fees and dispute and claims preparation expenses.

11.8 Any claims for delay under this Article 11 are not subject to the jurisdiction of the Contract Dispute Resolution Board pursuant to the dispute resolution process set forth in Article 27.

11.9 Any compensation provided to the **Contractor** in accordance with this Article 11 will be made pursuant to a claim filed with the **Comptroller**. Nothing in this Article 11 extends the time for the **Contractor** to file an action with respect to a claim within six months after **Substantial Completion** pursuant to Article 56.

ARTICLE 12. COORDINATION WITH OTHER CONTRACTORS

12.1 During the progress of the **Work**, **Other Contractors** may be engaged in performing other work or may be awarded other contracts for additional work on this **Project**. In that event, the **Contractor** shall coordinate the **Work** to be done hereunder with the work of such **Other Contractors** and the **Contractor** shall fully cooperate with such **Other Contractors** and carefully fit its own **Work** to that provided under other contracts as may be directed by the **Engineer**. The **Contractor** shall not commit or permit any act which will interfere with the performance of work by any **Other Contractors**.

12.2 If the **Engineer** determines that the **Contractor** is failing to coordinate its **Work** with the work of **Other Contractors** as the **Engineer** has directed, then the **Commissioner** shall have the right to withhold any payments otherwise due hereunder until the **Contractor** completely complies with the **Engineer's** directions.

12.3 The **Contractor** shall notify the **Engineer** in writing if any **Other Contractor** on this **Project** is failing to coordinate its work with the **Work** of this **Contract**. If the **Engineer** finds such charges to be true, the **Engineer** shall promptly issue such directions to the **Other Contractor** with respect thereto as the situation may require. The **City** shall not, however, be liable for any damages suffered by any **Other Contractor's** failure to coordinate its work with the **Work** of this **Contract** or by reason of the **Other Contractor's** failure to promptly comply with the directions so issued by the **Engineer**, or by reason of any **Other Contractor's** default in performance, it being understood that the **City** does not guarantee the responsibility or continued efficiency of any contractor. The **Contractor** agrees to make no claim against the **City** for any damages relating to or arising out of any directions issued by the **Engineer** pursuant to this Article 12 (including but not limited to the failure of any **Other Contractor** to comply or promptly comply with such directions), or the failure of any **Other Contractor** to coordinate its work, or the default in performance of any **Other Contractor**.

12.4 The **Contractor** shall indemnify and hold the **City** harmless from any and all claims or judgments for damages and from costs and expenses to which the **City** may be subjected or which it may suffer or incur by reason of the **Contractor's** failure to comply with the **Engineer's** directions promptly; and the **Comptroller** shall have the right to exercise the powers reserved in Article 23 with respect to any claims which may be made for damages due to the **Contractor's** failure to comply with the **Engineer's** directions promptly. Insofar as the facts and **Law** relating to any claim would preclude the **City** from being completely indemnified by the **Contractor**, the **City** shall be partially indemnified by the **Contractor** to the fullest extent provided by **Law**.

12.5 Should the **Contractor** sustain any damage through any act or omission of any **Other Contractor** having a contract with the **City** for the performance of work upon the **Site** or of work which may be necessary to be performed for the proper prosecution of the **Work** to be performed hereunder, or through any act or omission of a subcontractor of such **Other Contractor**, the **Contractor** shall have no claim against the **City** for such damage, but shall have a right to recover such damage from the **Other**

Contractor under the provision similar to the following provisions which apply to this **Contract** and have been or will be inserted in the contracts with such **Other Contractors**:

12.5.1 Should any **Other Contractor** having or who shall hereafter have a contract with the **City** for the performance of work upon the **Site** sustain any damage through any act or omission of the **Contractor** hereunder or through any act or omission of any **Subcontractor** of the **Contractor**, the **Contractor** agrees to reimburse such **Other Contractor** for all such damages and to defend at its own expense any action based upon such claim and if any judgment or claim (even if the allegations of the action are without merit) against the **City** shall be allowed the **Contractor** shall pay or satisfy such judgment or claim and pay all costs and expenses in connection therewith and agrees to indemnify and hold the **City** harmless from all such claims. Insofar as the facts and **Law** relating to any claim would preclude the **City** from being completely indemnified by the **Contractor**, the **City** shall be partially indemnified by the **Contractor** to the fullest extent provided by **Law**.

12.6 The **City's** right to indemnification hereunder shall in no way be diminished, waived or discharged by its recourse to assessment of liquidated damages as provided in Article 15, or by the exercise of any other remedy provided for by **Contract** or by **Law**.

ARTICLE 13. EXTENSION OF TIME FOR PERFORMANCE

13.1 If performance by the **Contractor** is delayed for a reason set forth in Article 13.3, the **Contractor** may be allowed a reasonable extension of time in conformance with this Article 13 and the **PPB** Rules.

13.2 Any extension of time may be granted only by the **ACCO** or by the Board for the Extension of Time (hereafter "Board") (as set forth below) upon written application by the **Contractor**.

13.3 Grounds for Extension: If such application is made, the **Contractor** shall be entitled to an extension of time for delay in completion of the **Work** caused solely:

13.3.1 By the acts or omissions of the **City**, its officials, agents or employees; or

13.3.2 By the act or omissions of **Other Contractors** on this **Project**; or

13.3.3 By supervening conditions entirely beyond the control of either party hereto (such as, but not limited to, acts of God or the public enemy, excessive inclement weather, war or other national emergency making performance temporarily impossible or illegal, or strikes or labor disputes not brought about by any act or omission of the **Contractor**).

13.3.4 The **Contractor** shall, however, be entitled to an extension of time for such causes only for the number of **Days** of delay which the **ACCO** or the Board may determine to be due solely to such causes, and then only if the **Contractor** shall have strictly complied with all of the requirements of Articles 9 and 10.

13.4 The **Contractor** shall not be entitled to receive a separate extension of time for each of several causes of delay operating concurrently, but, if at all, only for the actual period of delay in completion of the **Work** as determined by the **ACCO** or the Board, irrespective of the number of causes contributing to produce such delay. If one of several causes of delay operating concurrently results from any act, fault or omission of the **Contractor** or of its **Subcontractors** or **Materialmen**, and would of itself (irrespective

of the concurrent causes) have delayed the **Work**, no extension of time will be allowed for the period of delay resulting from such act, fault or omission.

13.5 The determination made by the **ACCO** or the Board on an application for an extension of time shall be binding and conclusive on the **Contractor**.

13.6 The **ACCO** or the Board acting entirely within their discretion may grant an application for an extension of time for causes of delay other than those herein referred.

13.7 Permitting the **Contractor** to continue with the **Work** after the time fixed for its completion has expired, or after the time to which such completion may have been extended has expired, or the making of any payment to the **Contractor** after such time, shall in no way operate as a waiver on the part of the **City** of any of its rights under this **Contract.**

13.8 Application for Extension of Time:

13.8.1 Before the **Contractor's** time extension request will be considered, the **Contractor** shall notify the **ACCO** of the condition which allegedly has caused or is causing the delay, and shall submit a written application to the **ACCO** identifying:

13.8.1(a) The **Contractor**; the registration number; and **Project** description;

13.8.1(b) Liquidated damage assessment rate, as specified in the **Contract**;

13.8.1(c) Original total bid price;

13.8.1(d) The original **Contract** start date and completion date;

13.8.1(e) Any previous time extensions granted (number and duration); and

13.8.1(f) The extension of time requested.

13.8.2 In addition, the application for extension of time shall set forth in detail:

13.8.2(a) The nature of each alleged cause of delay in completing the **Work**;

13.8.2(b) The date upon which each such cause of delay began and ended and the number of **Days** attributable to each such cause;

13.8.2(c) A statement that the **Contractor** waives all claims except for those delineated in the application, and the particulars of any claims which the **Contractor** does not agree to waive. For time extensions for **Substantial Completion** and final completion payments, the application shall include a detailed statement of the dollar amounts of each element of claim item reserved; and

13.8.2(d) A statement indicating the **Contractor's** understanding that the time extension is granted only for purposes of permitting continuation of **Contract** performance and payment for **Work** performed and that the **City** retains its right to conduct an investigation and assess liquidated damages as appropriate in the future.

13.9 Analysis and Approval of Time Extensions:

13.9.1 For time extensions for partial payments, a written determination shall be made by the **ACCO** who may, for good and sufficient cause, extend the time for the performance of the **Contract** as follows:

13.9.1(a) If the **Work** is to be completed within six (6) months, the time for performance may be extended for sixty (60) **Days**;

13.9.1(b) If the **Work** is to be completed within less than one (1) year but more than six (6) months, an extension of ninety (90) **Days** may be granted;

13.9.1(c) If the **Contract** period exceeds one (1) year, besides the extension granted in Article 13.9.1(b), an additional thirty (30) **Days** may be granted for each multiple of six (6) months involved beyond the one (1) year period; or

13.9.1(d) If exceptional circumstances exist, the **ACCO** may extend the time for performance beyond the extensions in Articles 13.9.1(a), 13.9.1(b), and 13.9.1(c). In that event, the **ACCO** shall file with the Mayor's Office of Contract Services a written explanation of the exceptional circumstances.

13.9.2 For extensions of time for **Substantial Completion** and final completion payments, the **Engineer**, in consultation with the **ACCO**, shall prepare a written analysis of the delay (including a preliminary determination of the causes of delay, the beginning and end dates for each such cause of delay, and whether the delays are excusable under the terms of this **Contract**). The report shall be subject to review by and approval of the Board, which shall have authority to question its analysis and determinations and request additional facts or documentation. The report as reviewed and made final by the Board shall be made a part of the **Agency** contract file. Neither the report itself nor anything contained therein shall operate as a waiver or release of any claim the **City** may have against the **Contractor** for either actual or liquidated damages.

13.9.3 Approval Mechanism for Time Extensions for **Substantial Completion** or Final Completion Payments: An extension shall be granted only with the approval of the Board which is comprised of the **ACCO** of the **Agency**, the **City** Corporation Counsel, and the **Comptroller**, or their authorized representatives.

13.9.4 Neither the granting of any application for an extension of time to the **Contractor** or any **Other Contractor** on this **Project** nor the papers, records or reports related to any application for or grant of an extension of time or determination related thereto shall be referred to or offered in evidence by the **Contractor** or its attorneys in any action or proceeding.

13.10 No Damage for Delay: The **Contractor** agrees to make no claim for damages for delay in the performance of this **Contract** occasioned by any act or omission to act of the **City** or any of its representatives, except as provided for in Article 11.

ARTICLE 14. COMPLETION AND FINAL ACCEPTANCE OF THE WORK

14.1 Date for **Substantial Completion**: The **Contractor** shall substantially complete the **Work** within the time fixed in Schedule A of the General Conditions, or within the time to which such **Substantial Completion** may be extended.

14.2 Determining the Date of **Substantial Completion**: The **Work** will be deemed to be substantially complete when the two conditions set forth below have been met.

14.2.1 Inspection: The **Engineer** or **Resident Engineer**, as applicable, has inspected the **Work** and has made a written determination that it is substantially complete.

14.2.2 Approval of **Final Approved Punch List** and Date for **Final Acceptance**: Following inspection of the **Work**, the **Engineer/Resident Engineer** shall furnish the **Contractor** with a final punch list, specifying all items of **Work** to be completed and proposing dates for the completion of each specified item of **Work**. The **Contractor** shall then submit in writing to the **Engineer/Resident Engineer** within ten (10) **Days** of the **Engineer/Resident Engineer** furnishing the final punch list either acceptance of the dates or proposed alternative dates for the completion of each specified item of **Work**. If the **Contractor** neither accepts the dates nor proposes alternative dates within ten (10) **Days**, the schedule proposed by the **Engineer/Resident Engineer** shall be deemed accepted. If the **Contractor** proposes alternative dates, then, within a reasonable time after receipt, the **Engineer/Resident Engineer**, in a written notification to the **Contractor**, shall approve the **Contractor's** completion dates or, if they are unable to agree, the **Engineer/Resident Engineer** shall establish dates for the completion of each item of **Work**. The latest completion date specified shall be the date for **Final Acceptance** of the **Work**.

14.3 Date of **Substantial Completion**. The date of approval of the **Final Approved Punch List**, shall be the date of **Substantial Completion**. The date of approval of the **Final Approved Punch List** shall be either (a) if the **Contractor** approves the final punch list and proposed dates for completion furnished by the **Engineer/Resident Engineer**, the date of the **Contractor**'s approval; or (b) if the **Contractor** neither accepts the dates nor proposes alternative dates, ten (10) **Days** after the **Engineer/Resident Engineer** furnishes the **Contractor** with a final punch list and proposed dates for completion; or (c) if the **Contractor** proposes alternative dates, the date that the **Engineer/Resident Engineer** sends written notification to the **Contractor** either approving the **Contractor**'s proposed alternative dates or establishing dates for the completion for each item of **Work**.

14.4 Determining the Date of **Final Acceptance**: The **Work** will be accepted as final and complete as of the date of the **Engineer's/Resident Engineer**'s inspection if, upon such inspection, the **Engineer/Resident Engineer** finds that all items on the **Final Approved Punch List** are complete and no further **Work** remains to be done. The **Commissioner** will then issue a written determination of **Final Acceptance**.

14.5 Request for Inspection: Inspection of the **Work** by the **Engineer/Resident Engineer** for the purpose of **Substantial Completion** or **Final Acceptance** shall be made within fourteen (14) **Days** after receipt of the **Contractor's** written request therefor.

14.6 Request for Re-inspection: If upon inspection for the purpose of **Substantial Completion** or **Final Acceptance**, the **Engineer/Resident Engineer** determines that there are items of **Work** still to be performed, the **Contractor** shall promptly perform them and then request a re-inspection. If upon re-inspection, the **Engineer/Resident Engineer** determines that the **Work** is substantially complete or finally accepted, the date of such re-inspection shall be the date of **Substantial Completion** or **Final Acceptance**. Re-inspection by the **Engineer/Resident Engineer** shall be made within ten (10) **Days** after receipt of the **Contractor's** written request therefor.

14.7 Initiation of Inspection by the **Engineer/Resident Engineer**: If the **Contractor** does not request inspection or re-inspection of the **Work** for the purpose of **Substantial Completion** or **Final Acceptance**, the **Engineer/Resident Engineer** may initiate such inspection or re-inspection.

ARTICLE 15. LIQUIDATED DAMAGES

15.1 In the event the **Contractor** fails to substantially complete the **Work** within the time fixed for such **Substantial Completion** in Schedule A of the General Conditions, plus authorized time extensions, or if the **Contractor**, in the sole determination of the **Commissioner**, has abandoned the **Work**, the **Contractor** shall pay to the **City** the sum fixed in Schedule A of the General Conditions, for each and every **Day** that the time consumed in substantially completing the **Work** exceeds the time allowed therefor; which said sum, in view of the difficulty of accurately ascertaining the loss which the **City** will suffer by reason of delay in the **Substantial Completion** of the **Work** hereunder, is hereby fixed and agreed as the liquidated damages that the **City** will suffer by reason of such delay, and not as a penalty. This Article 15 shall also apply to the **Contractor** whether or not the **Contractor** is defaulted pursuant to Chapter X of this **Contract**. Neither the failure to assess liquidated damages nor the granting of any time extension shall operate as a waiver or release of any claim the **City** may have against the **Contractor** for either actual or liquidated damages.

15.2 Liquidated damages received hereunder are not intended to be nor shall they be treated as either a partial or full waiver or discharge of the **City's** right to indemnification, or the **Contractor's** obligation to indemnify the **City**, or to any other remedy provided for in this **Contract** or by **Law**.

15.3 The **Commissioner** may deduct and retain out of the monies which may become due hereunder, the amount of any such liquidated damages; and in case the amount which may become due hereunder shall be less than the amount of liquidated damages suffered by the **City**, the **Contractor** shall be liable to pay the difference.

ARTICLE 16. OCCUPATION OR USE PRIOR TO COMPLETION

16.1 Unless otherwise provided for in the **Specifications**, the **Commissioner** may take over, use, occupy or operate any part of the **Work** at any time prior to **Final Acceptance**, upon written notification to the **Contractor**. The **Engineer** or **Resident Engineer**, as applicable, shall inspect the part of the **Work** to be taken over, used, occupied, or operated, and will furnish the **Contractor** with a written statement of the **Work**, if any, which remains to be performed on such part. The **Contractor** shall not object to, nor interfere with, the **Commissioner's** decision to exercise the rights granted by Article 16. In the event the **Commissioner** takes over, uses, occupies, or operates any part of the **Work:**

16.1.1 the **Engineer/Resident Engineer** shall issue a written determination of **Substantial Completion** with respect to such part of the **Work**;

16.1.2 the **Contractor** shall be relieved of its absolute obligation to protect such part of the unfinished **Work** in accordance with Article 7;

16.1.3 the **Contractor's** guarantee on such part of the **Work** shall begin on the date of such use by the **City**; and;

16.1.4 the **Contractor** shall be entitled to a return of so much of the amount retained in accordance with Article 21 as it relates to such part of the **Work**, except so much thereof as may be retained under Articles 24 and 44.

CHAPTER IV: SUBCONTRACTS AND ASSIGNMENTS

ARTICLE 17. SUBCONTRACTS

17.1 The **Contractor** shall not make subcontracts totaling an amount more than the percentage of the total **Contract** price fixed in Schedule A of the General Conditions, without prior written permission from the **Commissioner**. All subcontracts made by the **Contractor** shall be in writing. No **Work** may be performed by a **Subcontractor** prior to the **Contractor** entering into a written subcontract with the **Subcontractor** and complying with the provisions of this Article 17.

17.2 Before making any subcontracts, the **Contractor** shall submit a written statement to the **Commissioner** giving the name and address of the proposed **Subcontractor**; the portion of the **Work** and materials which it is to perform and furnish; the cost of the subcontract; the VENDEX questionnaire if required; the proposed subcontract if requested by the **Commissioner**; and any other information tending to prove that the proposed **Subcontractor** has the necessary facilities, skill, integrity, past experience, and financial resources to perform the **Work** in accordance with the terms and conditions of this **Contract**.

17.3 In addition to the requirements in Article 17.2, **Contractor** is required to list the **Subcontractor** in the web based Subcontractor Reporting System through the City's Payee Information Portal (PIP), available at www.nyc.gov/pip.[1] For each **Subcontractor** listed, **Contractor** is required to provide the following information: maximum contract value, description of **Subcontractor's** Work, start and end date of the subcontract and identification of the **Subcontractor**'s industry. Thereafter, **Contractor** will be required to report in the system the payments made to each **Subcontractor** within 30 days of making the payment. If any of the required information changes throughout the Term of the **Contract, Contractor** will be required to revise the information in the system.

Failure of the **Contractor** to list a **Subcontractor** and/or to report **Subcontractor** payments in a timely fashion may result in the **Commissioner** declaring the **Contractor** in default of the **Contract** and will subject **Contractor** to liquidated damages in the amount of $100 per day for each day that the **Contractor** fails to identify a **Subcontractor** along with the required information about the **Subcontractor** and/or fails to report payments to a **Subcontractor**, beyond the time frames set forth herein or in the notice from the **City**. Article 15 shall govern the issue of liquidated damages.

17.4 If an approved **Subcontractor** elects to subcontract any portion of its subcontract, the proposed sub-subcontract shall be submitted in the same manner as directed above.

17.5 The **Commissioner** will notify the **Contractor** in writing whether the proposed **Subcontractor** is approved. If the proposed **Subcontractor** is not approved, the **Contractor** may submit another proposed **Subcontractor** unless the **Contractor** decides to do the **Work**. No **Subcontractor** shall be permitted to enter or perform any work on the **Site** unless approved.

17.6 Before entering into any subcontract hereunder, the **Contractor** shall provide the proposed **Subcontractor** with a complete copy of this document and inform the proposed **Subcontractor** fully and completely of all provisions and requirements of this **Contract** relating either directly or indirectly to the **Work** to be performed and the materials to be furnished under such subcontract, and every such

[1] In order to use the new system, a PIP account will be required. Detailed instructions on creating a PIP account and using the new system are also available at www.nyc.gov/pip. Additional assistance with PIP may be obtained by emailing the Financial Information Services Agency Help Desk at pip@fisa.nyc.gov.

Subcontractor shall expressly stipulate that all labor performed and materials furnished by the **Subcontractor** shall strictly comply with the requirements of this **Contract**.

17.7 Documents given to a prospective **Subcontractor** for the purpose of soliciting the **Subcontractor's** bid shall include either a copy of the bid cover or a separate information sheet setting forth the **Project** name, the **Contract** number (if available), the **Agency** (as noted in Article 2.1.6), and the **Project's** location.

17.8 The **Commissioner's** approval of a **Subcontractor** shall not relieve the **Contractor** of any of its responsibilities, duties, and liabilities hereunder. The **Contractor** shall be solely responsible to the **City** for the acts or defaults of its **Subcontractor** and of such **Subcontractor's** officers, agents, and employees, each of whom shall, for this purpose, be deemed to be the agent or employee of the **Contractor** to the extent of its subcontract.

17.9 If the **Subcontractor** fails to maintain the necessary facilities, skill, integrity, past experience, and financial resources (other than due to the **Contractor's** failure to make payments where required) to perform the **Work** in accordance with the terms and conditions of this **Contract**, the **Contractor** shall promptly notify the **Commissioner** and replace such **Subcontractor** with a newly approved **Subcontractor** in accordance with this Article 17.

17.10 The **Contractor** shall be responsible for ensuring that all **Subcontractors** performing **Work** at the **Site** maintain all insurance required by **Law**.

17.11 The **Contractor** shall promptly, upon request, file with the **Engineer** a conformed copy of the subcontract and its cost. The subcontract shall provide the following:

17.11.1 Payment to **Subcontractors**: The agreement between the **Contractor** and its **Subcontractor** shall contain the same terms and conditions as to method of payment for **Work**, labor, and materials, and as to retained percentages, as are contained in this **Contract**.

17.11.2 Prevailing Rate of Wages: The agreement between the **Contractor** and its **Subcontractor** shall include the prevailing wage rates and supplemental benefits to be paid in accordance with Labor Law Section 220.

17.11.3 Section 6-123 of the Administrative Code: Pursuant to the requirements of Section 6-123 of the Administrative Code, every agreement between the **Contractor** and a **Subcontractor** in excess of fifty thousand ($50,000) dollars shall include a provision that the **Subcontractor** shall not engage in any unlawful discriminatory practice as defined in Title VIII of the Administrative Code (Section 8-101 *et seq.*).

17.11.4 All requirements required pursuant to federal and/or state grant agreement(s), if applicable to the **Work**.

17.12 The **Commissioner** may deduct from the amounts certified under this **Contract** to be due to the **Contractor**, the sum or sums due and owing from the **Contractor** to the **Subcontractors** according to the terms of the said subcontracts, and in case of dispute between the **Contractor** and its **Subcontractor**, or **Subcontractors**, as to the amount due and owing, the **Commissioner** may deduct and withhold from the amounts certified under this **Contract** to be due to the **Contractor** such sum or sums as may be claimed by such **Subcontractor**, or **Subcontractors**, in a sworn affidavit, to be due and owing until such time as such claim or claims shall have been finally resolved.

17.13 On contracts where performance bonds and payment bonds are executed, the **Contractor** shall include on each requisition for payment the following data: **Subcontractor's** name, value of the subcontract, total amount previously paid to **Subcontractor** for **Work** previously requisitioned, and the amount, including retainage, to be paid to the **Subcontractor** for **Work** included in the requisition.

17.14 On **Contracts** where performance bonds and payment bonds are not executed, the **Contractor** shall include with each requisition for payment submitted hereunder, a signed statement from each and every **Subcontractor** and/or **Materialman** for whom payment is requested in such requisition. Such signed statement shall be on the letterhead of the **Subcontractor** and/or **Materialman** for whom payment is requested and shall (i) verify that such **Subcontractor** and/or **Materialman** has been paid in full for all **Work** performed and/or material supplied to date, exclusive of any amount retained and any amount included on the current requisition, and (ii) state the total amount of retainage to date, exclusive of any amount retained on the current requisition.

ARTICLE 18. ASSIGNMENTS

18.1 The **Contractor** shall not assign, transfer, convey or otherwise dispose of this **Contract**, or the right to execute it, or the right, title or interest in or to it or any part thereof, or assign, by power of attorney or otherwise any of the monies due or to become due under this **Contract**, unless the previous written consent of the **Commissioner** shall first be obtained thereto, and the giving of any such consent to a particular assignment shall not dispense with the necessity of such consent to any further or other assignments.

18.2 Such assignment, transfer, conveyance or other disposition of this **Contract** shall not be valid until filed in the office of the **Commissioner** and the **Comptroller**, with the written consent of the **Commissioner** endorsed thereon or attached thereto.

18.3 Failure to obtain the previous written consent of the **Commissioner** to such an assignment, transfer, conveyance or other disposition, may result in the revocation and annulment of this **Contract**. The **City** shall thereupon be relieved and discharged from any further liability to the **Contractor**, its assignees, transferees or sublessees, who shall forfeit and lose all monies therefor earned under the **Contract**, except so much as may be required to pay the **Contractor's** employees.

18.4 The provisions of this clause shall not hinder, prevent, or affect an assignment by the **Contractor** for the benefit of its creditors made pursuant to the **Laws** of the State of New York.

18.5 This **Contract** may be assigned by the **City** to any corporation, agency or instrumentality having authority to accept such assignment.

CHAPTER V: CONTRACTOR'S SECURITY AND GUARANTEE

ARTICLE 19. SECURITY DEPOSIT

19.1 If performance and payment bonds are required, the **City** shall retain the bid security to ensure that the successful bidder executes the **Contract** and furnishes the required payment and performance security within ten (10) **Days** after notice of the award of the **Contract**. If the successful bidder fails to execute the **Contract** and furnish the required payment and performance security, the **City** shall retain such bid security as set forth in the Information for Bidders. If the successful bidder executes the

Contract and furnishes the required payment and performance security, the **City** shall return the bid security within a reasonable time after the furnishing of such bonds and execution of the **Contract** by the **City**.

19.2 If performance and payment bonds are not required, the bid security shall be retained by the **City** as security for the **Contractor**'s faithful performance of the **Contract**. If partial payments are provided, the bid security will be returned to the **Contractor** after the sum retained under Article 21 equals the amount of the bid security, subject to other provisions of this **Contract**. If partial payments are not provided, the bid security will be released when final payment is certified by the **City** for payment.

19.3 If the **Contractor** is declared in default under Article 48 prior to the return of the deposit, or if any claim is made such as referred to in Article 23, the amount of such deposit, or so much thereof as the **Comptroller** may deem necessary, may be retained and then applied by the **Comptroller**:

19.3.1 To compensate the **City** for any expense, loss or damage suffered or incurred by reason of or resulting from such default, including the cost of re-letting and liquidated damages; or

19.3.2 To indemnify the **City** against any and all claims.

ARTICLE 20. PAYMENT GUARANTEE

20.1 On **Contracts** where one hundred (100%) percent performance bonds and payment bonds are executed, this Article 20 does not apply.

20.2 In the event the terms of this **Contract** do not require the **Contractor** to provide a payment bond or where the **Contract** does not require a payment bond for one hundred (100%) percent of the **Contract** price, the **City** shall, in accordance with the terms of this Article 20, guarantee payment of all lawful claims for:

20.2.1 Wages and compensation for labor performed and/or services rendered; and

20.2.2 Materials, equipment, and supplies provided, whether incorporated into the **Work** or not, when demands have been filed with the **City** as provided hereinafter by any person, firm, or corporation which furnished labor, material, equipment, supplies, or any combination thereof, in connection with the **Work** performed hereunder (hereinafter referred to as the "beneficiary") at the direction of the **City** or the **Contractor**.

20.3 The provisions of Article 20.2 are subject to the following limitations and conditions:

20.3.1 If the **Contractor** provides a payment bond for a value that is less than one hundred (100%) percent of the value of the **Contract Work**, the payment bond provided by the **Contractor** shall be primary (and non-contributing) to the payment guarantee provided under this Article 20.

20.3.2 The guarantee is made for the benefit of all beneficiaries as defined in Article 20.2 provided that those beneficiaries strictly adhere to the terms and conditions of Article 20.3.4 and 20.3.5.

20.3.3 Nothing in this Article 20 shall prevent a beneficiary providing labor, services or material for the **Work** from suing the **Contractor** for any amounts due and owing the beneficiary by the **Contractor**.

20.3.4 Every person who has furnished labor or material, to the **Contractor** or to a **Subcontractor** of the **Contractor**, in the prosecution of the **Work** and who has not been paid in full therefor before the expiration of a period of ninety (90) **Days** after the date on which the last of the labor was performed or material was furnished by him/her for which the claim is made, shall have the right to sue on this payment guarantee in his/her own name for the amount, or the balance thereof, unpaid at the time of commencement of the action; provided, however, that a person having a direct contractual relationship with a **Subcontractor** of the **Contractor** but no contractual relationship express or implied with the **Contractor** shall not have a right of action upon the guarantee unless he/she shall have given written notice to the **Contractor** within one hundred twenty (120) **Days** from the date on which the last of the labor was performed or the last of the material was furnished, for which his/her claim is made, stating with substantial accuracy the amount claimed and the name of the party to whom the material was furnished or for whom the labor was performed. The notice shall be served by delivering the same personally to the **Contractor** or by mailing the same by registered mail, postage prepaid, in an envelope addressed to the **Contractor** at any place where it maintains an office or conducts its business; provided, however, that where such notice is actually received by the **Contractor** by other means, such notice shall be deemed sufficient.

20.3.5 Except as provided in Labor Law Section 220-g, no action on this payment guarantee shall be commenced after the expiration of the one-year limitations period set forth in Section 137(4)(b) of the State Finance Law.

20.3.6 The **Contractor** shall promptly forward to the **City** any notice or demand received pursuant to Article 20.3.4. The **Contractor** shall inform the **City** of any defenses to the notice or demand and shall forward to the **City** any documents the **City** requests concerning the notice or demand.

20.3.7 All demands made against the **City** by a beneficiary of this payment guarantee shall be presented to the **Engineer** along with all written documentation concerning the demand which the **Engineer** deems reasonably appropriate or necessary, which may include, but shall not be limited to: the subcontract; any invoices presented to the **Contractor** for payment; the notarized statement of the beneficiary that the demand is due and payable, that a request for payment has been made of the **Contractor** and that the demand has not been paid by the **Contractor** within the time allowed for such payment by the subcontract; and copies of any correspondence between the beneficiary and the **Contractor** concerning such demand. The **City** shall notify the **Contractor** that a demand has been made. The **Contractor** shall inform the **City** of any defenses to the demand and shall forward to the **City** any documents the **City** requests concerning the demand.

20.3.8 The **City** shall make payment only if, after considering all defenses presented by the **Contractor**, it determines that the payment is due and owing to the beneficiary making the demand.

20.3.9 No beneficiary shall be entitled to interest from the **City**, or to any other costs, including, but not limited to, attorneys' fees, except to the extent required by State Finance Law Section 137.

20.4 Upon the receipt by the **City** of a demand pursuant to this Article 20, the **City** may withhold from any payment otherwise due and owing to the **Contractor** under this **Contract** an amount sufficient to satisfy the demand.

20.4.1 In the event the **City** determines that the demand is valid, the **City** shall notify the **Contractor** of such determination and the amount thereof and direct the **Contractor** to immediately pay such amount to the beneficiary. In the event the **Contractor**, within seven (7) **Days** of receipt of such notification from the **City**, fails to pay the beneficiary, such failure shall constitute an automatic and irrevocable assignment of payment by the **Contractor** to the beneficiary for the amount of the demand determined by the **City** to be valid. The **Contractor**, without further notification or other process, hereby gives its unconditional consent to such assignment of payment to the beneficiary and authorizes the **City**, on its behalf, to take all necessary actions to implement such assignment of payment, including without limitation the execution of any instrument or documentation necessary to effectuate such assignment.

20.4.2In the event that the amount otherwise due and owing to the **Contractor** by the **City** is insufficient to satisfy such demand, the **City** may, at its option, require payment from the **Contractor** of an amount sufficient to cover such demand and exercise any other right to require or recover payment which the **City** may have under **Law** or **Contract**.

20.4.3 In the event the **City** determines that the demand is invalid, any amount withheld pending the **City**'s review of such demand shall be paid to the **Contractor**; provided, however, no lien has been filed. In the event a claim or an action has been filed, the terms and conditions set forth in Article 23 shall apply. In the event a lien has been filed, the parties will be governed by the provisions of the Lien Law of the State of New York.

20.5 The provisions of this Article 20 shall not prevent the **City** and the **Contractor** from resolving disputes in accordance with the **PPB** Rules, where applicable.

20.6 In the event the **City** determines that the beneficiary is entitled to payment pursuant to this Article 20, such determination and any defenses and counterclaims raised by the **Contractor** shall be taken into account in evaluating the **Contractor's** performance.

20.7 Nothing in this Article 20 shall relieve the **Contractor** of the obligation to pay the claims of all persons with valid and lawful claims against the **Contractor** relating to the **Work**.

20.8 The **Contractor** shall not require any performance, payment or other bonds of any **Subcontractor** if this **Contract** does not require such bonds of the **Contractor**.

20.9 The payment guarantee made pursuant to this Article 20 shall be construed in a manner consistent with Section 137 of the State Finance Law and shall afford to persons furnishing labor or materials to the **Contractor** or its **Subcontractors** in the prosecution of the **Work** under this **Contract** all of the rights and remedies afforded to such persons by such section, including but not limited to, the right to commence an action against the **City** on the payment guarantee provided by this Article 20 within the one-year limitations period set forth in Section 137(4)(b).

ARTICLE 21. RETAINED PERCENTAGE

21.1 If this **Contract** requires one hundred (100%) percent performance and payment security, then as further security for the faithful performance of this **Contract**, the **Commissioner** shall deduct, and

retain until the substantial completion of the **Work**, five (5%) percent of the value of **Work** certified for payment in each partial payment voucher.

21.2 If this **Contract** does not require one hundred (100%) percent performance and payment security and if the price for which this **Contract** was awarded does not exceed one million ($1,000,000) dollars, then as further security for the faithful performance of this **Contract**, the **Commissioner** shall deduct, and retain until the substantial completion of the **Work**, five (5%) percent of the value of **Work** certified for payment in each partial payment voucher.

21.3 If this **Contract** does not require one hundred (100%) percent performance and payment security and if the price for which this **Contract** was awarded exceeds one million ($1,000,000) dollars, then as further security for the faithful performance of this **Contract**, the **Commissioner** shall deduct, and retain until the substantial completion of the **Work**, up to ten (10%) percent of the value of **Work** certified for payment in each partial payment voucher. The percentage to be retained is set forth in Schedule A of the General Conditions.

ARTICLE 22. INSURANCE

22.1 Types of Insurance: The **Contractor** shall procure and maintain the following types of insurance if, and as indicated, in Schedule A of the General Conditions (with the minimum limits and special conditions specified in Schedule A). Such insurance shall be maintained from the date the **Contractor** is required to provide Proof of Insurance pursuant to Article 22.3.1 through the date of completion of all required **Work** (including punch list work as certified in writing by the **Resident Engineer**), except for insurance required pursuant to Article 22.1.4, which may terminate upon **Substantial Completion** of the **Contract**. All insurance shall meet the requirements set forth in this Article 22. Wherever this Article requires that insurance coverage be "at least as broad" as a specified form (including all ISO forms), there is no obligation that the form itself be used, provided that the **Contractor** can demonstrate that the alternative form or endorsement contained in its policy provides coverage at least as broad as the specified form.

22.1.1 Commercial General Liability Insurance: The **Contractor** shall provide Commercial General Liability Insurance covering claims for property damage and/or bodily injury, including death, which may arise from any of the operations under this **Contract**. Coverage under this insurance shall be at least as broad as that provided by the latest edition of Insurance Services Office ("ISO") Form CG 0001. Such insurance shall be "occurrence" based rather than "claims-made" and include, without limitation, the following types of coverage: premises operations; products and completed operations; contractual liability (including the tort liability of another assumed in a contract); broad form property damage; independent contractors; explosion, collapse and underground (XCU); construction means and methods; and incidental malpractice. Such insurance shall contain a "per project" aggregate limit, as specified in Schedule A, that applies separately to operations under this **Contract**.

22.1.1(a) Such Commercial General Liability Insurance shall name the **City** as an Additional Insured. Coverage for the City shall specifically include the **City's** officials and employees, be at least as broad as the latest edition of ISO Form CG 20 10 and provide completed operations coverage at least as broad as the latest edition of ISO Form CG 20 37.

22.1.1(b) Such Commercial General Liability Insurance shall name all other entities designated as additional insureds in Schedule A but only for claims arising from the

Contractor's operations under this **Contract**, with coverage at least as broad as the latest edition of ISO Form CG 20 26.

22.1.1(c) If the **Work** requires a permit from the Department of Buildings pursuant to 1 RCNY Section 101-08, the **Contractor** shall provide Commercial General Liability Insurance with limits of at least those required by 1 RCNY section 101-08 or greater limits required by the Agency in accordance with Schedule A. If the **Work** does not require such a permit, the minimum limits shall be those provided for in Schedule A.

22.1.1(d) If any of the **Work** includes repair of a waterborne vessel owned by or to be delivered to the **City**, such Commercial General Liability shall include, or be endorsed to include, Ship Repairer's Legal Liability Coverage to protect against, without limitation, liability arising from navigation of such vessels prior to delivery to and acceptance by the **City**.

22.1.2 Workers' Compensation Insurance, Employers' Liability Insurance, and Disability Benefits Insurance: The **Contractor** shall provide, and shall cause its **Subcontractors** to provide, Workers Compensation Insurance, Employers' Liability Insurance, and Disability Benefits Insurance in accordance with the **Laws** of the State of New York on behalf of all employees providing services under this **Contract** (except for those employees, if any, for which the **Laws** require insurance only pursuant to Article 22.1.3).

22.1.3 United States Longshoremen's and Harbor Workers Act and/or Jones Act Insurance: If specified in Schedule A of the General Conditions or if required by **Law**, the **Contractor** shall provide insurance in accordance with the United States Longshoremen's and Harbor Workers Act and/or the Jones Act, on behalf of all qualifying employees providing services under this **Contract**.

22.1.4 Builders Risk Insurance: If specified in Schedule A of the General Conditions, the **Contractor** shall provide Builders Risk Insurance on a completed value form for the total value of the **Work** through **Substantial Completion** of the **Work** in its entirety. Such insurance shall be provided on an All Risk basis and include coverage, without limitation, for windstorm (including named windstorm), storm surge, flood and earth movement. Unless waived by the **Commissioner**, it shall include coverage for ordinance and law, demolition and increased costs of construction, debris removal, pollutant clean up and removal, and expediting costs. Such insurance shall cover, without limitation, (a) all buildings and/or structures involved in the **Work**, as well as temporary structures at the **Site**, and (b) any property that is intended to become a permanent part of such building or structure, whether such property is on the **Site**, in transit or in temporary storage. Policies shall name the **Contractor** as Named Insured and list the **City** as both an Additional Insured and a Loss Payee as its interest may appear.

22.1.4(a) Policies of such insurance shall specify that, in the event a loss occurs at an occupied facility, occupancy of such facility is permitted without the consent of the issuing insurance company.

22.1.4(b) Such insurance may be provided through an Installation Floater, at the **Contractor's** option, if it otherwise conforms with the requirements of this Article 22.1.4.

22.1.5 Commercial Automobile Liability Insurance: The **Contractor** shall provide Commercial Automobile Liability Insurance for liability arising out of ownership,

maintenance or use of any owned (if any), non-owned and hired vehicles to be used in connection with this **Contract**. Coverage shall be at least as broad as the latest edition of ISO Form CA0001. If vehicles are used for transporting hazardous materials, the Automobile Liability Insurance shall be endorsed to provide pollution liability broadened coverage for covered vehicles (endorsement CA 99 48) as well as proof of MCS 90.

22.1.6 Contractors Pollution Liability Insurance: If specified in Schedule A of the General Conditions, the **Contractor** shall maintain, or cause the **Subcontractor** doing such **Work** to maintain, Contractors Pollution Liability Insurance covering bodily injury and property damage. Such insurance shall provide coverage for actual, alleged or threatened emission, discharge, dispersal, seepage, release or escape of pollutants (including asbestos), including any loss, cost or expense incurred as a result of any cleanup of pollutants (including asbestos) or in the investigation, settlement or defense of any claim, action, or proceedings arising from the operations under this **Contract**. Such insurance shall be in the **Contractor's** name and list the **City** as an Additional Insured and any other entity specified in Schedule A. Coverage shall include, without limitation, (a) loss of use of damaged property or of property that has not been physically injured, (b) transportation, and (c) non-owned disposal sites.

22.1.6(a) Coverage for the **City** as Additional Insured shall specifically include the **City's** officials and employees and be at least as broad as provided to the **Contractor** for this **Project**.

22.1.6(b) If such insurance is written on a claims-made policy, such policy shall have a retroactive date on or before the effective date of this **Contract**, and continuous coverage shall be maintained, or an extended discovery period exercised, for a period of not less than three (3) years from the time the **Work** under this **Contract** is completed.

22.1.7 Marine Insurance:

22.1.7(a) Marine Protection and Indemnity Insurance: If specified in Schedule A of the General Conditions or if the **Contractor** engages in marine operations in the execution of any part of the **Work**, the **Contractor** shall maintain, or cause the **Subcontractor** doing such Work to maintain, Marine Protection and Indemnity Insurance with coverage at least as broad as Form SP-23. The insurance shall provide coverage for the **Contractor** or **Subcontractor** (whichever is doing this **Work**) and for the **City** (together with its officials and employees) and any other entity specified in Schedule A as an Additional Insured for bodily injury and property damage arising from marine operations under this **Contract**. Coverage shall include, without limitation, injury or death of crew members (if not fully provided through other insurance), removal of wreck, damage to piers, wharves and other fixed or floating objects and loss of or damage to any other vessel or craft, or to property on such other vessel or craft.

22.1.7(b) Hull and Machinery Insurance: If specified in Schedule A of the General Conditions or if the **Contractor** engages in marine operations in the execution of any part of the **Work**, the **Contractor** shall maintain, or cause the **Subcontractor** doing such **Work** to maintain, Hull and Machinery Insurance with coverage for the **Contractor** or **Subcontractor** (whichever is doing this Work) and for the **City** (together with its officials and employees) as Additional Insured at least as broad as the latest edition of American Institute Tug Form for all tugs used under this

Contract and Collision Liability at least as broad as the latest edition of American Institute Hull Clauses.

22.1.7(c) Marine Pollution Liability Insurance: If specified in Schedule A of the General Conditions or if the **Contractor** engages in marine operations in the execution of any part of the **Work**, the **Contractor** shall maintain, or cause the **Subcontractor** doing such Work to maintain, Marine Pollution Liability Insurance covering itself (or the Subcontractor doing such Work) as Named Insured and the **City** (together with its officials and employees) and any other entity specified in Schedule A as an Additional Insured. Coverage shall be at least as broad as that provided by the latest edition of Water Quality Insurance Syndicate Form and include, without limitation, liability arising from the discharge or substantial threat of a discharge of oil, or from the release or threatened release of a hazardous substance including injury to, or economic losses resulting from, the destruction of or damage to real property, personal property or natural resources.

22.1.8 The **Contractor** shall provide such other types of insurance, at such minimum limits and with such conditions, as are specified in Schedule A of the General Conditions.

22.2 General Requirements for Insurance Coverage and Policies:

22.2.1 All required insurance policies shall be maintained with companies that may lawfully issue the required policy and have an A.M. Best rating of at least A-/VII or a Standard and Poor's rating of at least A, unless prior written approval is obtained from the **City** Corporation Counsel.

22.2.2 The **Contractor** shall be solely responsible for the payment of all premiums for all required policies and all deductibles and self-insured retentions to which such policies are subject, whether or not the **City** is an insured under the policy.

22.2.3 In his/her sole discretion, the **Commissioner** may, subject to the approval of the **Comptroller** and the **City** Corporation Counsel, accept Letters of Credit and/or custodial accounts in lieu of required insurance.

22.2.4 The **City's** limits of coverage for all types of insurance required pursuant to Schedule A of the General Conditions shall be the greater of (i) the minimum limits set forth in Schedule A or (ii) the limits provided to the **Contractor** as Named Insured under all primary, excess, and umbrella policies of that type of coverage.

22.2.5 The **Contractor** may satisfy its insurance obligations under this Article 22 through primary policies or a combination of primary and excess/umbrella policies, so long as all policies provide the scope of coverage required herein.

22.2.6 Policies of insurance provided pursuant to this Article 22 shall be primary and non-contributing to any insurance or self-insurance maintained by the **City**.

22.3 Proof of Insurance:

22.3.1 For all types of insurance required by Article 22.1 and Schedule A, except for insurance required by Articles 22.1.4 and 22.1.7, the **Contractor** shall file proof of insurance in accordance with this Article 22.3 within ten (10) **Days** of award. For insurance

provided pursuant to Articles 22.1.4 and 22.1.7, proof shall be filed by a date specified by the **Commissioner** or ten (10) **Days** prior to the commencement of the portion of the **Work** covered by such policy, whichever is earlier.

22.3.2 For Workers' Compensation Insurance provided pursuant to Article 22.1.2, the **Contractor** shall submit one of the following forms: C-105.2 Certificate of Workers' Compensation Insurance; U-26.3 - State Insurance Fund Certificate of Workers' Compensation Insurance; Request for WC/DB Exemption (Form CE-200); equivalent or successor forms used by the New York State Workers' Compensation Board; or other proof of insurance in a form acceptable to the **Commissioner**. For Disability Benefits Insurance provided pursuant to Article 22.1.2, the Contractor shall submit DB-120.1 - Certificate Of Insurance Coverage Under The NYS Disability Benefits Law, Request for WC/DB Exemption (Form CE-200); equivalent or successor forms used by the New York State Workers' Compensation Board; or other proof of insurance in a form acceptable to the **Commissioner**. ACORD forms are not acceptable.

22.3.3 For policies provided pursuant to all of Article 22.1 other than Article 22.1.2, the **Contractor** shall submit one or more Certificates of Insurance on forms acceptable to the **Commissioner**. All such Certificates of Insurance shall certify (a) the issuance and effectiveness of such policies of insurance, each with the specified minimum limits (b) for insurance secured pursuant to Article 22.1.1 that the **City** and any other entity specified in Schedule A is an Additional Insured thereunder; (c) in the event insurance is required pursuant to Article 22.1.6 and/or Article 22.1.7, that the City is an Additional Insured thereunder; (d) the company code issued to the insurance company by the National Association of Insurance Commissioners (the NAIC number); and (e) the number assigned to the **Contract** by the **City**. All such Certificates of Insurance shall be accompanied by either a duly executed "Certification by Insurance Broker or Agent" in the form contained in Part III of Schedule A or copies of all policies referenced in such Certificate of Insurance as certified by an authorized representative of the issuing insurance carrier. If any policy is not available at the time of submission, certified binders may be submitted until such time as the policy is available, at which time a certified copy of the policy shall be submitted.

22.3.4 Documentation confirming renewals of insurance shall be submitted to the **Commissioner** prior to the expiration date of coverage of policies required under this **Contract**. Such proofs of insurance shall comply with the requirements of Articles 22.3.2 and 22.3.3.

22.3.5 The **Contractor** shall be obligated to provide the **City** with a copy of any policy of insurance provided pursuant to this Article 22 upon the demand for such policy by the **Commissioner** or the **City** Corporation Counsel.

22.4 Operations of the **Contractor**:

22.4.1 The **Contractor** shall not commence the **Work** unless and until all required certificates have been submitted to and accepted by the **Commissioner**. Acceptance by the **Commissioner** of a certificate does not excuse the **Contractor** from securing insurance consistent with all provisions of this Article 22 or of any liability arising from its failure to do so.

22.4.2 The **Contractor** shall be responsible for providing continuous insurance coverage in the manner, form, and limits required by this **Contract** and shall be authorized to perform **Work** only during the effective period of all required coverage.

22.4.3 In the event that any of the required insurance policies lapse, are revoked, suspended or otherwise terminated, for whatever cause, the **Contractor** shall immediately stop all **Work**, and shall not recommence **Work** until authorized in writing to do so by the **Commissioner**. Upon quitting the **Site**, except as otherwise directed by the **Commissioner**, the **Contractor** shall leave all plant, materials, equipment, tools, and supplies on the **Site**. **Contract** time shall continue to run during such periods and no extensions of time will be granted. The **Commissioner** may also declare the **Contractor** in default for failure to maintain required insurance.

22.4.4 In the event the **Contractor** receives notice, from an insurance company or other person, that any insurance policy required under this Article 22 shall be cancelled or terminated (or has been cancelled or terminated) for any reason, the **Contractor** shall immediately forward a copy of such notice to both the **Commissioner** and the New York City Comptroller, attn: Office of Contract Administration, Municipal Building, One Centre Street, room 1005, New York, New York 10007. Notwithstanding the foregoing, the **Contractor** shall ensure that there is no interruption in any of the insurance coverage required under this Article 22.

22.4.5 Where notice of loss, damage, occurrence, accident, claim or suit is required under an insurance policy maintained in accordance with this Article 22, the **Contractor** shall notify in writing all insurance carriers that issued potentially responsive policies of any such event relating to any operations under this **Contract** (including notice to Commercial General Liability insurance carriers for events relating to the **Contractor**'s own employees) no later than 20 days after such event. For any policy where the **City** is an Additional Insured, such notice shall expressly specify that "this notice is being given on behalf of the City of New York as Insured as well as the Named Insured." Such notice shall also contain the following information: the number of the insurance policy, the name of the named insured, the date and location of the damage, occurrence, or accident, and the identity of the persons or things injured, damaged or lost. The **Contractor** shall simultaneously send a copy of such notice to the City of New York c/o Insurance Claims Specialist, Affirmative Litigation Division, New York City Law Department, 100 Church Street, New York, New York 10007.

22.4.6 In the event of any loss, accident, claim, action, or other event that does or can give rise to a claim under any insurance policy required under this Article 22, the **Contractor** shall at all times fully cooperate with the **City** with regard to such potential or actual claim.

22.5 **Subcontractor** Insurance: In the event the **Contractor** requires any **Subcontractor** to procure insurance with regard to any operations under this **Contract** and requires such **Subcontractor** to name the **Contractor** as an **Additional Insured** thereunder, the **Contractor** shall ensure that the **Subcontractor** name the **City**, including its officials and employees, as an Additional Insured with coverage at least as broad as the most recent edition of ISO Form CG 20 26.

22.6 Wherever reference is made in Article 7 or this Article 22 to documents to be sent to the **Commissioner** (e.g., notices, filings, or submissions), such documents shall be sent to the address set forth in Schedule A of the General Conditions. In the event no address is set forth in Schedule A, such documents are to be sent to the **Commissioner's** address as provided elsewhere in this **Contract**.

22.7 Apart from damages or losses covered by insurance provided pursuant to Articles 22.1.2, 22.1.3, or 22.1.5, the **Contractor** waives all rights against the **City**, including its officials and employees, for any damages or losses that are covered under any insurance required under this Article 22 (whether or

not such insurance is actually procured or claims are paid thereunder) or any other insurance applicable to the operations of the **Contractor** and/or its employees, agents, or **Subcontractors**.

22.8 In the event the **Contractor** utilizes a self-insurance program to satisfy any of the requirements of this Article 22, the **Contractor** shall ensure that any such self-insurance program provides the **City** with all rights that would be provided by traditional insurance under this Article 22, including but not limited to the defense and indemnification obligations that insurers are required to undertake in liability policies.

22.9 Materiality/Non-Waiver: The **Contractor's** failure to secure policies in complete conformity with this Article 22, or to give an insurance company timely notice of any sort required in this **Contract** or to do anything else required by this Article 22 shall constitute a material breach of this **Contract**. Such breach shall not be waived or otherwise excused by any action or inaction by the **City** at any time.

22.10 Pursuant to General Municipal Law Section 108, this **Contract** shall be void and of no effect unless **Contractor** maintains Workers' Compensation Insurance for the term of this **Contract** to the extent required and in compliance with the New York State Workers' Compensation Law.

22.11 Other Remedies: Insurance coverage provided pursuant to this Article 22 or otherwise shall not relieve the **Contractor** of any liability under this **Contract**, nor shall it preclude the **City** from exercising any rights or taking such other actions available to it under any other provisions of this **Contract** or **Law**.

ARTICLE 23. MONEY RETAINED AGAINST CLAIMS

23.1 If any claim shall be made by any person or entity (including **Other Contractors** with the **City** on this **Project**) against the **City** or against the **Contractor** and the **City** for any of the following:

(a) An alleged loss, damage, injury, theft or vandalism of any of the kinds referred to in Articles 7 and 12, plus the reasonable costs of defending the **City**, which in the opinion of the **Comptroller** may not be paid by an insurance company (for any reason whatsoever); or

(b) An infringement of copyrights, patents or use of patented articles, tools, etc., as referred to in Article 57; or

(c) Damage claimed to have been caused directly or indirectly by the failure of the **Contractor** to perform the **Work** in strict accordance with this **Contract,**

the amount of such claim, or so much thereof as the **Comptroller** may deem necessary, may be withheld by the **Comptroller**, as security against such claim, from any money due hereunder. The **Comptroller**, in his/her discretion, may permit the **Contractor** to substitute other satisfactory security in lieu of the monies so withheld.

23.2 If an action on such claim is timely commenced and the liability of the **City**, or the **Contractor**, or both, shall have been established therein by a final judgment of a court of competent jurisdiction, or if such claim shall have been admitted by the **Contractor** to be valid, the **Comptroller** shall pay such judgment or admitted claim out of the monies retained by the **Comptroller** under the provisions of this Article 23, and return the balance, if any, without interest, to the **Contractor**.

ARTICLE 24. MAINTENANCE AND GUARANTY

24.1 The **Contractor** shall promptly repair, replace, restore or rebuild, as the **Commissioner** may determine, any finished **Work** in which defects of materials or workmanship may appear or to which damage may occur because of such defects, during the one (1) year period subsequent to the date of **Substantial Completion** (or use and occupancy in accordance with Article 16), except where other periods of maintenance and guaranty are provided for in Schedule A.

24.2 As security for the faithful performance of its obligations hereunder, the **Contractor**, upon filing its requisition for payment on **Substantial Completion**, shall deposit with the **Commissioner** a sum equal to one (1%) percent of the price (or the amount fixed in Schedule A of the General Conditions) in cash or certified check upon a state or national bank and trust company or a check of such bank and trust company signed by a duly authorized officer thereof and drawn to the order of the **Comptroller**, or obligations of the **City**, which the **Comptroller** may approve as of equal value with the sum so required.

24.3 In lieu of the above, the **Contractor** may make such security payment to the **City** by authorizing the **Commissioner** in writing to deduct the amount from the **Substantial Completion** payment which shall be deemed the deposit required above.

24.4 If the **Contractor** has faithfully performed all of its obligations hereunder the **Commissioner** shall so certify to the **Comptroller** within five (5) **Days** after the expiration of one (1) year from the date of **Substantial Completion** and acceptance of the **Work** or within thirty (30) **Days** after the expiration of the guarantee period fixed in the **Specifications**. The security payment shall be repaid to the **Contractor** without interest within thirty (30) **Days** after certification by the **Commissioner** to the **Comptroller** that the **Contractor** has faithfully performed all of its obligations hereunder.

24.5 Notice by the **Commissioner** to the **Contractor** to repair, replace, rebuild or restore such defective or damaged **Work** shall be timely, pursuant to this article, if given not later than ten (10) **Days** subsequent to the expiration of the one (1) year period or other periods provided for herein.

24.6 If the **Contractor** shall fail to repair, replace, rebuild or restore such defective or damaged **Work** promptly after receiving such notice, the **Commissioner** shall have the right to have the **Work** done by others in the same manner as provided for in the completion of a defaulted **Contract**, under Article 51.

24.7 If the security payment so deposited is insufficient to cover the cost of such **Work**, the **Contractor** shall be liable to pay such deficiency on demand by the **Commissioner**.

24.8 The **Engineer's** certificate setting forth the fair and reasonable cost of repairing, replacing, rebuilding or restoring any damaged or defective **Work** when performed by one other than the **Contractor**, shall be binding and conclusive upon the **Contractor** as to the amount thereof.

24.9 The **Contractor** shall obtain all manufacturers' warranties and guaranties of all equipment and materials required by this **Contract** in the name of the **City** and shall deliver same to the **Commissioner**. All of the **City's** rights and title and interest in and to said manufacturers' warranties and guaranties may be assigned by the **City** to any subsequent purchasers of such equipment and materials or lessees of the premises into which the equipment and materials have been installed.

CHAPTER VI: CHANGES, EXTRA WORK, AND DOCUMENTATION OF CLAIM

ARTICLE 25. CHANGES

25.1 Changes may be made to this **Contract** only as duly authorized in writing by the **Commissioner** in accordance with the **Law** and this **Contract**. All such changes, modifications, and amendments will become a part of the **Contract**. **Work** so ordered shall be performed by the **Contractor**.

25.2 **Contract** changes will be made only for **Work** necessary to complete the **Work** included in the original scope of the **Contract** and/or for non-material changes to the scope of the **Contract**. Changes are not permitted for any material alteration in the scope of **Work** in the **Contract**.

25.3 The **Contractor** shall be entitled to a price adjustment for **Extra Work** performed pursuant to a written change order. Adjustments to price shall be computed in one or more of the following ways:

25.3.1 By applicable unit prices specified in the **Contract**; and/or

25.3.2 By agreement of a fixed price; and/or

25.3.3 By time and material records; and/or

25.3.4 In any other manner approved by the **CCPO**.

25.4 All payments for change orders are subject to pre-audit by the **Engineering Audit Officer** and may be post-audited by the **Comptroller** and/or the **Agency**.

ARTICLE 26. METHODS OF PAYMENT FOR OVERRUNS AND EXTRA WORK

26.1 Overrun of Unit Price Item: An overrun is any quantity of a unit price item which the **Contractor** is directed to provide which is in excess of one hundred twenty-five (125%) percent of the estimated quantity for that item set forth in the bid schedule.

26.1.1For any unit price item, the **Contractor** will be paid at the unit price bid for any quantity up to one hundred twenty-five (125%) percent of the estimated quantity for that item set forth in the bid schedule. If during the progress of the **Work**, the actual quantity of any unit price item required to complete the **Work** approaches the estimated quantity for that item, and for any reason it appears that the actual quantity of any unit price item necessary to complete the **Work** will exceed the estimated quantity for that item by twenty-five (25%) percent, the **Contractor** shall immediately notify the **Engineer** of such anticipated overrun. The **Contractor** shall not be compensated for any quantity of a unit price item provided which is in excess of one hundred twenty-five (125%) percent of the estimated quantity for that item set forth in the bid schedule without written authorization from the **Engineer**.

26.1.2 If the actual quantity of any unit price item necessary to complete the **Work** will exceed one hundred twenty five (125%) percent of the estimated quantity for that item set forth in the bid schedule, the **City** reserves the right and the **Contractor** agrees to negotiate a new unit price for such item. In no event shall such negotiated new unit price exceed the unit bid price. If the **City** and **Contractor** cannot agree on a new unit price, then the **City** shall order the **Contractor** and the **Contractor** agrees to provide additional quantities of

the item on the basis of time and material records for the actual and reasonable cost as determined under Article 26.2, but in no event at a unit price exceeding the unit price bid.

26.2 **Extra Work:** For **Extra Work** where payment is by agreement on a fixed price in accordance with Article 25.3.2, the price to be paid for such **Extra Work** shall be based on the fair and reasonable estimated cost of the items set forth below. For **Extra Work** where payment is based on time and material records in accordance with Article 25.3.3, the price to be paid for such **Extra Work** shall be the actual and reasonable cost of the items set forth below, calculated in accordance with the formula specified therein, if any.

26.2.1 Necessary materials (including transportation to the **Site**); plus

26.2.2 Necessary direct labor, including payroll taxes (subject to statutory wage caps) and supplemental benefits; plus

26.2.3 Sales and personal property taxes, if any, required to be paid on materials not incorporated into such **Extra Work**; plus

26.2.4 Reasonable rental value of **Contractor**-owned (or **Subcontractor**-owned, as applicable), necessary plant and equipment other than **Small Tools**, plus fuel/energy costs. Except for fuel costs for pick-up trucks which shall be reimbursed based on a consumption of five (5) gallons per shift, fuel costs shall be reimbursed based on actual costs or, in the absence of auditable documentation, the following fuel consumption formula per operating hour: (.035) x (HP rating) x (Fuel cost/gallon). Reasonable rental value is defined as the lower of either seventy-five percent of the monthly prorated rental rates established in "The AED Green Book, Rental Rates and Specifications for Construction Equipment" published by Equipment Watch (the "Green Book"), or seventy-five percent of the monthly prorated rental rates established in the "Rental Rate Blue Book for Construction Equipment" published by Equipment Watch (the "Blue Book") (the applicable Blue Book rate being for rental only without the addition of any operational costs listed in the Blue Book). The reasonable rental value is deemed to be inclusive of all operating costs except for fuel/energy consumption and equipment operator's wages/costs. For multiple shift utilization, reimbursement shall be calculated as follows: first shift shall be seventy-five (75%) percent of such rental rates; second shift shall be sixty (60%) percent of the first shift rate; and third shift shall be forty (40%) percent of the first shift rate. Equipment on standby shall be reimbursed at one-third (1/3) the prorated monthly rental rate. **Contractor**-owned (or **Subcontractor**-owned, as applicable) equipment includes equipment from rental companies affiliated with or controlled by the **Contractor** (or **Subcontractor**, as applicable), as determined by the **Commissioner**. In establishing cost reimbursement for non-operating **Contractor**-owned (or **Subcontractor**-owned, as applicable) equipment (scaffolding, sheeting systems, road plates, etc.), the **City** may restrict reimbursement to a purchase-salvage/life cycle basis if less than the computed rental costs; plus

26.2.5 Necessary installation and dismantling of such plant and equipment, including transportation to and from the **Site**, if any, provided that, in the case of non-**Contractor**-owned (or non-**Subcontractor**-owned, as applicable) equipment rented from a third party, the cost of installation and dismantling are not allowable if such costs are included in the rental rate; plus

26.2.6 Necessary fees charged by governmental entities; plus

26.2.7 Necessary construction-related service fees charged by non-governmental entities, such as landfill tipping fees; plus

26.2.8 Reasonable rental costs of non-**Contractor**-owned (or non-**Subcontractor**-owned, as applicable) necessary plant and equipment other than **Small Tools**, plus fuel/energy costs. Except for fuel costs for pick-up trucks which shall be reimbursed based on a consumption of five (5) gallons per shift, fuel costs shall be reimbursed based on actual costs or, in the absence of auditable documentation, the following fuel consumption formula per hour of operation: (.035) x (HP rating) x (Fuel cost/gallon). In lieu of renting, the **City** reserves the right to direct the purchase of non-operating equipment (scaffolding, sheeting systems, road plates, etc.), with payment on a purchase-salvage/life cycle basis, if less than the projected rental costs; plus

26.2.9 Workers' Compensation Insurance, and any insurance coverage expressly required by the **City** for the performance of the **Extra Work** which is different than the types of insurance required by Article 22 and Schedule A of the General Conditions. The cost of Workers' Compensation Insurance is subject to applicable payroll limitation caps and shall be based upon the carrier's Manual Rate for such insurance derived from the applicable class Loss Cost ("LC") and carrier's Lost Cost Multiplier ("LCM") approved by the New York State Department of Financial Services, and with the exception of experience rating, rate modifiers as promulgated by the New York Compensation Insurance Rating Board ("NYCIRB"); plus

26.2.10 Additional costs incurred as a result of the **Extra Work** for performance and payment bonds; plus

26.2.11 Twelve percent (12%) percent of the total of items in Articles 26.2.1 through 26.2.5 as compensation for overhead, except that no percentage for overhead will be allowed on **Payroll Taxes** or on the premium portion of overtime pay or on sales and personal property taxes. Overhead shall include without limitation, all costs and expenses in connection with administration, management superintendence, small tools, and insurance required by Schedule A of the General Conditions other than Workers' Compensation Insurance; plus

26.2.12 Ten (10%) percent of the total of items in Articles 26.2.1 through 26.2.5, plus the items in Article 26.2.11, as compensation for profit, except that no percentage for profit will be allowed on **Payroll Taxes** or on the premium portion of overtime pay or on sales and personal property taxes; plus

26.2.13 Five (5%) percent of the total of items in Articles 26.2.6 through 26.2.10 as compensation for overhead and profit.

26.3 Where the **Extra Work** is performed in whole or in part by other than the **Contractor's** own forces pursuant to Article 26.2, the **Contractor** shall be paid, subject to pre-audit by the **Engineering Audit Officer**, the cost of such **Work** computed in accordance with Article 26.2 above, plus an additional allowance of five (5%) percent to cover the **Contractor's** overhead and profit.

26.4 Where a change is ordered, involving both **Extra Work** and omitted or reduced **Contract Work,** the **Contract** price shall be adjusted, subject to pre-audit by the **EAO**, in an amount based on the difference between the cost of such **Extra Work** and of the omitted or reduced **Work**.

26.5 Where the **Contractor** and the **Commissioner** can agree upon a fixed price for **Extra Work** in accordance with Article 25.3.2 or another method of payment for **Extra Work** in accordance with

Article 25.3.4, or for **Extra Work** ordered in connection with omitted **Work**, such method, subject to pre-audit by the **EAO**, may, at the option of the **Commissioner**, be substituted for the cost plus a percentage method provided in Article 26.2; provided, however, that if the **Extra Work** is performed by a **Subcontractor**, the **Contractor** shall not be entitled to receive more than an additional allowance of five (5%) percent for overhead and profit over the cost of such **Subcontractor's Work** as computed in accordance with Article 26.2.

ARTICLE 27. RESOLUTION OF DISPUTES

27.1 All disputes between the **City** and the **Contractor** of the kind delineated in this Article 27.1 that arise under, or by virtue of, this **Contract** shall be finally resolved in accordance with the provisions of this Article 27 and the **PPB** Rules. This procedure for resolving all disputes of the kind delineated herein shall be the exclusive means of resolving any such disputes.

27.1.1 This Article 27 shall not apply to disputes concerning matters dealt with in other sections of the **PPB** Rules, or to disputes involving patents, copyrights, trademarks, or trade secrets (as interpreted by the courts of New York State) relating to proprietary rights in computer software.

27.1.2 This Article 27 shall apply only to disputes about the scope of **Work** delineated by the **Contract**, the interpretation of **Contract** documents, the amount to be paid for **Extra Work** or disputed work performed in connection with the **Contract**, the conformity of the **Contractor's Work** to the **Contract**, and the acceptability and quality of the **Contractor's Work**; such disputes arise when the **Engineer**, **Resident Engineer**, **Engineering Audit Officer**, or other designee of the **Commissioner** makes a determination with which the **Contractor** disagrees.

27.2 All determinations required by this Article 27 shall be made in writing clearly stated, with a reasoned explanation for the determination based on the information and evidence presented to the party making the determination. Failure to make such determination within the time required by this Article 27 shall be deemed a non-determination without prejudice that will allow application to the next level.

27.3 During such time as any dispute is being presented, heard, and considered pursuant to this Article 27, the **Contract** terms shall remain in force and the **Contractor** shall continue to perform **Work** as directed by the **ACCO** or the **Engineer**. Failure of the **Contractor** to continue **Work** as directed shall constitute a waiver by the **Contractor** of its claim.

27.4 Presentation of Disputes to **Commissioner**.

Notice of Dispute and Agency Response. The **Contractor** shall present its dispute in writing ("Notice of Dispute") to the **Commissioner** within thirty (30) Days of receiving written notice of the determination or action that is the subject of the dispute. This notice requirement shall not be read to replace any other notice requirements contained in the **Contract**. The Notice of Dispute shall include all the facts, evidence, documents, or other basis upon which the **Contractor** relies in support of its position, as well as a detailed computation demonstrating how any amount of money claimed by the **Contractor** in the dispute was arrived at. Within thirty (30) Days after receipt of the detailed written submission comprising the complete Notice of Dispute, the **Engineer**, **Resident Engineer**, **Engineering Audit Officer**, or other designee of the **Commissioner** shall submit to the **Commissioner** all materials he or she deems pertinent to the dispute. Following initial submissions to the **Commissioner**, either party may demand of the other the production of any document or other material the demanding party believes may be relevant to the dispute. The requested party shall produce all relevant materials that are not otherwise

protected by a legal privilege recognized by the courts of New York State. Any question of relevancy shall be determined by the **Commissioner** whose decision shall be final. Willful failure of the **Contractor** to produce any requested material whose relevancy the **Contractor** has not disputed, or whose relevancy has been affirmatively determined, shall constitute a waiver by the **Contractor** of its claim.

27.4.1 **Commissioner** Inquiry. The **Commissioner** shall examine the material and may, in his or her discretion, convene an informal conference with the **Contractor**, the **ACCO**, and the **Engineer**, **Resident Engineer**, **Engineering Audit Officer**, or other designee of the **Commissioner** to resolve the issue by mutual consent prior to reaching a determination. The **Commissioner** may seek such technical or other expertise as he or she shall deem appropriate, including the use of neutral mediators, and require any such additional material from either or both parties as he or she deems fit. The **Commissioner's** ability to render, and the effect of, a decision hereunder shall not be impaired by any negotiations in connection with the dispute presented, whether or not the **Commissioner** participated therein. The **Commissioner** may or, at the request of any party to the dispute, shall compel the participation of any **Other Contractor** with a contract related to the **Work** of this **Contract**, and that **Contractor** shall be bound by the decision of the **Commissioner**. Any **Other Contractor** thus brought into the dispute resolution proceeding shall have the same rights and obligations under this Article 27 as the **Contractor** initiating the dispute.

27.4.2 **Commissioner** Determination. Within thirty (30) **Days** after the receipt of all materials and information, or such longer time as may be agreed to by the parties, the **Commissioner** shall make his or her determination and shall deliver or send a copy of such determination to the **Contractor**, the **ACCO**, and **Engineer**, **Resident Engineer**, **Engineering Audit Officer**, or other designee of the **Commissioner**, as applicable, together with a statement concerning how the decision may be appealed.

27.4.3 Finality of **Commissioner's** Decision. The **Commissioner's** decision shall be final and binding on all parties, unless presented to the Contract Dispute Resolution Board pursuant to this Article 27. The **City** may not take a petition to the Contract Dispute Resolution Board. However, should the **Contractor** take such a petition, the **City** may seek, and the Contract Dispute Resolution Board may render, a determination less favorable to the **Contractor** and more favorable to the **City** than the decision of the **Commissioner**.

27.5 Presentation of Dispute to the **Comptroller**. Before any dispute may be brought by the **Contractor** to the Contract Dispute Resolution Board, the **Contractor** must first present its claim to the **Comptroller** for his or her review, investigation, and possible adjustment.

27.5.1 Time, Form, and Content of Notice. Within thirty (30) **Days** of its receipt of a decision by the **Commissioner**, the **Contractor** shall submit to the **Comptroller** and to the **Commissioner** a Notice of Claim regarding its dispute with the **Agency**. The Notice of Claim shall consist of (i) a brief written statement of the substance of the dispute, the amount of money, if any, claimed and the reason(s) the **Contractor** contends the dispute was wrongly decided by the **Commissioner**; (ii) a copy of the written decision of the **Commissioner**; and (iii) a copy of all materials submitted by the **Contractor** to the **Agency**, including the Notice of Dispute. The **Contractor** may not present to the **Comptroller** any material not presented to the **Commissioner**, except at the request of the **Comptroller**.

27.5.2 Response. Within thirty (30) **Days** of receipt of the Notice of Claim, the **Agency** shall make available to the **Comptroller** a copy of all material submitted by the **Agency** to the **Commissioner** in connection with the dispute. The **Agency** may not present to the **Comptroller** any material not presented to the **Commissioner** except at the request of the **Comptroller**.

27.5.3 **Comptroller** Investigation. The **Comptroller** may investigate the claim in dispute and, in the course of such investigation, may exercise all powers provided in Sections 7-201 and 7-203 of the Administrative Code. In addition, the **Comptroller** may demand of either party, and such party shall provide, whatever additional material the **Comptroller** deems pertinent to the claim, including original business records of the **Contractor**. Willful failure of the **Contractor** to produce within fifteen (15) **Days** any material requested by the **Comptroller** shall constitute a waiver by the **Contractor** of its claim. The **Comptroller** may also schedule an informal conference to be attended by the **Contractor**, **Agency** representatives, and any other personnel desired by the **Comptroller**.

27.5.4 Opportunity of **Comptroller** to Compromise or Adjust Claim. The **Comptroller** shall have forty-five (45) **Days** from his or her receipt of all materials referred to in Article 27.5.3 to investigate the disputed claim. The period for investigation and compromise may be further extended by agreement between the **Contractor** and the **Comptroller**, to a maximum of ninety (90) **Days** from the **Comptroller's** receipt of all materials. The **Contractor** may not present its petition to the Contract Dispute Resolution Board until the period for investigation and compromise delineated in this Article 27.5.4 has expired. In compromising or adjusting any claim hereunder, the **Comptroller** may not revise or disregard the terms of the **Contract** between the parties.

27.6 Contract Dispute Resolution Board. There shall be a Contract Dispute Resolution Board composed of:

27.6.1 The chief administrative law judge of the Office of Administrative Trials and Hearings (OATH) or his/her designated OATH administrative law judge, who shall act as chairperson, and may adopt operational procedures and issue such orders consistent with this Article 27 as may be necessary in the execution of the Contract Dispute Resolution Board's functions, including, but not limited to, granting extensions of time to present or respond to submissions;

27.6.2 The **CCPO** or his/her designee; any designee shall have the requisite background to consider and resolve the merits of the dispute and shall not have participated personally and substantially in the particular matter that is the subject of the dispute or report to anyone who so participated; and

27.6.3 A person with appropriate expertise who is not an employee of the **City**. This person shall be selected by the presiding administrative law judge from a prequalified panel of individuals, established and administered by OATH with appropriate background to act as decision-makers in a dispute. Such individual may not have a contract or dispute with the **City** or be an officer or employee of any company or organization that does, or regularly represents persons, companies, or organizations having disputes with the **City**.

27.7 Petition to the Contract Dispute Resolution Board. In the event the claim has not been settled or adjusted by the **Comptroller** within the period provided in this Article 27, the **Contractor**,

within thirty (30) **Days** thereafter, may petition the Contract Dispute Resolution Board to review the **Commissioner's** determination.

27.7.1 Form and Content of Petition by **Contractor**. The **Contractor** shall present its dispute to the Contract Dispute Resolution Board in the form of a petition, which shall include (i) a brief written statement of the substance of the dispute, the amount of money, if any, claimed, and the reason(s) the **Contractor** contends the dispute was wrongly decided by the **Commissioner**; (ii) a copy of the written Decision of the **Commissioner**, (iii) copies of all materials submitted by the **Contractor** to the Agency; (iv) a copy of the written decision of the **Comptroller**, if any, and (v) copies of all correspondence with, or written material submitted by the **Contractor**, to the **Comptroller**. The **Contractor** shall concurrently submit four (4) complete sets of the Petition: one set to the **City** Corporation Counsel (Attn: Commercial and Real Estate Litigation Division) and three (3) sets to the Contract Dispute Resolution Board at OATH's offices with proof of service on the **City** Corporation Counsel. In addition, the **Contractor** shall submit a copy of the written statement of the substance of the dispute, cited in (i) above, to both the **Commissioner** and the **Comptroller**.

27.7.2 **Agency** Response. Within thirty (30) **Days** of its receipt of the Petition by the **City** Corporation Counsel, the **Agency** shall respond to the brief written statement of the **Contractor** and make available to the Contract Dispute Resolution Board all material it submitted to the **Commissioner** and **Comptroller**. Three (3) complete copies of the **Agency** response shall be provided to the Contract Dispute Resolution Board and one to the **Contractor**. Extensions of time for submittal of the **Agency** response shall be given as necessary upon a showing of good cause or, upon consent of the parties, for an initial period of up to thirty (30) Days.

27.7.3 Further Proceedings. The Contract Dispute Resolution Board shall permit the **Contractor** to present its case by submission of memoranda, briefs, and oral argument. The Contract Dispute Resolution Board shall also permit the **Agency** to present its case in response to the **Contractor** by submission of memoranda, briefs, and oral argument. If requested by the **City** Corporation Counsel, the **Comptroller** shall provide reasonable assistance in the preparation of the **Agency's** case. Neither the **Contractor** nor the **Agency** may support its case with any documentation or other material that was not considered by the **Comptroller**, unless requested by the Contract Dispute Resolution Board. The Contract Dispute Resolution Board, in its discretion, may seek such technical or other expert advice as it shall deem appropriate and may seek, on its own or upon application of a party, any such additional material from any party as it deems fit. The Contract Dispute Resolution Board, in its discretion, may combine more than one dispute between the parties for concurrent resolution.

27.7.4 Contract Dispute Resolution Board Determination. Within forty-five (45) **Days** of the conclusion of all written submissions and oral arguments, the Contract Dispute Resolution Board shall render a written decision resolving the dispute. In an unusually complex case, the Contract Dispute Resolution Board may render its decision in a longer period, not to exceed ninety (90) **Days**, and shall so advise the parties at the commencement of this period. The Contract Dispute Resolution Board's decision must be consistent with the terms of the **Contract**. Decisions of the Contract Dispute Resolution Board shall only resolve matters before the Contract Dispute Resolution Board and shall not have precedential effect with respect to matters not before the Contract Dispute Resolution Board.

27.7.5 Notification of Contract Dispute Resolution Board Decision. The Contract Dispute Resolution Board shall send a copy of its decision to the **Contractor**, the **ACCO**, the Engineer, the **Comptroller**, the **City** Corporation Counsel, the CCPO, and the **PPB**. A decision in favor of the **Contractor** shall be subject to the prompt payment provisions of the **PPB** Rules. The Required Payment Date shall be thirty (30) Days after the date the parties are formally notified of the Contract Dispute Resolution Board's decision.

27.7.6 Finality of Contract Dispute Resolution Board Decision. The Contract Dispute Resolution Board's decision shall be final and binding on all parties. Any party may seek review of the Contract Dispute Resolution Board's decision solely in the form of a challenge, filed within four (4) months of the date of the Contract Dispute Resolution Board's decision, in a court of competent jurisdiction of the State of New York, County of New York pursuant to Article 78 of the Civil Practice Law and Rules. Such review by the court shall be limited to the question of whether or not the Contract Dispute Resolution Board's decision was made in violation of lawful procedure, was affected by an error of **Law**, or was arbitrary and capricious or an abuse of discretion. No evidence or information shall be introduced or relied upon in such proceeding that was not presented to the Contract Dispute Resolution Board in accordance with this Article 27.

27.8 Any termination, cancellation, or alleged breach of the **Contract** prior to or during the pendency of any proceedings pursuant to this Article 27 shall not affect or impair the ability of the **Commissioner** or Contract Dispute Resolution Board to make a binding and final decision pursuant to this Article 27.

ARTICLE 28. RECORD KEEPING FOR EXTRA OR DISPUTED WORK OR WORK ON A TIME & MATERIALS BASIS

28.1 While the **Contractor** or any of its **Subcontractors** is performing **Work** on a time and material basis or **Extra Work** on a time and material basis ordered by the **Commissioner** under Article 25, or where the **Contractor** believes that it or any of its **Subcontractors** is performing **Extra Work** but a final determination by **Agency** has not been made, or the **Contractor** or any of its **Subcontractors** is performing disputed **Work** (whether on or off the **Site**), or complying with a determination or order under protest in accordance with Articles 11, 27, and 30, in each such case the **Contractor** shall furnish the **Resident Engineer** daily with three (3) copies of written statements signed by the **Contractor's** representative at the **Site** showing:

28.1.1 The name, trade, and number of each worker employed on such **Work** or engaged in complying with such determination or order, the number of hours employed, and the character of the **Work** each is doing; and

28.1.2 The nature and quantity of any materials, plant and equipment furnished or used in connection with the performance of such **Work** or compliance with such determination or order, and from whom purchased or rented.

28.2 A copy of such statement will be countersigned by the **Resident Engineer**, noting thereon any items not agreed to or questioned, and will be returned to the **Contractor** within two (2) **Days** after submission.

28.3 The **Contractor** and its **Subcontractors**, when required by the **Commissioner**, or the **Comptroller**, shall also produce for inspection, at the office of the **Contractor** or **Subcontractor**, any and all of its books, bid documents, financial statements, vouchers, records, daily job diaries and reports,

and cancelled checks, and any other documents relating to showing the nature and quantity of the labor, materials, plant and equipment actually used in the performance of such **Work**, or in complying with such determination or order, and the amounts expended therefor, and shall permit the **Commissioner** and the **Comptroller** to make such extracts therefrom, or copies thereof, as they or either of them may desire.

28.4 In connection with the examination provided for herein, the **Commissioner**, upon demand therefor, will produce for inspection by the **Contractor** such records as the **Agency** may have with respect to such **Extra Work** or disputed **Work** performed under protest pursuant to order of the **Commissioner**, except those records and reports which may have been prepared for the purpose of determining the accuracy and validity of the **Contractor's** claim.

28.5 Failure to comply strictly with these requirements shall constitute a waiver of any claim for extra compensation or damages on account of the performance of such **Work** or compliance with such determination or order.

ARTICLE 29. OMITTED WORK

29.1 If any **Contract Work** in a lump sum **Contract**, or if any part of a lump sum item in a unit price, lump sum, or percentage-bid **Contract** is omitted by the **Commissioner** pursuant to Article 33, the **Contract** price, subject to audit by the EAO, shall be reduced by a pro rata portion of the lump sum bid amount based upon the percent of **Work** omitted subject to Article 29.4. For the purpose of determining the pro rata portion of the lump sum bid amount, the bid breakdown submitted in accordance with Article 41 shall be considered, but shall not be the determining factor.

29.2 If the whole of a lump sum item or units of any other item is so omitted by the **Commissioner** in a unit price, lump sum, or percentage-bid **Contract**, then no payment will be made therefor except as provided in Article 29.4.

29.3 For units that have been ordered but are only partially completed, the unit price shall be reduced by a pro rata portion of the unit price bid based upon the percentage of **Work** omitted subject to Article 29.4.

29.4 In the event the **Contractor**, with respect to any omitted **Work**, has purchased any non-cancelable material and/or equipment that is not capable of use except in the performance of this **Contract** and has been specifically fabricated for the sole purpose of this **Contract**, but not yet incorporated into the **Work**, the **Contractor** shall be paid for such material and/or equipment in accordance with Article 64.2.1(b); provided, however, such payment is contingent upon the **Contractor's** delivery of such material and/or equipment in acceptable condition to a location designated by the **City**.

29.5 The **Contractor** agrees to make no claim for damages or for loss of overhead and profit with regard to any omitted **Work**.

ARTICLE 30. NOTICE AND DOCUMENTATION OF COSTS AND DAMAGES; PRODUCTION OF FINANCIAL RECORDS

30.1 If the **Contractor** shall claim to be sustaining damages by reason of any act or omission of the **City** or its agents, it shall submit to the **Commissioner** within forty-five (45) **Days** from the time such damages are first incurred, and every thirty (30) **Days** thereafter to the extent additional damages are being incurred for the same condition, verified statements of the details and the amounts of such

damages, together with documentary evidence of such damages. The **Contractor** may submit any of the above statements within such additional time as may be granted by the **Commissioner** in writing upon written request therefor. Failure of the **Commissioner** to respond in writing to a written request for additional time within thirty (30) **Days** shall be deemed a denial of the request. On failure of the **Contractor** to strictly comply with the foregoing provisions, such claims shall be deemed waived and no right to recover on such claims shall exist. Damages that the **Contractor** may claim in any action or dispute resolution procedure arising under or by reason of this **Contract** shall not be different from or in excess of the statements and documentation made pursuant to this Article 30. This Article 30.1 does not apply to claims submitted to the **Commissioner** pursuant to Article 11 or to claims disputing a determination under Article 27.

30.2 In addition to the foregoing statements, the **Contractor** shall, upon notice from the **Commissioner**, produce for examination at the **Contractor's** office, by the **Engineer**, **Architect** or **Project Manager**, all of its books of account, bills, invoices, payrolls, subcontracts, time books, daily reports, bank deposit books, bank statements, check books, and cancelled checks, showing all of its acts and transactions in connection with or relating to or arising by reason of this **Contract**, and submit itself and persons in its employment, for examination under oath by any person designated by the **Commissioner** or **Comptroller** to investigate claims made or disputes against the **City** under this **Contract**. At such examination, a duly authorized representative of the **Contractor** may be present.

30.3 In addition to the statements required under Article 28 and this Article 30, the **Contractor** and/or its **Subcontractor** shall, within thirty (30) **Days** upon notice from the **Commissioner** or **Comptroller**, produce for examination at the **Contractor's** and/or **Subcontractor's** office, by a representative of either the **Commissioner** or **Comptroller**, all of its books of account, bid documents, financial statements, accountant workpapers, bills, invoices, payrolls, subcontracts, time books, daily reports, bank deposit books, bank statements, check books, and cancelled checks, showing all of its acts and transactions in connection with or relating to or arising by reason of this **Contract**. Further, the **Contractor** and/or its **Subcontractor** shall submit any person in its employment, for examination under oath by any person designated by the **Commissioner** or **Comptroller** to investigate claims made or disputes against the **City** under this **Contract**. At such examination, a duly authorized representative of the **Contractor** may be present.

30.4 Unless the information and examination required under Article 30.3 is provided by the **Contractor** and/or its **Subcontractor** upon thirty (30) **Days'** notice from the **Commissioner** or **Comptroller**, or upon the **Commissioner's** or **Comptroller's** written authorization to extend the time to comply, the **City** shall be released from all claims arising under, relating to or by reason of this **Contract**, except for sums certified by the **Commissioner** to be due under the provisions of this **Contract**. It is further stipulated and agreed that no person has the power to waive any of the foregoing provisions and that in any action or dispute resolution procedure against the **City** to recover any sum in excess of the sums certified by the **Commissioner** to be due under or by reason of this **Contract**, the **Contractor** must allege in its complaint and prove, at trial or during such dispute resolution procedure, compliance with the provisions of this Article 30.

30.5 In addition, after the commencement of any action or dispute resolution procedure by the **Contractor** arising under or by reason of this **Contract**, the **City** shall have the right to require the **Contractor** to produce for examination under oath, up until the trial of the action or hearing before the Contract Dispute Resolution Board, the books and documents described in Article 30.3 and submit itself and all persons in its employ for examination under oath. If this Article 30 is not complied with as required, then the **Contractor** hereby consents to the dismissal of the action or dispute resolution procedure.

CHAPTER VII: POWERS OF THE RESIDENT ENGINEER,THE ENGINEER OR ARCHITECT AND THE COMMISSIONER

ARTICLE 31. THE RESIDENT ENGINEER

31.1 The **Resident Engineer** shall have the power to inspect, supervise, and control the performance of the **Work**, subject to review by the **Commissioner**. The **Resident Engineer** shall not, however, have the power to issue an **Extra Work** order, except as specifically designated in writing by the **Commissioner**.

ARTICLE 32. THE ENGINEER OR ARCHITECT OR PROJECT MANAGER

32.1 The **Engineer** or **Architect** or **Project Manager**, in addition to those matters elsewhere herein delegated to the **Engineer** and expressly made subject to his/her determination, direction or approval, shall have the power, subject to review by the **Commissioner**:

32.1.1 To determine the amount, quality, and location of the **Work** to be paid for hereunder; and

32.1.2 To determine all questions in relation to the **Work**, to interpret the **Contract Drawings**, **Specifications**, and **Addenda**, and to resolve all patent inconsistencies or ambiguities therein; and

32.1.3 To determine how the **Work** of this **Contract** shall be coordinated with **Work** of **Other Contractors** engaged simultaneously on this **Project**, including the power to suspend any part of the **Work**, but not the whole thereof; and

32.1.4 To make minor changes in the **Work** as he/she deems necessary, provided such changes do not result in a net change in the cost to the **City** or to the **Contractor** of the **Work** to be done under the **Contract**; and

32.1.5 To amplify the **Contract Drawings**, add explanatory information and furnish additional **Specifications** and drawings, consistent with this **Contract**.

32.2 The foregoing enumeration shall not imply any limitation upon the power of the **Engineer** or **Architect** or **Project Manager**, for it is the intent of this **Contract** that all of the **Work** shall generally be subject to his/her determination, direction, and approval, except where the determination, direction or approval of someone other than the **Engineer** or **Architect** or **Project Manager** is expressly called for herein.

32.3 The **Engineer** or **Architect** or **Project Manager** shall not, however, have the power to issue an **Extra Work** order, except as specifically designated in writing by the **Commissioner**.

ARTICLE 33. THE COMMISSIONER

33.1 The **Commissioner**, in addition to those matters elsewhere herein expressly made subject to his/her determination, direction or approval, shall have the power:

33.1.1 To review and make determinations on any and all questions in relation to this **Contract** and its performance; and

33.1.2 To modify or change this **Contract** so as to require the performance of **Extra Work** (subject, however, to the limitations specified in Article 25) or the omission of **Contract Work**; and

33.1.3 To suspend the whole or any part of the **Work** whenever in his/her judgment such suspension is required:

33.1.3(a) In the interest of the **City** generally; or

33.1.3(b) To coordinate the **Work** of the various contractors engaged on this **Project** pursuant to the provisions of Article 12; or

33.1.3(c) To expedite the completion of the entire **Project** even though the completion of this particular **Contract** may thereby be delayed.

ARTICLE 34. NO ESTOPPEL

34.1 Neither the **City** nor any **Agency**, official, agent or employee thereof, shall be bound, precluded or estopped by any determination, decision, approval, order, letter, payment or certificate made or given under or in connection with this **Contract** by the **City**, the **Commissioner**, the **Engineer**, the **Resident Engineer**, or any other official, agent or employee of the **City**, either before or after the final completion and acceptance of the **Work** and payment therefor:

34.1.1 From showing the true and correct classification, amount, quality or character of the **Work** actually done; or that any such determination, decision, order, letter, payment or certificate was untrue, incorrect or improperly made in any particular, or that the **Work**, or any part thereof, does not in fact conform to the requirements of this **Contract**; and

34.1.2 From demanding and recovering from the **Contractor** any overpayment made to it, or such damages as the **City** may sustain by reason of the **Contractor's** failure to perform each and every part of its **Contract**.

CHAPTER VIII: LABOR PROVISIONS

ARTICLE 35. EMPLOYEES

35.1 The **Contractor** and its **Subcontractors** shall not employ on the **Work**:

35.1.1 Anyone who is not competent, faithful and skilled in the **Work** for which he/she shall be employed; and whenever the **Commissioner** shall inform the **Contractor**, in writing, that any employee is, in his/her opinion, incompetent, unfaithful or disobedient, that employee shall be discharged from the **Work** forthwith, and shall not again be employed upon it; or

35.1.2 Any labor, materials or means whose employment, or utilization during the course of this **Contract**, may tend to or in any way cause or result in strikes, work stoppages, delays, suspension of **Work** or similar troubles by workers employed by the **Contractor** or its **Subcontractors**, or by any of the trades working in or about the buildings and premises where **Work** is being performed under this **Contract**, or by **Other Contractors** or their **Subcontractors** pursuant to other contracts, or on any other building or premises owned or operated by the **City**, its **Agencies**, departments, boards or authorities. Any violation by the **Contractor** of this requirement may, upon certification of the **Commissioner**, be considered as proper and sufficient cause for declaring the **Contractor** to be in default, and for the **City** to take action against it as set forth in Chapter X of this **Contract**, or such other article of this **Contract** as the Commissioner may deem proper; or

35.1.3 In accordance with Section 220.3-e of the Labor Law of the State of New York (hereinafter "Labor Law"), the **Contractor** and its **Subcontractors** shall not employ on the **Work** any apprentice, unless he/she is a registered individual, under a bona fide program registered with the New York State Department of Labor. The allowable ratio of apprentices to journey-level workers in any craft classification shall not be greater than the ratio permitted to the **Contractor** as to its work force on any job under the registered program. Any employee listed on a payroll at an apprentice wage rate, who is not registered as above, shall be paid the wage rate determined by the **Comptroller** of the **City** for the classification of **Work** actually performed. The **Contractor** or **Subcontractor** will be required to furnish written evidence of the registration of its program and apprentices as well as all the appropriate ratios and wage rates, for the area of the construction prior to using any apprentices on the **Contract Work.**

35.2 If the total cost of the **Work** under this **Contract** is at least two hundred fifty thousand ($250,000) dollars, all laborers, workers, and mechanics employed in the performance of the **Contract** on the public work site, either by the **Contractor**, **Subcontractor** or other person doing or contracting to do the whole or a part of the **Work** contemplated by the **Contract**, shall be certified prior to performing any **Work** as having successfully completed a course in construction safety and health approved by the United States Department of Labor's Occupational Safety and Health Administration that is at least ten (10) hours in duration.

35.3 In accordance with Local Law Nos. 30-2012 and 33-2012, codified at sections 6-132 and 12-113 of the Administrative Code, respectively,

35.3.1 The **Contractor** shall not take an adverse personnel action with respect to an officer or employee in retaliation for such officer or employee making a report of information concerning conduct which such officer or employee knows or reasonably believes to involve corruption, criminal activity, conflict of interest, gross mismanagement or abuse of authority by any officer or employee relating to this **Contract** to (a) the Commissioner of the Department of Investigation, (b) a member of the New York City Council, the Public Advocate, or the **Comptroller**, or (c) the **CCPO**, **ACCO**, **Agency** head, or **Commissioner**.

35.3.2 If any of the **Contractor**'s officers or employees believes that he or she has been the subject of an adverse personnel action in violation of Article 35.3.1, he or she shall be entitled to bring a cause of action against the **Contractor** to recover all relief necessary to make him or her whole. Such relief may include but is not limited to: (a) an injunction to restrain continued retaliation, (b) reinstatement to the position such employee would have had but for the retaliation or to an equivalent position, (c) reinstatement of full fringe benefits and seniority rights, (d) payment of two times back

pay, plus interest, and (e) compensation for any special damages sustained as a result of the retaliation, including litigation costs and reasonable attorney's fees.

35.3.3 The **Contractor** shall post a notice provided by the **City** in a prominent and accessible place on any site where work pursuant to the **Contract** is performed that contains information about:

35.3.3(a) how its employees can report to the New York City Department of Investigation allegations of fraud, false claims, criminality or corruption arising out of or in connection with the **Contract**; and

35.3.3(b) the rights and remedies afforded to its employees under Administrative Code sections 7-805 (the New York City False Claims Act) and 12-113 (the Whistleblower Protection Expansion Act) for lawful acts taken in connection with the reporting of allegations of fraud, false claims, criminality or corruption in connection with the **Contract**.

35.3.4 For the purposes of this Article 35.3, "adverse personnel action" includes dismissal, demotion, suspension, disciplinary action, negative performance evaluation, any action resulting in loss of staff, office space, equipment or other benefit, failure to appoint, failure to promote, or any transfer or assignment or failure to transfer or assign against the wishes of the affected officer or employee.

35.3.5 This Article 35.3 is applicable to all of the **Contractor**'s **Subcontractors** having subcontracts with a value in excess of $100,000; accordingly, the **Contractor** shall include this rider in all subcontracts with a value a value in excess of $100,000.

35.4 Article 35.3 is not applicable to this **Contract** if it is valued at $100,000 or less. Articles 35.3.1, 35.3.2, 35.3.4, and 35.3.5 are not applicable to this **Contract** if it was solicited pursuant to a finding of an emergency.

35.5 Paid Sick Leave Law.

35.5.1 Introduction and General Provisions.

35.5.1(a) The Earned Sick Time Act, also known as the Paid Sick Leave Law ("PSLL"), requires covered employees who annually perform more than 80 hours of work in New York City to be provided with paid sick time.[2] Contractors of the **City** or of other governmental entities may be required to provide sick time pursuant to the PSLL.

35.5.1(b) The PSLL became effective on April 1, 2014, and is codified at Title 20, Chapter 8, of the New York City Administrative Code. It is administered by the City's Department of Consumer Affairs ("DCA"); DCA's rules promulgated under the PSLL are codified at Chapter 7 of Title 6 of the Rules of the City of New York ("Rules").

[2] Pursuant to the PSLL, if fewer than five employees work for the same employer, as determined pursuant to New York City Administrative Code § 20-912(g), such employer has the option of providing such employees uncompensated sick time.

35.5.1(c) The **Contractor** agrees to comply in all respects with the PSLL and the Rules, and as amended, if applicable, in the performance of this **Contract**. The **Contractor** further acknowledges that such compliance is a material term of this **Contract** and that failure to comply with the PSLL in performance of this **Contract** may result in its termination.

35.5.1(d) The **Contractor** must notify the **Agency Chief Contracting Officer** of the **Agency** with whom it is contracting in writing within ten (10) days of receipt of a complaint (whether oral or written) regarding the PSLL involving the performance of this **Contract**. Additionally, the **Contractor** must cooperate with DCA's education efforts and must comply with DCA's subpoenas and other document demands as set forth in the PSLL and Rules.

35.5.1(e) The PSLL is summarized below for the convenience of the **Contractor**. The **Contractor** is advised to review the PSLL and Rules in their entirety. On the website www.nyc.gov/PaidSickLeave there are links to the PSLL and the associated Rules as well as additional resources for employers, such as Frequently Asked Questions, timekeeping tools and model forms, and an event calendar of upcoming presentations and webinars at which the **Contractor** can get more information about how to comply with the PSLL. The **Contractor** acknowledges that it is responsible for compliance with the PSLL notwithstanding any inconsistent language contained herein.

35.5.2 Pursuant to the PSLL and the Rules: Applicability, Accrual, and Use.

35.5.2(a) An employee who works within the City of New York for more than eighty hours in any consecutive 12-month period designated by the employer as its "calendar year" pursuant to the PSLL ("Year") must be provided sick time. Employers must provide a minimum of one hour of sick time for every 30 hours worked by an employee and compensation for such sick time must be provided at the greater of the employee's regular hourly rate or the minimum wage. Employers are not required to provide more than 40 hours of sick time to an employee in any Year.

35.5.2(b) An employee has the right to determine how much sick time he or she will use, provided that employers may set a reasonable minimum increment for the use of sick time not to exceed four hours per **Day**. In addition, an employee may carry over up to 40 hours of unused sick time to the following Year, provided that no employer is required to allow the use of more than forty hours of sick time in a Year or carry over unused paid sick time if the employee is paid for such unused sick time and the employer provides the employee with at least the legally required amount of paid sick time for such employee for the immediately subsequent Year on the first **Day** of such Year.

35.5.2(c) An employee entitled to sick time pursuant to the PSLL may use sick time for any of the following:

i. such employee's mental illness, physical illness, injury, or health condition or the care of such illness, injury, or condition or such employee's need for medical diagnosis or preventive medical care;
ii. such employee's care of a family member (an employee's child, spouse, domestic partner, parent, sibling, grandchild or grandparent, or the child or parent of an employee's spouse or domestic partner) who has a mental

illness, physical illness, injury or health condition or who has a need for medical diagnosis or preventive medical care;

iii. closure of such employee's place of business by order of a public official due to a public health emergency; or

iv. such employee's need to care for a child whose school or childcare provider has been closed due to a public health emergency.

35.5.2(d) An employer must not require an employee, as a condition of taking sick time, to search for a replacement. However, an employer may require an employee to provide: reasonable notice of the need to use sick time; reasonable documentation that the use of sick time was needed for a reason above if for an absence of more than three consecutive work days; and/or written confirmation that an employee used sick time pursuant to the PSLL. However, an employer may not require documentation specifying the nature of a medical condition or otherwise require disclosure of the details of a medical condition as a condition of providing sick time and health information obtained solely due to an employee's use of sick time pursuant to the PSLL must be treated by the employer as confidential.

35.5.2(e) If an employer chooses to impose any permissible discretionary requirement as a condition of using sick time, it must provide to all employees a written policy containing those requirements, using a delivery method that reasonably ensures that employees receive the policy. If such employer has not provided its written policy, it may not deny sick time to an employee because of non-compliance with such a policy.

35.5.2(f) Sick time to which an employee is entitled must be paid no later than the payday for the next regular payroll period beginning after the sick time was used.

35.5.3 Exemptions and Exceptions. Notwithstanding the above, the PSLL does not apply to any of the following:

35.5.3(a) an independent contractor who does not meet the definition of employee under section 190(2) of the New York State Labor Law;

35.5.3(b) an employee covered by a valid collective bargaining agreement in effect on April 1, 2014, until the termination of such agreement;

35.5.3(c) an employee in the construction or grocery industry covered by a valid collective bargaining agreement if the provisions of the PSLL are expressly waived in such collective bargaining agreement;

35.5.3(d) an employee covered by another valid collective bargaining agreement if such provisions are expressly waived in such agreement and such agreement provides a benefit comparable to that provided by the PSLL for such employee;

35.5.3(e) an audiologist, occupational therapist, physical therapist, or speech language pathologist who is licensed by the New York State Department of Education and who calls in for work assignments at will, determines his or her own schedule, has the ability to reject or accept any assignment referred to him or her, and is paid an average hourly wage that is at least four times the federal minimum wage;

35.5.3(f) an employee in a work study program under Section 2753 of Chapter 42 of the United States Code;

35.5.3(g) an employee whose work is compensated by a qualified scholarship program as that term is defined in the Internal Revenue Code, Section 117 of Chapter 20 of the United States Code; or

35.5.3(h) a participant in a Work Experience Program (WEP) under section 336-c of the New York State Social Services Law.

35.5.4 Retaliation Prohibited. An employer may not threaten or engage in retaliation against an employee for exercising or attempting in good faith to exercise any right provided by the PSLL. In addition, an employer may not interfere with any investigation, proceeding, or hearing pursuant to the PSLL.

35.5.5 Notice of Rights.

35.5.5(a) An employer must provide its employees with written notice of their rights pursuant to the PSLL. Such notice must be in English and the primary language spoken by an employee, provided that DCA has made available a translation into such language. Downloadable notices are available on DCA's website at http://www.nyc.gov/html/dca/html/law/PaidSickLeave.shtml.

35.5.5(b) Any person or entity that willfully violates these notice requirements is subject to a civil penalty in an amount not to exceed fifty dollars for each employee who was not given appropriate notice.

35.5.6 Records. An employer must retain records documenting its compliance with the PSLL for a period of at least three years, and must allow DCA to access such records in furtherance of an investigation related to an alleged violation of the PSLL.

35.5.7 Enforcement and Penalties.

35.5.7(a) Upon receiving a complaint alleging a violation of the PSLL, DCA has the right to investigate such complaint and attempt to resolve it through mediation. Within 30 **Days** of written notification of a complaint by DCA, or sooner in certain circumstances, the employer must provide DCA with a written response and such other information as DCA may request. If DCA believes that a violation of the PSLL has occurred, it has the right to issue a notice of violation to the employer.

35.5.7(b) DCA has the power to grant an employee or former employee all appropriate relief as set forth in New York City Administrative Code § 20-924(d). Such relief may include, among other remedies, treble damages for the wages that should have been paid, damages for unlawful retaliation, and damages and reinstatement for unlawful discharge. In addition, DCA may impose on an employer found to have violated the PSLL civil penalties not to exceed $500 for a first violation, $750 for a second violation within two years of the first violation, and $1,000 for each succeeding violation within two years of the previous violation.

35.5.8 More Generous Polices and Other Legal Requirements. Nothing in the PSLL is intended to discourage, prohibit, diminish, or impair the adoption or retention of a more generous sick time policy, or the obligation of an employer to comply with any contract,

collective bargaining agreement, employment benefit plan or other agreement providing more generous sick time. The PSLL provides minimum requirements pertaining to sick time and does not preempt, limit or otherwise affect the applicability of any other law, regulation, rule, requirement, policy or standard that provides for greater accrual or use by employees of sick leave or time, whether paid or unpaid, or that extends other protections to employees. The PSLL may not be construed as creating or imposing any requirement in conflict with any federal or state law, rule or regulation.

35.6 HireNYC: Hiring and Reporting Requirements. This Article 35.6 applies to construction contracts of $1,000,000 or more. The **Contractor** shall comply with the requirements of Articles 35.6.1-35.6.5 for all non-trades jobs (e.g., for an administrative position arising out of **Work** ant located in New York City). The **Contractor** shall reasonably cooperate with SBS and the **City** on specific outreach events, including "Hire-on-the-Spot" events, for the hiring of trades workers in connection with the **Work**. If provided elsewhere in this **Contract**, this **Contract** is subject to a project labor agreement.

35.6.1 Enrollment. The **Contractor** shall enroll with the HireNYC system, found at www.nyc.gov/sbs, within thirty (30) days after the registration of this **Contract** pursuant to Section 328 of the New York City Charter. The **Contractor** shall provide information about the business, designate a primary contact and say whether it intends to hire for any entry to mid-level job opportunities arising from this **Contract** and located in New York City, and, if so, the approximate start date of the first hire.

35.6.2 Job Posting Requirements.

35.6.2(a) Once enrolled in HireNYC, the **Contractor** agrees to update the HireNYC portal with all entry to mid-level job opportunities arising from this **Contract** and located in New York City, if any, which shall be defined as jobs requiring no more than an associate degree, as provided by the New York State Department of Labor (see Column F of https://labor.ny.gov/stats/2012-2022- NYS-Employment-Prospects.xls). The information to be updated includes the types of entry and mid-level positions made available from the work arising from the **Contract** and located in New York City, the number of positions, the anticipated schedule of initiating the hiring process for these positions, and the contact information for the **Contractor's** representative charged with overseeing hiring. The **Contractor** must update the HireNYC portal with any hiring needs arising from the contract and located in New York City, and the requirements of the jobs to be filled, no less than three weeks prior to the intended first day of employment for each new position, except with the permission of SBS, not to be unreasonably withheld, and must also update the HireNYC portal as set forth below.

35.6.2(b) After enrollment through HireNYC and submission of relevant information, SBS will work with the **Contractor** to develop a recruitment plan which will outline the candidate screening process, and will provide clear instructions as to when, where, and how interviews will take place. HireNYC will screen applicants based on employer requirements and refer applicants whom it believes are qualified to the **Contractor** for interviews. The **Contractor** must interview referred applicants whom it believes are qualified.

35.6.2(c) After completing an interview of a candidate referred by HireNYC, the **Contractor** must provide feedback via the portal within twenty (20) business days to indicate which candidates were interviewed and hired, if any. In addition, the **Contractor** shall provide the start date of new hires, and additional information

reasonably related to such hires, within twenty (20) business days after the start date. In the event the **Contractor** does not have any job openings covered by this Rider in any given year, the **Contractor** shall be required to provide an annual update to HireNYC to that effect. For this purpose, the reporting year shall run from the date of the registration of the **Contract** pursuant to Charter section 328 and each anniversary date.

35.6.2(d) These requirements do not limit the **Contractor's** ability to assess the qualifications of prospective workers, and to make final hiring and retention decisions. No provision of this Article 35.6 shall be interpreted so as to require the **Contractor** to employ any particular worker.

35.6.2(e) In addition, the provisions of this Article 35.6 shall not apply to positions that the **Contractor** intends to fill with employees employed pursuant to the job retention provision of Section 22-505 of the Administrative Code of the City of New York. The **Contractor** shall not be required to report such openings with HireNYC. However, the **Contractor** shall enroll with the HireNYC system pursuant to Article 35.6.1, above, and, if such positions subsequently become open, then the remaining provisions of this Article 35.6 will apply.

35.6.3 Breach and Liquidated Damages. If the **Contractor** fails to comply with the terms of the **ContrSact** and this Article 35.6 (l) by not enrolling its business with HireNYC; (2) by not informing HireNYC, as required, of open positions; or (3) by failing to interview a qualified candidate, the **Agency** may assess liquidated damages in the amount of two-thousand five hundred dollars ($2,500) per breach. For all other events of noncompliance with the terms of this Article 35.6, the **Agency** may assess liquidated damages in the amount of five hundred dollars ($500) per breach. Furthermore, in the event the **Contractor** breaches the requirements of this Article 35.6 during the term of the **Contract**, the **City** may hold the **Contractor** in default of this **Contract**.

35.6.4 Audit Compliance. In addition to the auditing requirements set forth in other parts of the **Contract**, the **Contractor** shall permit SBS and the **City** to inspect any and all records concerning or relating to job openings or the hiring of individuals for work arising from the **Contract** and located in New York City. The **Contractor** shall permit an inspection within seven (7) business days of the request.

35.6.5 Other Reporting Requirements. The **Contractor** shall report to the **City**, on a monthly basis, all information reasonably requested by the **City** that is necessary for the **City** to comply with any reporting requirements imposed by **Law**, including any requirement that the **City** maintain a publicly accessible database. In addition, the **Contractor** agrees to comply with all reporting requirements imposed by **Law**, or as otherwise requested by the **City**.

35.6.6 Federal Hiring Requirements. If this **Contract** is federally funded (as indicated elsewhere in this Contract), the **Contractor** shall comply with all federal hiring requirements as may be set forth in this **Contract**, including, as applicable: (a) Section 3 of the HUD Act of 1968, which requires, to the greatest extent feasible, economic opportunities for 30 percent of new hires be given to low- and very low-income persons, particularly persons who are recipients of HUD assistance for housing and Executive Order 11246, which prohibits discrimination in employment due to race, color, religion, sex or national origin, and requires the implementation of goals for minority and female participation for work involving any construction trade.

ARTICLE 36. NO DISCRIMINATION

36.1 The **Contractor** specifically agrees, as required by Labor Law Section 220-e, as amended, that:

36.1.1 In the hiring of employees for the performance of **Work** under this **Contract** or any subcontract hereunder, neither the **Contractor**, **Subcontractor**, nor any person acting on behalf of such **Contractor** or **Subcontractor**, shall by reason of race, creed, color or national origin discriminate against any citizen of the State of New York who is qualified and available to perform the **Work** to which the employment relates;

36.1.2 Neither the **Contractor**, **Subcontractor**, nor any person on its behalf shall, in any manner, discriminate against or intimidate any employee hired for the performance of **Work** under this **Contract** on account of race, creed, color or national origin;

36.1.3 There may be deducted from the amount payable to the **Contractor** by the **City** under this **Contract** a penalty of fifty ($50.00) dollars for each person for each **Day** during which such person was discriminated against or intimidated in violation of the provisions of this **Contract**; and

36.1.4 This **Contract** may be cancelled or terminated by the **City** and all moneys due or to become due hereunder may be forfeited, for a second or any subsequent violation of the terms or conditions of this Article 36.

36.1.5 This Article 36 covers all construction, alteration and repair of any public building or public work occurring in the State of New York and the manufacture, sale, and distribution of materials, equipment, and supplies to the extent that such operations are performed within the State of New York pursuant to this **Contract**.

36.2 The **Contractor** specifically agrees, as required by Section 6-108 of the Administrative Code, as amended, that:

36.2.1 It shall be unlawful for any person engaged in the construction, alteration or repair of buildings or engaged in the construction or repair of streets or highways pursuant to a **Contract** with the **City** or engaged in the manufacture, sale or distribution of materials, equipment or supplies pursuant to a **Contract** with the **City** to refuse to employ or to refuse to continue in any employment any person on account of the race, color or creed of such person.

36.2.2 It shall be unlawful for any person or any servant, agent or employee of any person, described in Article 36.1.2, to ask, indicate or transmit, orally or in writing, directly or indirectly, the race, color or creed or religious affiliation of any person employed or seeking employment from such person, firm or corporation.

36.2.3 Breach of the foregoing provisions shall be deemed a violation of a material provision of this **Contract**.

36.2.4 Any person, or the employee, manager or owner of or officer of such firm or corporation who shall violate any of the provisions of this Article 36.2 shall, upon

conviction thereof, be punished by a fine of not more than one hundred ($100.00) dollars or by imprisonment for not more than thirty (30) **Days**, or both.

36.3 This **Contract** is subject to the requirements of Executive Order No. 50 (1980) ("E.O. 50"), as revised, and the rules and regulations promulgated thereunder. No contract will be awarded unless and until these requirements have been complied with in their entirety. By signing this **Contract**, the **Contractor** agrees that it:

36.3.1 Will not engage in any unlawful discrimination against any employee or applicant for employment because of race, creed, color, national origin, sex, age, disability, marital status or sexual orientation with respect to all employment decisions including, but not limited to, recruitment, hiring, upgrading, demotion, downgrading, transfer, training, rates of pay or other forms of compensation, layoff, termination, and all other terms and conditions of employment; and

36.3.2 Will not engage in any unlawful discrimination in the selection of **Subcontractors** on the basis of the owner's race, color, creed, national origin, sex, age, disability, marital status or sexual orientation; and

36.3.3 Will state in all solicitations or advertisements for employees placed by or on behalf of the **Contractor** that all qualified applicants will receive consideration for employment without unlawful discrimination based on race, creed, color, national origin, sex, age, citizens status, disability, marital status, sexual orientation, or that it is an equal employment opportunity employer; and

36.3.4 Will send to each labor organization or representative of workers with which it has a collective bargaining agreement or other contract or memorandum of understanding, written notification of its equal employment opportunity commitments under E.O. 50 and the rules and regulations promulgated thereunder; and

36.3.5 Will furnish, before the award of the **Contract**, all information and reports, including an employment report, that are required by E.O. 50, the rules and regulations promulgated thereunder, and orders of the **City** Department of Business Services, Division of Labor Services (**DLS**) and will permit access to its books, records, and accounts by the **DLS** for the purposes of investigation to ascertain compliance with such rules, regulations, and orders.

36.4 The **Contractor** understands that in the event of its noncompliance with the nondiscrimination clauses of this **Contract** or with any of such rules, regulations, or orders, such noncompliance shall constitute a material breach of this **Contract** and noncompliance with E.O. 50 and the rules and regulations promulgated thereunder. After a hearing held pursuant to the rules of the **DLS**, the Director of the **DLS** may direct the **Commissioner** to impose any or all of the following sanctions:

36.4.1 Disapproval of the **Contractor**; and/or

36.4.2 Suspension or termination of the **Contract**; and/or

36.4.3 Declaring the **Contractor** in default; and/or

36.4.4 In lieu of any of the foregoing sanctions, the Director of the **DLS** may impose an employment program.

In addition to any actions taken under this **Contract**, failure to comply with E.O. 50 and the rules and regulations promulgated thereunder, in one or more instances, may result in a **City Agency** declaring the **Contractor** to be non-responsible in future procurements. The **Contractor** further agrees that it will refrain from entering into any **Contract** or **Contract** modification subject to E.O. 50 and the rules and regulations promulgated thereunder with a **Subcontractor** who is not in compliance with the requirements of E.O. 50 and the rules and regulations promulgated thereunder.

36.5 The **Contractor** specifically agrees, as required by Section 6-123 of the Administrative Code, that:

36.5.1 The **Contractor** will not engage in any unlawful discriminatory practice in violation of Title 8 of the Administrative Code; and

36.5.2 Any failure to comply with this Article 36.5 may subject the **Contractor** to the remedies set forth in Section 6-123 of the Administrative Code, including, where appropriate, sanctions such as withholding of payment, imposition of an employment program, finding the **Contractor** to be in default, cancellation of the **Contract**, or any other sanction or remedy provided by **Law** or **Contract**.

ARTICLE 37. LABOR LAW REQUIREMENTS

37.1 The **Contractor** shall strictly comply with all applicable provisions of the Labor Law, as amended. Such compliance is a material term of this **Contract**.

37.2 The **Contractor** specifically agrees, as required by Labor Law Sections 220 and 220-d, as amended, that:

37.2.1 Hours of **Work**: No laborer, worker, or mechanic in the employ of the **Contractor**, **Subcontractor** or other person doing or contracting to do the whole or a part of the **Work** contemplated by this **Contract** shall be permitted or required to work more than eight (8) hours in any one (1) **Day**, or more than five (5) **Days** in any one (1) week, except as provided in the Labor Law and in cases of extraordinary emergency including fire, flood, or danger to life or property, or in the case of national emergency when so proclaimed by the President of the United States of America.

37.2.2 In situations in which there are not sufficient laborers, workers, and mechanics who may be employed to carry on expeditiously the **Work** contemplated by this **Contract** as a result of such restrictions upon the number of hours and **Days** of labor, and the immediate commencement or prosecution or completion without undue delay of the **Work** is necessary for the preservation of the **Site** and/or for the protection of the life and limb of the persons using the same, such laborers, workers, and mechanics shall be permitted or required to work more than eight (8) hours in any one (1) **Day**; or five (5) **Days** in any one (1) week; provided, however, that upon application of any **Contractor**, the **Commissioner** shall have first certified to the Commissioner of Labor of the State of New York (hereinafter "Commissioner of Labor") that such public **Work** is of an important nature and that a delay in carrying it to completion would result in serious disadvantage to the public; and provided, further, that such Commissioner of Labor shall have determined that such an emergency does in fact exist as provided in Labor Law Section 220.2.

37.2.3 Failure of the **Commissioner** to make such a certification to the Commissioner of Labor shall not entitle the **Contractor** to damages for delay or for any cause whatsoever.

37.2.4 Prevailing Rate of Wages: The wages to be paid for a legal day's **Work** to laborers, workers, or mechanics employed upon the **Work** contemplated by this **Contract** or upon any materials to be used thereon shall not be less than the "prevailing rate of wage" as defined in Labor Law Section 220, and as fixed by the **Comptroller** in the attached Schedule of Wage Rates and in updated schedules thereof. The prevailing wage rates and supplemental benefits to be paid are those in effect at the time the **Work** is being performed.

37.2.5 Requests for interpretation or correction in the Information for Bidders includes all requests for clarification of the classification of trades to be employed in the performance of the **Work** under this **Contract**. In the event that a trade not listed in the **Contract** is in fact employed during the performance of this **Contract**, the **Contractor** shall be required to obtain from the **Agency** the prevailing wage rates and supplementary benefits for the trades used and to complete the performance of this **Contract** at the price at which the **Contract** was awarded.

37.2.6 Minimum Wages: Except for employees whose wage is required to be fixed pursuant to Labor Law Section 220, all persons employed by the **Contractor** and any **Subcontractor** in the manufacture or furnishing of the supplies, materials, or equipment, or the furnishing of work, labor, or services, used in the performance of this **Contract**, shall be paid, without subsequent deduction or rebate unless expressly authorized by **Law**, not less than the sum mandated by **Law**.

37.3 Working Conditions: No part of the **Work**, labor or services shall be performed or rendered by the **Contractor** in any plants, factories, buildings or surroundings or under working conditions which are unsanitary or hazardous or dangerous to the health and safety of employees engaged in the performance of this **Contract**. Compliance with the safety, sanitary, and factory inspection **Laws** of the state in which the **Work** is to be performed shall be prima facie evidence of compliance with this Article 37.3.

37.4 Prevailing Wage Enforcement: The **Contractor** agrees to pay for all costs incurred by the **City** in enforcing prevailing wage requirements, including the cost of any investigation conducted by or on behalf of the **Agency** or the **Comptroller,** where the **City** discovers a failure to comply with any of the requirements of this Article 37 by the **Contractor** or its **Subcontractor(s)**. The **Contractor** also agrees that, should it fail or refuse to pay for any such investigation, the **Agency** is hereby authorized to deduct from a **Contractor's** account an amount equal to the cost of such investigation.

37.4.1 The Labor Law Section 220 and Section 220-d, as amended, provide that this **Contract** shall be forfeited and no sum paid for any **Work** done hereunder on a second conviction for willfully paying less than:

37.4.1(a) The stipulated prevailing wage scale as provided in Labor Law section 220, as amended, or

37.4.1(b) The stipulated minimum hourly wage scale as provided in Labor Law section 220-d, as amended.

37.4.2 For any breach or violation of either working conditions (Article 37.3) or minimum wages (Article 37.2.6) provisions, the party responsible therefor shall be liable to the **City** for liquidated damages, which may be withheld from any amounts due on any contracts with the **City** of such party responsible, or may be recovered in actions brought by the **City**

Corporation Counsel in the name of the **City**, in addition to damages for any other breach of this **Contract**, for a sum equal to the amount of any underpayment of wages due to any employee engaged in the performance of this **Contract**. In addition, the **Commissioner** shall have the right to cancel contracts and enter into other contracts for the completion of the original contract, with or without public letting, and the original **Contractor** shall be liable for any additional cost. All sums withheld or recovered as deductions, rebates, refunds, or underpayment of wages hereunder, shall be held in a special deposit account and shall be paid without interest, on order of the **Comptroller**, directly to the employees who have been paid less than minimum rates of pay as set forth herein and on whose account such sums were withheld or recovered, provided that no claims by employees for such payments shall be entertained unless made within two (2) years from the date of actual notice to the **Contractor** of the withholding or recovery of such sums by the **City**.

37.4.3 A determination by the **Comptroller** that a **Contractor** and/or its **Subcontractor** willfully violated Labor Law Section 220 will be forwarded to the **City's** five District Attorneys for review.

37.4.4 The **Contractor's** or **Subcontractor's** noncompliance with this Article 37.4 and Labor Law Section 220 may result in an unsatisfactory performance evaluation and the **Comptroller** may also find and determine that the **Contractor** or **Subcontractor** willfully violated the New York Labor **Law**.

37.4.4(a) An unsatisfactory performance evaluation for noncompliance with this Article 37.4 may result in a determination that the **Contractor** is a non-responsible bidder on subsequent procurements with the **City** and thus a rejection of a future award of a contract with the **City**, as well as any other sanctions provided for by **Law**.

37.4.4(b) Labor Law Section 220-b, as amended, provides that when two (2) final determinations have been rendered against a **Contractor** or **Subcontractor** within any consecutive six (6) year period determining that such **Contractor** or **Subcontractor** has willfully failed to pay the prevailing rate of wages or to provide supplements in accordance with the Labor Law and this Article 37.4, whether such failures were concurrent or consecutive and whether or not such final determinations concerning separate public works projects are rendered simultaneously, such **Contractor** or **Subcontractor** shall be ineligible to submit a bid on or be awarded any public works contract with the **City** for a period of five (5) years from the second final determination. If the final determination involves the falsification of payroll records or the kickback of wages or supplements, the **Contractor** or **Subcontractor** shall be ineligible to submit a bid on or be awarded any public works contract with the **City** for a period of five (5) years from the first final determination.

37.4.4(c) Labor Law Section 220, as amended, provides that the **Contractor** or **Subcontractor** found to have violated this Article 37.4 may be directed to make payment of wages or supplements including interest found to be due, and the **Contractor** or **Subcontractor** may be directed to make payment of a further sum as a civil penalty in an amount not exceeding twenty-five (25%) percent of the total amount found to be due.

37.5 The **Contractor** and its **Subcontractors** shall within ten (10) **Days** after mailing of a Notice of Award or written order, post in prominent and conspicuous places in each and every plant, factory, building, and structure where employees of the **Contractor** and its **Subcontractors** engaged in the

performance of this **Contract** are employed, notices furnished by the **City**, in relation to prevailing wages and supplements, minimum wages, and other stipulations contained in Sections 220 and 220-h of the Labor Law, and the **Contractor** and its **Subcontractors** shall continue to keep such notices posted in such prominent and conspicuous places until **Final Acceptance** of the supplies, materials, equipment, or **Work**, labor, or services required to be furnished or rendered under this **Contract**.

37.6 The **Contractor** shall strictly comply with all of the provisions of Articles 37.6.1 through 37.6.5, and provide for all workers, laborers or mechanics in its employ, the following:

37.6.1 Notices Posted At **Site**: Post, in a location designated by the **City**, schedules of prevailing wages and supplements for this **Project**, a copy of all re-determinations of such schedules for the **Project**, the Workers' Compensation **Law** Section 51 notice, all other notices required by **Law** to be posted at the **Site**, the **City** notice that this **Project** is a public works project on which each worker is entitled to receive the prevailing wages and supplements for the occupation at which he or she is working, and all other notices which the **City** directs the **Contractor** to post. The **Contractor** shall provide a surface for such notices which is satisfactory to the **City**. The **Contractor** shall maintain and keep current such notices in a legible manner and shall replace any notice or schedule which is damaged, defaced, illegible or removed for any reason. The **Contractor** shall post such notices before commencing any **Work** on the **Site** and shall maintain such notices until all **Work** on the **Site** is complete; and

37.6.2 Daily **Site** Sign-in Sheets: Maintain daily **Site** sign-in sheets, and require that **Subcontractors** maintain daily **Site** sign-in sheets for its employees, which include blank spaces for an employee's name to be both printed and signed, job title, date started and Social Security number, the time the employee began work and the time the employee left work, until **Final Acceptance** of the supplies, materials, equipment, or **Work**, labor, or services to be furnished or rendered under this **Contract** unless exception is granted by the **Comptroller** upon application by the **Agency**. In the alternative, subject to the approval of the **CCPO**, the **Contractor** and **Subcontractor** may maintain an electronic or biometric sign-in system, which provides the information required by this Article 37.6.2; and

37.6.3 Individual Employee Information Notices: Distribute a notice to each worker, laborer or mechanic employed under this **Contract**, in a form provided by the **Agency**, that this **Project** is a public works project on which each worker, laborer or mechanic is entitled to receive the prevailing rate of wages and supplements for the occupation at which he or she is working. If the total cost of the **Work** under this **Contract** is at least two hundred fifty thousand ($250,000) dollars, such notice shall also include a statement that each worker, laborer or mechanic must be certified prior to performing any **Work** as having successfully completed a course in construction safety and health approved by the United States Department of Labor's Occupational Safety and Health Administration that is at least ten (10) hours in duration. Such notice shall be distributed to each worker before he or she starts performing any **Work** of this **Contract** and with the first paycheck after July first of each year. "Worker, laborer or mechanic" includes employees of the **Contractor** and all **Subcontractors** and all employees of suppliers entering the **Site**. At the time of distribution, the **Contractor** shall have each worker, laborer or mechanic sign a statement, in a form provided by the **Agency**, certifying that the worker has received the notice required by this Article 37.6.3, which signed statement shall be maintained with the payroll records required by this **Contract**; and

37.6.3(a) The **Contractor** and each **Subcontractor** shall notify each worker, laborer or mechanic employed under this **Contract** in writing of the prevailing rate of

wages for their particular job classification. Such notification shall be given to every worker, laborer, and mechanic on their first pay stub and with every pay stub thereafter; and

37.6.4 **Site** Laminated Identification Badges: The **Contractor** shall provide laminated identification badges which include a photograph of the worker's, laborer's or mechanic's face and indicate the worker's, laborer's or mechanic's name, trade, employer's name, and employment starting date (month/day/year). Further, the **Contractor** shall require as a condition of employment on the **Site**, that each and every worker, laborer or mechanic wear the laminated identification badge at all times and that it may be seen by any representative of the **City**. The **Commissioner** may grant a written waiver from the requirement that the laminated identification badge include a photograph if the **Contractor** demonstrates that the identity of an individual wearing a laminated identification badge can be easily verified by another method; and

37.6.5 Language Other Than English Used On **Site**: Provide the **ACCO** notice when three (3) or more employees (worker and/or laborer and/or mechanic) on the **Site**, at any time, speak a language other than English. The **ACCO** will then provide the **Contractor** the notices described in Article 37.6.1 in that language or languages as may be required. The **Contractor** is responsible for all distributions under this Article 37; and

37.6.6 Provision of Records: The **Contractor** and **Subcontractor(s)** shall produce within five (5) **Days** on the **Site** of the **Work** and upon a written order of the **Engineer**, the **Commissioner**, the **ACCO**, the **Agency EAO**, or the **Comptroller,** such records as are required to be kept by this Article 37.6; and

37.6.7 The **Contractor** and **Subcontractor(s)** shall pay employees by check or direct deposit. If this **Contract** is for an amount greater than one million ($1,000,000) dollars, checks issued by the **Contractor** to covered employees shall be generated by a payroll service or automated payroll system (an in-house system may be used if approved by the **Agency**). For any subcontract for an amount greater than seven hundred fifty thousand ($750,000) dollars, checks issued by a **Subcontractor** to covered employees shall be generated by a payroll service or automated payroll system (an in-house system may be used if approved by the **Agency**); and

37.6.8 The failure of the **Contractor** or **Subcontractor(s)** to comply with the provisions of Articles 37.6.1 through 37.6.7 may result in the **Commissioner** declaring the **Contractor** in default and/or the withholding of payments otherwise due under the **Contract**.

37.7 The **Contractor** and its **Subcontractors** shall keep such employment and payroll records as are required by Section 220 of the Labor Law. The failure of the **Contractor** or **Subcontractor(s)** to comply with the provisions of this Article 37.7 may result in the **Commissioner** declaring the **Contractor** in default and/or the withholding of payments otherwise due under the **Contract.**

37.8 At the time the **Contractor** makes application for each partial payment and for final payment, the **Contractor** shall submit to the **Commissioner** a written payroll certification, in the form provided by this **Contract**, of compliance with the prevailing wage, minimum wage, and other provisions and stipulations required by Labor Law Section 220 and of compliance with the training requirements of Labor Law Section 220-h set forth in Article 35.2. This certification of compliance shall be a condition precedent to payment and no payment shall be made to the **Contractor** unless and until each such certification shall have been submitted to and received by the **Commissioner.**

37.9 This **Contract** is executed by the **Contractor** with the express warranty and representation that the **Contractor** is not disqualified under the provisions of Section 220 of the Labor Law from the award of the **Contract**.

37.10 Any breach or violation of any of the foregoing shall be deemed a breach or violation of a material provision of this **Contract**, and grounds for cancellation thereof by the **City**.

ARTICLE 38. PAYROLL REPORTS

38.1 The **Contractor** and its **Subcontractor(s)** shall maintain on the **Site** during the performance of the **Work** the original payrolls or transcripts thereof which the **Contractor** and its **Subcontractor(s)** are required to maintain and shall submit such original payrolls or transcripts, subscribed and affirmed by it as true, within thirty (30) **Days** after issuance of its first payroll, and every thirty (30) **Days** thereafter, pursuant to Labor Law Section 220(3-a)(a)(iii). The **Contractor** and **Subcontractor(s)** shall submit such original payrolls or transcripts along with each and every payment requisition. If payment requisitions are not submitted at least once a month, the **Contractor** and its **Subcontractor(s)** shall submit original payrolls and transcripts both along with its payment requisitions and independently of its payment requisitions.

38.2 The **Contractor** shall maintain payrolls or transcripts thereof for six (6) years from the date of completion of the **Work** on this **Contract**. If such payrolls and transcripts are maintained outside of New York City after the completion of the **Work** and their production is required pursuant to this Article 38, the **Contractor** shall produce such records in New York City upon request by the City.

38.3 The **Contractor** and **Subcontractor(s)** shall comply with any written order, direction, or request made by the **Engineer**, the **Commissioner**, the **ACCO**, the **Agency EAO**, the **Agency Labor Law Investigator(s)**, or the **Comptroller**, to provide to the requesting party any of the following information and/or records within five (5) **Days** of such written order, direction, or request:

38.3.1 Such original payrolls or transcripts thereof subscribed and affirmed by it as true and the statements signed by each worker pursuant to this Chapter VIII; and/or

38.3.2 Attendance sheets for each **Day** on which any employee of the **Contractor** and/or any of the **Subcontractor(s)** performed **Work** on the **Site**, which attendance sheet shall be in a form acceptable to the **Agency** and shall provide information acceptable to the **Agency** to identify each such employee; and/or

38.3.3 Any other information to satisfy the **Engineer**, the **Commissioner**, the **ACCO**, the **Agency EAO**, the **Agency Labor Law Investigator(s)** or the **Comptroller**, that this Chapter VIII and the Labor Law, as to the hours of employment and prevailing rates of wages and/or supplemental benefits, are being observed.

38.4 The failure of the **Contractor** or **Subcontractor(s)** to comply with the provisions of Articles 38.1 and/or 38.2 may result in the **Commissioner** declaring the **Contractor** in default and/or the withholding of payments otherwise due under the **Contract**.

ARTICLE 39. DUST HAZARDS

39.1 Should a harmful dust hazard be created in performing the **Work** of this **Contract**, for the elimination of which appliances or methods have been approved by the Board of Standards and Appeals

of the City of New York, such appliances and methods shall be installed, maintained, and effectively operated during the continuance of such harmful dust hazard. Failure to comply with this provision after notice shall make this **Contract** voidable at the sole discretion of the **City**.

CHAPTER IX: PARTIAL AND FINAL PAYMENTS

ARTICLE 40. CONTRACT PRICE

40.1 The **City** shall pay, and the **Contractor** agrees to accept, in full consideration for the **Contractor's** performance of the **Work** subject to the terms and conditions hereof, the lump sum price or unit prices for which this **Contract** was awarded, plus the amount required to be paid for any **Extra Work** ordered by the **Commissioner** under Article 25, less credit for any **Work** omitted pursuant to Article 29.

ARTICLE 41. BID BREAKDOWN ON LUMP SUM

41.1 Within fifteen (15) **Days** after the commencement date specified in the **Notice to Proceed** or **Order to Work**, unless otherwise directed by the **Resident Engineer**, the **Contractor** shall submit to the **Resident Engineer** a breakdown of its bid price, or of lump sums bid for items of the **Contract**, showing the various operations to be performed under the **Contract**, as directed in the progress schedule required under Article 9, and the value of each of such operations, the total of such items to equal the lump sum price bid. Said breakdown must be approved in writing by the **Resident Engineer**.

41.2 No partial payment will be approved until the **Contractor** submits a bid breakdown that is acceptable to the **Resident Engineer**.

41.3 The **Contractor** shall also submit such other information relating to the bid breakdown as directed by the **Resident Engineer**. Thereafter, the breakdown may be used only for checking the **Contractor's** applications for partial payments hereunder, but shall not be binding upon the **City**, the **Commissioner**, or the **Engineer** for any purpose whatsoever.

ARTICLE 42. PARTIAL PAYMENTS

42.1 From time to time as the **Work** progresses satisfactorily, but not more often than once each calendar month (except where the **Commissioner** approves in writing the submission of invoices on a more frequent basis and for invoices relating to **Work** performed pursuant to a change order), the **Contractor** may submit to the **Engineer** a requisition for a partial payment in the prescribed form, which shall contain an estimate of the quantity and the fair value of the **Work** done during the payment period.

42.2 Partial payments may be made for materials, fixtures, and equipment in advance of their actual incorporation in the **Work**, as the **Commissioner** may approve, and upon the terms and conditions set forth in the General Conditions.

42.3 The **Contractor** shall also submit to the **Commissioner** in connection with every application for partial payment a verified statement in the form prescribed by the **Comptroller** setting forth the information required under Labor Law Section 220-a.

42.4 Within thirty (30) **Days** after receipt of a satisfactory payment application, and within sixty (60) **Days** after receipt of a satisfactory payment application in relation to **Work** performed pursuant to a change order, the **Engineer** will prepare and certify, and the **Commissioner** will approve, a voucher for a partial payment in the amount of such approved estimate, less any and all deductions authorized to be made by the **Commissioner** under the terms of this **Contract** or by **Law**.

ARTICLE 43. PROMPT PAYMENT

43.1 The Prompt Payment provisions of the **PPB** Rules in effect at the time of the bid will be applicable to payments made under this **Contract**. The provisions require the payment to the **Contractor** of interest on payments made after the required payment date, except as set forth in the **PPB** Rules.

43.2 The **Contractor** shall submit a proper invoice to receive payment, except where the **Contract** provides that the **Contractor** will be paid at predetermined intervals without having to submit an invoice for each scheduled payment.

43.3 Determination of interest due will be made in accordance with the **PPB** Rules.

43.4 If the **Contractor** is paid interest, the proportionate share(s) of that interest shall be forwarded by the **Contractor** to its **Subcontractor(s)**.

43.5 The **Contractor** shall pay each **Subcontractor** or **Materialman** not later than seven (7) **Days** after receipt of payment out of amounts paid to the **Contractor** by the **City** for **Work** performed by the **Subcontractor** or **Materialman** under this **Contract**.

> 43.5.1 If **Contractor** fails to make any payment to any **Subcontractor** or **Materialman** within seven (7) **Days** after receipt of payment by the **City** pursuant to this Article 43.5, then the **Contractor** shall pay interest on amounts due to such **Subcontractor** or **Materialman** at the rate of interest in effect on the date such payment is made by the **Contractor** computed in accordance with Section 756-b (1)(b) of the New York General Business Law. Accrual of interest shall commence on the **Day** immediately following the expiration of the seventh **Day** following receipt of payment by the **Contractor** from the **City** and shall end on the date on which payment is made.

43.6 The **Contractor** shall include in each of its subcontracts a provision requiring each **Subcontractor** to make payment to each of its **Subcontractors** or **Materialmen** for **Work** performed under this **Contract** in the same manner and within the same time period set forth above.

ARTICLE 44. SUBSTANTIAL COMPLETION PAYMENT

44.1 The **Contractor** shall submit with the **Substantial Completion** requisition:

> 44.1.1 A final verified statement of any pending Article 27 disputes in accordance with the **PPB** Rules and this **Contract** and any and all alleged claims against the **City**, in any way connected with or arising out of this **Contract** (including those as to which details may have been furnished pursuant to Articles 11, 27, 28, and 30) setting forth with respect to each such claim the total amount thereof, the various items of labor and materials included therein, and the alleged value of each item; and if the alleged claim be one for delay, the alleged cause of each such delay, the period or periods of time, giving the dates when the

Contractor claims the performance of the **Work** or a particular part thereof was delayed, and an itemized statement and breakdown of the amount claimed for each such delay.

44.1.1(a) With respect to each such claim, the **Commissioner**, the **Comptroller** and, in the event of litigation, the **City** Corporation Counsel shall have the same right to inspect, and to make extracts or copies of, the **Contractor's** books, vouchers, records, etc., as is referred to in Articles 11, 27, 28, and 30. Nothing contained in this Article 44.1.1(a) is intended to or shall relieve the **Contractor** from the obligation of complying strictly with Articles 11, 27, 28, and 30. The **Contractor** is warned that unless such claims are completely set forth as herein required, the **Contractor** upon acceptance of the **Substantial Completion** payment pursuant to this Article 44, will have waived any such claims.

44.1.2 A **Final Approved Punch List.**

44.1.3 Where required, a request for an extension of time to achieve **Substantial Completion** or final extension of time.

44.2 The **Commissioner** shall issue a voucher calling for payment of any part or all of the balance due for **Work** performed under the **Contract**, including monies retained under Article 21, less any and all deductions authorized to be made by the **Commissioner**, under this **Contract** or by **Law**, and less twice the amount the **Commissioner** considers necessary to ensure the completion of the balance of the **Work** by the **Contractor**. Such a payment shall be considered a partial and not a final payment. No **Substantial Completion** payment shall be made under this Article 44 where the **Contractor** failed to complete the **Work** within the time fixed for such completion in the Schedule A of the General Conditions, or within the time to which completion may have been extended, until an extension or extensions of time for the completion of **Work** have been acted upon pursuant to Article 13.

44.3 No further partial payments shall be made to the **Contractor** after **Substantial Completion**, except the **Substantial Completion** payment and payment pursuant to any **Contractor's** requisition that were properly filed with the **Commissioner** prior to the date of **Substantial Completion**; however, the **Commissioner** may grant a waiver for further partial payments after the date of **Substantial Completion** to permit payments for change order **Work** and/or release of retainage and deposits pursuant to Articles 21 and 24. Such waiver shall be in writing.

44.4 The **Contractor** acknowledges that nothing contained in this Article 44 is intended to or shall in any way diminish the force and effect of Article 13.

ARTICLE 45. FINAL PAYMENT

45.1 After completion and **Final Acceptance** of the **Work**, the **Contractor** shall submit all required certificates and documents, together with a requisition for the balance claimed to be due under the **Contract**, less the amount authorized to be retained for maintenance under Article 24. Such submission shall be within 90 days of the date of the **Commissioner's** written determination of **Final Acceptance**, or within such additional time as may be granted by the **Commissioner** in writing. If the **Contractor** fails to submit all required certificates and documents within the time allowed, no payment of the balance claimed shall be made to the **Contractor** and the **Contractor** shall be deemed to have forfeited its right to payment of any balance claimed. A verified statement similar to that required in connection with applications for partial payments shall also be submitted to the **Commissioner**.

45.2 Amended Verified Statement of Claims: The **Contractor** shall also submit with the final requisition any amendments to the final verified statement of any pending dispute resolution procedures in accordance with the **PPB** Rules and this **Contract** and any and all alleged claims against the **City**, in any way connected with or arising out of this **Contract** (including those as to which details may have been furnished pursuant to Articles 11, 27, 28, and 30) that have occurred subsequent to **Substantial Completion**, setting forth with respect to each such claim the total amount thereof, the various items of labor and materials included therein, and the alleged value of each such item; and if the alleged claim be one for delay, the alleged cause of each such delay, the period or periods of time, giving the dates when the **Contractor** claims the performance of the **Work** or a particular part thereof was delayed, and an itemized statement and breakdown of the amount claimed for each such delay. With reference to each such claim, the **Commissioner**, the **Comptroller** and, in the event of litigation, the **City** Corporation Counsel shall have the same right to inspect, and to make extracts or copies of, the **Contractor's** books, vouchers, records, etc., as is referred to in Articles 11, 27, 28, and 30. Nothing contained in this Article 45.2, is intended to or shall relieve the **Contractor** from the obligation of complying strictly with Articles 11, 27, 28, and 30. The **Contractor** is warned that unless such claims are completely set forth as herein required, the **Contractor**, upon acceptance of the Final Payment pursuant to Article 46, will have waived any such claims.

45.3 Preparation of Final Voucher: Upon determining the balance due hereunder other than on account of claims, the **Engineer** will prepare and certify, for the Commissioner's approval, a voucher for final payment in that amount less any and all deductions authorized to be made by the **Commissioner** under this **Contract** or by **Law**. In the case of a lump sum **Contract**, the **Commissioner** shall certify the voucher for final payment within thirty (30) **Days** from the date of completion and acceptance of the **Work**, provided all requests for extensions of time have been acted upon.

45.3.1 All prior certificates and vouchers upon which partial payments were made, being merely estimates made to enable the **Contractor** to prosecute the **Work** more advantageously, shall be subject to correction in the final voucher, and the certification of the **Engineer** thereon and the approval of the **Commissioner** thereof, shall be conditions precedent to the right of the **Contractor** to receive any money hereunder. Such final voucher shall be binding and conclusive upon the **Contractor**.

45.3.2 Payment pursuant to such final voucher, less any deductions authorized to be made by the **Commissioner** under this **Contract** or by **Law**, shall constitute the final payment, and shall be made by the **Comptroller** within thirty (30) **Days** after the filing of such voucher in his/her office.

45.4 The **Contractor** acknowledges that nothing contained in this Article 45 is intended to or shall in any way diminish the force and effect of Article 13.

ARTICLE 46. ACCEPTANCE OF FINAL PAYMENT

46.1 The acceptance by the **Contractor**, or by anyone claiming by or through it, of the final payment, whether such payment be made pursuant to any judgment of any court, or otherwise, shall constitute and operate as a release of the **City** from any and all claims of and liability to the **Contractor** for anything heretofore done or furnished for the **Contractor** relating to or arising out of this **Contract** and the **Work** done hereunder, and for any prior act, neglect or default on the part of the **City** or any of its officials, agents or employees, excepting only a claim against the **City** for the amounts deducted or retained in accordance with the terms and provisions of this **Contract** or by **Law**, and excepting any claims, not otherwise waived, or any pending dispute resolution procedures which are contained in the

verified statement filed with the **Contractor's** substantial and final requisitions pursuant to Articles 44 and 45.

46.2 The **Contractor** is warned that the execution by it of a release, in connection with the acceptance of the final payment, containing language purporting to reserve claims other than those herein specifically excepted from the operation of this Article 46, or those for amounts deducted by the **Commissioner** from the final requisition or from the final payment as certified by the **Engineer** and approved by the **Commissioner**, shall not be effective to reserve such claims, anything stated to the **Contractor** orally or in writing by any official, agent or employee of the **City** to the contrary notwithstanding.

46.3 Should the **Contractor** refuse to accept the final payment as tendered by the **Comptroller**, it shall constitute a waiver of any right to interest thereon.

46.4 The **Contractor**, however, shall not be barred by this Article 46 from commencing an action for breach of **Contract** to the extent permitted by **Law** and by the terms of the **Contract** for any claims that are contained in the verified statement filed with the **Contractor's** substantial and final requisitions pursuant to Articles 44 and 45 or that arose after submission of the final payment requisition, provided that a detailed and verified statement of claim is served upon the contracting **Agency** and **Comptroller** not later than forty (40) **Days** after the making of such final payment by electronic funds transfer (EFT) or the mailing of such final payment. The statement shall specify the items upon which the claim will be based and any such claim shall be limited to such items.

ARTICLE 47. APPROVAL BY PUBLIC DESIGN COMMISSION

47.1 All works of art, including paintings, mural decorations, stained glass, statues, bas-reliefs, and other sculptures, monuments, fountains, arches, and other structures of a permanent character intended for ornament or commemoration, and every design of the same to be used in the performance of this **Contract**, and the design of all bridges, approaches, buildings, gates, fences, lamps, or structures to be erected, pursuant to the terms of this **Contract**, shall be submitted to the Art Commission, d/b/a the Public Design Commission of the City of New York, and shall be approved by the Public Design Commission prior to the erection or placing in position of the same. The final payment shall not become due or payable under this **Contract** unless and until the Public Design Commission shall certify that the design for the **Work** herein contracted for has been approved by the said Public Design Commission, and that the same has been executed in substantial accordance with the design so approved, pursuant to the provisions of Chapter 37, Section 854 of the **City** Charter, as amended.

CHAPTER X: CONTRACTOR'S DEFAULT

ARTICLE 48. COMMISSIONER'S RIGHT TO DECLARE CONTRACTOR IN DEFAULT

48.1 In addition to those instances specifically referred to in other Articles herein, the **Commissioner** shall have the right to declare the **Contractor** in default of this **Contract** if:

48.1.1 The **Contractor** fails to commence **Work** when notified to do so by the **Commissioner**; or if

48.1.2 The **Contractor** shall abandon the **Work**; or if

48.1.3 The **Contractor** shall refuse to proceed with the **Work** when and as directed by the **Commissioner**; or if

48.1.4 The **Contractor** shall, without just cause, reduce its working force to a number which, if maintained, would be insufficient, in the opinion of the **Commissioner**, to complete the **Work** in accordance with the progress schedule; or if

48.1.5 The **Contractor** shall fail or refuse to increase sufficiently such working force when ordered to do so by the **Commissioner**; or if

48.1.6 The **Contractor** shall sublet, assign, transfer, convert or otherwise dispose of this **Contract** other than as herein specified; or sell or assign a majority interest in the **Contractor**; or if

48.1.7 The **Contractor** fails to secure and maintain all required insurance; or if

48.1.8 A receiver or receivers are appointed to take charge of the **Contractor's** property or affairs; or if

48.1.9 The **Commissioner** shall be of the opinion that the **Contractor** is or has been unnecessarily or unreasonably or willfully delaying the performance and completion of the **Work**, or the award of necessary subcontracts, or the placing of necessary material and equipment orders; or if

48.1.10 The **Commissioner** shall be of the opinion that the **Contractor** is or has been willfully or in bad faith violating any of the provisions of this **Contract**; or if

48.1.11 The **Commissioner** shall be of the opinion that the **Work** cannot be completed within the time herein provided therefor or within the time to which such completion may have been extended; provided, however, that the impossibility of timely completion is, in the **Commissioner's** opinion, attributable to conditions within the **Contractor's** control; or if

48.1.12 The **Work** is not completed within the time herein provided therefor or within the time to which the **Contractor** may be entitled to have such completion extended; or if

48.1.13 Any statement or representation of the **Contractor** in the **Contract** or in any document submitted by the **Contractor** with respect to the **Work**, the **Project**, or the **Contract** (or for purposes of securing the **Contract**) was untrue or incorrect when made; or if

48.1.14 The **Contractor** or any of its officers, directors, partners, five (5%) percent shareholders, principals, or other persons substantially involved in its activities, commits any of the acts or omissions specified as the grounds for debarment in the **PPB** Rules.

48.2 Before the **Commissioner** shall exercise his/her right to declare the **Contractor** in default, the **Commissioner** shall give the **Contractor** an opportunity to be heard, upon not less than two (2) **Days'** notice.

ARTICLE 49. EXERCISE OF THE RIGHT TO DECLARE DEFAULT

49.1 The right to declare the **Contractor** in default for any of the grounds specified or referred to in Article 48 shall be exercised by sending the **Contractor** a notice, signed by the **Commissioner**, setting forth the ground or grounds upon which such default is declared (hereinafter referred to as a "Notice of Default").

49.2 The **Commissioner's** determination that the **Contractor** is in default shall be conclusive, final, and binding on the parties and such a finding shall preclude the **Contractor** from commencing a plenary action for any damages relating to the **Contract**. If the **Contractor** protests the determination of the **Commissioner**, the **Contractor** may commence an action in a court of competent jurisdiction of the State of New York under Article 78 of the New York Civil Practice Law and Rules.

ARTICLE 50. QUITTING THE SITE

50.1 Upon receipt of such notice the **Contractor** shall immediately discontinue all further operations under this **Contract** and shall immediately quit the **Site**, leaving untouched all plant, materials, equipment, tools, and supplies then on the **Site**.

ARTICLE 51. COMPLETION OF THE WORK

51.1 The **Commissioner**, after declaring the **Contractor** in default, may then have the **Work** completed by such means and in such manner, by contract with or without public letting, or otherwise, as he/she may deem advisable, utilizing for such purpose such of the **Contractor's** plant, materials, equipment, tools, and supplies remaining on the **Site**, and also such **Subcontractors**, as he/she may deem advisable.

51.2 After such completion, the **Commissioner** shall make a certificate stating the expense incurred in such completion, which shall include the cost of re-letting and also the total amount of liquidated damages (at the rate provided for in the **Contract**) from the date when the **Work** should have been completed by the **Contractor** in accordance with the terms hereof to the date of actual completion of the **Work**. Such certificate shall be binding and conclusive upon the **Contractor**, its sureties, and any person claiming under the **Contractor**, as to the amount thereof.

51.3 The expense of such completion, including any and all related and incidental costs, as so certified by the **Commissioner**, and any liquidated damages assessed against the **Contractor**, shall be charged against and deducted out of monies which are earned by the **Contractor** prior to the date of default. Should the expense of such completion, as certified by the **Commissioner**, exceed the total sum which would have been payable under the **Contract** if it had been completed by the **Contractor**, any excess shall be paid by the **Contractor**.

ARTICLE 52. PARTIAL DEFAULT

52.1 In case the **Commissioner** shall declare the **Contractor** in default as to a part of the **Work** only, the **Contractor** shall discontinue such part, shall continue performing the remainder of the **Work** in strict conformity with the terms of this **Contract**, and shall in no way hinder or interfere with any **Other Contractor(s)** or persons whom the **Commissioner** may engage to complete the **Work** as to which the **Contractor** was declared in default.

52.2 The provisions of this Chapter relating to declaring the **Contractor** in default as to the entire **Work** shall be equally applicable to a declaration of partial default, except that the **Commissioner** shall be entitled to utilize for completion of the part of the **Work** as to which the **Contractor** was declared in default only such plant, materials, equipment, tools, and supplies as had been previously used by the **Contractor** on such part.

ARTICLE 53. PERFORMANCE OF UNCOMPLETED WORK

53.1 In completing the whole or any part of the **Work** under the provisions of this Chapter X, the **Commissioner** shall have the power to depart from or change or vary the terms and provisions of this **Contract**, provided, however, that such departure, change or variation is made for the purpose of reducing the time or expense of such completion. Such departure, change or variation, even to the extent of accepting a lesser or different performance, shall not affect the conclusiveness of the **Commissioner's** certificate of the cost of completion referred to in Article 51, nor shall it constitute a defense to an action to recover the amount by which such certificate exceeds the amount which would have been payable to the **Contractor** hereunder but for its default.

ARTICLE 54. OTHER REMEDIES

54.1 In addition to the right to declare the **Contractor** in default pursuant to this Chapter X, the **Commissioner** shall have the absolute right, in his/her sole discretion and without a hearing, to complete or cause to be completed in the same manner as described in Articles 51 and 53, any or all unsatisfactory or uncompleted punch list **Work** that remains after the completion date specified in the **Final Approved Punch List**. A written notice of the exercise of this right shall be sent to the **Contractor** who shall immediately quit the **Site** in accordance with the provisions of Article 50.

54.2 The expense of completion permitted under Article 54.1, including any and all related and incidental costs, as so certified by the **Commissioner**, shall be charged against and deducted out of monies which have been earned by the **Contractor** prior to the date of the exercise of the right set forth in Article 54.1; the balance of such monies, if any, subject to the other provisions of this **Contract**, to be paid to the **Contractor** without interest after such completion. Should the expense of such completion, as certified by the **Commissioner**, exceed the total sum which would have been payable under the **Contract** if it had been completed by the **Contractor**, any excess shall be paid by the **Contractor**.

54.3 The previous provisions of this Chapter X shall be in addition to any and all other remedies available under **Law** or in equity.

54.4 The exercise by the **City** of any remedy set forth herein shall not be deemed a waiver by the **City** of any other legal or equitable remedy contained in this **Contract** or provided under **Law**.

CHAPTER XI: MISCELLANEOUS PROVISIONS

ARTICLE 55. CONTRACTOR'S WARRANTIES

55.1 In consideration of, and to induce, the award of this **Contract** to the **Contractor**, the **Contractor** represents and warrants:

55.1.1 That it is financially solvent, sufficiently experienced and competent to perform the **Work**; and

55.1.2 That the facts stated in its bid and the information given by it pursuant to the Information for Bidders is true and correct in all respects; and

55.1.3 That it has read and complied with all requirements set forth in the **Contract**.

ARTICLE 56. CLAIMS AND ACTIONS THEREON

56.1 Any claim, that is not subject to dispute resolution under the **PPB** Rules or this **Contract**, against the **City** for damages for breach of **Contract** shall not be made or asserted in any action, unless the **Contractor** shall have strictly complied with all requirements relating to the giving of notice and of information with respect to such claims, as herein before provided.

56.2 Nor shall any action be instituted or maintained on any such claims unless such action is commenced within six (6) months after **Substantial Completion**; except that:

56.2.1 Any claims arising out of events occurring after **Substantial Completion** and before **Final Acceptance** of the **Work** shall be asserted within six (6) months of **Final Acceptance** of the **Work**;

56.2.2 If the **Commissioner** exercises his/her right to complete or cause to complete any or all unsatisfactory or uncompleted punch list **Work** that remains after the completion date specified in the **Final Approved Punch List** pursuant to Article 54, any such action shall be commenced within six (6) months from the date the **Commissioner** notifies the **Contractor** in writing that he/she has exercised such right. Any claims for monies deducted, retained or withheld under the provisions of this **Contract** shall be asserted within six (6) months after the date when such monies otherwise become due and payable hereunder; and

56.2.3 If the **Commissioner** exercises his/her right to terminate the **Contract** pursuant to Article 64, any such action shall be commenced within six (6) months of the date the **Commissioner** exercises said right.

ARTICLE 57. INFRINGEMENT

57.1 The **Contractor** shall be solely responsible for and shall defend, indemnify, and hold the **City** harmless from any and all claims (even if the allegations of the lawsuit are without merit) and judgments for damages and from costs and expenses to which the **City** may be subject to or which it may suffer or incur allegedly arising out of or in connection with any infringement by the **Contractor** of any copyright, trade secrets, trademark or patent rights or any other property or personal right of any third party by the **Contractor** and/or its **Subcontractors** in the performance or completion of the **Work**. Insofar as the facts or **Law** relating to any claim would preclude the **City** from being completely indemnified by the **Contractor**, the **City** shall be partially indemnified by the **Contractor** to the fullest extent permitted by **Law**.

ARTICLE 58. NO CLAIM AGAINST OFFICIALS, AGENTS OR EMPLOYEES

58.1 No claim whatsoever shall be made by the **Contractor** against any official, agent or employee of the **City** for, or on account of, anything done or omitted to be done in connection with this **Contract**.

ARTICLE 59. SERVICE OF NOTICES

59.1 The **Contractor** hereby designates the business address, fax number, and email address specified in its bid, as the place where all notices, directions or other communications to the **Contractor** may be delivered, or to which they may be mailed. Any notice, direction, or communication from either party to the other shall be in writing and shall be deemed to have been given when (i) delivered personally; (ii) sent by certified mail, return receipt requested; (iii) delivered by overnight or same day courier service in a properly addressed envelope with confirmation; or (iv) sent by fax or email and, unless receipt of the fax or e-mail is acknowledged by the recipient by fax or e-mail, deposited in a post office box regularly maintained by the United States Postal Service in a properly addressed, postage pre-paid envelope.

59.2 **Contractor's** notice address, email address, or fax number may be changed at any time by an instrument in writing, executed and acknowledged by the **Contractor**, and delivered to the **Commissioner**.

59.3 Nothing herein contained shall, however, be deemed to preclude or render inoperative the service of any notice, direction or other communication upon the **Contractor** personally, or, if the **Contractor** is a corporation, upon any officer thereof.

ARTICLE 60. UNLAWFUL PROVISIONS DEEMED STRICKEN FROM CONTRACT

60.1 If this **Contract** contains any unlawful provision not an essential part of the **Contract** and which shall not appear to have been a controlling or material inducement to the making thereof, the same shall be deemed of no effect and shall, upon notice by either party, be deemed stricken from the **Contract** without affecting the binding force of the remainder.

ARTICLE 61. ALL LEGAL PROVISIONS DEEMED INCLUDED

61.1 It is the intent and understanding of the parties to this **Contract** that each and every provision of **Law** required to be inserted in this **Contract** shall be and is inserted herein. Furthermore, it is hereby stipulated that every such provision is to be deemed to be inserted herein, and if, through mistake or otherwise, any such provision is not inserted, or is not inserted in correct form, then this **Contract** shall forthwith upon the application of either party be amended by such insertion so as to comply strictly with the **Law** and without prejudice to the rights of either party hereunder.

ARTICLE 62. TAX EXEMPTION

62.1 The **City** is exempt from payment of Federal, State, and local taxes, including sales and compensating use taxes of the State of New York and its cities and counties on all tangible personal property sold to the **City** pursuant to the provisions of this **Contract**. These taxes are not to be included in bids. However, this exemption does not apply to tools, machinery, equipment or other property leased by or to the **Contractor**, **Subcontractor** or **Materialman** or to tangible personal property which, even

though it is consumed, is not incorporated into the completed **Work** (consumable supplies) and tangible personal property that the **Contractor** is required to remove from the **Site** during or upon completion of the **Work**. The **Contractor** and its **Subcontractors** and **Materialmen** shall be responsible for and pay any and all applicable taxes, including sales and compensating use taxes, on such leased tools, machinery, equipment or other property and upon all such consumable supplies and tangible personal property that the **Contractor** is required to remove from the **Site** during or upon completion of the **Work**.

62.2 The **Contractor** agrees to sell and the **City** agrees to purchase all tangible personal property, other than consumable supplies and other tangible personal property that the **Contractor** is required to remove from the **Site** during or upon completion of the **Work**, that is required, necessary or proper for or incidental to the construction of the **Project** covered by this **Contract**. The sum paid under this **Contract** for such tangible personal property shall be in full payment and consideration for the sale of such tangible personal property.

62.2.1 The **Contractor** agrees to construct the **Project** and to perform all **Work**, labor and services rendered, necessary, proper or incidental thereto for the sum shown in the bid for the performance of such **Work**, labor, and services, and the sum so paid pursuant to this **Contract** for such **Work**, labor, and services, shall be in full consideration for the performance by the **Contractor** of all its duties and obligations under this **Contract** in connection with said **Work**, labor, and services.

62.3 20 NYCRR Section 541.3(d) provides that a **Contractor**'s purchases of tangible personal property that is either incorporated into real property owned by a governmental entity or purchased for and sold to a governmental entity are exempt from sales and use tax. The **City** shall not pay sales tax for any such tangible personal property that it purchases from the **Contractor** pursuant to the **Contract.** With respect to such tangible personal property, the **Contractor**, at the request of the **City**, shall furnish to the **City** such bills of sale and other instruments as may be required by the **City**, properly executed, acknowledged and delivered assuring to the **City** title to such tangible personal property, free of liens and/or encumbrances, and the **Contractor** shall mark or otherwise identify all such tangible personal property as the property of the **City**.

62.4 Title to all tangible personal property to be sold by the **Contractor** to the **City** pursuant to the provisions of the **Contract** shall immediately vest in and become the sole property of the **City** upon delivery of such tangible personal property to the **Site**. Notwithstanding such transfer of title, the **Contractor** shall have the full and continuing responsibility to install such tangible personal property in accordance with the provisions of this **Contract**, protect it, maintain it in a proper condition and forthwith repair, replace and make good any damage thereto, theft or disappearance thereof, and furnish additional tangible personal property in place of any that may be lost, stolen or rendered unusable, without cost to the **City**, until such time as the **Work** covered by the **Contract** is fully accepted by the **City**. Such transfer of title shall in no way affect any of the **Contractor's** obligations hereunder. In the event that, after title has passed to the **City**, any of the tangible personal property is rejected as being defective or otherwise unsatisfactory, title to all such tangible personal property shall be deemed to have been transferred back to the **Contractor**.

62.5 The purchase by **Subcontractors** or **Materialmen** of tangible personal property to be sold hereunder shall be a purchase or procurement for resale to the **Contractor** (either directly or through other **Subcontractors**) and therefore not subject to the aforesaid sales and compensating use taxes, provided that the subcontracts and purchase agreements provide for the resale of such tangible personal property and that such subcontracts and purchase agreements are in a form similar to this **Contract** with respect to the separation of the sale of consumable supplies and tangible personal property that the

Contractor is required to remove from the **Site** during or upon completion of the **Work** from the **Work** and labor, services, and any other matters to be provided, and provided further that the subcontracts and purchase agreements provide separate prices for tangible personal property and all other services and matters. Such separation shall actually be followed in practice, including the separation of payments for tangible personal property from the payments for other **Work** and labor and other things to be provided.

62.6 The **Contractor** and its **Subcontractors** and **Materialmen** shall furnish a **Contractor** Exempt Purchase Certificate to all persons, firms or corporations from which they purchase tangible personal property for the performance of the **Work** covered by this **Contract.**

62.7 In the event any of the provisions of this Article 62 shall be deemed to be in conflict with any other provisions of this **Contract** or create any ambiguity, then the provisions of this Article 62 shall control.

ARTICLE 63. INVESTIGATION(S) CLAUSE

63.1 The parties to this **Contract** agree to cooperate fully and faithfully with any investigation, audit or inquiry conducted by a United States, a State of New York (State) or a **City** governmental agency or authority that is empowered directly or by designation to compel the attendance of witnesses and to examine witnesses under oath, or conducted by the Inspector General of a governmental agency that is a party in interest to the transaction, submitted bid, submitted proposal, contract, lease, permit or license that is the subject of the investigation, audit or inquiry.

63.2 If any person who has been advised that his/her statement, and any information from such statement, will not be used against him/her in any subsequent criminal proceeding refuses to testify before a grand jury or other governmental agency or authority empowered directly or by designation to compel the attendance of witnesses and to examine witnesses under oath concerning the award of or performance under any transaction, agreement, lease, permit, contract, or license entered into with the **City**, the State, or any political subdivision or public authority thereof, or the Port Authority of New York and New Jersey, or any local development corporation within the **City**, or any public benefit corporation organized under the **Laws** of the State of New York, or;

63.3 If any person refuses to testify for a reason other than the assertion of his/her privilege against self incrimination in an investigation, audit or inquiry conducted by a **City** or State governmental agency or authority empowered directly or by designation to compel the attendance of witnesses and to take testimony under oath, or by the Inspector General of the governmental agency that is a party in interest in, and is seeking testimony concerning the award of, or performance under any transaction, agreement, lease, permit, contract, or license entered into with the **City**, the State, or any political subdivision thereof or any local development corporation within the **City**, then;

63.4 The **Commissioner** whose **Agency** is a party in interest to the transaction, submitted bid, submitted proposal, contract, lease, permit, or license shall convene a hearing, upon not less than five (5) **Days**' written notice to the parties involved to determine if any penalties should attach for the failure of a person to testify.

63.5 If any non-governmental party to the hearing requests an adjournment, the **Commissioner** who convened the hearing may, upon granting the adjournment, suspend any contract, lease, permit, or license, pending the final determination pursuant to Article 63.7 without the **City** incurring any penalty or damages for delay or otherwise.

63.6 The penalties which may attach after a final determination by the **Commissioner** may include but shall not exceed:

63.6.1 The disqualification for a period not to exceed five (5) years from the date of an adverse determination for any person, or any entity of which such person was a member at the time the testimony was sought, from submitting bids for, or transacting business with, or entering into or obtaining any contract, lease, permit or license with or from the **City**; and/or

63.6.2 The cancellation or termination of any and all such existing **City** contracts, leases, permits or licenses that the refusal to testify concerns and that have not been assigned as permitted under this **Contract**, nor the proceeds of which pledged, to an unaffiliated and unrelated institutional lender for fair value prior to the issuance of the notice scheduling the hearing, without the **City** incurring any penalty or damages on account of such cancellation or termination; monies lawfully due for goods delivered, work done, rentals, or fees accrued prior to the cancellation or termination shall be paid by the **City**.

63.7 The **Commissioner** shall consider and address in reaching his/her determination and in assessing an appropriate penalty the factors in Articles 63.7.1 and 63.7.2. The **Commissioner** may also consider, if relevant and appropriate, the criteria established in Articles 63.7.3 and 63.7.4, in addition to any other information which may be relevant and appropriate:

63.7.1 The party's good faith endeavors or lack thereof to cooperate fully and faithfully with any governmental investigation or audit, including but not limited to the discipline, discharge, or disassociation of any person failing to testify, the production of accurate and complete books and records, and the forthcoming testimony of all other members, agents, assignees or fiduciaries whose testimony is sought.

63.7.2 The relationship of the person who refused to testify to any entity that is a party to the hearing, including but not limited to, whether the person whose testimony is sought has an ownership interest in the entity and/or the degree of authority and responsibility the person has within the entity.

63.7.3 The nexus of the testimony sought to the subject entity and its contracts, leases, permits or licenses with the **City**.

63.7.4 The effect a penalty may have on an unaffiliated and unrelated party or entity that has a significant interest in an entity subject to penalties under Article 63.6, provided that the party or entity has given actual notice to the **Commissioner** upon the acquisition of the interest, or at the hearing called for in Article 63.4, gives notice and proves that such interest was previously acquired. Under either circumstance the party or entity shall present evidence at the hearing demonstrating the potential adverse impact a penalty will have on such person or entity.

63.8 Definitions:

63.8.1 The term "license" or "permit" as used in this Article 63 shall be defined as a license, permit, franchise or concession not granted as a matter of right.

63.8.2 The term "person" as used in this Article 63 shall be defined as any natural person doing business alone or associated with another person or entity as a partner, director, officer, principal or employee.

63.8.3 The term "entity" as used in this Article 63 shall be defined as any firm, partnership, corporation, association, joint venture, or person that receives monies, benefits, licenses, leases, or permits from or through the **City** or otherwise transacts business with the **City**.

63.8.4 The term "member" as used in this Article 63 shall be defined as any person associated with another person or entity as a partner, director, officer, principal or employee.

63.9 In addition to and notwithstanding any other provision of this **Contract**, the **Commissioner** may in his/her sole discretion terminate this **Contract** upon not less than three (3) **Days'** written notice in the event the **Contractor** fails to promptly report in writing to the **Commissioner** of the Department of Investigations ("DOI") of the **City** any solicitation of money, goods, requests for future employment or other benefit or thing of value, by or on behalf of any employee of the **City** or other person, firm, corporation or entity for any purpose which may be related to the procurement or obtaining of this **Contract** by the **Contractor**, or affecting the performance of this **Contract**.

ARTICLE 64. TERMINATION BY THE CITY

64.1 In addition to termination pursuant to any other article of this **Contract**, the **Commissioner** may, at any time, terminate this **Contract** by written notice to the **Contractor**. In the event of termination, the **Contractor** shall, upon receipt of such notice, unless otherwise directed by the **Commissioner**:

64.1.1 Stop **Work** on the date specified in the notice;

64.1.2 Take such action as may be necessary for the protection and preservation of the **City's** materials and property;

64.1.3 Cancel all cancelable orders for material and equipment;

64.1.4 Assign to the **City** and deliver to the **Site** or another location designated by the **Commissioner**, any non-cancelable orders for material and equipment that is not capable of use except in the performance of this **Contract** and has been specifically fabricated for the sole purpose of this **Contract** and not incorporated in the **Work**;

64.1.5 Take no action which will increase the amounts payable by the **City** under this **Contract.**

64.2 In the event of termination by the **City** pursuant to this Article 64, payment to the **Contractor** shall be in accordance with Articles 64.2.1, 64.2.2 or 64.2.3, to the extent that each respective article applies.

64.2.1 Lump Sum Contracts or Items: On all lump sum **Contracts**, or on lump sum items in a **Contract**, the **City** will pay the **Contractor** the sum of the amounts described in Articles 64.2.1(a) and 64.2.1(b), less all payments previously made pursuant to this **Contract**. On lump sum **Contracts** only, the **City** will also pay the **Contractor** an additional sum as provided in Article 64.2.1(c).

64.2.1(a) For **Work** completed prior to the notice of termination, the **Contractor** shall be paid a pro rata portion of the lump sum bid amount, plus approved change orders, based upon the percent completion of the **Work**, as determined by the

Commissioner. For the purpose of determining the pro rata portion of the lump sum bid amount to which the **Contractor** is entitled, the bid breakdown submitted in accordance with Article 41 shall be considered, but shall not be dispositive. The **Commissioner's** determination hereunder shall be final, binding, and conclusive.

64.2.1(b) For non-cancelable material and equipment that is not capable of use except in the performance of this **Contract** and has been specifically fabricated for the sole purpose of this **Contract**, but not yet incorporated in the **Work**, the **Contractor** shall be paid the lesser of the following, less salvage value:

64.2.1(b)(i) The Direct Cost, as defined in Article 64.2.4; or

64.2.1(b)(ii) The fair and reasonable value, if less than Direct Cost, of such material and equipment, plus necessary and reasonable delivery costs.

64.2.1(b)(iii) In addition, the **Contractor** shall be paid five (5%) percent of the amount described in Article 64.2.1(b)(i) or Article 64.2.1(b)(ii), whichever applies.

64.2.1(c) Except as otherwise provided in Article 64.2.1(d), on all lump sum **Contracts**, the **Contractor** shall be paid the percentage indicated below applied to the difference between the total lump sum bid amount and the total of all payments made prior to the notice of termination plus all payments allowed pursuant to Articles 64.2.1(a) and 64.2.1(b):

64.2.1(c)(i) Five (5%) percent of the first five million ($5,000,000) dollars; and

64.2.1(c)(ii) Three (3%) percent of any amount between five million ($5,000,000) dollars and fifteen million ($15,000,000) dollars; plus

64.2.1(c)(iii) One (1%) percent of any amount over fifteen million ($15,000,000) dollars.

64.2.1(d) In the event the **City** terminates a lump sum **Contract** pursuant to this Article 64 within ninety (90) **Days** after registration of the **Contract** with the **Comptroller**, the **Contractor** shall be paid one (1%) percent of the difference between the lump sum bid amount and the total of all payments made pursuant to this Article 64.2.

64.2.2 Unit Price Contracts or Items: On all unit price **Contracts**, or on unit price items in a **Contract**, the **City** will pay the **Contractor** the sum of the amounts described in Articles 64.2.2(a) and 64.2.2(b), less all payments previously made pursuant to this **Contract**:

64.2.2(a) For all completed units, the unit price stated in the **Contract**, and

64.2.2(b) For units that have been ordered but are only partially completed, the **Contractor** will be paid:

64.2.2(b)(i) A pro rata portion of the unit price stated in the **Contract** based upon the percent completion of the unit and

64.2.2(b)(ii) For non-cancelable material and equipment, payment will be made pursuant to Article 64.2.1(b).

64.2.3 Time and Materials Contracts or Items Based on Time and Material Records: On all **Contracts** or items in a **Contract** where payment for the **Work** is based on time and material records, the **Contractor** shall be paid in accordance with Article 26, less all payments previously made pursuant to this **Contract**.

64.2.4 Direct Costs: Direct Costs as used in this Article 64.2 shall mean:

64.2.4(a) The actual purchase price of material and equipment, plus necessary and reasonable delivery costs,

64.2.4(b) The actual cost of labor involved in construction and installation at the **Site**, and

64.2.4(c) The actual cost of necessary bonds and insurance purchased pursuant to requirements of this **Contract** less any amounts that have been or should be refunded by the **Contractor's** sureties or insurance carriers.

64.2.4(d) Direct Costs shall not include overhead.

64.3 In no event shall any payments under this Article 64 exceed the **Contract** price for such items.

64.4 All payments pursuant to Article 64 shall be in the nature of liquidated damages and shall be accepted by the **Contractor** in full satisfaction of all claims against the **City**.

64.5 The **City** may deduct or set off against any sums due and payable pursuant to this Article 64, any deductions authorized by this **Contract** or by **Law** (including but not limited to liquidated damages) and any claims it may have against the **Contractor**. The **City's** exercise of the right to terminate the **Contract** pursuant to this Article 64 shall not impair or otherwise effect the **City's** right to assert any claims it may have against the **Contractor** in a plenary action.

64.6 Where the **Work** covered by the **Contract** has been substantially completed, as determined in writing by the **Commissioner**, termination of the **Work** shall be handled as an omission of **Work** pursuant to Articles 29 and 33, in which case a change order will be issued to reflect an appropriate reduction in the **Contract** sum, or if the amount is determined after final payment, such amount shall be paid by the **Contractor**.

ARTICLE 65. CHOICE OF LAW, CONSENT TO JURISDICTION AND VENUE

65.1 This **Contract** shall be deemed to be executed in the **City** regardless of the domicile of the **Contractor**, and shall be governed by and construed in accordance with the **Laws** of the State of New York and the **Laws** of the United States, where applicable.

65.2 The parties agree that any and all claims asserted against the **City** arising under this **Contract** or related thereto shall be heard and determined in the courts of the State of New York ("New York State Courts") located in the **City** and County of New York. To effect this **Contract** and intent, the **Contractor** agrees:

65.2.1 If the **City** initiates any action against the **Contractor** in Federal court or in a New York State Court, service of process may be made on the **Contractor** either in person, wherever such **Contractor** may be found, or by registered mail addressed to the **Contractor** at its address as set forth in this **Contract**, or to such other address as the **Contractor** may provide to the **City** in writing; and

65.2.2 With respect to any action between the **City** and the **Contractor** in a New York State Court, the **Contractor** hereby expressly waives and relinquishes any rights it might otherwise have:

65.2.2(a) To move to dismiss on grounds of forum non conveniens;

65.2.2(b) To remove to Federal Court; and

65.2.2(c) To move for a change of venue to a New York State Court outside New York County.

65.2.3 With respect to any action brought by the **City** against the **Contractor** in a Federal Court located in the **City**, the **Contractor** expressly waives and relinquishes any right it might otherwise have to move to transfer the action to a Federal Court outside the **City**.

65.2.4 If the **Contractor** commences any action against the **City** in a court located other than in the **City** and County of New York, upon request of the **City**, the **Contractor** shall either consent to a transfer of the action to a New York State Court of competent jurisdiction located in the **City** and County of New York or, if the Court where the action is initially brought will not or cannot transfer the action, the **Contractor** shall consent to dismiss such action without prejudice and may thereafter reinstate the action in a New York State Court of competent jurisdiction in New York County.

65.3 If any provision(s) of this Article 65 is held unenforceable for any reason, each and all other provision(s) shall nevertheless remain in full force and effect.

ARTICLE 66. PARTICIPATION IN AN INTERNATIONAL BOYCOTT

66.1 The **Contractor** agrees that neither the **Contractor** nor any substantially owned affiliated company is participating or shall participate in an international boycott in violation of the provisions of the Federal Export Administration Act of 1979, as amended, or the regulations of the United States Department of Commerce (Commerce Department) promulgated thereunder.

66.2 Upon the final determination by the Commerce Department or any other agency of the United States as to, or conviction of the **Contractor** or a substantially-owned affiliated company thereof for participation in an international boycott in violation of the provisions of the Export Administration Act of 1979, as amended, or the regulations promulgated thereunder, the **Comptroller** may, at his/her option, render forfeit and void this **Contract**.

66.3 The **Contractor** shall comply in all respects, with the provisions of Section 6-114 of the Administrative Code and the rules and regulations issued by the **Comptroller** thereunder.

ARTICLE 67. LOCALLY BASED ENTERPRISE PROGRAM

67.1 This **Contract** is subject to the requirements of Section 6-108.1 of the Administrative Code and regulations promulgated thereunder. No construction contract shall be awarded unless and until these requirements have been complied with in their entirety; however, compliance with this Article 67 is not required if the Agency sets Subcontractor Participation Goals for Minority- and Women-Owned Business Enterprises (M/WBEs).

67.2 Unless specifically waived by the **Commissioner** with the approval of the Division of Economic and Financial Opportunity of the **City** Department of Business Services, if any portion of the **Contract** is subcontracted, not less than ten (10%) percent of the total dollar amount of the **Contract** shall be awarded to locally based enterprises (LBEs); except that where less than ten (10%) percent of the total dollar amount of the **Contract** is subcontracted, such lesser percentage shall be so awarded.

67.3 The **Contractor** shall not require performance and payment bonds from LBE **Subcontractors**.

67.4 If the **Contractor** has indicated prior to award that no **Work** will be subcontracted, no **Work** shall be subcontracted without the prior approval of the **Commissioner**, which shall be granted only if the **Contractor** makes a good faith effort beginning at least six (6) weeks before the **Work** is to be performed to obtain LBE **Subcontractors** to perform the **Work**.

67.5 If the **Contractor** has not identified sufficient LBE **Subcontractors** prior to award, it shall sign a letter of compliance stating that it complies with Section 6-108.1 of the Administrative Code, recognizes that achieving the LBE requirement is a condition of its **Contract**, and shall submit documentation demonstrating its good faith efforts to obtain LBEs. After award, the **Contractor** shall begin to solicit LBE's to perform subcontracted **Work** at least six (6) weeks before the date such **Work** is to be performed and shall demonstrate that a good faith effort has been made to obtain LBEs on each subcontract until it meets the required percentage.

67.6 Failure of the **Contractor** to comply with the requirements of Section 6-108.1 of the Administrative Code and the regulations promulgated thereunder shall constitute a material breach of this **Contract**. Remedy for such breach may include the imposition of any or all of the following sanctions:

67.6.1 Reducing the **Contractor's** compensation by an amount equal to the dollar value of the percentage of the LBE subcontracting requirement not complied with;

67.6.2 Declaring the **Contractor** in default;

67.6.3 If the **Contractor** is an LBE, de-certifying and declaring the **Contractor** ineligible to participate in the LBE program for a period of up to three (3) years.

ARTICLE 68. ANTITRUST

68.1 The **Contractor** hereby assigns, sells, and transfers to the **City** all right, title, and interest in and to any claims and causes of action arising under the antitrust **Laws** of New York State or of the United States relating to the particular goods or services purchased or procured by the **City** under this **Contract**.

ARTICLE 69. MacBRIDE PRINCIPLES PROVISIONS

69.1 Notice To All Prospective **Contractors**:

69.1.1 Local Law No. 34 of 1991 became effective on September 10, 1991 and added Section 6-115.1 of the Administrative Code. The local **Law** provides for certain restrictions on **City Contracts** to express the opposition of the people of the **City** to employment discrimination practices in Northern Ireland to promote freedom of work-place opportunity.

69.1.2 Pursuant to Section 6-115.1, prospective **Contractors** for **Contracts** to provide goods or services involving an expenditure of an amount greater than ten thousand ($10,000.) dollars, or for construction involving an amount greater than fifteen thousand ($15,000.) dollars, are asked to sign a rider in which they covenant and represent, as a material condition of their **Contract**, that any business operations in Northern Ireland conducted by the **Contractor** and any individual or legal entity in which the **Contractor** holds a ten (10%) percent or greater ownership interest in the **Contractor** will be conducted in accordance with the MacBride Principles of nondiscrimination in employment.

69.1.3 Prospective **Contractors** are not required to agree to these conditions. However, in the case of **Contracts** let by competitive sealed bidding, whenever the lowest responsible bidder has not agreed to stipulate to the conditions set forth in this notice and another bidder who has agreed to stipulate to such conditions has submitted a bid within five (5%) percent of the lowest responsible bid for a **Contract** to supply goods, services or contraction of comparable quality, the **Agency** shall refer such bids to the Mayor, the Speaker or other officials, as appropriate, who may determine, in accordance with applicable **Law**, that it is in the best interest of the **City** that the **Contract** be awarded to other than the lowest responsible pursuant to Section 313(b)(2) of the **City** Charter.

69.1.4 In the case of **Contracts** let by other than competitive sealed bidding, if a prospective **Contractor** does not agree to these conditions, no **Agency**, elected official or the **City** Council shall award the **Contract** to that bidder unless the **Agency** seeking to use the goods, services or construction certifies in writing that the **Contract** is necessary for the **Agency** to perform its functions and there is no other responsible **Contractor** who will supply goods, services or construction of comparable quality at a comparable price.

69.2 In accordance with Section 6-115.1 of the Administrative Code, the **Contractor** stipulates that such **Contractor** and any individual or legal entity in which the **Contractor** holds a ten (10%) percent or greater ownership interest in the **Contractor** either:

69.2.1 Have no business operations in Northern Ireland, or

69.2.2 Shall take lawful steps in good faith to conduct any business operations they have in Northern Ireland in accordance with the MacBride Principles, and shall permit independent monitoring of their compliance with such principles.

69.3 For purposes of this Article, the following terms shall have the following meanings:

69.3.1 "MacBride Principles" shall mean those principles relating to nondiscrimination in employment and freedom of work-place opportunity which require employers doing business in Northern Ireland to:

69.3.1(a) increase the representation of individuals from under-represented religious groups in the workforce, including managerial, supervisory, administrative, clerical and technical jobs;

69.3.1(b) take steps to promote adequate security for the protection of employees from under-represented religious groups both at the work-place and while traveling to and from **Work**;

69.3.1(c) ban provocative religious or political emblems from the workplace;

69.3.1(d) publicly advertise all job openings and make special recruitment efforts to attract applicants from under-represented religious groups;

69.3.1(e) establish layoff, recall, and termination procedures which do not in practice favor a particular religious group;

69.3.1(f) abolish all job reservations, apprenticeship restrictions and different employment criteria which discriminate on the basis of religion;

69.3.1(g) develop training programs that will prepare substantial numbers of current employees from under-represented religious groups for skilled jobs, including the expansion of existing programs and the creation of new programs to train, upgrade, and improve the skills of workers from under-represented religious groups;

69.3.1(h) establish procedures to asses, identify, and actively recruit employees from under-represented religious groups with potential for further advancement; and

69.3.1(i) appoint a senior management staff member to oversee affirmative action efforts and develop a timetable to ensure their full implementation.

69.4 The **Contractor** agrees that the covenants and representations in Article 69.2 are material conditions to this **Contract**. In the event the **Agency** receives information that the **Contractor** who made the stipulation required by this Article 69 is in violation thereof, the **Agency** shall review such information and give the **Contractor** an opportunity to respond. If the **Agency** finds that a violation has occurred, the **Agency** shall have the right to declare the **Contractor** in default in default and/or terminate this **Contract** for cause and procure supplies, services or **Work** from another source in the manner the **Agency** deems proper. In the event of such termination, the **Contractor** shall pay to the **Agency**, or the **Agency** in its sole discretion may withhold from any amounts otherwise payable to the **Contractor**, the difference between the **Contract** price for the uncompleted portion of this **Contract** and the cost to the **Agency** of completing performance of this **Contract** either itself or by engaging another **Contractor** or **Contractors**. In the case of a requirement **Contract**, the **Contractor** shall be liable for such difference in price for the entire amount of supplies required by the **Agency** for the uncompleted term of **Contractor's Contract**. In the case of a construction **Contract**, the **Agency** shall also have the right to hold the **Contractor** in partial or total default in accordance with the default provisions of this **Contract**, and/or may seek debarment or suspension of the **Contractor**. The rights and remedies of the **Agency** hereunder shall be in addition to, and not in lieu of, any rights and remedies the **Agency** has pursuant to this **Contract** or by operation of **Law**.

ARTICLE 70. ELECTRONIC FILING/NYC DEVELOPMENT HUB

70.1 The **Contractor** shall electronically file all alteration type-2 and alteration type-3 applications via the New York City Development Hub Web site, except applications for the following types of minor alterations: enlargements, curb cuts, legalizations, fire alarms, builders pavement plans, and jobs filed on Landmark Preservation Commission calendared properties. All such filings must be professionally certified. Information about electronic filing via the New York City Development Hub is available on the **City** Department of Buildings Web site at www.nyc.gov/buildings.

ARTICLE 71. PROHIBITION OF TROPICAL HARDWOODS

71.1 Tropical hardwoods, as defined in Section 165 of the New York State Finance Law (Finance Law), shall not be utilized in the performance of this **Contract** except as expressly permitted by Section 165 of the Finance Law.

ARTICLE 72. CONFLICTS OF INTEREST

72.1 Section 2604 of the **City** Charter and other related provisions of the **City** Charter, the Administrative Code, and the Penal Law are applicable under the terms of this **Contract** in relation to conflicts of interest and shall be extended to **Subcontractors** authorized to perform **Work**, labor and services pursuant to this **Contract** and further, it shall be the duty and responsibility of the **Contractor** to so inform its respective **Subcontractors**. Notice is hereby given that, under certain circumstances, penalties may be invoked against the donor as well as the recipient of any form of valuable gift.

ARTICLE 73. MERGER CLAUSE

73.1 The written **Contract** herein, contains all the terms and conditions agreed upon by the parties hereto, and no other agreement, oral or otherwise, regarding the subject matter of this **Contract** shall be deemed to exist or to bind any of the parties hereto, or to vary any of the terms contained herein.

ARTICLE 74. STATEMENT OF WORK

74.1 The **Contractor** shall furnish all labor and materials and perform all **Work** in strict accordance with the **Specifications** and **Addenda** thereto, numbered as shown in Schedule A.

ARTICLE 75. COMPENSATION TO BE PAID TO CONTRACTOR

75.1 The **City** will pay and the **Contractor** will accept in full consideration for the performance of the **Contract**, subject to additions and deductions as provided herein, the total sum shown in Schedule A, this said sum being the amount at which the **Contract** was awarded to the **Contractor** at a public letting thereof, based upon the **Contractor's** bid for the **Contract**.

ARTICLE 76. ELECTRONIC FUNDS TRANSFER

76.1 In accordance with Section 6-107.1 of the Administrative Code, the **Contractor** agrees to accept payments under this **Contract** from the **City** by electronic funds transfer (EFT). An EFT is any

transfer of funds, other than a transaction originated by check, draft or similar paper instrument, which is initiated through an electronic terminal, telephonic instrument or computer or magnetic tape so as to order, instruct or authorize a financial institution to debit or credit an account. Prior to the first payment made under this **Contract**, the **Contractor** shall designate one financial institution or other authorized payment agent and shall complete the attached "EFT Vendor Payment Enrollment Form" in order to provide the Commissioner of the **City** Department of Finance with information necessary for the **Contractor** to receive electronic funds transfer payments through a designated financial institution or authorized payment agent. The crediting of the amount of a payment to the appropriate account on the books of a financial institution or other authorized payment agent designated by the **Contractor** shall constitute full satisfaction by the **City** for the amount of the payment under this **Contract**. The account information supplied by the **Contractor** to facilitate the electronic funds transfer shall remain confidential to the fullest extent provided by **Law**.

76.2 The **Commissioner** may waive the application of the requirements of this Article 76 to payments on contracts entered into pursuant to Section 315 of the **City** Charter. In addition, the Commissioner of the Department of Finance and the Comptroller may jointly issue standards pursuant to which the **Agency** may waive the requirements of this Article 76 for payments in the following circumstances: (i) for individuals or classes of individuals for whom compliance imposes a hardship; (ii) for classifications or types of checks; or (iii) in other circumstances as may be necessary in the interest of the **City**.

ARTICLE 77. RECORDS RETENTION

77.1 The **Contractor** agrees to retain all books, records, and other documents relevant to this **Contract** for six years after the final payment or termination of this **Contract**, whichever is later. **City**, state, and federal auditors and any other persons duly authorized by the **City** shall have full access to and the right to examine any such books, records, and other documents during the retention period.

ARTICLE 78. EXAMINATION AND VIEWING OF SITE, CONSIDERATION OF OTHER SOURCES OF INFORMATION AND CHANGED SITE CONDITIONS

78.1 Pre-Bidding (Investigation) Viewing of Site – Bidders must carefully view and examine the **Site** of the proposed **Work**, as well as its adjacent area, and seek other usual sources of information, for they will be conclusively presumed to have full knowledge of any and all conditions and hazards on, about or above the **Site** relating to or affecting in any way the performance of the **Work** to be done under the **Contract** that were or should have been known by a reasonably prudent bidder. To arrange a date for visiting the **Site**, bidders are to contact the **Agency** contact person specified in the bid documents.

78.2 Should the **Contractor** encounter during the progress of the Work site conditions or environmental hazards at the **Site** materially differing from any shown on the **Contract Drawings** or indicated in the **Specifications** or such conditions or environmental hazards as could not reasonably have been anticipated by the **Contractor**, which conditions or hazards will materially affect the cost of the **Work** to be done under the **Contract**, the attention of the **Commissioner** must be called immediately to such conditions or hazards before they are disturbed. The **Commissioner** shall thereupon promptly investigate the conditions or hazards. If the **Commissioner** finds that they do so materially differ, and that they could not have been reasonably anticipated by the **Contractor**, the **Contract** may be modified with the **Commissioner**'s written approval.

ARTICLE 79. PARTICIPATION BY MINORITY-OWNED AND WOMEN-OWNED BUSINESS ENTERPRISES IN CITY PROCUREMENT

NOTICE TO ALL PROSPECTIVE CONTRACTORS

ARTICLE I. M/WBE PROGRAM

Local Law No. 129 of 2005 added and Local Law 1 of 2013 amended Section 6-129 of the Administrative Code of the City of New York (hereinafter "Section 6-129"). Section 6-129 establishes the program for participation in City procurement ("M/WBE Program") by minority- owned business enterprises ("MBEs") and women-owned business enterprises ("WBEs"), certified in accordance with Section 1304 of the New York City Charter. As stated in Section 6-129, the intent of the program is to address the impact of discrimination on the City's procurement process, and to promote the public interest in avoiding fraud and favoritism in the procurement process, increasing competition for City business, and lowering contract costs. The contract provisions contained herein are pursuant to Section 6-129, and the rules of the Department of Small Business Services ("DSBS") promulgated thereunder.

If this Contract is subject to the M/WBE Program established by Section 6-129, the specific requirements of MBE and/or WBE participation for this Contract are set forth in Schedule B of the Contract (entitled the "M/WBE Utilization Plan"), and are detailed below. The Contractor must comply with all applicable MBE and WBE requirements for this Contract.

All provisions of Section 6-129 are hereby incorporated in the Contract by reference and all terms used herein that are not defined herein shall have the meanings given such terms in Section 6-129. Article I, Part A, below, sets forth provisions related to the participation goals for construction, standard and professional services contracts. Article I, Part B, below, sets forth miscellaneous provisions related to the M/WBE Program.

PART A

PARTICIPATION GOALS FOR CONSTRUCTION, STANDARD AND PROFESSIONAL SERVICES CONTRACTS OR TASK ORDERS

1. The **MBE and/or WBE Participation Goals** established for this Contract or Task Orders issued pursuant to this Contract, ("**Participation Goals**"), as applicable, are set forth on Schedule B, Part I to this Contract (see Page 1, line 1 Total Participation Goals) or will be set forth on Schedule B, Part I to Task Orders issued pursuant to this Contract, as applicable.

The **Participation Goals** represent a percentage of the total dollar value of the Contract or Task Order, as applicable, that may be achieved by awarding subcontracts to firms certified with New York City Department of Small Business Services as MBEs and/or WBEs, and/or by crediting the participation of prime contractors and/or qualified joint ventures as provided in Section 3 below, unless the goals have been waived or modified by Agency in accordance with Section 6-129 and Part A, Sections 10 and 11 below, respectively.

2. If **Participation Goals** have been established for this Contract or Task Orders issued pursuant to this Contract, Contractor agrees or shall agree as a material term of the Contract that Contractor shall be subject to the **Participation Goals**, unless the goals are waived or modified by Agency in accordance with Section 6-129 and Part A, Sections 10 and 11 below, respectively.

3. If **Participation Goals** have been established for this Contract or Task Order issued pursuant to this Contract, a Contractor that is an MBE and/or WBE shall be permitted to count its own participation toward fulfillment of the relevant **Participation Goal**, provided that in accordance with Section 6-129 the value of Contractor's participation shall be determined by subtracting from the total value of the Contract or Task Order, as applicable, any amounts that the Contractor pays to direct subcontractors (as defined in Section 6-129(c)(13)), and provided further that a Contractor that is certified as both an MBE and a WBE may count its own participation either toward the goal for MBEs or the goal for WBEs, but not both.

A Contractor that is a qualified joint venture (as defined in Section 6-129(c)(30)) shall be permitted to count a percentage of its own participation toward fulfillment of the relevant **Participation Goal**. In accordance with Section 6-129, the value of Contractor's participation shall be determined by subtracting from the total value of the Contract or Task Order, as applicable, any amounts that Contractor pays to direct subcontractors, and then multiplying the remainder by the percentage to be applied to total profit to determine the amount to which an MBE or WBE is entitled pursuant to the joint venture agreement, provided that where a participant in a joint venture is certified as both an MBE and a WBE, such amount shall be counted either toward the goal for MBEs or the goal for WBEs, but not both.

4. A. If **Participation Goals** have been established for this Contract, a prospective contractor shall be required to submit with its bid or proposal, as applicable, a completed Schedule B, M/WBE Utilization Plan, Part II (see Pages 2-4) indicating: (a) whether the contractor is an MBE or WBE, or qualified joint venture; (b) the percentage of work it intends to award to direct subcontractors; and (c) in cases where the contractor intends to award direct subcontracts, a description of the type and dollar value of work designated for participation by MBEs and/or WBEs, and the time frames in which such work is scheduled to begin and end. In the event that this M/WBE Utilization Plan indicates that the bidder or proposer, as applicable, does not intend to meet the **Participation Goals**, the bid or proposal, as applicable, shall be deemed non-responsive, unless Agency has granted the bidder or proposer, as applicable, a pre- award waiver of the Participation Goals in accordance with Section 6-129 and Part A, Section 10 below.

B. (i) If this Contract is for a master services agreement or other requirements type contract that will result in the issuance of Task Orders that will be individually registered ("Master Services Agreement") and is subject to M/WBE **Participation Goals**, a prospective contractor shall be required to submit with its bid or proposal, as applicable, a completed Schedule B, M/WBE Participation Requirements for Master Services Agreements That Will Require Individually Registered Task Orders, Part II (page 2) indicating the prospective contractor's certification and required affirmations to make all reasonable good faith efforts to meet participation goals established on each individual Task Order issued pursuant to this Contract, or if a partial waiver is obtained or such goals are modified by the Agency, to meet the modified **Participation Goals** by soliciting and obtaining the participation of certified MBE and/or WBE firms. In the event that the Schedule B indicates that the bidder or proposer, as applicable, does not intend to meet the **Participation Goals** that may be established on Task Orders issued pursuant to this Contract, the bid or proposal, as applicable, shall be deemed nonresponsive.

(ii) **Participation Goals** on a Master Services Agreement will be established for individual Task Orders issued after the Master Services Agreement is awarded. If **Participation Goals** have been established on a Task Order, a contractor shall be required to submit a Schedule B – M/WBE Utilization Plan For Independently Registered Task Orders That Are Issued Pursuant to Master Services Agreements, Part II (see Pages 2-4) indicating: (a) whether the contractor is an MBE or WBE, or qualified joint venture; (b) the percentage of work it intends to award to direct subcontractors; and (c) in cases where the contractor intends to award direct subcontracts, a description of the type and dollar value of work designated for participation by MBEs and/or WBEs, and the time frames in which such work is scheduled to begin and end. The contractor must engage in good faith efforts to meet the **Participation Goals** as established for the Task Order unless Agency has granted the contractor a pre-award waiver of the Participation Goals in accordance with Section 6-129 and Part A, Section 10 below.

C. THE BIDDER/PROPOSER MUST COMPLETE THE SCHEDULE B INCLUDED HEREIN (SCHEDULE B, PART II). A SCHEDULE B SUBMITTED BY THE BIDDER/PROPOSER WHICH DOES NOT INCLUDE THE VENDOR CERTIFICATION AND REQUIRED AFFIRMATIONS (SEE SECTION V OF PART II) WILL BE DEEMED TO BE NON-RESPONSIVE, UNLESS A FULL WAIVER OF THE PARTICIPATION GOALS IS GRANTED (SCHEDULE B, PART III). IN THE EVENT THAT THE CITY DETERMINES THAT THE BIDDER/PROPOSER HAS SUBMITTED A SCHEDULE B WHERE THE VENDOR CERTIFICATION AND REQUIRED AFFIRMATIONS ARE COMPLETED BUT OTHER ASPECTS OF THE SCHEDULE B ARE NOT COMPLETE, OR CONTAIN A COPY OR COMPUTATION ERROR THAT IS AT ODDS WITH THE VENDOR CERTIFICATION AND AFFIRMATIONS, THE BIDDER/PROPOSER WILL BE NOTIFIED BY THE AGENCY AND WILL BE GIVEN FOUR (4) CALENDAR DAYS FROM RECEIPT OF NOTIFICATION TO CURE THE SPECIFIED DEFICIENCIES AND RETURN A COMPLETED SCHEDULE B TO THE AGENCY. FAILURE TO DO SO WILL RESULT IN A DETERMINATION THAT THE BID/PROPOSAL IS NON-RESPONSIVE. RECEIPT OF NOTIFICATION IS DEFINED AS THE DATE NOTICE IS E-MAILED OR FAXED (IF THE BIDDER/PROPOSER HAS PROVIDED AN E-MAIL ADDRESS OR FAX NUMBER), OR NO LATER THAN FIVE (5) CALENDAR DAYS FROM THE DATE OF MAILING OR UPON DELIVERY, IF DELIVERED.

5. Where an **M/WBE** Utilization Plan has been submitted, the Contractor shall, within 30 days of issuance by Agency of a notice to proceed, submit a list of proposed persons or entities to which it intends to award subcontracts within the subsequent 12 months. In the case of multiyear contracts, such list shall also be submitted every year thereafter. The Agency may also require the Contractor to report periodically about the contracts awarded by its direct subcontractors to indirect subcontractors (as defined in Section 6-129(c)(22)). **PLEASE NOTE: If this Contract is a public works project subject to GML §101(5) (i.e., a contract valued at or below $3M for projects in New York City) or if the Contract is subject to a project labor agreement in accordance with Labor Law §222, and the bidder is required to identify at the time of bid submission its intended subcontractors for the Wicks trades (plumbing and gas fitting; steam heating, hot water heating, ventilating and air conditioning (HVAC); and electric wiring), the Contractor must identify all those to which it intends to award construction subcontracts for any portion of the Wicks trade work at the time of bid submission, regardless of what point in the life of the contract such subcontracts will occur. In identifying intended subcontractors in the bid submission, bidders may satisfy any Participation Goals established for this Contract by proposing one or more subcontractors that are MBEs and/or WBEs for any portion of the Wicks trade work.** In the event that the Contractor's selection of a subcontractor is disapproved, the Contractor shall have a reasonable time to propose alternate subcontractors.

6. MBE and WBE firms must be certified by DSBS in order for the Contractor to credit such firms' participation toward the attainment of the **Participation Goals**. Such certification must occur prior to the

firms' commencement of work. A list of MBE and WBE firms may be obtained from the DSBS website at www.nyc.gov/buycertified, by emailing DSBS at buyer@sbs.nyc.gov, by calling (212) 513-6356, or by visiting or writing DSBS at 110 William St., New York, New York, 10038, 7th floor. Eligible firms that have not yet been certified may contact DSBS in order to seek certification by visiting www.nyc.gov/getcertified, emailing MWBE@sbs.nyc.gov, or calling the DSBS certification helpline at (212) 513-6311. A firm that is certified as both an MBE and a WBE may be counted either toward the goal for MBEs or the goal for WBEs, but not both. No credit shall be given for participation by a graduate MBE or graduate WBE, as defined in Section 6-129(c)(20).

7. Where an **M/WBE** Utilization Plan has been submitted, the Contractor shall, with each voucher for payment, and/or periodically as Agency may require, submit statements, certified under penalty of perjury, which shall include, but not be limited to,: the total amount the Contractor paid to its direct subcontractors, and, where applicable pursuant to Section 6-129(j), the total amount direct subcontractors paid to indirect subcontractors; the names, addresses and contact numbers of each MBE or WBE hired as a subcontractor by the Contractor, and, where applicable, hired by any of the Contractor's direct subcontractors; and the dates and amounts paid to each MBE or WBE. The Contractor shall also submit, along with its voucher for final payment: the total amount it paid to subcontractors, and, where applicable pursuant to Section 6-129(j), the total amount its direct subcontractors paid directly to their indirect subcontractors; and a final list, certified under penalty of perjury, which shall include the name, address and contact information of each subcontractor that is an MBE or WBE, the work performed by, and the dates and amounts paid to each.

8. If payments made to, or work performed by, MBEs or WBEs are less than the amount specified in the Contractor's **M/WBE** Utilization Plan, Agency shall take appropriate action, in accordance with Section 6-129 and Article II below, unless the Contractor has obtained a modification of its **M/WBE** Utilization Plan in accordance with Section 6-129 and Part A, Section 11 below.

9. Where an **M/WBE** Utilization Plan has been submitted, and the Contractor requests a change order the value of which exceeds the greater of 10 percent of the Contract or Task Order, as applicable, or $500,000, Agency shall review the scope of work for the Contract or Task Order, as applicable, and the scale and types of work involved in the change order, and determine whether the **Participation Goals** should be modified.

10. Pre-award waiver of the **Participation Goals**. (a) A bidder or proposer, or contractor with respect to a Task Order, may seek a pre-award full or partial waiver of the **Participation Goals** in accordance with Section 6-129, which requests that Agency change one or more **Participation Goals** on the grounds that the **Participation Goals** are unreasonable in light of the availability of certified firms to perform the services required, or by demonstrating that it has legitimate business reasons for proposing a lower level of subcontracting in its M/WBE Utilization Plan.

(b) To apply for a full or partial waiver of the **Participation Goals**, a bidder, proposer, or contractor, as applicable, must complete Part III (Page 5) of Schedule B and submit such request no later than seven (7) calendar days prior to the date and time the bids, proposals, or Task Orders are due, in writing to the Agency by email at poped@ddc.nyc.gov or via facsimile at (718) 391-1886. Bidders, proposers, or contractors, as applicable, who have submitted requests will receive an Agency response by no later than two (2) calendar days prior to the due date for bids, proposals, or Task Orders; provided, however, that if that date would fall on a weekend or holiday, an Agency response will be provided by close-of-business on the business day before such weekend or holiday date.

(c) If the Agency determines that the **Participation Goals** are unreasonable in light of the availability of certified firms to perform the services required, it shall revise the solicitation and extend the deadline for bids and proposals, or revise the Task Order, as applicable.

(d) Agency may grant a full or partial waiver of the **Participation Goals** to a bidder, proposer or contractor, as applicable, who demonstrates—before submission of the bid, proposal or Task Order, as applicable—that it has legitimate business reasons for proposing the level of subcontracting in its **M/WBE** Utilization Plan. In making its determination, Agency shall consider factors that shall include, but not be limited to, whether the bidder, proposer or contractor, as applicable, has the capacity and the bona fide intention to perform the Contract without any subcontracting, or to perform the Contract without awarding the amount of subcontracts represented by the **Participation Goals.** In making such determination, Agency may consider whether the **M/WBE** Utilization Plan is consistent with past subcontracting practices of the bidder, proposer or contractor, as applicable, whether the bidder, proposer or contractor, as applicable, has made efforts to form a joint venture with a certified firm, and whether the bidder, proposer, or contractor, as applicable, has made good faith efforts to identify other portions of the Contract that it intends to subcontract.

11. Modification of **M/WBE** Utilization Plan. (a) A Contractor may request a modification of its **M/WBE** Utilization Plan after award of this Contract. **PLEASE NOTE: If this Contract is a public works project subject to GML §101(5) (i.e., a contract valued at or below $3M for projects in New York City) or if the Contract is subject to a project labor agreement in accordance with Labor Law §222, and the bidder is required to identify at the time of bid submission its intended subcontractors for the Wicks trades (plumbing and gas fitting; steam heating, hot water heating, ventilating and air conditioning (HVAC); and electric wiring), the Contractor may request a Modification of its M/WBE Utilization Plan as part of its bid submission.** The Agency may grant a request for Modification of a Contractor's **M/WBE** Utilization Plan if it determines that the Contractor has established, with appropriate documentary and other evidence, that it made reasonable, good faith efforts to meet the **Participation Goals.** In making such determination, Agency shall consider evidence of the following efforts, as applicable, along with any other relevant factors:

(i) The Contractor advertised opportunities to participate in the Contract, where appropriate, in general circulation media, trade and professional association publications and small business media, and publications of minority and women's business organizations;
(ii) The Contractor provided notice of specific opportunities to participate in the Contract, in a timely manner, to minority and women's business organizations;
(iii) The Contractor sent written notices, by certified mail or facsimile, in a timely manner, to advise MBEs or WBEs that their interest in the Contract was solicited;
(iv) The Contractor made efforts to identify portions of the work that could be substituted for portions originally designated for participation by MBEs and/or WBEs in the M/WBE Utilization Plan, and for which the Contractor claims an inability to retain MBEs or WBEs;
(v) The Contractor held meetings with MBEs and/or WBEs prior to the date their bids or proposals were due, for the purpose of explaining in detail the scope and requirements of the work for which their bids or proposals were solicited;
(vi) The Contractor made efforts to negotiate with MBEs and/or WBEs as relevant to perform specific subcontracts, or act as suppliers or service providers;
(vii) Timely written requests for assistance made by the Contractor to Agency's M/WBE liaison officer and to DSBS;
(viii) Description of how recommendations made by DSBS and Agency were acted upon and an explanation of why action upon such recommendations did not lead to the desired level of participation of MBEs and/or WBEs.

Agency's M/WBE officer shall provide written notice to the Contractor of the determination.

(b) The Agency may modify the **Participation Goals** when the scope of the work has been changed by the Agency in a manner that affects the scale and types of work that the Contractor indicated in its **M/WBE** Utilization Plan would be awarded to subcontractors.

12. If this Contract is for an indefinite quantity of construction, standard or professional services or is a requirements type contract and the Contractor has submitted an **M/WBE** Utilization Plan and has committed to subcontract work to MBEs and/or WBEs in order to meet the **Participation Goals**, the Contractor will not be deemed in violation of the M/WBE Program requirements for this Contract with regard to any work which was intended to be subcontracted to an MBE and/or WBE to the extent that the Agency has determined that such work is not needed.

13. If **Participation Goals** have been established for this Contract or a Task Order issued pursuant to this Contract, at least once annually during the term of the Contract or Task Order, as applicable, Agency shall review the Contractor's progress toward attainment of its M/WBE Utilization Plan, including but not limited to, by reviewing the percentage of work the Contractor has actually awarded to MBE and/or WBE subcontractors and the payments the Contractor made to such subcontractors.

14. If **Participation Goals** have been established for this Contract or a Task Order issued pursuant to this Contract, Agency shall evaluate and assess the Contractor's performance in meeting those goals, and such evaluation and assessment shall become part of the Contractor's overall contract performance evaluation.

PART B: MISCELLANEOUS

1. The Contractor shall take notice that, if this solicitation requires the establishment of an **M/WBE** Utilization Plan, the resulting contract may be audited by DSBS to determine compliance with Section 6-129. See §6-129(e)(10). Furthermore, such resulting contract may also be examined by the City's Comptroller to assess compliance with the **M/WBE** Utilization Plan.

2. Pursuant to DSBS rules, construction contracts that include a requirement for an **M/WBE** Utilization Plan shall not be subject to the law governing Locally Based Enterprises set forth in Section 6-108.1 of the Administrative Code of the City of New York.

3. DSBS is available to assist contractors and potential contractors in determining the availability of MBEs and/or WBEs to participate as subcontractors, and in identifying opportunities that are appropriate for participation by MBEs and/or WBEs in contracts.

4. Prospective contractors are encouraged to enter into qualified joint venture agreements with MBEs and/or WBEs as defined by Section 6-129(c)(30).

5. By submitting a bid or proposal the Contractor hereby acknowledges its understanding of the M/WBE Program requirements set forth herein and the pertinent provisions of Section 6-129, and any rules promulgated thereunder, and if awarded this Contract, the Contractor hereby agrees to comply with the M/WBE Program requirements of this Contract and pertinent provisions of Section 6-129, and any rules promulgated thereunder, all of which shall be deemed to be material terms of this Contract. The Contractor hereby agrees to make all reasonable, good faith efforts to solicit and obtain the participation of MBEs and/or WBEs to meet the required **Participation Goals**.

ARTICLE II. ENFORCEMENT

1. If Agency determines that a bidder or proposer, as applicable, has, in relation to this procurement, violated Section 6-129 or the DSBS rules promulgated pursuant to Section 6-129, Agency may disqualify such bidder or proposer, as applicable, from competing for this Contract and the Agency may revoke such bidder's or proposer's prequalification status, if applicable.

2. Whenever Agency believes that the Contractor or a subcontractor is not in compliance with Section 6-129 or the DSBS rules promulgated pursuant to Section 6-129, or any provision of this Contract that implements Section 6-129, including, but not limited to any **M/WBE** Utilization Plan, Agency shall send a written notice to the Contractor describing the alleged noncompliance and offering the Contractor an opportunity to be heard. Agency shall then conduct an investigation to determine whether such Contractor or subcontractor is in compliance.

3. In the event that the Contractor has been found to have violated Section 6-129, the DSBS rules promulgated pursuant to Section 6-129, or any provision of this Contract that implements Section 6-129, including, but not limited to, any **M/WBE** Utilization Plan, Agency may determine that one of the following actions should be taken:

(a) entering into an agreement with the Contractor allowing the Contractor to cure the violation;
(b) revoking the Contractor's pre-qualification to bid or make proposals for future contracts;
(c) making a finding that the Contractor is in default of the Contract;
(d) terminating the Contract;
(e) declaring the Contractor to be in breach of Contract;
(f) withholding payment or reimbursement;
(g) determining not to renew the Contract;
(h) assessing actual and consequential damages;
(i) assessing liquidated damages or reducing fees, provided that liquidated damages may be based on amounts representing costs of delays in carrying out the purposes of the M/WBE Program, or in meeting the purposes of the Contract, the costs of meeting utilization goals through additional procurements, the administrative costs of investigation and enforcement, or other factors set forth in the Contract;
(j) exercising rights under the Contract to procure goods, services or construction from another contractor and charge the cost of such contract to the Contractor that has been found to be in noncompliance; or
(k) taking any other appropriate remedy.

4. If an **M/WBE** Utilization Plan has been submitted, and pursuant to this Article II, Section 3, the Contractor has been found to have failed to fulfill its **Participation Goals** contained in its **M/WBE** Utilization Plan or the **Participation Goals** as modified by Agency pursuant to Article I, Part A, Section 11, Agency may assess liquidated damages in the amount of ten percent (10%) of the difference between the dollar amount of work required to be awarded to MBE and/or WBE firms to meet the **Participation Goals** and the dollar amount the Contractor actually awarded and paid, and/or credited, to MBE and/or WBE firms. In view of the difficulty of accurately ascertaining the loss which the City will suffer by reason of Contractor's failure to meet the **Participation Goals**, the foregoing amount is hereby fixed and agreed as the liquidated damages that the City will suffer by reason of such failure, and not as a penalty. Agency may deduct and retain out of any monies which may become due under this Contract the amount of any such liquidated damages; and in case the amount which may become due under this Contract shall be less than the amount of liquidated damages suffered by the City, the Contractor shall be liable to pay the difference.

5. Whenever Agency has reason to believe that an MBE and/or WBE is not qualified for certification, or is participating in a contract in a manner that does not serve a commercially useful function (as defined in Section 6-129(c)(8)), or has violated any provision of Section 6- 129, Agency shall notify the Commissioner of DSBS who shall determine whether the certification of such business enterprise should be revoked.

6. Statements made in any instrument submitted to Agency pursuant to Section 6-129 shall be submitted under penalty of perjury and any false or misleading statement or omission shall be grounds for the application of any applicable criminal and/or civil penalties for perjury. The making of a false or fraudulent statement by an MBE and/or WBE in any instrument submitted pursuant to Section 6-129 shall, in addition, be grounds for revocation of its certification.

7. The Contractor's record in implementing its **M/WBE** Utilization Plan shall be a factor in the evaluation of its performance. Whenever Agency determines that a Contractor's compliance with an **M/WBE** Utilization Plan has been unsatisfactory, Agency shall, after consultation with the City Chief Procurement Officer, file an advice of caution form for inclusion in VENDEX as caution data.

IN WITNESS WHEREOF, the Deputy Commissioner, on behalf of the City of New York, and the Contractor, have executed this agreement in quadruplicate, two parts of which are to remain with the Commissioner, another to be filed with the Comptroller of the City, and the fourth to be delivered to the Contractor.

THE CITY OF NEW YORK

By: _____
Deputy Commissioner

CONTRACTOR: PERFETTO ENTERPRISES CO., INC.

By: _____
(Member of Firm or Officer of Corporation)

Title: PRES

(Where Contractor is a Corporation, add):
Attest:

_____
Secretary

(Seal)

_____

ACKNOWLEDGEMENT OF PRINCIPAL, IF A CORPORATION

State of New York County of Queens ss:

On this 12 day of DEC, 2017, before me personally came CLAUDIO PERFETTO to me known who, being by me duly sworn did depose and say that he resides at 134 CHAPIN AV STATEN ISLAND that he is the PRS OF PERFETTO FLY of the corporation described in and which executed the foregoing instrument; that he knows the seal of said corporation; that one of the seals affixed to said instrument is such seal; that it was so affixed by order of the directors of said corporation, and that he signed his name thereto by like order.

BRENDA A. BARREIRO
Notary Public, State of New York
No. 01BA6351073
Qualified in Kings County
Commission Expires Nov. 28, 2020

Notary Public or Commissioner of Deeds

ACKNOWLEDGEMENT OF PRINCIPAL, IF A PARTNERSHIP

State of _____ County of _____ ss:

On this _____ day of _____, _____, before me personally appeared _____ to me known, and known to me to be one of the members of the firm of _____ _____ described in and who executed the foregoing instrument; and he acknowledged to me that he executed the same as and for the act and deed of said firm.

_____
Notary Public or Commissioner of Deeds

ACKNOWLEDGEMENT OF PRINCIPAL, IF AN INDIVIDUAL

State of _____ County of _____ ss:

On this _____ day of _____, _____, before me personally appeared _____ to me known, and known to me to be the person described in and who executed the foregoing instrument; and acknowledged that he executed the same.

_____
Notary Public or Commissioner of Deeds

ACKNOWLEDGEMENT BY COMMISSIONER

State of New York County of Queens ss:

On this 12th day of Dec, 2017 before me personally came Eric MacFarlane to me known, and known to be the Deputy Commissioner of the Department of Design and Construction of The City of New York, the person described as such in and who as such executed the foregoing instrument and acknowledged to me that he executed the same as Deputy Commissioner for the purposes therein mentioned.

Notary Public or Commissioner of Deeds

Frances Mirtale
Notary Public, State of New York
No. 43-4748045
Qualified in Richmond County
Commission Expires December 31, 2017

AUTHORITY

MAYOR'S CERTIFICATE NO. CBX DATED
BUDGET DIRECTOR'S CERTIFICATE NO. DATED

APPROPRIATION
COMMISSIONER'S CERTIFICATE

In conformity with the provisions of Section 6-101 of the Administrative Code of the City of New York, it is hereby certified that the estimated cost of the work, materials and supplies required by the within Contract, amounting to

Seven million, two hundred thousand dollars.

Dollars ($ 7,200,000.00)

is chargeable to the fund of the Department of Design and Construction entitled Code

Department of Design and Construction

I hereby certify that the specifications contained herein comply with the terms and conditions of the BUDGET.

Deputy Commissioner

COMPTROLLER'S CERTIFICATE

The City of New York

Pursuant to the provisions of Section 6-101 of the Administrative Code of the City of New York, I hereby certify that there remains unapplied and unexpended a balance of the above mentioned fund applicable to this Contract sufficient to pay the estimated expense of executing the same viz:

$

Comptroller

MAYOR'S CERTIFICATE OR CERTIFICATE OF THE DIRECTOR OF THE BUDGET

Performance Bond #1 (Pages 100 to 103): Use if the total contract price is $5 Million Or Less. Performance Bond #1 has been approved by the U.S. Small Business Administration ("SBA") for participation in its Bond Guarantee Program.

PERFORMANCE BOND #1

KNOW ALL PERSONS BY THESE PRESENTS:,
That we, _____

_____

_____

hereinafter referred to as the "Principal,"
and, _____

_____

_____

hereinafter referred to as the "Surety" ("Sureties") are held and firmly bound to THE CITY OF NEW YORK, hereinafter referred to as the "City" or to its successors and assigns in the penal sum
of _____

_____

_____

($_____) Dollars, lawful money of the United States for the payment of which said sum of money well and truly to be made, we, and each of us, bind ourselves, our heirs, executors, administrators, successors and assigns, jointly and severally, firmly by these presents.

WHEREAS, the Principal is about to enter, or has entered, into a Contract in writing with the City for

_____

_____

a copy of which Contract is annexed to and hereby made a part of this bond as though herein set forth in full;

NOW, THEREFORE, the conditions of this obligation are such that if the Principal, his or its representatives or assigns, shall well and faithfully perform the said Contract and all modifications, amendments, additions and alterations thereto that may hereafter be made, according to its terms and its true intent and meaning, including repair and or replacement of defective work and guarantees of maintenance for the periods stated in the Contract, and shall fully indemnify and save harmless the City from all cost and damage which it may suffer by reason of the Principal's default of the Contract, and shall fully reimburse and repay the City for all outlay and expense which the City may incur in making

Performance Bond #1 (Pages 100 to 103): Use if the total contract price is $5 Million Or Less. Performance Bond #1 has been approved by the U.S. Small Business Administration ("SBA") for participation in its Bond Guarantee Program.

good any such default and shall protect the said City of New York against, and pay any and all amounts, damages, cost and judgments which may or shall be recovered against said City or its officers or agents or which the said City of New York may be called upon to pay any person or corporation by reason of any damages arising or growing out of the Principal's default of the Contract, then this obligation shall be null and void, otherwise to remain in full force and effect.

The Surety (Sureties), for value received, hereby stipulates and agrees, upon written notice from the City that the City has determined that the Principal is in default of the Contract, to (1) pay the City the cost to complete the contract as determined by the City in excess of the balance of the Contract held by the City, plus any damages or costs to which the City is entitled, up to the full amount of the above penal sum, (2) fully perform and complete the Work to be performed under the Contract, pursuant to the terms, conditions, and covenants thereof, or (3) tender a completion Contractor that is acceptable to the City. The Surety (Sureties) further agrees, at its option, either to notify the City that it elects to pay the city the cost of completion plus any applicable damages and costs under option (1) above, or to commence and diligently perform the Work specified in the Contract, including physical site work, within twenty-five (25) business days after written notice thereof from the City and, if the Surety elects to fully perform and complete the Work, then to complete all Work within the time set forth in the Contract or such other time as agreed to between the City and Surety in accordance with the Contract. If the Surety elects to tender payment pursuant to (1) above, then the Surety shall tender such amount within fifteen (15) business days notification from the City of the cost of completion. The Surety and the City reserve all rights and defenses each may have against the other; provided, however, that the Surety expressly agrees that its reservation of rights shall not provide a basis for non-performance of its obligation to pay the City the cost of completion, to commence and complete all Work as provided herein, or to tender a completion contractor.

The Surety (Sureties), for value received, for itself and its successors and assigns, hereby stipulates and agrees that the obligation of said Surety (Sureties) and its bond shall be in no way impaired or affected by any extension of time, modification, omission, addition, or change in or to the said Contract or the Work to be performed thereunder, or by any payment thereunder before the time required therein, or by any waiver of any provisions thereof, or any moneys due or to become due thereunder; and said Surety (Sureties) does hereby waive notice of any and all of such extensions, modifications, omissions, additions, changes, payments, and waivers, and hereby expressly stipulates and agrees that any and all things done and omitted to be done by and in relation to subcontractors shall have the same effect as to said Surety (Sureties) as though done or omitted to be done by or in relation to said Principal. Notwithstanding the above, if the City makes payments to the Principal before the time required by the contract that in the aggregate exceed $100,000 or 10% of the Contract price, whichever is less, and that have not become earned prior to the Principal being found to be in default, then all payments made to the Principal before the time required by the Contract shall be added to the remaining contract value available to be paid for the completion of the Contract as if such sums had not been paid to the Principal, but shall not provide a basis for non-performance of its obligation to pay the City the cost of completion, to commence and to complete all Work as provided herein, or to tender a completion contractor.

Performance Bond #1 (Pages 100 to 103): Use if the total contract price is $5 Million Or Less. Performance Bond #1 has been approved by the U.S. Small Business Administration ("SBA") for participation in its Bond Guarantee Program.

IN WITNESS WHEREOF, The Principal and the Surety (Sureties) have hereunto set their hands and seals, and such of them as are corporations have caused their corporate seals to be hereunto affixed and these presents to be signed by their proper officers, this

_____ day of _____, 20_____.

(Seal)

_____(L.S.)
Principal

By:_____.

(Seal)

Surety

By:_____.
_____.

(Seal)

Surety

By:_____.
_____.

(Seal)

Surety

By:_____.
_____.

(Seal)

Surety

By:_____.
_____.

(Seal)

Surety

By:_____.

Bond Premium Rate _____.

Bond Premium Cost _____.

If the Contractor (Principal) is a partnership, the bond should be signed by each of the individuals who are partners.

If the Contractor (Principal) is a corporation, the bond should be signed in its correct corporate name by a duly authorized officer, agent, or attorney-in-fact.

There should be executed an appropriate number of counterparts of the bond corresponding to the number of counterparts of the Contract.

Performance Bond #1 (Pages 100 to 103): Use if the total contract price is $5 Million Or Less. Performance Bond #1 has been approved by the U.S. Small Business Administration ("SBA") for participation in its Bond Guarantee Program.m.

ACKNOWLEDGMENT OF PRINCIPAL IF A CORPORATION

State of _____ County of _____ ss:

On this _____ day of _____, 20_____ before me personally came _____,
to me known, who, being by me duly sworn did depose and say that he/she resides at _____
_____; that he/she is the _____
of the corporation described in and which executed the foregoing instrument; and that he/she signed his/her name to the foregoing instrument by order of the directors of said corporation as the duly authorized and binding act thereof.

_____
Notary Public or Commissioner of Deeds.

ACKNOWLEDGMENT OF PRINCIPAL IF A PARTNERSHIP

State of _____ County of _____ ss:

On this _____ day of _____, 20 _____ before me personally came _____,
to me known, who, being by me duly sworn did dispose and say that he/she resides at _____
_____; that he/she is _____ partner of _____, a limited/general partnership existing under the laws of the State of _____, the partnership described in and which executed the foregoing instrument; and that he/she signed his/her name to the foregoing instrument as the duly authorized and binding act of said partnership.

_____
Notary Public or Commissioner of Deeds.

ACKNOWLEDGMENT OF PRINCIPAL IF AN INDIVIDUAL

State of _____ County of _____ ss:

On this _____ day of _____, 20_____ before me personally came _____,
to me known, who,.being by me duly sworn did depose and say that he/she resides at _____
_____, and that he/she is the individual whose name is subscribed to the within instrument and acknowledged to me that by his/her signature on the instrument, said individual executed the instrument.

_____
Notary Public or Commissioner of Deeds

Each executed bond should be accompanied by: (a) appropriate acknowledgments of the respective parties; (b) appropriate duly certified copy of Power of Attorney or other certificate of authority where bond is executed by agent, officer or other representative of Principal or Surety; (c) a duly certified extract from By-Laws or resolutions of Surety under which Power of Attorney or other certificate of authority of its agent, officer or representative was issued, and (d) certified copy of latest published financial statement of assets and liabilities of Surety.

* * * * * * * *

Affix Acknowledgments and Justification of Sureties.

Performance Bond #2 (Pages 96 to 99): Use if the total contract price is more than $5 Million.

Bond #B1192087

PERFORMANCE BOND #2

KNOW ALL PERSONS BY THESE PRESENTS:,
That we, Perfetto Enterprises Co., Inc.
2074 Richmond Terrace, Staten Island, NY 10302
hereinafter referred to as the "Principal,"
and, Selective Insurance Company of America
40 Wantage Avenue, Branchville, NJ 07890
hereinafter referred to as the "Surety" ("Sureties") are held and firmly bound to THE CITY OF NEW YORK, hereinafter referred to as the "City" or to its successors and assigns in the penal sum
of Seven Million Two Hundred Thousand Dollars and Zero Cents
($ 7,200,000.) Dollars, lawful money of the United States for the payment of which said sum of money well and truly to be made, we, and each of us, bind ourselves, our heirs, executors, administrators, successors and assigns, jointly and severally, firmly by these presents.

WHEREAS, the Principal is about to enter, or has entered, into a Contract in writing with the City for
FMS ID: SEK201BN7; E-PIN: 85018B0005001; DDC PIN: 8502017SE0023C; Reconstruction of Collapsed or Defective Sanitary, Storm or Combined Sewers Vitrified Clay Pipe in Various Locations, Brooklyn
a copy of which Contract is annexed to and hereby made a part of this bond as though herein set forth in full;

NOW, THEREFORE, the conditions of this obligation are such that if the Principal, his or its representatives or assigns, shall well and faithfully perform the said Contract and all modifications, amendments, additions and alterations thereto that may hereafter be made, according to its terms and its true intent and meaning, including repair and or replacement of defective work and guarantees of maintenance for the periods stated in the Contract, and shall fully indemnify and save harmless the City from all cost and damage which it may suffer by reason of the Principal's default of the Contract, and shall fully reimburse and repay the City for all outlay and expense which the City may incur in making

Performance Bond #2 (Pages 96 to 99): Use if the total contract price is more than $5 Million.

good any such default and shall protect the said City of New York against, and pay any and all amounts, damages, cost and judgments which may or shall be recovered against said City or its officers or agents or which the said City of New York may be called upon to pay any person or corporation by reason of any damages arising or growing out of the Principal's default of the Contract, then this obligation shall be null and void, otherwise to remain in full force and effect.

The Surety (Sureties), for value received, hereby stipulates and agrees, upon written notice from the City that the City has determined that the Principal is in default of the Contract, to either (1) pay the full amount of the above penal sum in complete discharge and exoneration of this bond and of all the liabilities of the Surety relating to this bond, or (2) fully perform and complete the Work to be performed under the Contract, pursuant to the terms, conditions, and covenants thereof. The Surety (Sureties) further agrees, at its option, either to tender the penal sum or to commence and diligently perform the Work specified in the Contract, including physical site work, within twenty-five (25) business days after written notice thereof from the City and to complete all Work within the time set forth in the Contract or such other time as agreed to between the City and Surety in accordance with the Contract. The Surety and the City reserve all rights and defenses each may have against the other; provided, however, that the Surety expressly agrees that its reservation of rights shall not provide a basis for non-performance of its obligation to commence and to complete all Work as provided herein.

The Surety (Sureties), for value received, for itself and its successors and assigns, hereby stipulates and agrees that the obligation of said Surety (Sureties) and its bond shall be in no way impaired or affected by any extension of time, modification, omission, addition, or change in or to the said Contract or the Work to be performed thereunder, or by any payment thereunder before the time required therein, or by any waiver of any provisions thereof, or by any assignment, subletting or other transfer thereof or of any Work to be performed or any moneys due or to become due thereunder; and said Surety (Sureties) does hereby waive notice of any and all of such extensions, modifications, omissions, additions, changes, payments, waivers, assignments, subcontracts and transfers, and hereby expressly stipulates and agrees that any and all things done and omitted to be done by and in relation to assignees, subcontractors, and other transferees shall have the same effect as to said Surety (Sureties) as though done or omitted to be done by or in relation to said Principal.

Performance Bond #2 (Pages 96 to 99): Use if the total contract price is more than $5 Million.

IN WITNESS WHEREOF, The Principal and the Surety (Sureties) have hereunto set their hands and seals, and such of them as are corporations have caused their corporate seals to be hereunto affixed and these presents to be signed by their proper officers, this

6th day of December 20 17.

(Seal)

Perfetto Enterprises Co., Inc. (L.S.)
Principal

By: _____
Claudio Perfetto President

(Seal)
Surety

By: _____

Selective Insurance Company of America
Surety

(Seal)

By: _____

Michael Culnen, Attorney-In-Fact
Surety

(Seal)

By: _____

Surety

(Seal)

By: _____

Surety

(Seal)

By: _____

Bond Premium Rate 31.25/18.75/12.50/9.38/8.75

Bond Premium Cost $78,325.00

If the Contractor (Principal) is a partnership, the bond should be signed by each of the individuals who are partners.

If the Contractor (Principal) is a corporation, the bond should be signed in its correct corporate name by a duly authorized officer, agent, or attorney-in-fact.

There should be executed an appropriate number of counterparts of the bond corresponding to the number of counterparts of the Contract.

Performance Bond #2 (Pages 96 to 99): Use if the total contract price is more than $5 Million.

ACKNOWLEDGMENT OF PRINCIPAL IF A CORPORATION

State of New York County of Richmond ss:

On this 11th day of December, 20 17 before me personally came Claudio Perfetto,
to me known, who, being by me duly sworn did depose and say that he resides
at 134 Chapin Avenue
Staten Island, NY 10304; that he/she is the President
of the corporation described in and which executed the foregoing instrument; that he/she signed his/her name to the foregoing instrument by order of the directors of said corporation as the duly authorized and binding act thereof.

Notary Public or Commissioner of Deeds.

KATHY FERETZANIS
Notary Public, State of New York
No. 01FE6022837
Qualified in Kings County
Commission Expires April 05, 20 19

ACKNOWLEDGMENT OF PRINCIPAL IF A PARTNERSHIP

State of _____ County of _____ ss:

On this _____ day of _____, 20 _____ before me personally came _____,
to me known, who, being by me duly sworn did depose and say that he/she resides
at _____

_____; that he/she is _____ partner of _____, a limited/general partnership existing under the laws of the State of _____, the partnership described in and which executed the foregoing instrument; and that he/she signed his/her name to the foregoing instrument as the duly authorized and binding act of said partnership.

_____
Notary Public or Commissioner of Deeds

ACKNOWLEDGMENT OF PRINCIPAL IF AN INDIVIDUAL

State of _____ County of _____ ss:

On this _____ day of _____, 20_____ before me personally came _____,
to me known, who, being by me duly sworn did depose and say that he/she resides
at _____

_____, and that he/she is the individual whose name is subscribed to the within instrument and acknowledged to me that by his/her signature on the instrument, said individual executed the instrument.

_____
Notary Public or Commissioner of Deeds

Each executed bond should be accompanied by: (a) appropriate acknowledgments of the respective parties; (b) appropriate duly certified copy of Power of Attorney or other certificate of authority where bond is executed by agent, officer or other representative of Principal or Surety; (c) a duly certified extract from By-Laws or resolutions of Surety under which Power of Attorney or other certificate of authority of its agent, officer or representative was issued, and (d) certified copy of latest published financial statement of assets and liabilities of Surety.

* * * * * * * *

Affix Acknowledgments and Justification of Sureties.

SURETY ACKNOWLEDGEMENT

State of **New Jersey**
SS:
County of **Essex**

On this **6th** day of **December , 2017,** before me personally comes **Michael Culnen** to me known, who, being by me duly sworn, deposes and says that he resides in **Mendham Township, NJ** that he is the Attorney-In-Fact of the **Selective Insurance Company of America** the Corporation described in and which executed the foregoing instrument; that he knows that seal of said Corporation; that the seal affixed to the said instrument is such Corporate seal; that it was so affixed by the order of the Board of Directors of the said Corporation, and that he signed his name thereto by like order.

CATHY M. KNOKE
NOTARY PUBLIC
STATE OF NEW JERSEY
ID # 50009608
MY COMMISSION EXPIRES FEB. 4, 2020

(Signature and Title of Official Taking Acknowledgement)

Payment Bond (Pages 100 to 103): Use for any contract for which a Payment Bond is required.

Bond #B1192087

PAYMENT BOND

KNOW ALL PERSONS BY THESE PRESENTS, That we,

Perfetto Enterprises Co., Inc.

2074 Richmond Terrace

Staten Island, NY 10302

hereinafter referred to as the "Principal", and

Selective Insurance Company of America

40 Wantage Avenue

Branchville, NJ 07890

hereinafter referred to as the "Surety" ("Sureties") are held and firmly bound to THE CITY OF NEW YORK, hereinafter referred to as the "City" or to its successors and assigns, in the penal sum of

Seven Million Two Hundred Thousand Dollars and Zero Cents

($7,200,000.) Dollars, lawful money of the United States, for the payment of which said sum of money well and truly to be made, we, and each of us, bind ourselves, our heirs, executors, administrators, successors and assigns, jointly and severally, firmly by these presents.

WHEREAS, the Principal is about to enter, or has entered, into a Contract in writing with the City for

FMS ID: SEK201BN7; E-PIN: 85018B0005001; DDC PIN: 8502017SE0023C; Reconstruction of Collapsed or Defective Sanitary, Storm or Combined Sewers Vitrified Clay Pipe in Various Locations, Brooklyn

a copy of which Contract is annexed to and hereby made a part of this bond as though herein set forth in full;

NOW, THEREFORE, the conditions of this obligation are such that if the Principal, his or its representatives or assigns and other Subcontractors to whom Work under this Contract is sublet and his or their successors and assigns shall promptly pay or cause to be paid all lawful claims for

(a) Wages and compensation for labor performed and services rendered by all persons engaged in the prosecution of the Work under said Contract, and any amendment or extension thereof or addition thereto, whether such persons be agents servants or employees of the Principal or any such Subcontractor, including all persons so engaged who perform the work of laborers or mechanics at or in the vicinity of the site

Payment Bond (Pages 100 to 103): Use for any contract for which a Payment Bond is required.

of the Project regardless of any contractual relationship between the Principal or such Subcontractors, or his or their successors or assigns, on the one hand and such laborers or mechanics on the other, but not including office employees not regularly stationed at the site of the project; and

(b) Materials and supplies (whether incorporated in the permanent structure or not), as well as teams, fuels, oils, implements or machinery furnished, used or consumed by said Principal or any subcontractor at or in the vicinity of the site of the Project in the prosecution of the Work under said Contract and any amendment or extension thereof or addition thereto; then this obligation shall be void, otherwise to remain in full force and effect.

This bond is subject to the following additional conditions, limitations and agreements:

(a) The Principal and Surety (Sureties) agree that this bond shall be for the benefit of any materialmen or laborer having a just claim, as well as the City itself.

(b) All persons who have performed labor, rendered services or furnished materials and supplies, as aforesaid, shall have a direct right of action against the Principal and his, its or their successors and assigns, and the Surety (Sureties) herein, or against either or both or any of them and their successors and assigns. Such persons may sue in their own name, and may prosecute the suit to judgment and execution without the necessity of joining with any other persons as party plaintiff.

(c) The Principal and Surety (Sureties) agree that neither of them will hold the City liable for any judgment for costs of otherwise, obtained by either or both of them against a laborer or materialman in a suit brought by either a laborer or materialman under this bond for moneys allegedly due for performing work or furnishing material.

(d) The Surety (Sureties) or its successors and assigns shall not be liable for any compensation recoverable by an employee or laborer under the Workmen's Compensation Law.

(e) In no event shall the Surety (Sureties), or its successors or assigns, be liable for a greater sum than the penalty of this bond or be subject to any suit, action or proceeding hereon that is instituted by any person, firm, or corporation hereunder later than two years after the complete performance of said Contract and final settlement thereof.

The Principal, for himself and his successors and assigns, and the Surety (Sureties), for itself and its successors and assigns, do hereby expressly waive any objection that might be interposed as to the right of the City to require a bond containing the foregoing provisions, and they do hereby further expressly waive any defense which they or either of them might interpose to an action brought hereon by any person, firm or corporation, including subcontractors, materialmen and third persons, for work, labor, services, supplies or material performed rendered, or furnished as aforesaid upon the ground that there is no law authorizing the City to require the foregoing provisions to be place in this bond.

And the Surety (Sureties), for value received, for itself and its successors and assigns, hereby stipulates and agrees that the obligation of said Surety (Sureties), and its bonds shall be in no way impaired or affected by any extension of time, modification, omission, addition, or change in or of the said Contract or the work to be performed thereunder, or by any payment thereunder before the time required therein, or by any waiver of any provisions thereof, or by any assignment, subletting or other transfer thereof or of any part thereof, or of any Work to be performed, or any moneys due to become due thereunder and said Surety (Sureties) does hereby waive notice of any and all of such extensions, modifications, omissions, additions, changes, payments, waivers, assignments, subcontracts and transfers, and hereby expressly stipulates and agrees that any and all things done and omitted to be done by and in relation to assignees, Subcontractors, and other transferees shall have the same effect as to said Surety (Sureties) as though done or omitted to be done or in relation to said Principal.

Payment Bond (Pages 100 to 103): Use for any contract for which a Payment Bond is required.

IN WITNESS WHEREOF, the Principal and the Surety (Sureties) have hereunto set their hands and seals, and such of them as are corporations have caused their corporate seals to be hereunto affixed and these presents to be signed by their proper officers, this 6th day of December, 2017.

(Seal) Perfetto Enterprises Co., Inc. (L.S.)
Principal

By: _____
Claudio Perfetto, President

(Seal) Selective Insurance Company of America
Surety

By: _____
Michael Culnen, Attorney-In-Fact

(Seal) _____
Surety

By: _____

(Seal) _____
Surety

By: _____

(Seal) _____
Surety

By: _____

If the Contractor (Principal) is a partnership, the bond should be signed by each of the individuals who are partners.

If the Contractor (Principal) is a corporation, the bond should be signed in its correct corporate name by a duly authorized officer, agent, or attorney-in-fact.

There should be executed an appropriate number of counterparts of the bond corresponding to the number of counterparts of the Contract.

Payment Bond (Pages 100 to 103): Use for any contract for which a Payment Bond is required.

ACKNOWLEDGMENT OF PRINCIPAL, IF A CORPORATION

State of New York County of Richmond ss:

On this 11 day of December 2017, _____, before me personally came Claudio Perfetto to me known, who, being by me duly sworn did depose and say that he resides at 134 Chapin Avenue Staten Island, New York 10304 that he is the President of the corporation described in and which executed the foregoing instrument; that he knows the seal of said corporation; that one of the seals affixed to said instrument is such seal; that it was so affixed by order of the directors of said corporation, and that he signed his name thereto by like order.

Notary Public or Commissioner of Deeds

KATHY FERETZANIS
Notary Public, State of New York
No. 01FE6022837
Qualified in Kings County
Commission Expires April 05, 20 19

ACKNOWLEDGMENT OF PRINCIPAL, IF A PARTNERSHIP

State of _____ County of _____ ss:

On this _____ day of _____, _____, before me personally appeared _____ to me known, and known to me to be one of the members of the firm of _____ described in and who executed the foregoing instrument; and he acknowledged to me that he executed the same as and for the act and deed of said firm.

_____
Notary Public or Commissioner of Deeds

ACKNOWLEDGMENT OF PRINCIPAL, IF AN INDIVIDUAL

State of _____ County of _____ ss:

On this _____ day of _____, _____, before me personally appeared _____ to me known, and known to me to be the person described in and who executed the foregoing instrument; and acknowledged that he executed the same.

_____
Notary Public or Commissioner of Deeds

Each executed bond should be accompanied by: (a) appropriate acknowledgments of the respective parties; (b) appropriate duly certified copy of Power of Attorney or other certificate of authority where bond is executed by agent, officer or other representative of Principal or Surety; (c) a duly certified extract from By-Laws or resolutions of Surety under which Power of Attorney or other certificate of authority of its agent, officer or representative was issued, and (d) certified copy of latest published financial statement of assets and liabilities of Surety.

* * * * * * * *

Affix Acknowledgments and Justification of Sureties.

SURETY ACKNOWLEDGEMENT

State of **New Jersey**
SS:
County of **Essex**

On this **6th** day of **December , 2017,** before me personally comes **Michael Culnen** to me known, who, being by me duly sworn, deposes and says that he resides in **Mendham Township, NJ** that he is the Attorney-In-Fact of the **Selective Insurance Company of America** the Corporation described in and which executed the foregoing instrument; that he knows that seal of said Corporation; that the seal affixed to the said instrument is such Corporate seal; that it was so affixed by the order of the Board of Directors of the said Corporation, and that he signed his name thereto by like order.

CATHY M KNOKE
NOTARY PUBLIC
STATE OF NEW JERSEY
ID # 50009608
MY COMMISSION EXPIRES FEB. 4, 2020

(Signature and Title of Official Taking Acknowledgement)

SELECTIVE®

Selective Insurance Company of America
40 Wantage Avenue
Branchville, New Jersey 07890
973-948-3000

BondNo.B 1192087

POWER OF ATTORNEY

Class B Performance Bond

SELECTIVE INSURANCE COMPANY OF AMERICA, a New Jersey corporation having its principal office at 40 Wantage Avenue, in Branchville, State of New Jersey ("SICA"), pursuant to Article VII, Section 1 of its By-Laws, which state in pertinent part:

> The Chairman of the Board, President, Chief Executive Officer, any Executive Vice President, any Senior Vice President or any Corporate Secretary may, from time to time, appoint attorneys in fact, and agents to act for and on behalf of the Corporation and they may give such appointee such authority, as his/her certificate of authority may prescribe, to sign with the Corporation's name and seal with the Corporation's seal, bonds, recognizances, contracts of indemnity and other writings obligatory in the nature of a bond, recognizance or conditional undertaking, and any of said Officers may, at any time, remove any such appointee and revoke the power and authority given him/her.

does hereby appoint **Michael Culnen**

, its true and lawful attorney(s)-in-fact, full authority to execute on SICA's behalf fidelity and surety bonds or undertakings and other documents of a similar character issued by SICA in the course of its business, and to bind SICA thereby as fully as if such instruments had been duly executed by SICA's regularly elected officers at its principal office, in amounts or penalties not exceeding the sum of: **Seven Million Two Hundred Thousand Dollars ($7,200,000.00)**

Signed this **6th** day of **December**, **2017**

SELECTIVE INSURANCE COMPANY OF AMERICA

By: _____
Brian C. Sarisky
Its SVP, Strategic Business Units, Commercial Lines

SELECTIVE INSURANCE COMPANY OF AMERICA CORPORATE SEAL 1926 NEW JERSEY

CERTIFIED COPY

STATE OF NEW JERSEY :
:ss. Branchville
COUNTY OF SUSSEX :

On this **6th** day of **Decembe**, **2017** before me, the undersigned officer, personally appeared Brian C. Sarisky, who acknowledged himself to be the Sr. Vice President of SICA, and that he, as such Sr. Vice President, being authorized so to do, executed the foregoing instrument for the purposes therein contained, by signing the name of the corporation by himself as Sr. Vice President and that the same was his free act and deed and the free act and deed of SICA.

Charlene Kimble
Notary Public of New Jersey
My Commission Expires 6/2/2021

Notary Public

CHARLENE KIMBLE NOTARY PUBLIC NEW JERSEY

The power of attorney is signed and sealed by facsimile under and by the authority of the following Resolution adopted by the Board of Directors of SICA at a meeting duly called and held on the 6th of February 1987, to wit:

"RESOLVED, the Board of Directors of Selective Insurance Company of America authorizes and approves the use of a facsimile corporate seal, facsimile signatures of corporate officers and notarial acknowledgements thereof on powers of attorney for the execution of bonds, recognizances, contracts of indemnity and other writing obligatory in the nature of a bond, recognizance or conditional undertaking."

CERTIFICATION

I do hereby certify as SICA's Corporate Secretary that the foregoing extract of SICA's By-Laws and Resolution are still in force and effect and this Power of Attorney issued pursuant to and in accordance with the By-Laws is valid.

Signed this **6th** day of **December**, **2017**.

Michael H. Lanza, SICA Corporate Secretary

SELECTIVE INSURANCE COMPANY OF AMERICA CORPORATE SEAL 1926 NEW JERSEY

Important Notice: If the bond number embedded within the Notary Seal does not match the number in the upper right-hand corner of this Power of Attorney, contact us at 973-948-3000.

SELECTIVE®

Selective Insurance Company of America
40 Wantage Avenue
Branchville, New Jersey 07890
973-948-3000

BondNo.B 1192087

STATEMENT OF FINANCIAL CONDITION

Class B Performance Bond

I hereby certify that the following information is contained in the Annual Statement of Selective Insurance Company of America ("SICA") to the New Jersey Department of Banking and Insurance as of December 31, 2016:

ADMITTED ASSETS (in thousands)		**LIABILITIES AND SURPLUS** (in thousands)	
Bonds	$1,517,188	Reserve for losses and loss expenses	$980,125
Preferred stocks at convention value	3,960	Reserve for unearned premiums	357,292
Common stocks at convention values	85,162	Provision for unauthorized reinsurance	803
Subsidiary common stock at convention values	0	Commissions payable and contingent commissions	29,684
Short-term investments	86,071	Other accrued expenses	25,337
Mortgage loans on real estate (including collateral loans)	34,324	Other liabilities	352,332
Other invested assets	70,422	Total liabilities	1,745,573
Interest and dividends due or accrued	14,989		
Premiums receivable	336,651	Surplus as regards policyholders	568,591
Other admitted assets	165,397		
Total admitted assets	2,314,164	Total liabilities and surplus as regards policyholders	2,314,164

I further certify that the following is a true and exact excerpt from Article VII, Section 1 of the By-Laws of SICA, which is still valid and existing.

> The Chairman of the Board, President, Chief Executive Officer, any Executive Vice President, any Senior Vice President or any Corporate Secretary may, from time to time, appoint attorneys in fact, and agents to act for and on behalf of the Corporation and they may give such appointee such authority, as his/her certificate of authority may prescribe, to sign with the Corporation's name and seal with the Corporation's seal, bonds, recognizances, contracts of indemnity and other writings obligatory in the nature of a bond, recognizance or conditional undertaking, and any of said Officers may, at any time, remove any such appointee and revoke the power and authority given him/her.

IN WITNESS WHEREOF, I hereunto subscribe my name and affix the seal of SICA this 22 day of February 2017.

Michael H. Lanza
SICA Corporate Secretary

SEAL 1926 NEW JERSEY

STATE OF NEW JERSEY :
:ss. Branchville
COUNTY OF SUSSEX :

On this 22 day of February 2017, before me, the undersigned officer, personally appeared Michael H. Lanza, who acknowledged himself to be the Corporate Secretary of SICA, and that he, as such Corporate Secretary, being authorized so to do, executed the foregoing instrument for the purposes therein contained, by signing the name of the corporation by himself as Corporate Secretary.

CHARLENE KIMBLE NOTARY PUBLIC NEW JERSEY

Notary Public
My Commission Expires:

Charlene Kimble
Notary Public of New Jersey
My Commission Expires 6/2/2021

Client#: 1335944 PERFEENT2

ACORD™ CERTIFICATE OF LIABILITY INSURANCE

DATE (MM/DD/YYYY) 12/07/2017

THIS CERTIFICATE IS ISSUED AS A MATTER OF INFORMATION ONLY AND CONFERS NO RIGHTS UPON THE CERTIFICATE HOLDER. THIS CERTIFICATE DOES NOT AFFIRMATIVELY OR NEGATIVELY AMEND, EXTEND OR ALTER THE COVERAGE AFFORDED BY THE POLICIES BELOW. THIS CERTIFICATE OF INSURANCE DOES NOT CONSTITUTE A CONTRACT BETWEEN THE ISSUING INSURER(S), AUTHORIZED REPRESENTATIVE OR PRODUCER, AND THE CERTIFICATE HOLDER.

IMPORTANT: If the certificate holder is an ADDITIONAL INSURED, the policy(ies) must be endorsed. If SUBROGATION IS WAIVED, subject to the terms and conditions of the policy, certain policies may require an endorsement. A statement on this certificate does not confer rights to the certificate holder in lieu of such endorsement(s).

PRODUCER
USI Insurance Svcs - KORE CL
300 Executive Drive
West Orange, NJ 07052
973 965-3100

CONTACT NAME: Katlen Yesse
PHONE (A/C, No, Ext): 973 965-3165 **FAX (A/C, No):** 610 537-4508
E-MAIL ADDRESS: katlen.yesse@usi.com

INSURER(S) AFFORDING COVERAGE	NAIC #
INSURER A : AXIS Surplus Insurance Company	26620
INSURER B : Endurance American Specialty In	41718
INSURER C : Starr Indemnity & Liability Com	38318
INSURER D : New York State Insurance Fund,	36102
INSURER E : Aspen American Insurance Compan	43460
INSURER F :	

INSURED
Perfetto Enterprises Co., Inc.
2074 Richmond Terrace
Staten Island, NY 10302

COVERAGES **CERTIFICATE NUMBER:** **REVISION NUMBER:**

THIS IS TO CERTIFY THAT THE POLICIES OF INSURANCE LISTED BELOW HAVE BEEN ISSUED TO THE INSURED NAMED ABOVE FOR THE POLICY PERIOD INDICATED. NOTWITHSTANDING ANY REQUIREMENT, TERM OR CONDITION OF ANY CONTRACT OR OTHER DOCUMENT WITH RESPECT TO WHICH THIS CERTIFICATE MAY BE ISSUED OR MAY PERTAIN, THE INSURANCE AFFORDED BY THE POLICIES DESCRIBED HEREIN IS SUBJECT TO ALL THE TERMS, EXCLUSIONS AND CONDITIONS OF SUCH POLICIES. LIMITS SHOWN MAY HAVE BEEN REDUCED BY PAID CLAIMS.

INSR LTR	TYPE OF INSURANCE	ADDL INSR	SUBR WVD	POLICY NUMBER	POLICY EFF (MM/DD/YYYY)	POLICY EXP (MM/DD/YYYY)	LIMITS	
A	X COMMERCIAL GENERAL LIABILITY			P00100000091801	01/29/2017	01/29/2018	EACH OCCURRENCE	$1,000,000
	CLAIMS-MADE X OCCUR						DAMAGE TO RENTED PREMISES (Ea occurrence)	$100,000
							MED EXP (Any one person)	$
							PERSONAL & ADV INJURY	$1,000,000
	GEN'L AGGREGATE LIMIT APPLIES PER:						GENERAL AGGREGATE	$2,000,000
	POLICY X PRO-JECT LOC						PRODUCTS - COMP/OP AGG	$2,000,000
	OTHER:							$
	AUTOMOBILE LIABILITY						COMBINED SINGLE LIMIT (Ea accident)	$
	ANY AUTO						BODILY INJURY (Per person)	$
	ALL OWNED AUTOS / SCHEDULED AUTOS						BODILY INJURY (Per accident)	$
	HIRED AUTOS / NON-OWNED AUTOS						PROPERTY DAMAGE (Per accident)	$
								$
B	X UMBRELLA LIAB OCCUR			ELD30000250000	01/29/2017	01/29/2018	EACH OCCURRENCE	$5,000,000
	X EXCESS LIAB X CLAIMS-MADE						AGGREGATE	$5,000,000
C	DED RETENTION $			1000023430	01/29/2017	01/29/2018	Occ/Agg	$5,00,000
D	WORKERS COMPENSATION AND EMPLOYERS' LIABILITY Y / N			V23894546	03/14/2017	03/14/2018	X PER STATUTE OTH-ER	
	ANY PROPRIETOR/PARTNER/EXECUTIVE OFFICER/MEMBER EXCLUDED? N	N / A					E.L. EACH ACCIDENT	$1,000,000
	(Mandatory in NH) If yes, describe under DESCRIPTION OF OPERATIONS below						E.L. DISEASE - EA EMPLOYEE	$1,000,000
							E.L. DISEASE - POLICY LIMIT	$1,000,000

DESCRIPTION OF OPERATIONS / LOCATIONS / VEHICLES (ACORD 101, Additional Remarks Schedule, may be attached if more space is required)

RE: FMS ID: SEK201BN7; E-PIN: 85018B0005001; DDC PIN: 8502017SE0023C, Reconstruction of Collapsed or Defective Sanitary, Storm or Combined Sewers Vitried Clay pipe in Various locations, Brooklyn, NY.
The City of New York, National Grid Energy Delivery, including its officials and employees are included as Additional Insured on General Liability, Excess and Auto with coverage at least as broad as ISO Form CG 2010 & CG 2037, all coverage are primary and non-contributory, with coverage in accordance with the terms,
(See Attached Descriptions)

CERTIFICATE HOLDER
New York Department of Design & Construction
30-30 Thomson Avenue
Long Island City, NY 11101

CANCELLATION
SHOULD ANY OF THE ABOVE DESCRIBED POLICIES BE CANCELLED BEFORE THE EXPIRATION DATE THEREOF, NOTICE WILL BE DELIVERED IN ACCORDANCE WITH THE POLICY PROVISIONS.

AUTHORIZED REPRESENTATIVE

© 1988-2014 ACORD CORPORATION. All rights reserved.

DESCRIPTIONS (Continued from Page 1)

conditional and exclusions of the policy and written contract. Waiver of Subrogation applies.

ATTACH C105, DB120 & CERT BY BROKER

THIS ENDORSEMENT CHANGES THE POLICY. PLEASE READ IT CAREFULLY.

ADDITIONAL INSURED – OWNERS, LESSEES OR CONTRACTORS – SCHEDULED PERSON OR ORGANIZATION

This endorsement modifies insurance provided under the following:

COMMERCIAL GENERAL LIABILITY COVERAGE PART

SCHEDULE

Name Of Additional Insured Person(s) Or Organization(s)	Location(s) Of Covered Operations
Any person or organization where the Named Insured has agreed in a written contract or agreement to name as an additional insured provided that the contract or agreement was executed prior to the loss or occurrence.	All Locations at which the Named Insured is performing on-going operations.
Information required to complete this Schedule, if not shown above, will be shown in the Declarations.	

A. Section II – Who Is An Insured is amended to include as an additional insured the person(s) or organization(s) shown in the Schedule, but only with respect to liability for "bodily injury", "property damage" or "personal and advertising injury" caused, in whole or in part, by:

1. Your acts or omissions; or
2. The acts or omissions of those acting on your behalf;

in the performance of your ongoing operations for the additional insured(s) at the location(s) designated above.

However:

1. The insurance afforded to such additional insured only applies to the extent permitted by law; and
2. If coverage provided to the additional insured is required by a contract or agreement, the insurance afforded to such additional insured will not be broader than that which you are required by the contract or agreement to provide for such additional insured.

B. With respect to the insurance afforded to these additional insureds, the following additional exclusions apply:

This insurance does not apply to "bodily injury" or "property damage" occurring after:

1. All work, including materials, parts or equipment furnished in connection with such work, on the project (other than service, maintenance or repairs) to be performed by or on behalf of the additional insured(s) at the location of the covered operations has been completed; or
2. That portion of "your work" out of which the injury or damage arises has been put to its intended use by any person or organization other than another contractor or subcontractor engaged in performing operations for a principal as a part of the same project.

© Insurance Services Office, Inc., 2012

C. With respect to the insurance afforded to these additional insureds, the following is added to **Section III – Limits Of Insurance:**

If coverage provided to the additional insured is required by a contract or agreement, the most we will pay on behalf of the additional insured is the amount of insurance:

1. Required by the contract or agreement; or

2. Available under the applicable Limits of Insurance shown in the Declarations;

whichever is less.

This endorsement shall not increase the applicable Limits of Insurance shown in the Declarations.

© Insurance Services Office, Inc., 2012

THIS ENDORSEMENT CHANGES THE POLICY. PLEASE READ IT CAREFULLY.

ADDITIONAL INSURED – OWNERS, LESSEES OR CONTRACTORS – SCHEDULED PERSON OR ORGANIZATION

This endorsement modifies insurance provided under the following:

COMMERCIAL GENERAL LIABILITY COVERAGE PART

SCHEDULE

Name Of Additional Insured Person(s) Or Organization(s)	Location(s) Of Covered Operations
AS REQUIRED BY WRITTEN CONTRACT	AS REQUIRED BY WRITTEN CONTRACT
Information required to complete this Schedule, if not shown above, will be shown in the Declarations.	

A. Section II – Who Is An Insured is amended to include as an additional insured the person(s) or organization(s) shown in the Schedule, but only with respect to liability for "bodily injury", "property damage" or "personal and advertising injury" caused, in whole or in part, by:

1. Your acts or omissions; or
2. The acts or omissions of those acting on your behalf;

in the performance of your ongoing operations for the additional insured(s) at the location(s) designated above.

However:

1. The insurance afforded to such additional insured only applies to the extent permitted by law; and
2. If coverage provided to the additional insured is required by a contract or agreement, the insurance afforded to such additional insured will not be broader than that which you are required by the contract or agreement to provide for such additional insured.

B. With respect to the insurance afforded to these additional insureds, the following additional exclusions apply:

This insurance does not apply to "bodily injury" or "property damage" occurring after:

1. All work, including materials, parts or equipment furnished in connection with such work, on the project (other than service, maintenance or repairs) to be performed by or on behalf of the additional insured(s) at the location of the covered operations has been completed; or
2. That portion of "your work" out of which the injury or damage arises has been put to its intended use by any person or organization other than another contractor or subcontractor engaged in performing operations for a principal as a part of the same project.

 © Insurance Services Office, Inc., 2012

C. With respect to the insurance afforded to these additional insureds, the following is added to **Section III – Limits Of Insurance:**

If coverage provided to the additional insured is required by a contract or agreement, the most we will pay on behalf of the additional insured is the amount of insurance:

1. Required by the contract or agreement; or

2. Available under the applicable Limits of Insurance shown in the Declarations;

whichever is less.

This endorsement shall not increase the applicable Limits of Insurance shown in the Declarations.

© Insurance Services Office, Inc., 2012

THIS ENDORSEMENT CHANGES THE POLICY. PLEASE READ IT CAREFULLY.

ADDITIONAL INSURED – OWNERS, LESSEES OR CONTRACTORS – COMPLETED OPERATIONS

This endorsement modifies insurance provided under the following:

COMMERCIAL GENERAL LIABILITY COVERAGE PART
PRODUCTS/COMPLETED OPERATIONS LIABILITY COVERAGE PART

SCHEDULE

Name Of Additional Insured Person(s) Or Organization(s)	Location And Description Of Completed Operations
AS REQUIRED BY WRITTEN CONTRACT	AS REQUIRED BY WRITTEN CONTRACT
Information required to complete this Schedule, if not shown above, will be shown in the Declarations.	

A. **Section II – Who Is An Insured** is amended to include as an additional insured the person(s) or organization(s) shown in the Schedule, but only with respect to liability for "bodily injury" or "property damage" caused, in whole or in part, by "your work" at the location designated and described in the Schedule of this endorsement performed for that additional insured and included in the "products-completed operations hazard".

However:

1. The insurance afforded to such additional insured only applies to the extent permitted by law; and
2. If coverage provided to the additional insured is required by a contract or agreement, the insurance afforded to such additional insured will not be broader than that which you are required by the contract or agreement to provide for such additional insured.

B. With respect to the insurance afforded to these additional insureds, the following is added to **Section III – Limits Of Insurance:**

If coverage provided to the additional insured is required by a contract or agreement, the most we will pay on behalf of the additional insured is the amount of insurance:

1. Required by the contract or agreement; or
2. Available under the applicable Limits of Insurance shown in the Declarations;

whichever is less.

This endorsement shall not increase the applicable Limits of Insurance shown in the Declarations.

© Insurance Services Office, Inc., 2012

CERTIFICATE OF LIABILITY INSURANCE

DATE (MM/DD/YYYY): 12/08/2017

THIS CERTIFICATE IS ISSUED AS A MATTER OF INFORMATION ONLY AND CONFERS NO RIGHTS UPON THE CERTIFICATE HOLDER. THIS CERTIFICATE DOES NOT AFFIRMATIVELY OR NEGATIVELY AMEND, EXTEND OR ALTER THE COVERAGE AFFORDED BY THE POLICIES BELOW. THIS CERTIFICATE OF INSURANCE DOES NOT CONSTITUTE A CONTRACT BETWEEN THE ISSUING INSURER(S), AUTHORIZED REPRESENTATIVE OR PRODUCER, AND THE CERTIFICATE HOLDER.

IMPORTANT: If the certificate holder is an ADDITIONAL INSURED, the policy(ies) must be endorsed. If SUBROGATION IS WAIVED, subject to the terms and conditions of the policy, certain policies may require an endorsement. A statement on this certificate does not confer rights to the certificate holder in lieu of such endorsement(s).

PRODUCER MIKE WINTER 10-33 JACKSON AVENUE LONG ISLAND CITY, NY 11101	CONTACT NAME: MIKE WINTER, AGENT PHONE (A/C, No, Ext): 718.707.0075 FAX (A/C, No): 718.707.0085 E-MAIL ADDRESS:
INSURED PERFETTO ENTERPRISES CO IN 2319 RICHMOND TER STATEN ISLAND NY 10302-1116	INSURER(S) AFFORDING COVERAGE — NAIC # INSURER A : State Farm Mutual Automobile Insurance Company — 25178 INSURER B : INSURER C : INSURER D : INSURER E : INSURER F :

COVERAGES **CERTIFICATE NUMBER:** **REVISION NUMBER:**

THIS IS TO CERTIFY THAT THE POLICIES OF INSURANCE LISTED BELOW HAVE BEEN ISSUED TO THE INSURED NAMED ABOVE FOR THE POLICY PERIOD INDICATED. NOTWITHSTANDING ANY REQUIREMENT, TERM OR CONDITION OF ANY CONTRACT OR OTHER DOCUMENT WITH RESPECT TO WHICH THIS CERTIFICATE MAY BE ISSUED OR MAY PERTAIN, THE INSURANCE AFFORDED BY THE POLICIES DESCRIBED HEREIN IS SUBJECT TO ALL THE TERMS, EXCLUSIONS AND CONDITIONS OF SUCH POLICIES. LIMITS SHOWN MAY HAVE BEEN REDUCED BY PAID CLAIMS.

INSR LTR	TYPE OF INSURANCE	ADDL INSR	SUBR WVD	POLICY NUMBER	POLICY EFF (MM/DD/YYYY)	POLICY EXP (MM/DD/YYYY)	LIMITS	
	GENERAL LIABILITY						EACH OCCURRENCE	$
	COMMERCIAL GENERAL LIABILITY						DAMAGE TO RENTED PREMISES (Ea occurrence)	$
	CLAIMS-MADE OCCUR						MED EXP (Any one person)	$
							PERSONAL & ADV INJURY	$
							GENERAL AGGREGATE	$
	GEN'L AGGREGATE LIMIT APPLIES PER:						PRODUCTS - COMP/OP AGG	$
	POLICY PRO-JECT LOC							$
A	AUTOMOBILE LIABILITY	Y		197-8542-c58-32	02/02/2017	02/02/2018	COMBINED SINGLE LIMIT (Ea accident)	$ 1,000,000
	ANY AUTO						BODILY INJURY (Per person)	$
	ALL OWNED AUTOS / SCHEDULED AUTOS (X)						BODILY INJURY (Per accident)	$
	HIRED AUTOS (X) / NON-OWNED AUTOS (X)						PROPERTY DAMAGE (Per accident)	$
								$
	UMBRELLA LIAB OCCUR						EACH OCCURRENCE	$
	EXCESS LIAB CLAIMS-MADE						AGGREGATE	$
	DED RETENTION $							$
	WORKERS COMPENSATION AND EMPLOYERS' LIABILITY Y/N						WC STATU-TORY LIMITS / OTH-ER	
	ANY PROPRIETOR/PARTNER/EXECUTIVE OFFICE/MEMBER EXCLUDED? N/A						E.L. EACH ACCIDENT	$
	(Mandatory in NH)						E.L. DISEASE - EA EMPLOYEE	$
	If yes, describe under DESCRIPTION OF OPERATIONS below						E.L. DISEASE - POLICY LIMIT	$

DESCRIPTION OF OPERATIONS / LOCATIONS / VEHICLES (Attach ACORD 101, Additional Remarks Schedule, if more space is required)

RE: FMS ID: SEK201BN7 E-PIN: 85018B0005001 DDC PIN: 8502017SE0023C RECONSTRUCTION OF COLLAPSED OR DEFECTIVE SANITARY, STORM OR COMBINED SEWERS VITRIED CLAY PIPE IN VARIOUS LOCATION, BROOKLYN

CERTIFICATE HOLDER

NEW YORK CITY DEPARTMENT OF DESIGN AND CONSTRUCTION
30-30 THOMSON AVE
LONG ISLAND CITY, NY 11101

CANCELLATION

SHOULD ANY OF THE ABOVE DESCRIBED POLICIES BE CANCELLED BEFORE THE EXPIRATION DATE THEREOF, NOTICE WILL BE DELIVERED IN ACCORDANCE WITH THE POLICY PROVISIONS.

AUTHORIZED REPRESENTATIVE
Ryan De Los Reyes
Digitally signed by Ryan De Los Reyes
DN: cn=Ryan De Los Reyes, o=State Farm Insurance, ou, email=ryan.delosreyes.dez7@statefarm.com, c=US
Date: 2014.04.03 13:01:29 -04'00'

© 1988-2010 ACORD CORPORATION. All rights reserved.

Project ID.: SEK201BN7

CITY OF NEW YORK

CERTIFICATION BY INSURANCE BROKER OR AGENT

The undersigned insurance broker represents to the City of New York that the attached Certificate of Insurance is accurate in all material respects.

State Farm Mike Winter Agency
[Name of broker or agent (typewritten)]

10-33 Jackson Ave LIC, NY 11101
[Address of broker or agent (typewritten)]

mikewinter@insurethecity.com
[Email address of broker or agent (typewritten)]

718-707-0075/718-707-0078
[Phone number/Fax number of broker or agent (typewritten)]

gestevez
[Signature of authorized official, broker, or agent]

customer Service
[Name and title of authorized official, broker, or agent (typewritten)]

State of New York)
) ss.:
County of New York)

Sworn to before me this 19 day of December, 2017

NOTARY PUBLIC FOR THE STATE OF New York

NOTARY PUBLIC-STATE OF NEW YORK
No. 01DI6248812
Qualified in New York County
My Commission Expires September 26, ~~2015~~ 2019

Project ID.: SEK201BN7

CITY OF NEW YORK

CERTIFICATION BY INSURANCE BROKER OR AGENT

The undersigned insurance broker represents to the City of New York that the attached Certificate of Insurance is accurate in all material respects.

USI Insurance Services, LLC
[Name of broker or agent (typewritten)]

300 Executive Drive, West Orange, NJ 07052
[Address of broker or agent (typewritten)]

katlen.yesse@usi.com
[Email address of broker or agent (typewritten)]

973-965-3166/610-537-4508
[Phone number/Fax number of broker or agent (typewritten)]

[Signature of authorized official, broker, or agent]

Andy Castle, Broker
[Name and title of authorized official, broker, or agent (typewritten)]

State of New Jersey .....)
) ss.:
County of Essex .....)

CATHY M. KNOKE
NOTARY PUBLIC
STATE OF NEW JERSEY
ID # 50009608
MY COMMISSION EXPIRES FEB. 4, 2020

Sworn to before me this 7th day of December, 2017

NOTARY PUBLIC FOR THE STATE OF New Jersey

New York State Insurance Fund

Workers' Compensation & Disability Benefits Specialists Since 1914

199 CHURCH STREET, NEW YORK, N.Y. 10007-1100

CERTIFICATE OF WORKERS' COMPENSATION INSURANCE

^^^^^^ 200602614
LOVELL SAFETY MANAGEMENT CO
110 WILLIAM ST 12TH FLOOR
NEW YORK NY 10038

Scan to Validate

POLICYHOLDER	CERTIFICATE HOLDER
PERFETTO ENTERPRISES COMPANY, INC 2074 RICHMOND TERRACE STATEN ISLAND NY 10302	NYC DEPARTMENT OF DESIGN & CONSTRUCTION 30-30 THOMSON AVENUE LONG ISLAND CITY NY 11101

POLICY NUMBER	CERTIFICATE NUMBER	POLICY PERIOD	DATE
V2389 454-6	412941	03/14/2017 TO 03/14/2018	4/24/2017

THIS IS TO CERTIFY THAT THE POLICYHOLDER NAMED ABOVE IS INSURED WITH THE NEW YORK STATE INSURANCE FUND UNDER POLICY NO. 2389 454-6, COVERING THE ENTIRE OBLIGATION OF THIS POLICYHOLDER FOR WORKERS' COMPENSATION UNDER THE NEW YORK WORKERS' COMPENSATION LAW WITH RESPECT TO ALL OPERATIONS IN THE STATE OF NEW YORK, EXCEPT AS INDICATED BELOW.

IF YOU WISH TO RECEIVE NOTIFICATIONS REGARDING SAID POLICY, INCLUDING ANY NOTIFICATION OF CANCELLATIONS, OR TO VALIDATE THIS CERTIFICATE, VISIT OUR WEBSITE AT HTTPS://WWW.NYSIF.COM/CERT/CERTVAL.ASP. THE NEW YORK STATE INSURANCE FUND IS NOT LIABLE IN THE EVENT OF FAILURE TO GIVE SUCH NOTIFICATIONS.

THIS CERTIFICATE IS ISSUED AS A MATTER OF INFORMATION ONLY AND CONFERS NO RIGHTS NOR INSURANCE COVERAGE UPON THE CERTIFICATE HOLDER. THIS CERTIFICATE DOES NOT AMEND, EXTEND OR ALTER THE COVERAGE AFFORDED BY THE POLICY.

NEW YORK STATE INSURANCE FUND

Sherwin Taylor

DIRECTOR,INSURANCE FUND UNDERWRITING

VALIDATION NUMBER: 1070646962

U-26.3

NEW YORK STATE | Workers' Compensation Board

CERTIFICATE OF INSURANCE COVERAGE UNDER THE NYS DISABILITY BENEFITS LAW

PART 1. To be completed by Disability Benefits Carrier or Licensed Insurance Agent of that Carrier

1a. Legal Name and Address of Insured (Use street address only)

PERFETTO ENTERPRISES COMPANY INC

2074 RICHMOND TERRACE
STATEN ISLAND, NY 10302

1b. Business Telephone Number of Insured

718-442-4212

1c. NYS Unemployment Insurance Employer Registration Number of Insured

1d. Federal Employer Identification Number of Insured or Social Security Number

200602614

2. Name and Address of the Entity requesting Proof of Coverage (Entity being listed as the Certificate Holder)

NYC Department of Design & Construction

30-30 Thomson Avenue

Long Island City, NY 11101

3a. Name of Insurance Carrier

ShelterPoint Life Insurance Company

3b. Policy Number of Entity listed in box "1a":

DBL479451

3c. Policy effective period:

01/01/2018 to 12/31/2018

4. Policy covers:

a. [X] All of the employer's employees eligible under the New York Disability Benefits Law

b. [ ] Only the following class or classes of the employer's employees:

Under penalty of perjury, I certify that I am an authorized representative or licensed agent of the insurance carrier referenced above and that the named insured has NYS Disability Benefits insurance coverage as described above.

Date Signed 1/8/2018 **By** _____

(Signature of insurance carrier's authorized representative or NYS Licensed Insurance Agent of that insurance carrier)

Telephone Number 516-829-8100 **Title** Chief Executive Officer

IMPORTANT: If box "4a" is checked, and this form is signed by the insurance carrier's authorized representative or NYS Licensed Insurance Agent of that carrier, this certificate is COMPLETE. Mail it directly to the certificate holder.
If box "4b" is checked, this certificate is NOT COMPLETE for the purposes of Section 220, Subd. 8 of the Disability Benefits Law. It must be mailed for completion to the Worker's Compensation Board, DB Plans Acceptance Unit, 328 State Street, Schenectady, NY 12305.

PART 2. To be completed by NYS Worker's Compensation Board (Only if box "4b" of Part 1 has been checked)

State of New York
Worker's Compensation Board

According to information maintained by the NYS Worker's Compensation Board, the above-named employer has complied with the NYS Disability Benefits Law with respect to all of his/her employees.

Date Signed _____ **By** _____

(Signature of NYS Worker's Compensation Board Employee)

Telephone Number _____ **Title** _____

Please Note: Only insurance carriers licensed to write NYS Disability Benefits insurance policies and NYS Licensed Insurance Agents of those insurance carriers are authorized to issue Form DB-120.1. Insurance brokers are NOT authorized to issue this form.

Additional Instructions for Form DB-120.1

By signing this form, the insurance carrier identified in box "3" on this form is certifying that it is insuring the business referenced in box "1a" for disability benefits under the New York State Disability Benefits Law. The Insurance Carrier or its licensed agent will send this Certificate of Insurance to the entity listed as the certificate holder in box "2".

Will the carrier notify the certificate holder within 10 days of a policy being cancelled for non-payment of premium or within 30 days if cancelled for any other reason or if the insured is otherwise eliminated from the coverage indicated on this certificate prior to the end of the policy effective period? ☐ YES ☒ NO

This certificate is issued as a matter of information only and confers no rights upon the certificate holder. This certificate does not amend, extend or alter the coverage afforded by the policy listed, nor does it confer any rights or responsibilities beyond those contained in the referenced policy.

This certificate may be used as evidence of a Disability Benefits contract of insurance only while the underlying policy is in effect.

Please Note: Upon the cancellation of the disability benefits policy indicated on this form, if the business continues to be named on a permit, license or contract issued by a certificate holder, the business must provide that certificate holder with a new Certificate of NYS Disability Benefits Coverage or other authorized proof that the business is complying with the mandatory coverage requirements of the New York State Disability Benefits Law.

DISABILITY BENEFITS LAW

§220. Subd. 8

(a) The head of a state or municipal department, board, commission or office authorized or required by law to issue any permit for or in connection with any work involving the employment of employees in employment as defined in this article, and not withstanding any general or special statute requiring or authorizing the issue of such permits, shall not issue such permit unless proof duly subscribed by an insurance carrier is produced in a form satisfactory to the chair, that the payment of disability benefits for all employees has been secured as provided by this article. Nothing herein, however, shall be construed as creating any liability on the part of such state or municipal department, board, commission or office to pay any disability benefits to any such employee if so employed.

(b) The head of a state or municipal department, board, commission or office authorized or required by law to enter into any contract for or in connection with any work involving the employment of employees in employment as defined in this article and notwithstanding any general or special statute requiring or authorizing any such contract, shall not enter into any such contract unless proof duly subscribed by an insurance carrier is produced in a form satisfactory to the chair, that the payment of disability benefits for all employees has been secured as provided by this article.

Performance Bond #2 (Pages 104 to 107): Use if the total contract price is more than $5 Million.

PERFORMANCE BOND #2

KNOW ALL PERSONS BY THESE PRESENTS:,
That we, _____

_____

_____

hereinafter referred to as the "Principal,"
and, _____

_____

_____

hereinafter referred to as the "Surety" ("Sureties") are held and firmly bound to THE CITY OF NEW YORK, hereinafter referred to as the "City" or to its successors and assigns in the penal sum
of _____

_____

_____

($_____) Dollars, lawful money of the United States for the payment of which said sum of money well and truly to be made, we, and each of us, bind ourselves, our heirs, executors, administrators, successors and assigns, jointly and severally, firmly by these presents.

WHEREAS, the Principal is about to enter, or has entered, into a Contract in writing with the City for

_____

_____

a copy of which Contract is annexed to and hereby made a part of this bond as though herein set forth in full;

NOW, THEREFORE, the conditions of this obligation are such that if the Principal, his or its representatives or assigns, shall well and faithfully perform the said Contract and all modifications, amendments, additions and alterations thereto that may hereafter be made, according to its terms and its true intent and meaning, including repair and or replacement of defective work and guarantees of maintenance for the periods stated in the Contract, and shall fully indemnify and save harmless the City from all cost and damage which it may suffer by reason of the Principal's default of the Contract, and shall fully reimburse and repay the City for all outlay and expense which the City may incur in making

Performance Bond #2 (Pages 104 to 107): Use if the total contract price is more than $5 Million.

good any such default and shall protect the said City of New York against, and pay any and all amounts, damages, cost and judgments which may or shall be recovered against said City or its officers or agents or which the said City of New York may be called upon to pay any person or corporation by reason of any damages arising or growing out of the Principal's default of the Contract, then this obligation shall be null and void, otherwise to remain in full force and effect.

The Surety (Sureties), for value received, hereby stipulates and agrees, upon written notice from the City that the City has determined that the Principal is in default of the Contract, to either (1) pay the full amount of the above penal sum in complete discharge and exoneration of this bond and of all the liabilities of the Surety relating to this bond, or (2) fully perform and complete the Work to be performed under the Contract, pursuant to the terms, conditions, and covenants thereof. The Surety (Sureties) further agrees, at its option, either to tender the penal sum or to commence and diligently perform the Work specified in the Contract, including physical site work, within twenty-five (25) business days after written notice thereof from the City and to complete all Work within the time set forth in the Contract or such other time as agreed to between the City and Surety in accordance with the Contract. The Surety and the City reserve all rights and defenses each may have against the other; provided, however, that the Surety expressly agrees that its reservation of rights shall not provide a basis for non-performance of its obligation to commence and to complete all Work as provided herein.

The Surety (Sureties), for value received, for itself and its successors and assigns, hereby stipulates and agrees that the obligation of said Surety (Sureties) and its bond shall be in no way impaired or affected by any extension of time, modification, omission, addition, or change in or to the said Contract or the Work to be performed thereunder, or by any payment thereunder before the time required therein, or by any waiver of any provisions thereof, or by any assignment, subletting or other transfer thereof or of any Work to be performed or any moneys due or to become due thereunder; and said Surety (Sureties) does hereby waive notice of any and all of such extensions, modifications, omissions, additions, changes, payments, waivers, assignments, subcontracts and transfers, and hereby expressly stipulates and agrees that any and all things done and omitted to be done by and in relation to assignees, subcontractors, and other transferees shall have the same effect as to said Surety (Sureties) as though done or omitted to be done by or in relation to said Principal.

Performance Bond #2 (Pages 104 to 107): Use if the total contract price is more than $5 Million.

IN WITNESS WHEREOF, The Principal and the Surety (Sureties) have hereunto set their hands and seals, and such of them as are corporations have caused their corporate seals to be hereunto affixed and these presents to be signed by their proper officers, this

_____ day of _____ 20 _____.

(Seal)

_____(L.S.)
Principal

By:_____.

(Seal)

Surety

By:_____.

_____.

(Seal)

Surety

By:_____.

_____.

(Seal)

Surety

By:_____.

_____.

(Seal)

Surety

By:_____.

(Seal)

Surety

By:_____.

Bond Premium Rate _____.

Bond Premium Cost _____.

If the Contractor (Principal) is a partnership, the bond should be signed by each of the individuals who are partners.

If the Contractor (Principal) is a corporation, the bond should be signed in its correct corporate name by a duly authorized officer, agent, or attorney-in-fact.

There should be executed an appropriate number of counterparts of the bond corresponding to the number of counterparts of the Contract.

Performance Bond #2 (Pages 104 to 107): Use if the total contract price is more than $5 Million.

ACKNOWLEDGMENT OF PRINCIPAL IF A CORPORATION

State of _____ County of _____ ss:

On this _____ day of _____, 20 _____ before me personally came _____,
to me known, who, being by me duly sworn did depose and say that he resides at _____
_____ ; that he/she is the _____
of the corporation described in and which executed the foregoing instrument; that he/she signed his/her name to the foregoing instrument by order of the directors of said corporation as the duly authorized and binding act thereof.

_____
Notary Public or Commissioner of Deeds.

ACKNOWLEDGMENT OF PRINCIPAL IF A PARTNERSHIP

State of _____ County of _____ ss:

On this _____ day of _____, 20 _____ before me personally came _____,
to me known, who, being by me duly sworn did depose and say that he/she resides at _____

_____; that he/she is _____ partner of _____, a limited/general partnership existing under the laws of the State of _____, the partnership described in and which executed the foregoing instrument; and that he/she signed his/her name to the foregoing instrument as the duly authorized and binding act of said partnership.

_____
Notary Public or Commissioner of Deeds

ACKNOWLEDGMENT OF PRINCIPAL IF AN INDIVIDUAL

State of _____ County of _____ ss:

On this _____ day of _____, 20_____ before me personally came _____,
to me known, who, being by me duly sworn did depose and say that he/she resides at _____
_____, and that he/she is the individual whose name is subscribed to the within instrument and acknowledged to me that by his/her signature on the instrument, said individual executed the instrument.

_____
Notary Public or Commissioner of Deeds

Each executed bond should be accompanied by: (a) appropriate acknowledgments of the respective parties; (b) appropriate duly certified copy of Power of Attorney or other certificate of authority where bond is executed by agent, officer or other representative of Principal or Surety; (c) a duly certified extract from By-Laws or resolutions of Surety under which Power of Attorney or other certificate of authority of its agent, officer or representative was issued, and (d) certified copy of latest published financial statement of assets and liabilities of Surety.

* * * * * * * *

Affix Acknowledgments and Justification of Sureties.

Payment Bond (Pages 108 to 111): Use for any contract for which a Payment Bond is required.

PAYMENT BOND

KNOW ALL PERSONS BY THESE PRESENTS, That we, _____

_____

_____

_____

hereinafter referred to as the "Principal", and _____

_____

_____

_____

_____

hereinafter referred to as the "Surety" ("Sureties") are held and firmly bound to THE CITY OF NEW YORK, hereinafter referred to as the "City" or to its successors and assigns, in the penal sum of

_____

_____

_____

($_____) Dollars, lawful money of the United States, for the payment of which said sum of money well and truly to be made, we, and each of us, bind ourselves, our heirs, executors, administrators, successors and assigns, jointly and severally, firmly by these presents.

WHEREAS, the Principal is about to enter, or has entered, into a Contract in writing with the City for

_____

_____

_____

a copy of which Contract is annexed to and hereby made a part of this bond as though herein set forth in full;

NOW, THEREFORE, the conditions of this obligation are such that if the Principal, his or its representatives or assigns and other Subcontractors to whom Work under this Contract is sublet and his or their successors and assigns shall promptly pay or cause to be paid all lawful claims for

(a) Wages and compensation for labor performed and services rendered by all persons engaged in the prosecution of the Work under said Contract, and any amendment or extension thereof or addition thereto, whether such persons be agents servants or employees of the Principal or any such Subcontractor, including all persons so engaged who perform the work of laborers or mechanics at or in the vicinity of the site

of the Project regardless of any contractual relationship between the Principal or such Subcontractors, or his or their successors or assigns, on the one hand and such laborers or mechanics on the other, but not including office employees not regularly stationed at the site of the project; and

(b) Materials and supplies (whether incorporated in the permanent structure or not), as well as teams, fuels, oils, implements or machinery furnished, used or consumed by said Principal or any subcontractor at or in the vicinity of the site of the Project in the prosecution of the Work under said Contract and any amendment or extension thereof or addition thereto; then this obligation shall be void, otherwise to remain in full force and effect.

This bond is subject to the following additional conditions, limitations and agreements:

(a) The Principal and Surety (Sureties) agree that this bond shall be for the benefit of any materialmen or laborer having a just claim, as well as the City itself.

(b) All persons who have performed labor, rendered services or furnished materials and supplies, as aforesaid, shall have a direct right of action against the Principal and his, its or their successors and assigns, and the Surety (Sureties) herein, or against either or both or any of them and their successors and assigns. Such persons may sue in their own name, and may prosecute the suit to judgment and execution without the necessity of joining with any other persons as party plaintiff.

(c) The Principal and Surety (Sureties) agree that neither of them will hold the City liable for any judgment for costs of otherwise, obtained by either or both of them against a laborer or materialman in a suit brought by either a laborer or materialman under this bond for moneys allegedly due for performing work or furnishing material.

(d) The Surety (Sureties) or its successors and assigns shall not be liable for any compensation recoverable by an employee or laborer under the Workmen's Compensation Law.

(e) In no event shall the Surety (Sureties), or its successors or assigns, be liable for a greater sum than the penalty of this bond or be subject to any suit, action or proceeding hereon that is instituted by any person, firm, or corporation hereunder later than two years after the complete performance of said Contract and final settlement thereof.

The Principal, for himself and his successors and assigns, and the Surety (Sureties), for itself and its successors and assigns, do hereby expressly waive any objection that might be interposed as to the right of the City to require a bond containing the foregoing provisions, and they do hereby further expressly waive any defense which they or either of them might interpose to an action brought hereon by any person, firm or corporation, including subcontractors, materialmen and third persons, for work, labor, services, supplies or material performed rendered, or furnished as aforesaid upon the ground that there is no law authorizing the City to require the foregoing provisions to be place in this bond.

And the Surety (Sureties), for value received, for itself and its successors and assigns, hereby stipulates and agrees that the obligation of said Surety (Sureties), and its bonds shall be in no way impaired or affected by any extension of time, modification, omission, addition, or change in or of the said Contract or the work to be performed thereunder, or by any payment thereunder before the time required therein, or by any waiver of any provisions thereof, or by any assignment, subletting or other transfer thereof or of any part thereof, or of any Work to be performed, or any moneys due to become due thereunder and said Surety (Sureties) does hereby waive notice of any and all of such extensions, modifications, omissions, additions, changes, payments, waivers, assignments, subcontracts and transfers, and hereby expressly stipulates and agrees that any and all things done and omitted to be done by and in relation to assignees, Subcontractors, and other transferees shall have the same effect as to said Surety (Sureties) as though done or omitted to be done or in relation to said Principal.

Payment Bond (Pages 108 to 111): Use for any contract for which a Payment Bond is required.

IN WITNESS WHEREOF, the Principal and the Surety (Sureties) have hereunto set their hands and seals, and such of them as are corporations have caused their corporate seals to be hereunto affixed and these presents to be signed by their proper officers, this _____ day of _____, _____.

(Seal) _____(L.S.)
Principal

By:_____

(Seal) _____
Surety

By:_____

(Seal) _____
Surety

By:_____

(Seal) _____
Surety

By:_____

(Seal) _____
Surety

By:_____

If the Contractor (Principal) is a partnership, the bond should be signed by each of the individuals who are partners.

If the Contractor (Principal) is a corporation, the bond should be signed in its correct corporate name by a duly authorized officer, agent, or attorney-in-fact.

There should be executed an appropriate number of counterparts of the bond corresponding to the number of counterparts of the Contract.

Payment Bond (Pages 108 to 111): Use for any contract for which a Payment Bond is required.

ACKNOWLEDGMENT OF PRINCIPAL, IF A CORPORATION

State of _____ County of _____ ss:

On this _____ day of _____, _____, before me personally came _____ to me known, who, being by me duly sworn did depose and say that he resides at _____ _____ that he is the _____ of the corporation described in and which executed the foregoing instrument; that he knows the seal of said corporation; that one of the seals affixed to said instrument is such seal; that it was so affixed by order of the directors of said corporation, and that he signed his name thereto by like order.

_____
Notary Public or Commissioner of Deeds

ACKNOWLEDGMENT OF PRINCIPAL, IF A PARTNERSHIP

State of _____ County of _____ ss:

On this _____ day of _____, _____, before me personally appeared _____ to me known, and known to me to be one of the members of the firm of _____ _____ described in and who executed the foregoing instrument; and he acknowledged to me that he executed the same as and for the act and deed of said firm.

_____
Notary Public or Commissioner of Deeds

ACKNOWLEDGMENT OF PRINCIPAL, IF AN INDIVIDUAL

State of _____ County of _____ ss:

On this _____ day of _____, _____, before me personally appeared _____ to me known, and known to me to be the person described in and who executed the foregoing instrument; and acknowledged that he executed the same.

_____
Notary Public or Commissioner of Deeds

Each executed bond should be accompanied by: (a) appropriate acknowledgments of the respective parties; (b) appropriate duly certified copy of Power of Attorney or other certificate of authority where bond is executed by agent, officer or other representative of Principal or Surety; (c) a duly certified extract from By-Laws or resolutions of Surety under which Power of Attorney or other certificate of authority of its agent, officer or representative was issued, and (d) certified copy of latest published financial statement of assets and liabilities of Surety.

* * * * * * * *

Affix Acknowledgments and Justification of Sureties.

(NO TEXT ON THIS PAGE)

LABOR LAW §220 PREVAILING WAGE SCHEDULE

Workers, Laborers and Mechanics employed on a public work project must receive not less than the prevailing rate of wage and benefits for the classification of work performed by each upon such public work. Pursuant to Labor Law §220 the Comptroller of the City of New York has promulgated this schedule solely for Workers, Laborers and Mechanics engaged by private contractors on New York City public work contracts.

This schedule is a compilation of separate determinations of the prevailing rate of wage and supplements made by the Comptroller for each trade classification listed herein pursuant to New York State Labor Law section 220 (5). The source of the wage and supplement rates, whether a collective bargaining agreement, survey data or other, is listed at the end of each classification.

Agency Chief Contracting Officers should contact the Bureau of Labor Law's Classification Unit with any questions concerning trade classifications, prevailing rates or prevailing practices with respect to procurement on New York City public works contracts. Contractors are advised to review the Comptroller's Prevailing Wage Schedule before bidding on public works contracts. Contractors with questions concerning trade classifications, prevailing rates or prevailing practices with respect to public works contracts in the procurement stage must contact the contracting agency responsible for the procurement.

Any error as to compensation under the prevailing wage law or other information as to trade classification, made by the contracting agency in the contract documents or in any other communication, will not preclude a finding against the contractor of prevailing wage violation.

Any questions concerning trade classifications, prevailing rates or prevailing practices on New York City public works contracts that have already been awarded may be directed to the Bureau of Labor Law's Classification Unit by calling (212) 669-4443. All callers must have the agency name and contract registration number available when calling with questions on public works contracts. Please direct all other compliance issues to: Bureau of Labor Law, Attn: Wasyl Kinach, P.E., Office of the Comptroller, 1 Centre Street, Room 651, New York, N.Y. 10007; Fax (212) 669-4002.

The appropriate schedule of prevailing wages and benefits must be posted at all public work sites pursuant to Labor Law §220 (3-a) (a).

This schedule is applicable to work performed during the effective period, unless otherwise noted. Changes to this schedule are published on our web site www.comptroller.nyc.gov. Contractors must pay the wages and supplements in effect when the worker, laborer, mechanic performs the work. Preliminary schedules for future one-year periods appear in the City Record on or about June 1 each succeeding year. Final schedules appear on or about July 1 in the City Record and on our web site www.comptroller.nyc.gov.

The Comptroller's Office has attempted to include all overtime, shift and night differential, Holiday, Saturday, Sunday or other premium time work. However, this schedule does not set forth every prevailing practice with respect to such rates with which employers must comply. All such practices are nevertheless part of the employer's prevailing wage obligation and contained in the collective bargaining agreements of the prevailing wage unions. These collective bargaining agreements are available for inspection by appointment. Requests for appointments may be made by calling (212) 669-4443, Monday through Friday between the hours of 9 a.m. and 5 p.m.

Prevailing rates and ratios for apprentices are attached to this schedule in the Appendix. Pursuant to Labor Law §220 (3-e), only apprentices who are individually registered in a bona fide program to which the employer contractor is a participant, registered with the New York State Department of Labor, may be employed on a public work project. Workers who are not journey persons or not registered apprentices pursuant to Labor Law §220 (3-e) may not be substituted for apprentices and must be paid as journey persons.

Public Work construction, reconstruction, demolition, excavation, rehabilitation, repair, renovation, alteration, or improvement contracts awarded pursuant to a Project Labor Agreement ("PLA") in accordance with Labor Law section 222 may have different labor standards for shift, premium and overtime work. Please refer to the PLA's pre-negotiated labor agreements for wage and benefit rates applicable to work performed outside of the regular workday. More information is available at the Mayor's Office of Contract Services (MOCS) web page at http://www.nyc.gov/html/mocs/html/vendors/pla.shtml.

All the provisions of Labor Law section 220 remain applicable to PLA work including, but not limited to, the enforcement of prevailing wage requirements by the Comptroller; however, we will enforce shift, premium, overtime and other non-standard rates as they appear in a project's pre-negotiated labor agreement.

In order to meet their obligation to provide prevailing supplemental benefits to each covered employee, employers must either:

1) Provide bona fide fringe benefits which cost the employer no less than the prevailing supplemental benefits rate; or
2) Supplement the employee's hourly wage by an amount no less than the prevailing supplemental benefits rate; or
3) Provide a combination of bona fide fringe benefits and wage supplements which cost the employer no less than the prevailing supplemental benefits rate in total.

Although prevailing wage laws do not require employers to provide bona fide fringe benefits (as opposed to wage supplements) to their employees, other laws may. For example, the Employee Retirement Income Security Act, 29 U.S.C. § 1001 et seq., the Patient Protection and Affordable Care Act, 42 U.S.C. § 18001 et seq., and the New York City Paid Sick Leave Law, N.Y.C. Admin. Code § 20-911 et seq., require certain employers to provide certain benefits to their employees. Labor agreements to which employers are a party may also require certain benefits. The Comptroller's Office does not enforce these laws or agreements.

Employers must provide prevailing supplemental benefits at the straight time rate for <u>each hour worked</u> unless otherwise noted in the classification.

Wasyl Kinach, P.E.
Director of Classifications
Bureau of Labor Law

TABLE OF CONTENTS

CLASSIFICATION	PAGE
ASBESTOS HANDLER	5
BLASTER	5
BOILERMAKER	7
BRICKLAYER	8
CARPENTER - BUILDING COMMERCIAL	9
CARPENTER - HEAVY CONSTRUCTION WORK	10
CARPENTER - HIGH RISE CONCRETE FORMS	11
CARPENTER - SIDEWALK SHED, SCAFFOLD AND HOIST	12
CEMENT & CONCRETE WORKER	13
CEMENT MASON	14
CORE DRILLER	15
DERRICKPERSON AND RIGGER	16
DIVER	17
DOCKBUILDER - PILE DRIVER	18
DRIVER: TRUCK (TEAMSTER)	19
ELECTRICIAN	21
ELECTRICIAN - ALARM TECHNICIAN	24
ELECTRICIAN-STREET LIGHTING WORKER	25
ELEVATOR CONSTRUCTOR	26
ELEVATOR REPAIR & MAINTENANCE	27
ENGINEER	28
ENGINEER - CITY SURVEYOR AND CONSULTANT	33
ENGINEER - FIELD (BUILDING CONSTRUCTION)	34
ENGINEER - FIELD (HEAVY CONSTRUCTION)	35
ENGINEER - FIELD (STEEL ERECTION)	36
ENGINEER - OPERATING	37
FLOOR COVERER	45
GLAZIER	46
GLAZIER - REPAIR & MAINTENANCE	47
HEAT AND FROST INSULATOR	48
HOUSE WRECKER	49
IRON WORKER - ORNAMENTAL	49
IRON WORKER - STRUCTURAL	50
LABORER	51
LANDSCAPING	52

MARBLE MECHANIC 54
MASON TENDER 55
MASON TENDER (INTERIOR DEMOLITION WORKER) 56
METALLIC LATHER 56
MILLWRIGHT 57
MOSAIC MECHANIC 58
PAINTER 59
PAINTER - METAL POLISHER 60
PAINTER - STRIPER 61
PAINTER - STRUCTURAL STEEL 62
PAPERHANGER 63
PAVER AND ROADBUILDER 64
PLASTERER 66
PLASTERER - TENDER 67
PLUMBER 67
PLUMBER (MECHNICAL EQUIPMENT AND SERVICE) 68
PLUMBER (RESIDENTIAL RATES FOR 1, 2 AND 3 FAMILY HOME CONSTRUCTION) 69
PLUMBER: PUMP & TANK 70
POINTER, WATERPROOFER, CAULKER, SANDBLASTER, STEAMBLASTER 71
ROOFER 72
SHEET METAL WORKER 72
SHEET METAL WORKER - SPECIALTY 73
SHIPYARD WORKER 74
SIGN ERECTOR 76
STEAMFITTER 76
STEAMFITTER - REFRIGERATION AND AIR CONDITIONER 78
STONE MASON - SETTER 80
TAPER 81
TELECOMMUNICATION WORKER 82
TILE FINISHER 83
TILE LAYER - SETTER 84
TIMBERPERSON 84
TUNNEL WORKER 85
WELDER 87

ASBESTOS HANDLER
(Hazardous Material; Disturbs, removes, encapsulates, repairs, or encloses friable asbestos material)

Asbestos Handler

Effective Period: 7/1/2017 - 6/30/2018
Wage Rate per Hour: $36.00
Supplemental Benefit Rate per Hour: $16.45

Overtime
Time and one half the regular rate after an 8 hour day.
Time and one half the regular rate for Sunday.
Time and one half the regular hourly rate after 40 hours in any work week.

Overtime Holidays
Time and one half the regular rate for work on the following holiday(s).
New Year's Day
Good Friday
Memorial Day
Independence Day
Labor Day
Thanksgiving Day
Christmas Day
Easter

Paid Holidays
None

(Local #78 and Local #12A)

BLASTER

Blaster

Effective Period: 7/1/2017 - 6/30/2018
Wage Rate per Hour: $46.27
Supplemental Benefit Rate per Hour: $47.99

Blaster (Hydraulic)

Effective Period: 7/1/2017 - 6/30/2018

Wage Rate per Hour: $47.15
Supplemental Benefit Rate per Hour: $47.99

Blaster - Trac Drill Hydraulic

Effective Period: 7/1/2017 - 6/30/2018
Wage Rate per Hour: $41.29
Supplemental Benefit Rate per Hour: $47.99

Blaster - Wagon: Air Trac: Quarry Bar: Drillrunners

Effective Period: 7/1/2017 - 6/30/2018
Wage Rate per Hour: $40.46
Supplemental Benefit Rate per Hour: $47.99

Blaster - Operators of Jack Hammers

Chippers: Spaders: Concrete Breakers: and all other pneumatic tools of like usage: Walk Behind Self Propelled Hydraulic Asphalt and Concrete Breakers: Hydro (Water) Demolition

Effective Period: 7/1/2017 - 6/30/2018
Wage Rate per Hour: $39.34
Supplemental Benefit Rate per Hour: $47.99

Blaster - Powder Carriers

Effective Period: 7/1/2017 - 6/30/2018
Wage Rate per Hour: $35.17
Supplemental Benefit Rate per Hour: $47.99

Blaster - Hydraulic Trac Drill Chuck Tender

Effective Period: 7/1/2017 - 6/30/2018
Wage Rate per Hour: $33.81
Supplemental Benefit Rate per Hour: $47.99

Blaster - Chuck Tender & Nipper

Effective Period: 7/1/2017 - 6/30/2018
Wage Rate per Hour: $33.00
Supplemental Benefit Rate per Hour: $47.99

Blaster - Magazine Keepers: (Watch Person)

Effective Period: 7/1/2017 - 6/30/2018
Wage Rate per Hour: $18.22
Supplemental Benefit Rate per Hour: $47.99

Overtime Description

Magazine Keepers:
Time and one half for work performed in excess of forty (40) hours per week and for work performed on Saturdays, Sundays and Holidays.

All Other Employees:
Time and one-half for the first two hours of overtime Monday through Friday, the first ten hours, the first ten hours of work on Saturday and for Make-up Time. Double time for all hours over ten Monday through Saturday (except make-up hours) and for all hours worked on Sunday and Holidays.

Overtime Holidays

Double time the regular rate for work on the following holiday(s).
New Year's Day
Memorial Day
Independence Day
Labor Day
Columbus Day
Thanksgiving Day
Christmas Day

Paid Holidays

None

Shift Rates

A single shift shall be 8 hours plus an unpaid lunch, starting at 8:00 A.M (or between 6:00 A.M. and 10:00 A.M. on weekdays). When two (2) shifts are employed, each shift shall be 8 hours plus ½ hour unpaid lunch. When three (3) shifts are employed, each shift will work seven and one-half (7 ½) hours, but will be paid for eight (8) hours, since only one-half (½) hour is allowed for mealtime. When two (2) or more shifts are employed, single time will be paid for each shift. The first 8 hours of any and all work performed Monday through Friday inclusive of any off-shift shall be at the single time rate.

(Local #29)

BOILERMAKER

Boilermaker

Effective Period: 7/1/2017 - 12/31/2017
Wage Rate per Hour: $55.23
Supplemental Benefit Rate per Hour: $42.96
Supplemental Note: For time and one half overtime - $63.82 For double overtime - $84.68

Effective Period: 1/1/2018 - 6/30/2018
Wage Rate per Hour: $57.17
Supplemental Benefit Rate per Hour: $43.62
Supplemental Note: For time and one half overtime - $64.81 For double overtime - $86.00

Overtime Description

For Repair and Maintenance work:
Time and one half the regular rate after an 8 hour day.
Time and one half the regular rate for Saturday.
Double time the regular rate for Sunday.
For New Construction work:
Double time the regular rate after an 8 hour day.
Double time the regular time rate for Saturday.
Double time the regular rate for Sunday.

Overtime Holidays

Double time the regular rate for work on the following holiday(s).
New Year's Day
President's Day
Memorial Day
Independence Day
Columbus Day
Election Day
Veteran's Day
Thanksgiving Day
Christmas Day

Quadruple time the regular rate for work on the following holiday(s).
Labor Day

Paid Holidays

Good Friday
Day after Thanksgiving
Day before Christmas
Day before New Year's Day

Shift Rates

When shifts are required, the first shift shall work eight (8) hours at the regular straight-time hourly rate. The second shift shall work seven and one-half (7 ½) hours and receive eight hours at the regular straight time hourly rate plus twenty-five cents ($0.25) per hour. The third shift shall work seven (7) hours and receive eight hours at the regular straight time hourly rate plus fifty cents ($0.50) per hour. A thirty (30) minute lunch period shall not be considered as time worked. Work in excess of the above shall be paid overtime at the appropriate new construction work or repair work overtime wage and supplemental benefit hourly rate.

(Local #5)

BRICKLAYER

Bricklayer

Effective Period: 7/1/2017 - 6/30/2018
Wage Rate per Hour: $55.10

Supplemental Benefit Rate per Hour: $31.20

Overtime
Time and one half the regular rate after a 7 hour day.
Time and one half the regular rate for Saturday.
Double time the regular rate for Sunday.
Saturday may be used as a make-up day at straight time when a day is lost during that week to inclement weather.

Overtime Holidays
Double time the regular rate for work on the following holiday(s).
New Year's Day
President's Day
Memorial Day
Independence Day
Labor Day
Thanksgiving Day
Christmas Day

Paid Holidays
None

Shift Rates
Overtime rates to be paid outside the regular scheduled work day.

(Bricklayer District Council)

CARPENTER - BUILDING COMMERCIAL

Building Commercial

Effective Period: 7/1/2017 - 6/30/2018
Wage Rate per Hour: $52.50
Supplemental Benefit Rate per Hour: $46.28

Overtime
Time and one half the regular rate after an 8 hour day.
Time and one half the regular rate for Saturday.
Double time the regular rate for Sunday.
Saturday may be used as a make-up day at straight time when a day is lost during that week to inclement weather.

Overtime Holidays
Double time the regular rate for work on the following holiday(s).
New Year's Day
Washington's Birthday

Memorial Day
Independence Day
Labor Day
Columbus Day
Presidential Election Day
Thanksgiving Day
Day after Thanksgiving
Christmas Day

Paid Holidays
None

Shift Rates
The second shift will receive one hour at the double time rate of pay for the last hour of the shift; eight hours pay for seven hours of work, nine hours pay for eight hours of work. There must be a first shift in order to work a second shift.

(Carpenters District Council)

CARPENTER - HEAVY CONSTRUCTION WORK
(Construction of Engineering Structures and Building Foundations)

Heavy Construction Work

Effective Period: 7/1/2017 - 6/30/2018
Wage Rate per Hour: $52.63
Supplemental Benefit Rate per Hour: $49.66

Overtime
Time and one half the regular rate after an 8 hour day.
Time and one half the regular rate for Saturday.
Double time the regular rate for Sunday.
Saturday may be used as a make-up day at straight time when a day is lost during that week to inclement weather.

Overtime Holidays
Double time the regular rate for work on the following holiday(s).
New Year's Day
President's Day
Memorial Day
Independence Day
Labor Day
Columbus Day
Presidential Election Day
Thanksgiving Day
Christmas Day

Paid Holidays
None

Shift Rates
Off shift work commencing between 5:00 P.M. and 11:00 P.M. shall work eight and one half hours allowing for one half hour for lunch. The wage rate shall be 113% of the straight time hourly wage rate.

(Carpenters District Council)

CARPENTER - HIGH RISE CONCRETE FORMS
(Excludes Engineering Structures and Building Foundations)

Carpenter High Rise A

Effective Period: 7/1/2017 - 6/30/2018
Wage Rate per Hour: $50.78
Supplemental Benefit Rate per Hour: $41.49

Carpenter High Rise B

Carpenter High Rise B worker is excluded from high risk operations such as erection decking, perimeter debris netting, leading edge work, self-climbing form systems, and the installation of cocoon systems unless directly supervised by a Carpenter High Rise A worker.

Effective Period: 7/1/2017 - 6/30/2018
Wage Rate per Hour: $39.07
Supplemental Benefit Rate per Hour: $16.65

Overtime
Time and one half the regular rate after an 8 hour day.
Time and one half the regular rate for Saturday.
Double time the regular rate for Sunday.
Saturday may be used as a make-up day at straight time when a day is lost during that week to inclement weather.

Overtime Holidays
Time and one half the regular rate for work on the following holiday(s).
New Year's Day
President's Day
Good Friday
Memorial Day
Independence Day
Labor Day
Columbus Day

Presidential Election Day
Thanksgiving Day
Christmas Day

Paid Holidays
None

Shift Rates
The second shift wage rate shall be 113% of the straight time hourly wage rate. There must be a first shift in order to work a second shift.

(Carpenters District Council)

CARPENTER - SIDEWALK SHED, SCAFFOLD AND HOIST

Carpenter - Hod Hoist

(Assisted by Mason Tender)

Effective Period: 7/1/2017 - 6/30/2018
Wage Rate per Hour: $50.50
Supplemental Benefit Rate per Hour: $39.46

Overtime
Time and one half the regular rate after an 8 hour day.
Time and one half the regular rate for Saturday.
Double time the regular rate for Sunday.
Saturday may be used as a make-up day at straight time when a day is lost during that week to inclement weather.

Overtime Holidays
Double time the regular rate for work on the following holiday(s).
New Year's Day
President's Day
Memorial Day
Independence Day
Labor Day
Columbus Day
Presidential Election Day
Thanksgiving Day
Day after Thanksgiving
Christmas Day

Paid Holidays
None

Shift Rates
The second shift will receive one hour at the double time rate of pay for the last hour of the shift; eight hours pay for seven hours of work, nine hours pay for eight hours of work. There must be a first shift in order to work a second shift.

(Carpenters District Council)

CEMENT & CONCRETE WORKER

Cement & Concrete Worker

Effective Period: 7/1/2017 - 6/30/2018
Wage Rate per Hour: $42.48
Supplemental Benefit Rate per Hour: $26.00
Supplemental Note: $29.50 on Saturdays; $33.00 on Sundays & Holidays

Cement & Concrete Worker - (Hired after 2/6/2016)

Effective Period: 7/1/2017 - 6/30/2018
Wage Rate per Hour: $32.00
Supplemental Benefit Rate per Hour: $18.00
Supplemental Note: $19.50 on Saturdays; $21.00 on Sundays & Holidays

Overtime Description
Time and one half the regular rate after 7 hour day (time and one half the regular rate after an 8 hour day when working with Dockbuilders on pile cap forms and for work below street level to the top of the foundation wall, not to exceed 2 feet or 3 feet above the sidewalk-brick shelf, when working on the foundation and structure.)

Overtime
Time and one half the regular rate for Saturday.
Double time the regular rate for Sunday.

Overtime Holidays
Double time the regular rate for work on the following holiday(s).
New Year's Day
President's Day
Good Friday
Memorial Day
Independence Day
Labor Day
Columbus Day
Presidential Election Day
Thanksgiving Day
Christmas Day

Paid Holidays

1/2 day before Christmas Day
1/2 day before New Year's Day

Shift Rates

On shift work extending over a twenty-four hour period, all shifts are paid at straight time.

(Cement Concrete Workers District Council)

CEMENT MASON

Cement Mason

Effective Period: 7/1/2017 - 6/30/2018
Wage Rate per Hour: $42.62
Supplemental Benefit Rate per Hour: $38.96
Supplemental Note: For time and one half overtime - $48.21; For double overtime - $57.46

Overtime Description

Time and one-half the regular rate after an 8 hour day, double time the regular rate after 10 hours. Time and one-half the regular rate on Saturday, double time the regular rate after 10 hours. Double time the regular rate on Sunday.

Overtime Holidays

Double time the regular rate for work on the following holiday(s).
New Year's Day
President's Day
Good Friday
Memorial Day
Independence Day
Labor Day
Columbus Day
Presidential Election Day
Thanksgiving Day
Christmas Day

Paid Holidays

Any worker who reports to work on Christmas Eve or New Year's Eve pursuant to his employer's instruction shall be entitled to three (3) hours afternoon pay without working.

Shift Rates

For an off shift day, (work at times other than the regular 7:00 A.M. to 3:30 P.M. work day) a cement mason shall be paid at the regular hourly rate plus a 25% per hour differential. Four Days a week at Ten (10)hour day.

(Local #780) (BCA)

CORE DRILLER

Core Driller

Effective Period: 7/1/2017 - 6/30/2018
Wage Rate per Hour: $38.82
Supplemental Benefit Rate per Hour: $24.66

Core Driller Helper

Effective Period: 7/1/2017 - 6/30/2018
Wage Rate per Hour: $30.96
Supplemental Benefit Rate per Hour: $24.66

Core Driller Helper(Third year in the industry)

Effective Period: 7/1/2017 - 6/30/2018
Wage Rate per Hour: $27.86
Supplemental Benefit Rate per Hour: $24.66

Core Driller Helper (Second year in the industry)

Effective Period: 7/1/2017 - 6/30/2018
Wage Rate per Hour: $24.77
Supplemental Benefit Rate per Hour: $24.66

Core Driller Helper (First year in the industry)

Effective Period: 7/1/2017 - 6/30/2018
Wage Rate per Hour: $21.67
Supplemental Benefit Rate per Hour: $24.66

Overtime Description
Time and one half the regular rate for work on a holiday plus Holiday pay when worked.

Overtime
Time and one half the regular rate after an 8 hour day.
Time and one half the regular rate for Saturday.
Double time the regular rate for Sunday.
Time and one half the regular rate for work on the following holiday(s).

Paid Holidays
New Year's Day
Memorial Day
Independence Day

Labor Day
Thanksgiving Day
Christmas Day

Shift Rates

The shift day shall be the continuous eight and one-half (8½) hours from 6:00 A.M. to 2:30 P.M. and from 2:30 P.M. to 11:00 P.M., including one-half (½) hour of employees regular rate of pay for lunch. When two (2) or more shifts are employed, single time shall be paid for each shift, but those employees employed on a shift other than from 8:00 A.M. to 5:00 P.M. shall, in addition, receive seventy-five cents ($0.75) per hour differential for each hour worked. When three (3) shifts are needed, each shift shall work seven and one-half (7 ½) hours paid for eight (8) hours of labor and be permitted one-half (½) hour for mealtime.

(Carpenters District Council)

DERRICKPERSON AND RIGGER

Derrick Person & Rigger

Effective Period: 7/1/2017 - 6/30/2018
Wage Rate per Hour: $46.86
Supplemental Benefit Rate per Hour: $51.40
Supplemental Note: The above supplemental rate applies for work performed in Manhattan, Bronx, Brooklyn and Queens. $52.82 - For work performed in Staten Island.

Derrick Person & Rigger - Site Work

Assists the Stone Mason-Setter in the setting of stone

Effective Period: 7/1/2017 - 6/30/2018
Wage Rate per Hour: $40.29
Supplemental Benefit Rate per Hour: $39.23

Overtime Description

The first two hours of overtime on weekdays and the first seven hours of work on Saturdays are paid at time and one half for wages and supplemental benefits. All additional overtimes is paid at double time for wages and supplemental benefits. Deduct $1.42 from the Staten Island hourly benefits rate before computing overtime.

Overtime

Double time the regular rate for Sunday.

Overtime Holidays

Double time the regular rate for work on the following holiday(s).
New Year's Day
Washington's Birthday
Good Friday
Memorial Day

Independence Day
Labor Day
Thanksgiving Day
Christmas Day

Paid Holidays
1/2 day on Christmas Eve if work is performed in the A.M.

(Local #197)

DIVER

Diver (Marine)

Effective Period: 7/1/2017 - 6/30/2018
Wage Rate per Hour: $66.66
Supplemental Benefit Rate per Hour: $49.66

Diver Tender (Marine)

Effective Period: 7/1/2017 - 6/30/2018
Wage Rate per Hour: $47.34
Supplemental Benefit Rate per Hour: $49.66

Overtime
Time and one half the regular rate after an 8 hour day.
Time and one half the regular rate for Saturday.
Double time the regular rate for Sunday.
Saturday may be used as a make-up day at straight time when a day is lost during that week to inclement weather.

Overtime Holidays
Double time the regular rate for work on the following holiday(s).
New Year's Day
President's Day
Memorial Day
Independence Day
Labor Day
Columbus Day
Presidential Election Day
Thanksgiving Day
Christmas Day

Paid Holidays
None

Shift Rates

When three shifts are utilized each shift shall work seven and one half-hours (7 1/2 hours) and paid for 8 hours, allowing for one half hour for lunch.

(Carpenters District Council)

DOCKBUILDER - PILE DRIVER

Dockbuilder - Pile Driver

Effective Period: 7/1/2017 - 6/30/2018
Wage Rate per Hour: $52.63
Supplemental Benefit Rate per Hour: $49.66

Overtime

Time and one half the regular rate after an 8 hour day.
Time and one half the regular rate for Saturday.
Double time the regular rate for Sunday.
Saturday may be used as a make-up day at straight time when a day is lost during that week to inclement weather.

Overtime Holidays

Double time the regular rate for work on the following holiday(s).
New Year's Day
President's Day
Memorial Day
Independence Day
Labor Day
Columbus Day
Presidential Election Day
Thanksgiving Day
Christmas Day

Paid Holidays

None

Shift Rates

Off shift work commencing between 5:00 P.M. and 11:00 P.M. shall work eight and one half hours allowing for one half hour for lunch. The wage rate shall be 113% of the straight time hourly wage rate.

(Carpenters District Council)

DRIVER: TRUCK (TEAMSTER)

Driver - Dump Truck

Effective Period: 7/1/2017 - 6/30/2018
Wage Rate per Hour: $41.18
Supplemental Benefit Rate per Hour: $44.79
Supplemental Note: Over 40 hours worked: at time and one half rate - $19.94; at double time rate - $26.58

Driver - Tractor Trailer

Effective Period: 7/1/2017 - 6/30/2018
Wage Rate per Hour: $42.22
Supplemental Benefit Rate per Hour: $45.40
Supplemental Note: Over 40 hours worked: at time and one half rate - $17.55; at double time rate - $23.40

Driver - Euclid & Turnapull Operator

Effective Period: 7/1/2017 - 6/30/2018
Wage Rate per Hour: $42.78
Supplemental Benefit Rate per Hour: $45.40
Supplemental Note: Over 40 hours worked: at time and one half rate - $17.55 at double time rate - $23.40

Overtime Description
For Paid Holidays: Holiday pay for all holidays shall be prorated based two hours per day for each day worked in the holiday week, not to exceed 8 hours of holiday pay. For Thanksgiving week, the prorated share shall be 5 1/3 hours of holiday pay for each day worked in Thanksgiving week.

Overtime
Time and one half the regular rate after an 8 hour day.
Time and one half the regular rate for Saturday.
Double time the regular rate for Sunday.

Overtime Holidays
Double time the regular rate for work on the following holiday(s).
New Year's Day
President's Day
Memorial Day
Independence Day
Labor Day
Columbus Day
Veteran's Day
Thanksgiving Day
Day after Thanksgiving
Christmas Day

Paid Holidays
New Year's Day
President's Day
Memorial Day

Independence Day
Labor Day
Columbus Day
Veteran's Day
Thanksgiving Day
Day after Thanksgiving
Christmas Day

Shift Rates

Off single shift work commencing between 6:00 P.M. and 5:00 A.M. shall work eight and one half hours allowing for one half hour for lunch and receive 9 hours pay for 8 hours of work.

Driver Redi-Mix (Sand & Gravel)

Effective Period: 7/1/2017 - 6/30/2018
Wage Rate per Hour: $38.40
Supplemental Benefit Rate per Hour: $42.12
Supplemental Note: Over 40 hours worked: time and one half rate $15.99, double time rate $21.33

Overtime Description

For Paid Holidays: Employees working two (2) days in the calendar week in which the holiday falls are to paid for these holidays, provided they shape each remaining workday during that calendar week.

Overtime

Time and one half the regular rate after an 8 hour day.
Time and one half the regular rate for Saturday.
Double time the regular rate for Sunday.

Overtime Holidays

Double time the regular rate for work on the following holiday(s).
President's Day
Columbus Day
Veteran's Day

Triple time the regular rate for work on the following holiday(s).
New Year's Day
Memorial Day
Independence Day
Labor Day
Thanksgiving Day
Christmas Day

Paid Holidays

New Year's Day
President's Day
Memorial Day
Independence Day
Labor Day
Columbus Day

Election Day
Thanksgiving Day
Christmas Day

(Local #282)

ELECTRICIAN

(Including all low voltage cabling carrying data; video; and voice in combination with data and or video.)

Electrician "A" (Regular Day / Day Shift)

Effective Period: 7/1/2017 - 5/9/2018
Wage Rate per Hour: $56.00
Supplemental Benefit Rate per Hour: $54.35

Effective Period: 5/10/2018 - 6/30/2018
Wage Rate per Hour: $56.00
Supplemental Benefit Rate per Hour: $55.72

Electrician "A" (Regular Day Overtime after 7 hrs / Day Shift Overtime after 8 hrs)

Effective Period: 7/1/2017 - 5/9/2018
Wage Rate per Hour: $84.00
Supplemental Benefit Rate per Hour: $57.86

Effective Period: 5/10/2018 - 6/30/2018
Wage Rate per Hour: $84.00
Supplemental Benefit Rate per Hour: $59.23

Electrician "A" (Swing Shift)

Effective Period: 7/1/2017 - 5/9/2018
Wage Rate per Hour: $65.71
Supplemental Benefit Rate per Hour: $61.94

Effective Period: 5/10/2018 - 6/30/2018
Wage Rate per Hour: $65.71
Supplemental Benefit Rate per Hour: $63.52

Electrician "A" (Swing Shift Overtime After 7.5 hours)

Effective Period: 7/1/2017 - 5/9/2018

Wage Rate per Hour: $98.57
Supplemental Benefit Rate per Hour: $66.05

Effective Period: 5/10/2018 - 6/30/2018
Wage Rate per Hour: $98.57
Supplemental Benefit Rate per Hour: $67.64

Electrician "A" (Graveyard Shift)

Effective Period: 7/1/2017 - 5/9/2018
Wage Rate per Hour: $73.60
Supplemental Benefit Rate per Hour: $68.33

Effective Period: 5/10/2018 - 6/30/2018
Wage Rate per Hour: $73.60
Supplemental Benefit Rate per Hour: $70.09

Electrician "A" (Graveyard Shift Overtime After 7 hours)

Effective Period: 7/1/2017 - 5/9/2018
Wage Rate per Hour: $110.40
Supplemental Benefit Rate per Hour: $72.95

Effective Period: 5/10/2018 - 6/30/2018
Wage Rate per Hour: $110.40
Supplemental Benefit Rate per Hour: $74.70

Overtime
Time and one half the regular rate after a 7 hour day.
Time and one half the regular rate for Saturday.
Time and one half the regular rate for Sunday.

Overtime Holidays
Time and one half the regular rate for work on a holiday.
New Year's Day
Martin Luther King Jr. Day
President's Day
Memorial Day
Independence Day
Labor Day
Columbus Day
Veteran's Day
Thanksgiving Day
Day after Thanksgiving
Christmas Day

Paid Holidays
None

Shift Rates

When so elected by the Employer, one or more shifts of at least five days duration may be scheduled as follows: Day Shift: 8:00 am to 4:30 pm, Swing Shift 4:30 pm to 12:30 am, Graveyard Shift: 12:30 am to 8:00 am.

For multiple shifts of temporary light and/or power, the temporary light and/or power employee shall be paid for 8 hours at the straight time rate. For three or less workers performing 8 hours temporary light and/or power the supplemental benefit rate is $25.67 and effective 5/10/18 $25.92.

Electrician "M" (First 8 hours)

"M" rated work shall be defined as jobbing: electrical work of limited duration and scope, also consisting of repairs and/or replacement of electrical and tele-data equipment. Includes all work necessary to retrofit, service, maintain and repair all kinds of lighting fixtures and local lighting controls and washing and cleaning of foregoing fixtures.

Effective Period: 7/1/2017 - 5/9/2018
Wage Rate per Hour: $28.50
Supplemental Benefit Rate per Hour: $22.10
First and Second Year "M" Wage Rate Per Hour: $24.00
First and Second Year "M" Supplemental Rate: $19.80

Effective Period: 5/10/2018 - 6/30/2018
Wage Rate per Hour: $29.00
Supplemental Benefit Rate per Hour: $22.65
First and Second Year "M" Wage Rate Per Hour: $24.50
First and Second Year "M" Supplemental Rate: $20.30

Electrician "M" (Overtime After First 8 hours)

"M" rated work shall be defined as jobbing: electrical work of limited duration and scope, also consisting of repairs and/or replacement of electrical and tele-data equipment. Includes all work necessary to retrofit, service, maintain and repair all kinds of lighting fixtures and local lighting controls and washing and cleaning of foregoing fixtures.

Effective Period: 7/1/2017 - 5/9/2018
Wage Rate per Hour: $42.75
Supplemental Benefit Rate per Hour: $23.89
First and Second Year "M" Wage Rate Per Hour: $36.00
First and Second Year "M" Supplemental Rate: $21.30

Effective Period: 5/10/2018 - 6/30/2018
Wage Rate per Hour: $43.50
Supplemental Benefit Rate per Hour: $24.47
First and Second Year "M" Wage Rate Per Hour: $36.75
First and Second Year "M" Supplemental Rate: $21.84

Overtime

Time and one half the regular rate after an 8 hour day.
Time and one half the regular rate for Saturday.
Time and one half the regular rate for Sunday.

Overtime Holidays
Time and one half the regular rate for work on the following holiday(s).
New Year's Day
Martin Luther King Jr. Day
President's Day
Memorial Day
Independence Day
Labor Day
Columbus Day
Veteran's Day
Thanksgiving Day
Day after Thanksgiving
Christmas Day

Paid Holidays
None

(Local #3)

ELECTRICIAN - ALARM TECHNICIAN
(Scope of Work - Inspect, test, repair, and replace defective, malfunctioning, or broken devices, components and controls of Fire, Burglar and Security Systems)

Alarm Technician

Effective Period: 7/1/2017 - 6/30/2018
Wage Rate per Hour: $32.40
Supplemental Benefit Rate per Hour: $16.10
Supplemental Note: $14.60 only after 8 hours worked in a day

Overtime Description
Time and one half the regular rate for work on the following holidays: Columbus Day, Veterans Day, Day after Thanksgiving.
Double time the regular rate for work on the following holidays: New Year's day, Martin Luther King Jr. Day, President's Day, Memorial Day, Independence Day, Labor Day, Thanksgiving Day, Christmas Day.

Overtime
Time and one half the regular rate after an 8 hour day.
Time and one half the regular rate for Saturday.
Double time the regular rate for Sunday.

Paid Holidays
New Year's Day

Martin Luther King Jr. Day
President's Day
Memorial Day
Independence Day
Labor Day
Columbus Day
Veteran's Day
Thanksgiving Day
Day after Thanksgiving
Christmas Day

Shift Rates

Night Differential is based upon a ten percent (10%) differential between the hours of 4:00 P.M. and 12:30 A.M. and a fifteen percent (15%) differential for the hours 12:00 A.M. to 8:00 A.M.

Vacation

At least 1 year of employment.....ten (10) days
5 years or more of employment.....fifteen (15) days
10 years of employment.....twenty (20) days
Plus one Personal Day per year

Sick Days:
One day per Year. Up to 4 vacation days may be used as sick days.

(Local #3)

ELECTRICIAN-STREET LIGHTING WORKER

Electrician - Electro Pole Electrician

Effective Period: 7/1/2017 - 5/15/2018
Wage Rate per Hour: $56.00
Supplemental Benefit Rate per Hour: $56.26

Effective Period: 5/16/2018 - 6/30/2018
Wage Rate per Hour: $56.00
Supplemental Benefit Rate per Hour: $57.63

Electrician - Electro Pole Foundation Installer

Effective Period: 7/1/2017 - 5/15/2018
Wage Rate per Hour: $41.54
Supplemental Benefit Rate per Hour: $41.02

Effective Period: 5/16/2018 - 6/30/2018
Wage Rate per Hour: $42.16
Supplemental Benefit Rate per Hour: $42.19

Electrician - Electro Pole Maintainer

Effective Period: 7/1/2017 - 5/16/2018
Wage Rate per Hour: $35.58
Supplemental Benefit Rate per Hour: $36.89

Effective Period: 5/17/2018 - 6/30/2018
Wage Rate per Hour: $36.11
Supplemental Benefit Rate per Hour: $37.93

Overtime Description

Electrician - Electro Pole Electrician: Time and one half the regular rate after a 7 hour day and after 5 consecutive days worked per week.
Electrician - Electro Pole Foundation Installer: Time and one half the regular rate after 8 hours within a 24 hour period and Saturday and Sunday.
Electrician - Electro Pole Maintainer: Time and one half the regular rate after a 7 hour day and after 5 consecutive days worked per week. Saturdays and Sundays may be used as a make-up day at straight time when a day is lost during the week to inclement weather.

Overtime Holidays

Time and one half the regular rate for work on the following holiday(s).
New Year's Day
Martin Luther King Jr. Day
President's Day
Memorial Day
Independence Day
Labor Day
Columbus Day
Veteran's Day
Thanksgiving Day
Day after Thanksgiving
Christmas Day

Paid Holidays

None

(Local #3)

ELEVATOR CONSTRUCTOR

Elevator Constructor

Effective Period: 7/1/2017 - 3/16/2018
Wage Rate per Hour: $62.64
Supplemental Benefit Rate per Hour: $34.25

Effective Period: 3/17/2018 - 6/30/2018
Wage Rate per Hour: $64.48
Supplemental Benefit Rate per Hour: $35.85

Overtime Description
For New Construction: work performed after 7 or 8 hour day, Saturday, Sunday or between 4:30pm and 7:00am shall be paid at double time rate.

Existing buildings: work performed after an 8 hour day, Saturday, Sunday or between 5:30pm and 7:00 am shall be paid time and one half.

Overtime
Double time the regular rate for work on the following holiday(s).

Paid Holidays
New Year's Day
President's Day
Good Friday
Memorial Day
Independence Day
Labor Day
Columbus Day
Veteran's Day
Thanksgiving Day
Day after Thanksgiving
Christmas Day

Vacation
Employer contributes 8% of regular basic hourly rate as vacation pay for employees with more than 15 years of service, and 6% for employees with 5 to 15 years of service, and 4% for employees with less than 5 years of service.

(Local #1)

ELEVATOR REPAIR & MAINTENANCE

Elevator Service/Modernization Mechanic

Effective Period: 7/1/2017 - 3/16/2018
Wage Rate per Hour: $49.14
Supplemental Benefit Rate per Hour: $34.11

Effective Period: 3/17/2018 - 6/30/2018
Wage Rate per Hour: $50.49
Supplemental Benefit Rate per Hour: $35.71

Overtime Description
For Scheduled Service Work: Double time - work scheduled in advance by two or more workers performed on Sundays, Holidays, and between midnight and 7:00am.

Overtime
Time and one half the regular rate after an 8 hour day.
Time and one half the regular rate for Saturday.
Time and one half the regular rate for Sunday.
Time and one half the regular rate for work on a holiday plus the day's pay.

Paid Holidays
New Year's Day
President's Day
Good Friday
Memorial Day
Independence Day
Labor Day
Columbus Day
Veteran's Day
Thanksgiving Day
Day after Thanksgiving
Christmas Day

Shift Rates
Afternoon shift - regularly hourly rate plus a (15%) fifteen percent differential. Graveyard shift - time and one half the regular rate.

Vacation
Employer contributes 8% of regular basic hourly rate as vacation pay for employees with more than 15 years of service, and 6% for employees with 5 to 15 years of service, and 4% for employees with less than 5 years of service.

(Local #1)

ENGINEER

Engineer - Heavy Construction Operating Engineer I

Cherrypickers 20 tons and over and Loaders (rubber tired and/or tractor type with a manufacturer's minimum rated capacity of six cubic yards and over).

Effective Period: 7/1/2017 - 6/30/2018
Wage Rate per Hour: $67.32
Supplemental Benefit Rate per Hour: $36.87
Supplemental Note: $66.34 on overtime
Shift Wage Rate: $107.71

Engineer - Heavy Construction Operating Engineer II

Backhoes, Basin Machines, Groover, Mechanical Sweepers, Bobcat, Boom Truck, Barrier Transport (Barrier Mover) & machines of similar nature. Operation of Churn Drills and machines of a similar nature, Stetco Silent Hoist and machines of similar nature, Vac-Alls, Meyers Machines, John Beam and machines of a similar nature, Ross Carriers and Travel Lifts and machines of a similar nature, Bulldozers, Scrapers and Turn-a-Pulls: Tugger Hoists (Used exclusively for handling excavated material); Tractors with attachments, Hyster and Roustabout Cranes, Cherrypickers. Austin Western, Grove and machines of a similar nature, Scoopmobiles, Monorails, Conveyors, Trenchers: Loaders-Rubber Tired and Tractor: Barber Greene and Eimco Loaders and Eimco Backhoes; Mighty Midget and similar breakers and Tampers, Curb and Gutter Pavers and Motor Patrol, Motor Graders and all machines of a similar nature. Locomotives 10 Tons or under. Mini-Max, Break-Tech and machines of a similar nature; Milling machines, robotic and demolition machines and machines of a similar nature, shot blaster, skid steer machines and machines of a similar nature including bobcat, pile rig rubber-tired excavator (37,000 lbs. and under), 2 man auger.

Effective Period: 7/1/2017 - 6/30/2018
Wage Rate per Hour: $65.31
Supplemental Benefit Rate per Hour: $36.87
Supplemental Note: $66.34 on overtime
Shift Wage Rate: $104.50

Engineer - Heavy Construction Operating Engineer III

Minor Equipment such as Tractors, Post Hole Diggers, Ditch Witch (Walk Behind), Road Finishing Machines, Rollers five tons and under, Tugger Hoists, Dual Purpose Trucks, Fork Lifts, and Dempsey Dumpers, Fireperson.

Effective Period: 7/1/2017 - 6/30/2018
Wage Rate per Hour: $61.93
Supplemental Benefit Rate per Hour: $36.87
Supplemental Note: $66.34 on overtime
Shift Wage Rate: $99.09

Engineer - Heavy Construction Maintenance Engineer I

Installing, Repairing, Maintaining, Dismantling and Manning of all equipment including Steel Cutting, Bending and Heat Sealing Machines, Mechanical Heaters, Grout Pumps, Bentonite Pumps & Plants, Screening Machines, Fusion Coupling Machines, Tunnel Boring Machines Moles and Machines of a similar nature, Power Packs, Mechanical Hydraulic Jacks; all drill rigs including but not limited to Churn, Rotary Caisson, Raised Bore & Drills of a similar nature; Personnel, Inspection & Safety Boats or any boats used to perform functions of same, Mine Hoists, Whirlies, all Climbing Cranes, all Tower Cranes, including but not limited to Truck Mounted and Crawler Type and machines of similar nature; Maintaining Hydraulic Drills and machines of a similar nature; Well Point System-Installation and dismantling; Burning, Welding, all Pumps regardless of size and/or motor power, except River Cofferdam Pumps and Wells Point Pumps; Motorized Buggies (three or more); equipment used in the cleaning and televising of sewers, but not limited to jet-rodder/vacuum truck, vacall/vactor, closed circuit television inspection equipment; high powered water pumps, jet pumps; screed machines and concrete finishing machines of a similar nature; vermeers.

Effective Period: 7/1/2017 - 6/30/2018
Wage Rate per Hour: $65.00
Supplemental Benefit Rate per Hour: $36.87
Supplemental Note: $66.34 on overtime
Shift Wage Rate: $104.00

Engineer - Heavy Construction Maintenance Engineer II

On Base Mounted Tower Cranes

Effective Period: 7/1/2017 - 6/30/2018
Wage Rate per Hour: $85.53
Supplemental Benefit Rate per Hour: $36.87
Supplemental Note: $66.34 on overtime
Shift Wage Rate: $136.85

Engineer - Heavy Construction Maintenance Engineer III

On Generators, Light Towers

Effective Period: 7/1/2017 - 6/30/2018
Wage Rate per Hour: $42.73
Supplemental Benefit Rate per Hour: $36.87
Supplemental Note: $66.34 on overtime
Shift Wage Rate: $68.37

Engineer - Heavy Construction Maintenance Engineer IV

On Pumps and Mixers including mud sucking

Effective Period: 7/1/2017 - 6/30/2018
Wage Rate per Hour: $43.86
Supplemental Benefit Rate per Hour: $36.87
Supplemental Note: $66.34 on overtime
Shift Wage Rate: $70.18

Engineer - Heavy Construction Oilers I

Gradalls, Cold Planer Grader, Concrete Pumps, Driving Truck Cranes, Driving and Operating Fuel and Grease Trucks.

Effective Period: 7/1/2017 - 6/30/2018
Wage Rate per Hour: $58.57
Supplemental Benefit Rate per Hour: $36.87
Supplemental Note: $66.34 on overtime
Shift Wage Rate: $93.71

Engineer - Heavy Construction Oilers II

All gasoline, electric, diesel or air operated Shovels, Draglines, Backhoes, Keystones, Pavers, Gunite Machines, Battery of Compressors, Crawler Cranes, two-person Trenching Machines.

Effective Period: 7/1/2017 - 6/30/2018
Wage Rate per Hour: $40.36
Supplemental Benefit Rate per Hour: $36.87

Supplemental Note: $66.34 on overtime
Shift Wage Rate: $64.58

Engineer - Steel Erection Maintenance Engineers

Derrick, Travelers, Tower, Crawler Tower and Climbing Cranes

Effective Period: 7/1/2017 - 6/30/2018
Wage Rate per Hour: $61.13
Supplemental Benefit Rate per Hour: $35.41
Supplemental Note: $63.67 on overtime
Shift Wage Rate: $97.81

Engineer - Steel Erection Oiler I

On a Truck Crane

Effective Period: 7/1/2017 - 6/30/2018
Wage Rate per Hour: $57.21
Supplemental Benefit Rate per Hour: $35.41
Supplemental Note: $63.67 on overtime
Shift Wage Rate: $91.54

Engineer - Steel Erection Oiler II

On a Crawler Crane

Effective Period: 7/1/2017 - 6/30/2018
Wage Rate per Hour: $43.54
Supplemental Benefit Rate per Hour: $35.41
Supplemental Note: $63.67 on overtime
Shift Wage Rate: $69.66

Overtime Description

On jobs of more than one shift, if the next shift employee fails to report for work through any cause over which the employer has no control, the employee on duty who works the next shift continues to work at the single time rate.

Overtime

Double time the regular rate after an 8 hour day.
Double time the regular time rate for Saturday.
Double time the regular rate for Sunday.
Double time the regular rate for work on the following holiday(s).

Paid Holidays

New Year's Day
Lincoln's Birthday
President's Day
Memorial Day
Independence Day

Labor Day
Columbus Day
Veteran's Day
Thanksgiving Day
Day after Thanksgiving
Christmas Day
Employees must work at least one day in the payroll week in which the holiday occurs to receive the paid holiday

---

Engineer - Building Work Maintenance Engineers I

Installing, repairing, maintaining, dismantling (of all equipment including: Steel Cutting and Bending Machines, Mechanical Heaters, Mine Hoists, Climbing Cranes, Tower Cranes, Linden Peine, Lorain, Liebherr, Mannes, or machines of a similar nature, Well Point Systems, Deep Well Pumps, Concrete Mixers with loading Device, Concrete Plants, Motor Generators when used for temporary power and lights), skid steer machines of a similar nature including bobcat.

Effective Period: 7/1/2017 - 6/30/2018
Wage Rate per Hour: $58.30
Supplemental Benefit Rate per Hour: $35.41
Supplemental Note: $63.67 on overtime

Engineer - Building Work Maintenance Engineers II

On Pumps, Generators, Mixers and Heaters

Effective Period: 7/1/2017 - 6/30/2018
Wage Rate per Hour: $45.28
Supplemental Benefit Rate per Hour: $35.41
Supplemental Note: $63.67 on overtime

Engineer - Building Work Oilers I

All gasoline, electric, diesel or air operated Gradealls: Concrete Pumps, Overhead Cranes in Power Houses: Their duties shall be to assist the Engineer in oiling, greasing and repairing of all machines; Driving Truck Cranes: Driving and Operating Fuel and Grease Trucks, Cherrypickers (hydraulic cranes) over 70,000 GVW, and machines of a similar nature.

Effective Period: 7/1/2017 - 6/30/2018
Wage Rate per Hour: $55.42
Supplemental Benefit Rate per Hour: $35.41
Supplemental Note: $63.67 on overtime

Engineer - Building Work Oilers II

Oilers on Crawler Cranes, Backhoes, Trenching Machines, Gunite Machines, Compressors (three or more in Battery).

Effective Period: 7/1/2017 - 6/30/2018

Wage Rate per Hour: $41.16
Supplemental Benefit Rate per Hour: $35.41
Supplemental Note: $63.67 on overtime

Overtime Description
On jobs of more than one shift, if an Employee fails to report for work through any cause over which the Employer has no control, the Employee on duty will continue to work at the rate of single time.

Overtime
Double time the regular rate after an 8 hour day.
Double time the regular time rate for Saturday.
Double time the regular rate for Sunday.
Double time the regular rate for work on the following holiday(s).

Paid Holidays
New Year's Day
Lincoln's Birthday
President's Day
Memorial Day
Independence Day
Labor Day
Columbus Day
Veteran's Day
Thanksgiving Day
Christmas Day
Employees must work at least one day in the payroll week in which the holiday occurs to receive the paid holiday

Shift Rates
Off Shift: double time the regular hourly rate.

(Local #15)

ENGINEER - CITY SURVEYOR AND CONSULTANT

Party Chief

Effective Period: 7/1/2017 - 6/30/2018
Wage Rate per Hour: $38.18
Supplemental Benefit Rate per Hour: $20.15
Supplemental Note: Overtime Benefit Rate - $27.65 per hour (time & one half) $35.15 per hour (double time).

Instrument Person

Effective Period: 7/1/2017 - 6/30/2018
Wage Rate per Hour: $31.47
Supplemental Benefit Rate per Hour: $20.15

Supplemental Note: Overtime Benefit Rate - $27.65 per hour (time & one half) $35.15 per hour (double time).

Rodperson

Effective Period: 7/1/2017 - 6/30/2018
Wage Rate per Hour: $27.24
Supplemental Benefit Rate per Hour: $20.15
Supplemental Note: Overtime Benefit Rate - $27.65 per hour (time & one half) $35.15 per hour (double time).

Overtime Description
Time and one half the regular rate after an 8 hour day, Time and one half the regular rate for Saturday for the first eight hours worked, Double time the regular time rate for Saturday for work performed in excess of eight hours, Double time the regular rate for Sunday and Double time the regular rate for work on a holiday.

Paid Holidays
New Year's Day
Lincoln's Birthday
President's Day
Memorial Day
Independence Day
Labor Day
Columbus Day
Veteran's Day
Thanksgiving Day
Day after Thanksgiving
Christmas Day
Employees must work at least one day in the payroll week in which the holiday occurs to receive the paid holiday

(Operating Engineer Local #15-D)

ENGINEER - FIELD (BUILDING CONSTRUCTION)
(Construction of Building Projects, Concrete Superstructures, etc.)

Field Engineer - BC Party Chief

Effective Period: 7/1/2017 - 6/30/2018
Wage Rate per Hour: $60.10
Supplemental Benefit Rate per Hour: $32.15
Supplemental Note: Overtime Benefit Rate - $44.90 per hour (time & one half) $57.65 per hour (double time).

Field Engineer - BC Instrument Person

Effective Period: 7/1/2017 - 6/30/2018
Wage Rate per Hour: $46.69
Supplemental Benefit Rate per Hour: $32.15

Supplemental Note: Overtime Benefit Rate - $44.90 per hour (time & one half) $57.65 per hour (double time).

Field Engineer - BC Rodperson

Effective Period: 7/1/2017 - 6/30/2018
Wage Rate per Hour: $30.20
Supplemental Benefit Rate per Hour: $32.15
Supplemental Note: Overtime Benefit Rate - $44.90 per hour (time & one half) $57.65 per hour (double time).

Overtime Description
Time and one half the regular rate after a 7 hour work and time and one half the regular rate for Saturday for the first seven hours worked, Double time the regular time rate for Saturday for work performed in excess of seven hours, Double time the regular rate for Sunday and Double time the regular rate for work on a holiday.

Paid Holidays
New Year's Day
President's Day
Good Friday
Memorial Day
Independence Day
Labor Day
Columbus Day
Veteran's Day
Thanksgiving Day
Christmas Day
Employees must work at least one day in the payroll week in which the holiday occurs to receive the paid holiday

(Operating Engineer Local #15-D)

ENGINEER - FIELD (HEAVY CONSTRUCTION)
(Construction of Roads, Tunnels, Bridges, Sewers, Building Foundations, Engineering Structures etc.)

Field Engineer - HC Party Chief

Effective Period: 7/1/2017 - 6/30/2018
Wage Rate per Hour: $70.25
Supplemental Benefit Rate per Hour: $34.18
Supplemental Note: Overtime benefit rate - $47.82 per hour (time & one half), $61.46 per hour (double time).

Field Engineer - HC Instrument Person

Effective Period: 7/1/2017 - 6/30/2018
Wage Rate per Hour: $51.64

Supplemental Benefit Rate per Hour: $34.18
Supplemental Note: Overtime benefit rate - $47.82 per hour (time & one half), $61.46 per hour (double time).

Field Engineer - HC Rodperson

Effective Period: 7/1/2017 - 6/30/2018
Wage Rate per Hour: $43.37
Supplemental Benefit Rate per Hour: $34.18
Supplemental Note: Overtime benefit rate - $47.82 per hour (time & one half), $61.46 per hour (double time).

Overtime Description
Time and one half the regular rate after an 8 hour day, Time and one half the regular rate for Saturday for the first eight hours worked, Double time the regular time rate for Saturday for work performed in excess of eight hours, Double time the regular rate for Sunday and Double time the regular rate for work on a holiday.

Paid Holidays
New Year's Day
Lincoln's Birthday
President's Day
Memorial Day
Independence Day
Labor Day
Columbus Day
Veteran's Day
Thanksgiving Day
Christmas Day
Employees must work at least one day in the payroll week in which the holiday occurs to receive the paid holiday

(Operating Engineer Local #15-D)

ENGINEER - FIELD (STEEL ERECTION)

Field Engineer - Steel Erection Party Chief

Effective Period: 7/1/2017 - 6/30/2018
Wage Rate per Hour: $63.64
Supplemental Benefit Rate per Hour: $33.04
Supplemental Note: Overtime benefit rate - $46.11 per hour (time & one half), $59.18 per hour (double time).

Field Engineer - Steel Erection Instrument Person

Effective Period: 7/1/2017 - 6/30/2018
Wage Rate per Hour: $49.59
Supplemental Benefit Rate per Hour: $33.04
Supplemental Note: Overtime benefit rate - $46.11 per hour (time & one half), $59.18 per hour (double time).

Field Engineer - Steel Erection Rodperson

Effective Period: 7/1/2017 - 6/30/2018
Wage Rate per Hour: $33.20
Supplemental Benefit Rate per Hour: $33.04
Supplemental Note: Overtime benefit rate - $46.11 per hour (time & one half), $59.18 per hour (double time).

Overtime Description
Time and one half the regular rate for Saturday for the first eight hours worked.
Double time the regular rate for Saturday for work performed in excess of eight hours.

Overtime
Time and one half the regular rate after an 8 hour day.
Double time the regular rate for Sunday.
Double time the regular rate for work on the following holiday(s).

Paid Holidays
New Year's Day
Lincoln's Birthday
President's Day
Memorial Day
Independence Day
Labor Day
Columbus Day
Veteran's Day
Thanksgiving Day
Christmas Day
Employees must work at least one day in the payroll week in which the holiday occurs to receive the paid holiday

(Operating Engineer Local #15-D)

ENGINEER - OPERATING

Operating Engineer - Road & Heavy Construction I

Back Filling Machines, Cranes, Mucking Machines and Dual Drum Paver.

Effective Period: 7/1/2017 - 6/30/2018
Wage Rate per Hour: $76.60
Supplemental Benefit Rate per Hour: $31.10
Supplemental Note: $56.50 overtime hours
Shift Wage Rate: $122.56

Operating Engineer - Road & Heavy Construction II

Backhoes, Power Shovels, Hydraulic Clam Shells, Steel Erection, Moles and machines of a similar nature.

Effective Period: 7/1/2017 - 6/30/2018
Wage Rate per Hour: $79.28
Supplemental Benefit Rate per Hour: $31.10
Supplemental Note: $56.50 overtime hours
Shift Wage Rate: $126.85

Operating Engineer - Road & Heavy Construction III

Mine Hoists, Cranes, etc. (Used as Mine Hoists)

Effective Period: 7/1/2017 - 6/30/2018
Wage Rate per Hour: $81.80
Supplemental Benefit Rate per Hour: $31.10
Supplemental Note: $56.50 overtime hours
Shift Wage Rate: $130.88

Operating Engineer - Road & Heavy Construction IV

Gradealls, Keystones, Cranes on land or water (with digging buckets), Bridge Cranes, Vermeer Cutter and machines of a similar nature, Trenching Machines.

Effective Period: 7/1/2017 - 6/30/2018
Wage Rate per Hour: $79.85
Supplemental Benefit Rate per Hour: $31.10
Supplemental Note: $56.50 overtime hours
Shift Wage Rate: $127.76

Operating Engineer - Road & Heavy Construction V

Pile Drivers & Rigs (employing Dock Builder foreperson): Derrick Boats, Tunnel Shovels.

Effective Period: 7/1/2017 - 6/30/2018
Wage Rate per Hour: $78.29
Supplemental Benefit Rate per Hour: $31.10
Supplemental Note: $56.50 overtime hours
Shift Wage Rate: $125.26

Operating Engineer - Road & Heavy Construction VI

Mixers (Concrete with loading attachment), Concrete Pavers, Cableways, Land Derricks, Power Houses (Low Air Pressure Units).

Effective Period: 7/1/2017 - 6/30/2018
Wage Rate per Hour: $74.42
Supplemental Benefit Rate per Hour: $31.10
Supplemental Note: $56.50 overtime hours
Shift Wage Rate: $119.07

Operating Engineer - Road & Heavy Construction VII

Barrier Movers , Barrier Transport and Machines of a Similar Nature.

Effective Period: 7/1/2017 - 6/30/2018
Wage Rate per Hour: $60.22
Supplemental Benefit Rate per Hour: $31.10
Supplemental Note: $56.50 overtime hours
Shift Wage Rate: $96.35

Operating Engineer - Road & Heavy Construction VIII

Utility Compressors

Effective Period: 7/1/2017 - 6/30/2018
Wage Rate per Hour: $46.88
Supplemental Benefit Rate per Hour: $31.10
Supplemental Note: $56.50 overtime hours
Shift Wage Rate: $58.92

Operating Engineer - Road & Heavy Construction IX

Horizontal Boring Rig

Effective Period: 7/1/2017 - 6/30/2018
Wage Rate per Hour: $70.79
Supplemental Benefit Rate per Hour: $31.10
Supplemental Note: $56.50 overtime hours
Shift Wage Rate: $113.26

Operating Engineer - Road & Heavy Construction X

Elevators (manually operated as personnel hoist).

Effective Period: 7/1/2017 - 6/30/2018
Wage Rate per Hour: $65.12
Supplemental Benefit Rate per Hour: $31.10
Supplemental Note: $56.50 overtime hours
Shift Wage Rate: $104.19

Operating Engineer - Road & Heavy Construction XI

Compressors (Portable 3 or more in battery), Driving of Truck Mounted Compressors, Well-point Pumps, Tugger Machines Well Point Pumps, Churn Drill.

Effective Period: 7/1/2017 - 6/30/2018
Wage Rate per Hour: $50.73
Supplemental Benefit Rate per Hour: $31.10
Supplemental Note: $56.50 overtime hours
Shift Wage Rate: $81.17

Operating Engineer - Road & Heavy Construction XII

All Drills and Machines of a similar nature.

Effective Period: 7/1/2017 - 6/30/2018
Wage Rate per Hour: $75.19
Supplemental Benefit Rate per Hour: $31.10
Supplemental Note: $56.50 overtime hours
Shift Wage Rate: $120.30

Operating Engineer - Road & Heavy Construction XIII

Concrete Pumps, Concrete Plant, Stone Crushers, Double Drum Hoist, Power Houses (other than above).

Effective Period: 7/1/2017 - 6/30/2018
Wage Rate per Hour: $72.84
Supplemental Benefit Rate per Hour: $31.10
Supplemental Note: $56.50 overtime hours
Shift Wage Rate: $116.54

Operating Engineer - Road & Heavy Construction XIV

Concrete Mixer

Effective Period: 7/1/2017 - 6/30/2018
Wage Rate per Hour: $69.67
Supplemental Benefit Rate per Hour: $31.10
Supplemental Note: $56.50 overtime hours
Shift Wage Rate: $111.47

Operating Engineer - Road & Heavy Construction XV

Compressors (Portable Single or two in Battery, not over 100 feet apart), Pumps (River Cofferdam) and Welding Machines, Push Button Machines, All Engines Irrespective of Power (Power-Pac) used to drive auxiliary equipment, Air, Hydraulic, etc.

Effective Period: 7/1/2017 - 6/30/2018
Wage Rate per Hour: $47.18
Supplemental Benefit Rate per Hour: $31.10
Supplemental Note: $56.50 overtime hours
Shift Wage Rate: $75.49

Operating Engineer - Road & Heavy Construction XVI

Concrete Breaking Machines, Hoists (Single Drum), Load Masters, Locomotives (over ten tons) and Dinkies over ten tons, Hydraulic Crane-Second Engineer.

Effective Period: 7/1/2017 - 6/30/2018
Wage Rate per Hour: $66.56
Supplemental Benefit Rate per Hour: $31.10

Supplemental Note: $56.50 overtime hours
Shift Wage Rate: $106.50

Operating Engineer - Road & Heavy Construction XVII

On-Site concrete plant engineer, On-site Asphalt Plant Engineer, and Vibratory console.

Effective Period: 7/1/2017 - 6/30/2018
Wage Rate per Hour: $67.07
Supplemental Benefit Rate per Hour: $31.10
Supplemental Note: $56.50 overtime hours
Shift Wage Rate: $107.31

Operating Engineer - Road & Heavy Construction XVIII

Tower Crane

Effective Period: 7/1/2017 - 6/30/2018
Wage Rate per Hour: $95.98
Supplemental Benefit Rate per Hour: $31.10
Supplemental Note: $56.50 overtime hours
Shift Wage Rate: $153.57

Operating Engineer - Paving I

Asphalt Spreaders, Autograders (C.M.I.), Roto/Mil

Effective Period: 7/1/2017 - 6/30/2018
Wage Rate per Hour: $74.42
Supplemental Benefit Rate per Hour: $31.10
Supplemental Note: $56.50 overtime hours
Shift Wage Rate: $119.07

Operating Engineer - Paving II

Asphalt Roller

Effective Period: 7/1/2017 - 6/30/2018
Wage Rate per Hour: $72.50
Supplemental Benefit Rate per Hour: $31.10
Supplemental Note: $56.50 overtime hours
Shift Wage Rate: $116.00

Operating Engineer - Paving III

Asphalt Plants

Effective Period: 7/1/2017 - 6/30/2018
Wage Rate per Hour: $61.43

Supplemental Benefit Rate per Hour: $31.10
Supplemental Note: $56.50 overtime hours
Shift Wage Rate: $98.29

Operating Engineer - Concrete I

Cranes

Effective Period: 7/1/2017 - 6/30/2018
Wage Rate per Hour: $79.50
Supplemental Benefit Rate per Hour: $31.10
Supplemental Note: $56.50 overtime hours

Operating Engineer - Concrete II

Compressors

Effective Period: 7/1/2017 - 6/30/2018
Wage Rate per Hour: $47.54
Supplemental Benefit Rate per Hour: $31.10
Supplemental Note: $56.50 overtime hours

Operating Engineer - Concrete III

Micro-traps (Negative Air Machines), Vac-All Remediation System.

Effective Period: 7/1/2017 - 6/30/2018
Wage Rate per Hour: $63.66
Supplemental Benefit Rate per Hour: $31.10
Supplemental Note: $56.50 overtime hours

Operating Engineer - Steel Erection I

Three Drum Derricks

Effective Period: 7/1/2017 - 6/30/2018
Wage Rate per Hour: $82.23
Supplemental Benefit Rate per Hour: $31.10
Supplemental Note: $56.50 overtime hours
Shift Wage Rate: $131.57

Operating Engineer - Steel Erection II

Cranes, 2 Drum Derricks, Hydraulic Cranes, Fork Lifts and Boom Trucks.

Effective Period: 7/1/2017 - 6/30/2018
Wage Rate per Hour: $79.04
Supplemental Benefit Rate per Hour: $31.10
Supplemental Note: $56.50 overtime hours
Shift Wage Rate: $126.46

Operating Engineer - Steel Erection III

Compressors, Welding Machines.

Effective Period: 7/1/2017 - 6/30/2018
Wage Rate per Hour: $47.14
Supplemental Benefit Rate per Hour: $31.10
Supplemental Note: $56.50 overtime hours
Shift Wage Rate: $75.42

Operating Engineer - Steel Erection IV

Compressors - Not Combined with Welding Machine.

Effective Period: 7/1/2017 - 6/30/2018
Wage Rate per Hour: $44.91
Supplemental Benefit Rate per Hour: $31.10
Supplemental Note: $56.50 overtime hours
Shift Wage Rate: $71.86

Operating Engineer - Building Work I

Forklifts, Plaster (Platform machine), Plaster Bucket, Concrete Pump and all other equipment used for hoisting material.

Effective Period: 7/1/2017 - 6/30/2018
Wage Rate per Hour: $62.87
Supplemental Benefit Rate per Hour: $31.10
Supplemental Note: $56.50 overtime hours

Operating Engineer - Building Work II

Compressors, Welding Machines (Cutting Concrete-Tank Work), Paint Spraying, Sandblasting, Pumps (with the exclusion of Concrete Pumps), All Engines irrespective of Power (Power-Pac) used to drive Auxiliary Equipment, Air, Hydraulic, Jacking System, etc.

Effective Period: 7/1/2017 - 6/30/2018
Wage Rate per Hour: $47.01
Supplemental Benefit Rate per Hour: $31.10
Supplemental Note: $56.50 overtime hours

Operating Engineer - Building Work III

Double Drum

Effective Period: 7/1/2017 - 6/30/2018
Wage Rate per Hour: $71.60
Supplemental Benefit Rate per Hour: $31.10
Supplemental Note: $56.50 overtime hours

Operating Engineer - Building Work IV

Stone Derrick, Cranes, Hydraulic Cranes Boom Trucks.

Effective Period: 7/1/2017 - 6/30/2018
Wage Rate per Hour: $75.87
Supplemental Benefit Rate per Hour: $31.10
Supplemental Note: $56.50 overtime hours

Operating Engineer - Building Work V

Dismantling and Erection of Cranes, Relief Engineer.

Effective Period: 7/1/2017 - 6/30/2018
Wage Rate per Hour: $69.88
Supplemental Benefit Rate per Hour: $31.10
Supplemental Note: $56.50 overtime hours

Operating Engineer - Building Work VI

4 Pole Hoist, Single Drum Hoists.

Effective Period: 7/1/2017 - 6/30/2018
Wage Rate per Hour: $69.14
Supplemental Benefit Rate per Hour: $31.10
Supplemental Note: $56.50 overtime hours

Operating Engineer - Building Work VII

Rack & Pinion and House Cars

Effective Period: 7/1/2017 - 6/30/2018
Wage Rate per Hour: $54.92
Supplemental Benefit Rate per Hour: $31.10
Supplemental Note: $56.50 overtime hours
For New House Car projects Wage Rate per Hour $43.77

Overtime Description

On jobs of more than one shift, if an Employee fails to report for work through any cause over which the Employer has no control, the Employee on duty will continue to work at the rate of single time.

For House Cars and Rack & Pinion only: Overtime paid at time and one-half for all hours in excess of eight hours in a day, Saturday, Sunday and Holidays worked.

Overtime

Double time the regular rate after an 8 hour day.
Double time the regular time rate for Saturday.
Double time the regular rate for Sunday.
Double time the regular rate for work on the following holiday(s).

Paid Holidays

New Year's Day
Lincoln's Birthday
President's Day
Memorial Day
Independence Day
Labor Day
Columbus Day
Veteran's Day
Thanksgiving Day
Day after Thanksgiving
Christmas Day
Employees must work at least one day in the payroll week in which the holiday occurs to receive the paid holiday

Shift Rates

For Steel Erection Only: Shifts may be worked at the single time rate at other than the regular working hours (8:00 A.M. to 4:30 P.M.) on the following work ONLY: Heavy construction jobs on work below the street level, over railroad tracks and on building jobs.

(Operating Engineer Local #14)

FLOOR COVERER

(Interior vinyl composition tile, sheath vinyl linoleum and wood parquet tile including site preparation and synthetic turf not including site preparation)

Floor Coverer

Effective Period: 7/1/2017 - 6/30/2018
Wage Rate per Hour: $50.50
Supplemental Benefit Rate per Hour: $45.88

Overtime

Time and one half the regular rate after an 8 hour day.
Time and one half the regular rate for Saturday.
Double time the regular rate for Sunday.

Overtime Holidays

Double time the regular rate for work on the following holiday(s).
New Year's Day
President's Day
Memorial Day
Independence Day
Labor Day
Columbus Day

Presidential Election Day
Thanksgiving Day
Day after Thanksgiving
Christmas Day

Paid Holidays

1/2 day on Christmas Eve if work is performed in the A.M.
1/2 day on New Year's Eve if work is performed in the A.M.

Shift Rates

Two shifts may be utilized with the first shift working 8:00 A.M. to the end of the shift at the straight time of pay. The second shift will receive one hour at double time rate for the last hour of the shift. (eight for seven, nine for eight).

(Carpenters District Council)

GLAZIER
(New Construction, Remodeling, and Alteration)

Glazier

Effective Period: 7/1/2017 - 6/30/2018
Wage Rate per Hour: $44.70
Supplemental Benefit Rate per Hour: $40.99
Supplemental Note: Supplemental Benefit Overtime Rate: $50.09

Overtime Description

An optional 8th hour can be worked at straight time rate. If 9th hour is worked, then both hours or more (8th & 9th or more) will be at the double time rate of pay.

Overtime

Double time the regular rate after a 7 hour day.
Double time the regular time rate for Saturday.
Double time the regular rate for Sunday.

Overtime Holidays

Double time the regular rate for work on the following holiday(s).
New Year's Day
President's Day
Memorial Day
Independence Day
Labor Day
Thanksgiving Day
Day after Thanksgiving
Christmas Day

Paid Holidays
None

Shift Rates
Shifts shall be any 7 hours beyond 4:00 P.M. for which the glazier shall receive 8 hours pay for 7 hours worked.

(Local #1281)

GLAZIER - REPAIR & MAINTENANCE
(For the Installation of Glass - All repair and maintenance work on a particular building, whenever performed, where the total cumulative contract value is under $127,628. Except where enumerated (i.e. plate glass windows) does not apply to non-residential buildings.)

Craft Jurisdiction for repair, maintenance and fabrication

Plate glass replacement, Residential glass replacement, Residential mirrors and shower doors, Storm windows and storm doors, Residential replacement windows, Herculite door repairs, Door closer repairs, Retrofit apartment house (non commercial buildings), Glass tinting.

Effective Period: 7/1/2017 - 6/30/2018
Wage Rate per Hour: $24.13
Supplemental Benefit Rate per Hour: $21.12

Overtime
Time and one half the regular rate after an 8 hour day.
Double time the regular rate for Sunday.
Time and one half the regular hourly rate after 40 hours in any work week.

Paid Holidays
New Year's Day
President's Day
Memorial Day
Independence Day
Labor Day
Thanksgiving Day
Day after Thanksgiving
Christmas Day

(Local #1281)

HEAT AND FROST INSULATOR

Heat & Frost Insulator

Effective Period: 7/1/2017 - 6/30/2018
Wage Rate per Hour: $58.38
Supplemental Benefit Rate per Hour: $39.46

Overtime Description
Double time shall be paid for supplemental benefits during overtime work.
8th hour paid at time and one half.

Overtime
Double time the regular rate after an 8 hour day.
Double time the regular time rate for Saturday.
Double time the regular rate for Sunday.

Overtime Holidays
Double time the regular rate for work on the following holiday(s).
New Year's Day
Martin Luther King Jr. Day
President's Day
Memorial Day
Independence Day
Columbus Day
Veteran's Day
Thanksgiving Day
Day after Thanksgiving
Christmas Day

Triple time the regular rate for work on the following holiday(s).
Labor Day

Paid Holidays
None

Shift Rates
The first shift shall work seven hours at the regular straight time rate. The second and third shift shall work seven hours the regular straight time hourly rate plus a fourteen percent wage and benefit premium. Off hour work in occupied or retail buildings may be worked on weekdays with an increment of $1.00 per hour and eight hours pay for seven (7) hours worked. Double time will apply for over seven (7) hours worked on weekdays, weekends or holidays.

(Local #12) (BCA)

HOUSE WRECKER
(TOTAL DEMOLITION)

House Wrecker - Tier A

On all work sites the first, second, eleventh and every third House Wrecker thereafter will be Tier A House Wreckers (i.e. 1st, 2nd, 11th, 14th etc). Other House Wreckers may be Tier B House Wreckers.

Effective Period: 7/1/2017 - 6/30/2018
Wage Rate per Hour: $36.33
Supplemental Benefit Rate per Hour: $29.22

House Wrecker - Tier B

Effective Period: 7/1/2017 - 6/30/2018
Wage Rate per Hour: $25.56
Supplemental Benefit Rate per Hour: $21.63

Overtime
Time and one half the regular rate after an 8 hour day.
Time and one half the regular rate for Saturday.
Double time the regular rate for Sunday.

Overtime Holidays
Double time the regular rate for work on the following holiday(s).
New Year's Day
President's Day
Memorial Day
Independence Day
Labor Day
Thanksgiving Day
Christmas Day

Paid Holidays
None

(Mason Tenders District Council)

IRON WORKER - ORNAMENTAL

Iron Worker - Ornamental

Effective Period: 7/1/2017 - 6/30/2018

Wage Rate per Hour: $44.20
Supplemental Benefit Rate per Hour: $51.57
Supplemental Note: Supplemental benefits are to be paid at the applicable overtime rate when overtime is in effect.

Overtime Description
Time and one half the regular rate after a 7 hour day for a maximum of two hours on any regular work day (the 8th and 9th hour) and double time shall be paid for all work on a regular work day thereafter, time and one half the regular rate for Saturday for the first seven hours of work and double time shall be paid for all work on a Saturday thereafter.

Overtime
Double time the regular rate for Sunday.

Overtime Holidays
Double time the regular rate for work on the following holiday(s).
New Year's Day
President's Day
Memorial Day
Independence Day
Labor Day
Thanksgiving Day
Christmas Day

Paid Holidays
None

Shift Rates
For off shift work - 8 hours pay for 7 hours of work. When two or three shifts are employed on a job, Monday through Friday, the workday for each shift shall be seven hours and paid for ten and one-half hours at the single time rate. When two or three shifts are worked on Saturday, Sunday or holidays, each shift shall be seven hours and paid fifteen and three-quarters hours.

(Local #580)

IRON WORKER - STRUCTURAL

Iron Worker - Structural

Effective Period: 7/1/2017 - 6/30/2018
Wage Rate per Hour: $50.05
Supplemental Benefit Rate per Hour: $72.53
Supplemental Note: Supplemental benefits are to be paid at the applicable overtime rate when overtime is in effect.

Overtime Description

Monday through Friday- the first eight hours are paid at straight time, the 9th and 10th hours are paid at time and one-half the regular rate, all additional weekday overtime is paid at double the regular rate. Saturdays- the first eight hours are paid at time and one-half the regular rate, double time thereafter. Sunday-all shifts are paid at double time.

Overtime

Time and one half the regular rate after an 8 hour day.
Time and one half the regular rate for Saturday.
Double time the regular rate for Sunday.

Overtime Holidays

Double time the regular rate for work on the following holiday(s).
New Year's Day
President's Day
Memorial Day
Independence Day
Labor Day
Thanksgiving Day
Christmas Day

Paid Holidays

1/2 day on Christmas Eve if work is performed in the A.M.
1/2 day on New Year's Eve if work is performed in the A.M.

Shift Rates

Monday through Friday - First Shift: First eight hours are paid at straight time, the 9th & 10th hours are paid at time and a half, double time paid thereafter. Second and third Shifts: First eight hours are paid at time and one-half, double time thereafter. Saturdays: All shifts, first eight hours paid at time and one-half, double time thereafter: Sunday all shifts are paid at double time.

(Local #40 & #361)

LABORER
(Foundation, Concrete, Excavating, Street Pipe Layer and Common)

Laborer

Excavation and foundation work for buildings, heavy construction, engineering work, and hazardous waste removal in connection with the above work. Landscaping tasks in connection with heavy construction work, engineering work and building projects. Projects include, but are not limited to pollution plants, sewers, parks, subways, bridges, highways, etc.

Effective Period: 7/1/2017 - 6/30/2018
Wage Rate per Hour: $41.50
Supplemental Benefit Rate per Hour: $40.63

Overtime
Time and one half the regular rate after an 8 hour day.
Time and one half the regular rate for Saturday.
Double time the regular rate for Sunday.

Overtime Holidays
Double time the regular rate for work on the following holiday(s).
New Year's Day
Memorial Day
Independence Day
Labor Day
Columbus Day
Thanksgiving Day
Christmas Day

Paid Holidays
Labor Day
Thanksgiving Day

Shift Rates
When two shifts are employed, single time rate shall be paid for each shift. When three shifts are found necessary, each shift shall work seven and one half hours (7 ½), but shall be paid for eight (8) hours of labor, and be permitted one half hour for lunch.

(Local #731)

LANDSCAPING
(Landscaping tasks, as well as tree pruning, tree removing, spraying and maintenance in connection with the planting of street trees and the planting of trees in city parks but not when such activities are performed as part of, or in connection with, other construction or reconstruction projects.)

Landscaper (Above 6 years experience)

Effective Period: 7/1/2017 - 6/30/2018
Wage Rate per Hour: $28.75
Supplemental Benefit Rate per Hour: $15.55

Landscaper (3 - 6 years experience)

Effective Period: 7/1/2017 - 6/30/2018
Wage Rate per Hour: $27.75
Supplemental Benefit Rate per Hour: $15.55

Landscaper (up to 3 years experience)

Effective Period: 7/1/2017 - 6/30/2018
Wage Rate per Hour: $25.25
Supplemental Benefit Rate per Hour: $15.55

Groundperson

Effective Period: 7/1/2017 - 6/30/2018
Wage Rate per Hour: $25.25
Supplemental Benefit Rate per Hour: $15.55

Tree Remover / Pruner

Effective Period: 7/1/2017 - 6/30/2018
Wage Rate per Hour: $33.75
Supplemental Benefit Rate per Hour: $15.55

Landscaper Sprayer (Pesticide Applicator)

Effective Period: 7/1/2017 - 6/30/2018
Wage Rate per Hour: $23.75
Supplemental Benefit Rate per Hour: $15.55

Watering - Plant Maintainer

Effective Period: 7/1/2017 - 6/30/2018
Wage Rate per Hour: $18.72
Supplemental Benefit Rate per Hour: $15.55

Overtime Description

For all overtime work performed, supplemental benefits shall include an additional seventy-five ($0.75) cents per hour.

Overtime

Time and one half the regular rate after an 8 hour day.
Time and one half the regular rate for Saturday.
Double time the regular rate for Sunday.
Time and one half the regular rate for work on a holiday plus the day's pay.

Paid Holidays

New Year's Day
Memorial Day
Independence Day
Labor Day
Thanksgiving Day
Christmas Day

Shift Rates

Work performed on a 4pm to 12am shift has a 15% differential. Work performed on a 12am to 8am shift has a 20% differential.

(Local #175)

MARBLE MECHANIC

Marble Setter

Effective Period: 7/1/2017 - 6/30/2018
Wage Rate per Hour: $52.74
Supplemental Benefit Rate per Hour: $38.67

Marble Finisher

Effective Period: 7/1/2017 - 6/30/2018
Wage Rate per Hour: $41.46
Supplemental Benefit Rate per Hour: $36.64

Marble Polisher

Effective Period: 7/1/2017 - 6/30/2018
Wage Rate per Hour: $37.93
Supplemental Benefit Rate per Hour: $28.33

Overtime Description

Supplemental Benefit contributions are to be made at the applicable overtime rates. Time and one half the regular rate after a 7 hour day or time and one half the regular rate after an 8 hour day - chosen by Employer at the start of the project and then would last for the full duration of the project.

Overtime

Time and one half the regular rate for Saturday.
Double time the regular rate for Sunday.

Overtime Holidays

Double time the regular rate for work on the following holiday(s).
New Year's Day
President's Day
Good Friday
Memorial Day
Independence Day
Labor Day
Columbus Day
Veteran's Day
Thanksgiving Day
Day after Thanksgiving

Christmas Day

Paid Holidays
None

(Local #7)

MASON TENDER

Mason Tender

Effective Period: 7/1/2017 - 6/30/2018
Wage Rate per Hour: $37.90
Supplemental Benefit Rate per Hour: $30.59

Overtime
Time and one half the regular rate after an 8 hour day.
Time and one half the regular rate for Saturday.
Double time the regular rate for Sunday.
Saturday may be used as a make-up day at straight time when a day is lost during that week to inclement weather.

Overtime Holidays
Double time the regular rate for work on the following holiday(s).
New Year's Day
President's Day
Memorial Day
Independence Day
Labor Day
Thanksgiving Day
Christmas Day

Paid Holidays
None

Shift Rates
The Employer may work two (2) shifts with the first shift at the straight time wage rate and the second shift receiving eight (8) hours paid for seven (7) hours work at the straight time wage rate.

(Local #79)

MASON TENDER (INTERIOR DEMOLITION WORKER)

Mason Tender Tier A

Tier A Interior Demolition Worker performs all burning, chopping, and other technically skilled tasks related to interior demolition work.

Effective Period: 7/1/2017 - 6/30/2018
Wage Rate per Hour: $36.19
Supplemental Benefit Rate per Hour: $24.25

Mason Tender Tier B

Tier B Interior Demolition Worker performs manual work and work incidental to demolition work, such as loading and carting of debris from the work site to an area where it can be loaded in to bins/trucks for removal. Also performs clean-up of the site when demolition is completed.

Effective Period: 7/1/2017 - 6/30/2018
Wage Rate per Hour: $25.38
Supplemental Benefit Rate per Hour: $18.57

Overtime
Time and one half the regular rate after an 8 hour day.
Time and one half the regular rate for Sunday.

Overtime Holidays
Double time the regular rate for work on the following holiday(s).
New Year's Day
President's Day
Memorial Day
Independence Day
Labor Day
Thanksgiving Day
Christmas Day

Paid Holidays
None

(Local #79)

METALLIC LATHER

Metallic Lather

Effective Period: 7/1/2017 - 6/30/2018

Wage Rate per Hour: $46.28
Supplemental Benefit Rate per Hour: $42.92
Supplemental Note: Supplemental benefits for overtime are paid at the appropriate overtime rate.

Overtime Description
Overtime would be time and one half the regular rate after a seven (7) or eight (8) hours workday, which would be set at the start of the job.

Overtime
Time and one half the regular rate for Saturday.
Double time the regular rate for Sunday.

Overtime Holidays
Double time the regular rate for work on the following holiday(s).
New Year's Day
Washington's Birthday
Memorial Day
Independence Day
Labor Day
Columbus Day
Thanksgiving Day
Christmas Day

Paid Holidays
1/2 day on Christmas Eve if work is performed in the A.M.
1/2 day on New Year's Eve if work is performed in the A.M.

Shift Rates
There will be no shift differential paid on the first shift if more than one shift is employed. The shift differential will remain $12/hour on the second and third shift for the first eight (8) hours if worked. There will be no pyramiding on overtime worked on second and third shifts. The time and one half (1.5x) rate will be against the base wage rate, not the shift differential

(Local #46)

MILLWRIGHT

Millwright

Effective Period: 7/1/2017 - 6/30/2018
Wage Rate per Hour: $51.50
Supplemental Benefit Rate per Hour: $52.41

Overtime
Time and one half the regular rate after an 8 hour day.
Time and one half the regular rate for Saturday.

Double time the regular rate for Sunday.
Saturday may be used as a make-up day at straight time when a day is lost during that week to inclement weather.

Overtime Holidays

Double time the regular rate for work on the following holiday(s).
New Year's Day
President's Day
Good Friday
Memorial Day
Independence Day
Labor Day
Columbus Day
Presidential Election Day
Thanksgiving Day
Christmas Day

Paid Holidays

1/2 day on Christmas Eve if work is performed in the A.M.
1/2 day on New Year's Eve if work is performed in the A.M.

Shift Rates

The first shift shall receive the straight time rate of pay. The second shift receives the straight time rate of pay plus fifteen (15%) per cent. Members of the second shift shall be allowed one half hour to eat, with this time being included in the hours of the workday established. There must be a first shift to work a second shift. All additional hours worked shall be paid at the time and one-half rate of pay plus fifteen (15%) per cent for weekday hours.

(Local #740)

MOSAIC MECHANIC

Mosaic Mechanic - Mosaic & Terrazzo Mechanic

Effective Period: 7/1/2017 - 6/30/2018
Wage Rate per Hour: $46.86
Supplemental Benefit Rate per Hour: $40.65
Supplemental Note: Supplemental benefits for overtime to be paid at the rate of $51.67 per hour.

Mosaic Mechanic - Mosaic & Terrazzo Finisher

Effective Period: 7/1/2017 - 6/30/2018
Wage Rate per Hour: $45.26
Supplemental Benefit Rate per Hour: $40.63
Supplemental Note: Supplemental benefits for overtime to be paid at the rate of $51.65 per hour.

Mosaic Mechanic - Machine Operator Grinder

Effective Period: 7/1/2017 - 6/30/2018
Wage Rate per Hour: $45.26
Supplemental Benefit Rate per Hour: $40.63
Supplemental Note: Supplemental benefits for overtime to be paid at the rate of $51.65 per hour.

Overtime
Time and one half the regular rate after a 7 hour day.
Time and one half the regular rate for Saturday.
Double time the regular rate for Sunday.

Overtime Holidays
Double time the regular rate for work on the following holiday(s).
New Year's Day
Washington's Birthday
Good Friday
Independence Day
Labor Day
Columbus Day
Veteran's Day
Thanksgiving Day
Day after Thanksgiving
Christmas Day

Paid Holidays
None

(Local #7)

PAINTER

Painter - Brush & Roller

Effective Period: 7/1/2017 - 6/30/2018
Wage Rate per Hour: $42.50
Supplemental Benefit Rate per Hour: $28.62
Supplemental Note: $ 33.25 on overtime

Spray & Scaffold / Decorative / Sandblast

Effective Period: 7/1/2017 - 6/30/2018
Wage Rate per Hour: $45.50
Supplemental Benefit Rate per Hour: $28.62
Supplemental Note: $ 33.25 on overtime

Overtime
Time and one half the regular rate after a 7 hour day.
Time and one half the regular rate for Saturday.
Time and one half the regular rate for Sunday.

Overtime Holidays
Time and one half the regular rate for work on the following holiday(s).
New Year's Day
President's Day
Memorial Day
Independence Day
Labor Day
Columbus Day
Thanksgiving Day
Christmas Day

Paid Holidays
None

(District Council of Painters #9)

PAINTER - METAL POLISHER

METAL POLISHER

Effective Period: 7/1/2017 - 6/30/2018
Wage Rate per Hour: $29.73
Supplemental Benefit Rate per Hour: $7.06

METAL POLISHER - NEW CONSTRUCTION

Effective Period: 7/1/2017 - 6/30/2018
Wage Rate per Hour: $30.68
Supplemental Benefit Rate per Hour: $7.06

METAL POLISHER - SCAFFOLD OVER 34 FEET

Effective Period: 7/1/2017 - 6/30/2018
Wage Rate per Hour: $33.23
Supplemental Benefit Rate per Hour: $7.06

Overtime Description
All work performed on Saturdays shall be paid at time-in-a half. The exception being; for suspended scaffold work and work deemed as a construction project; an eight (8) hour shift lost during the week due to

circumstances beyond the control of the employer, up to amaximumof eight (8) hours per week, may be worked on Saturday at the straight time rate.

Overtime

Time and one half the regular rate after an 8 hour day.
Time and one half the regular rate for Saturday.
Double time the regular rate for Sunday.
Saturday may be used as a make-up day at straight time when a day is lost during that week to inclement weather.
Triple time the regular rate for work on the following holiday(s).

Paid Holidays

New Year's Day
Martin Luther King Jr. Day
President's Day
Memorial Day
Independence Day
Labor Day
Columbus Day
Veteran's Day
Thanksgiving Day
Day after Thanksgiving
Christmas Day

Shift Rates

Four Days a week at Ten (10) hours straight a day.

Local 8A-28A

PAINTER - STRIPER

Striper (paint)

Effective Period: 7/1/2017 - 6/30/2018
Wage Rate per Hour: $35.00
Supplemental Benefit Rate per Hour: $12.37
Supplemental Note: Overtime Supplemental Benefit rate - $8.02; New Hire Rate (0-3 months) - $0.00

Lineperson (thermoplastic)

Effective Period: 7/1/2017 - 6/30/2018
Wage Rate per Hour: $39.00
Supplemental Benefit Rate per Hour: $12.37
Supplemental Note: Overtime Supplemental Benefit rate - $8.02; New Hire Rate (0-3 months) - $0.00

Overtime

Time and one half the regular rate after an 8 hour day.
Time and one half the regular rate for Saturday.
Double time the regular rate for Sunday.
Time and one half the regular rate for work on the following holiday(s).

Paid Holidays

New Year's Day
Good Friday
Memorial Day
Independence Day
Labor Day
Columbus Day
Presidential Election Day
Thanksgiving Day
Day after Thanksgiving
Christmas Day

Shift Rates

Employees hired before April 1, 2003: 15% night shift premium differential for work commenced at 9:00 PM or later.

Vacation

Employees with one to two years service shall accrue vacation based on hours worked: 250 hours worked - 1 day vacation; 500 hours worked - 2 days vacation; 750 hours worked - 3 days vacation; 900 hours worked - 4 days vacation; 1,000 hours worked - 5 days vacation. Employees with two to five years service receive two weeks vacation. Employees with five to twenty years service receive three weeks vacation. Employees with twenty to twenty-five years service receive four weeks vacation. Employees with 25 or more years service receive five weeks vacation. Vacation must be taken during winter months. 2 Personal Days except employees hired after 4/1/12 who do not have 2 years of service.

(Local #917)

PAINTER - STRUCTURAL STEEL

Painters on Structural Steel

Effective Period: 7/1/2017 - 9/30/2017
Wage Rate per Hour: $49.50
Supplemental Benefit Rate per Hour: $37.08

Effective Period: 10/1/2017 - 6/30/2018
Wage Rate per Hour: $50.00
Supplemental Benefit Rate per Hour: $38.33

Painter - Power Tool

Effective Period: 7/1/2017 - 9/30/2017
Wage Rate per Hour: $55.50

Supplemental Benefit Rate per Hour: $37.08
Overtime Wage Rate: $6.00 above the "Painters on Structural Steel" overtime rate.

Effective Period: 10/1/2017 - 6/30/2018
Wage Rate per Hour: $56.00
Supplemental Benefit Rate per Hour: $38.33
Overtime Wage Rate: $6.00 above the "Painters on Structural Steel" overtime rate.

Overtime Description
Supplemental Benefits shall be paid for each hour worked, up to forty (40) hours per week for the period of May 1st to November 15th or up to fifty (50) hours per week for the period of November 16th to April 30th.

Overtime
Time and one half the regular rate after a 7 hour day.
Time and one half the regular rate for Saturday.
Time and one half the regular rate for Sunday.

Overtime Holidays
Double time the regular rate for work on the following holiday(s).
New Year's Day
Memorial Day
Independence Day
Labor Day
Thanksgiving Day
Christmas Day

Paid Holidays
None

Shift Rates
Regular hourly rates plus a ten per cent (10%) differential

(Local #806)

PAPERHANGER

Paperhanger

Effective Period: 7/1/2017 - 6/30/2018
Wage Rate per Hour: $44.89
Supplemental Benefit Rate per Hour: $31.13
Supplemental Note: Supplemental benefits are to be paid at the appropriate straight time and overtime rate.

Overtime
Time and one half the regular rate after a 7 hour day.
Time and one half the regular rate for Saturday.

Time and one half the regular rate for Sunday.

Overtime Holidays
Time and one half the regular rate for work on the following holiday(s).
New Year's Day
President's Day
Memorial Day
Independence Day
Labor Day
Thanksgiving Day
Day after Thanksgiving
Christmas Day

Paid Holidays
None

Shift Rates
Evening shift - 4:30 P.M. to 12:00 Midnight (regular rate of pay); any work performed before 7:00 A.M. shall be at time and one half the regular base rate of pay.

(District Council of Painters #9)

PAVER AND ROADBUILDER

Paver & Roadbuilder - Formsetter

Effective Period: 7/1/2017 - 6/30/2018
Wage Rate per Hour: $45.85
Supplemental Benefit Rate per Hour: $40.98

Paver & Roadbuilder - Laborer

Paving and road construction work, regardless of material used, including but not limited to preparation of job sites, removal of old surfaces, asphalt and/or concrete, by whatever method, including but not limited to milling; laying of concrete; laying of asphalt for temporary, patchwork, and utility paving (but not production paving); site preparation and incidental work before the installation of rubberized materials and similar surfaces; installation and repair of temporary construction fencing; slurry seal coating, maintenance of safety surfaces; play equipment installation, and other related work.

Effective Period: 7/1/2017 - 6/30/2018
Wage Rate per Hour: $41.98
Supplemental Benefit Rate per Hour: $40.98

Production Paver & Roadbuilder - Screed Person

(Production paving is asphalt paving when using a paving machine or on a project where a paving machine is traditionally used)

Adjustment of paving machinery on production paving jobs.

Effective Period: 7/1/2017 - 6/30/2018
Wage Rate per Hour: $46.45
Supplemental Benefit Rate per Hour: $40.98

Production Paver & Roadbuilder - Raker

Effective Period: 7/1/2017 - 6/30/2018
Wage Rate per Hour: $45.85
Supplemental Benefit Rate per Hour: $40.98

Production Paver & Roadbuilder - Shoveler

General laborer (except removal of surfaces - see Paver and Roadbuilder-Laborer) including but not limited to tamper, AC paint and liquid tar work.

Effective Period: 7/1/2017 - 6/30/2018
Wage Rate per Hour: $42.37
Supplemental Benefit Rate per Hour: $40.98

Overtime Description
If an employee works New Year's Day or Christmas Day, they receive the single time rate plus 25%.

Overtime
Time and one half the regular rate after an 8 hour day.
Time and one half the regular rate for Saturday.
Double time the regular rate for Sunday.

Overtime Holidays
Double time the regular rate for work on the following holiday(s).
Memorial Day
Independence Day
Labor Day
Columbus Day
Thanksgiving Day

Shift Rates
When two shifts are employed, the work period for each shift shall be a continuous eight (8) hours. When three shifts are employed, each shift will work seven and one half (7 ½) hours but will be paid for eight (8) hours since only one half (1/2) hour is allowed for meal time.
When two or more shifts are employed, single time will be paid for each shift.

Night Work - On night work, the first eight (8) hours of work will be paid for at the single time rate, except that production paving work shall be paid at 10% over the single time rate for the screed person, rakers and shovelers directly involved only. This differential is to be paid when there is only one shift and the shift works at night. All other workers will be exempt. Hours worked over eight (8) hours during said shift shall be paid for at the time and one-half rate.

(Local #1010)

PLASTERER

Plasterer

Effective Period: 7/1/2017 - 6/30/2018
Wage Rate per Hour: $44.93
Supplemental Benefit Rate per Hour: $25.15

Overtime
Time and one half the regular rate after an 8 hour day.
Time and one half the regular rate for Saturday.
Double time the regular rate for Sunday.
Saturday may be used as a make-up day at straight time when a day is lost during that week to inclement weather.

Overtime Holidays
Double time the regular rate for work on the following holiday(s).
New Year's Day
President's Day
Memorial Day
Independence Day
Labor Day
Thanksgiving Day
Christmas Day

Paid Holidays
None

Shift Rates
When it is not possible to conduct alteration work during regular work hours, in a building occupied by tenants, said work shall proceed on a shift basis: however work over seven (7) hours in any twenty four (24) hour period, the time after seven (7) hours shall be considered overtime.
The second shift shall start at a time between 3:30 p.m. and 7:00 p.m. and shall consist of seven (7) working hours and shall receive eight (8) hours of wages and benefits at the straight time rate. The workers on the second shift shall be allowed one-half (½) hour to eat with this time being included in the seven (7) hours of work.

(Local #262)

PLASTERER - TENDER

Plasterer - Tender

Effective Period: 7/1/2017 - 6/30/2018
Wage Rate per Hour: $37.90
Supplemental Benefit Rate per Hour: $30.59

Overtime
Time and one half the regular rate after an 8 hour day.
Time and one half the regular rate for Saturday.
Double time the regular rate for Sunday.
Saturday may be used as a make-up day at straight time when a day is lost during that week to inclement weather.

Overtime Holidays
Double time the regular rate for work on the following holiday(s).
New Year's Day
Washington's Birthday
Memorial Day
Independence Day
Labor Day
Presidential Election Day
Thanksgiving Day
Christmas Day

Paid Holidays
None

Shift Rates
When work commences outside regular work hours, workers receive an hour additional (differential) wage and supplement payment. Eight hours pay for seven hours work or nine hours pay for eight hours work.

(Mason Tenders District Council)

PLUMBER

Plumber

Effective Period: 7/1/2017 - 6/30/2018
Wage Rate per Hour: $67.25
Supplemental Benefit Rate per Hour: $31.80
Supplemental Note: Supplemental benefit contributions are to be made at the applicable overtime rates.

Plumber - Temporary Services

Temporary Services - When there are no Plumbers on the job site, there may be three shifts designed to cover the entire twenty-four hour period, including weekends if necessary, at the following rate straight time.

Effective Period: 7/1/2017 - 6/30/2018
Wage Rate per Hour: $53.88
Supplemental Benefit Rate per Hour: $25.36

Overtime Description
Double time the regular rate after a 7 hour day - unless for new construction site work where the plumbing contract price is $1.5 million or less, the hours of labor can be 8 hours per day at the employers option. On Alteration jobs when other mechanical trades at the site are working an eighth hour at straight time, then the plumber shall also work an eighth hour at straight time.

Overtime
Double time the regular time rate for Saturday.
Double time the regular rate for Sunday.

Overtime Holidays
Double time the regular rate for work on the following holiday(s).
New Year's Day
President's Day
Memorial Day
Independence Day
Labor Day
Columbus Day
Veteran's Day
Thanksgiving Day
Day after Thanksgiving
Christmas Day

Shift Rates
Shift work, when directly specified in public agency or authority documents where plumbing contract is $8 million or less, will be permitted. 30% shift premium shall be paid for wages and fringe benefits for 4:00 pm and midnight shifts Monday to Friday. 50% shift premium shall be paid for wages and fringe benefits for 4:00 pm and midnight shift work performed on weekends. For shift work on holidays, double time wages and fringe benefits shall be paid.

(Plumbers Local #1)

PLUMBER (MECHNICAL EQUIPMENT AND SERVICE)
(Mechanical Equipment and Service work shall include any repair and/or replacement of the present plumbing system.)

Plumber

Effective Period: 7/1/2017 - 6/30/2018
Wage Rate per Hour: $41.20
Supplemental Benefit Rate per Hour: $15.41

Overtime
Time and one half the regular rate after an 8 hour day.
Time and one half the regular rate for Saturday.
Time and one half the regular rate for Sunday.

Overtime Holidays
Time and one half the regular rate for work on the following holiday(s).
New Year's Day
President's Day
Memorial Day
Independence Day
Thanksgiving Day
Day after Thanksgiving
Christmas Day

Paid Holidays
None

(Plumbers Local # 1)

PLUMBER (RESIDENTIAL RATES FOR 1, 2 AND 3 FAMILY HOME CONSTRUCTION)

Effective Period: 7/1/2017 - 6/30/2018
Wage Rate per Hour: $46.66
Supplemental Benefit Rate per Hour: $22.95

Overtime
Double time the regular rate after an 8 hour day.
Double time the regular time rate for Saturday.
Double time the regular rate for Sunday.

Overtime Holidays
Double time the regular rate for work on the following holiday(s).
New Year's Day
President's Day
Memorial Day
Independence Day
Labor Day
Columbus Day
Veteran's Day

Thanksgiving Day
Day after Thanksgiving
Christmas Day

Paid Holidays
None

Shift Rates
30% shift premium shall be paid for wages and fringe benefits for 4:00 pm and midnight shifts Monday to Friday.
50% shift premium shall be paid for wages and fringe benefits for 4:00 pm and midnight shift work performed on weekends. For shift work on holidays, double time wages and fringe benefits shall be paid.

(Plumbers Local #1)

PLUMBER: PUMP & TANK
Oil Trades (Installation and Maintenance)

Plumber - Pump & Tank

Effective Period: 7/1/2017 - 6/30/2018
Wage Rate per Hour: $64.22
Supplemental Benefit Rate per Hour: $23.21

Overtime
Time and one half the regular rate after an 8 hour day.
Time and one half the regular rate for Saturday.
Time and one half the regular rate for Sunday.

Overtime Holidays
Time and one half the regular rate for work on the following holiday(s).
New Year's Day
President's Day
Memorial Day
Independence Day
Labor Day
Columbus Day
Veteran's Day
Thanksgiving Day
Day after Thanksgiving
Christmas Day

Paid Holidays
None

Shift Rates

All work outside the regular workday (8:00 A.M. to 3:30 P.M.) is to be paid at time and one half the regular hourly rate

(Plumbers Local #1)

POINTER, WATERPROOFER, CAULKER, SANDBLASTER, STEAMBLASTER
(Exterior Building Renovation)

Journeyperson

Effective Period: 7/1/2017 - 6/30/2018
Wage Rate per Hour: $52.57
Supplemental Benefit Rate per Hour: $25.80

Overtime
Time and one half the regular rate after an 8 hour day.
Time and one half the regular rate for Saturday.
Time and one half the regular rate for Sunday.
Saturday may be used as a make-up day at straight time when a day is lost during that week to inclement weather.

Overtime Holidays
Time and one half the regular rate for work on the following holiday(s).
New Year's Day
Martin Luther King Jr. Day
President's Day
Memorial Day
Independence Day
Labor Day
Thanksgiving Day
Christmas Day

Paid Holidays
None

Shift Rates
All work outside the regular work day (an eight hour workday between the hours of 6:00 A.M. and 4:30 P.M.) is to be paid at time and one half the regular rate.

(Bricklayer District Council)

ROOFER

Roofer

Effective Period: 7/1/2017 - 6/30/2018
Wage Rate per Hour: $41.50
Supplemental Benefit Rate per Hour: $32.27

Overtime
Time and one half the regular rate after an 8 hour day.
Time and one half the regular rate for Saturday.
Time and one half the regular rate for Sunday.

Overtime Holidays
Time and one half the regular rate for work on the following holiday(s).
New Year's Day
Memorial Day
Independence Day
Labor Day
Thanksgiving Day
Christmas Day

Paid Holidays
None

Shift Rates
Second shift - Regular hourly rate plus a 10% differential. Third shift - Regular hourly rate plus a 15% differential.

(Local #8)

SHEET METAL WORKER

Sheet Metal Worker

Effective Period: 7/1/2017 - 6/30/2018
Wage Rate per Hour: $48.90
Supplemental Benefit Rate per Hour: $48.00
Supplemental Note: Supplemental benefit contributions are to be made at the applicable overtime rates.

Sheet Metal Worker - Fan Maintenance

(The temporary operation of fans or blowers in new or existing buildings for heating and/or ventilation, and/or air conditioning prior to the completion of the project.)

Effective Period: 7/1/2017 - 6/30/2018
Wage Rate per Hour: $39.12
Supplemental Benefit Rate per Hour: $48.00

Sheet Metal Worker - Duct Cleaner

Effective Period: 7/1/2017 - 6/30/2018
Wage Rate per Hour: $12.90
Supplemental Benefit Rate per Hour: $8.07

Overtime
Time and one half the regular rate after an 8 hour day.
Time and one half the regular rate for Saturday.
Double time the regular rate for Sunday.

Overtime Holidays
Double time the regular rate for work on the following holiday(s).
New Year's Day
Martin Luther King Jr. Day
President's Day
Memorial Day
Independence Day
Labor Day
Columbus Day
Veteran's Day
Thanksgiving Day
Day after Thanksgiving
Christmas Day

Paid Holidays
None

Shift Rates
Work that can only be performed outside regular working hours (eight hours of work between 7:30 A.M. and 3:30 P.M.) - First shift (work between 3:30 P.M. and 11:30 P.M.) - 10% differential above the established hourly rate. Second shift (work between 11:30 P.M. and 7:30 A.M.) - 15% differential above the established hourly rate.

For Fan Maintenance: On all full shifts of fan maintenance work the straight time hourly rate of pay will be paid for each shift, including nights, Saturdays, Sundays, and holidays.

(Local #28)

SHEET METAL WORKER - SPECIALTY
(Decking & Siding)

Sheet Metal Specialty Worker

The first worker to perform this work must be paid at the rate of the Sheet Metal Worker. The second and third workers shall be paid the Specialty Worker Rate. The ratio of One Sheet Metal Worker, then Two Specialty Workers shall be utilized thereafter.

Effective Period: 7/1/2017 - 6/30/2018
Wage Rate per Hour: $44.57
Supplemental Benefit Rate per Hour: $25.02
Supplemental Note: Supplemental benefit contributions are to be made at the applicable overtime rates.

Overtime
Time and one half the regular rate after an 8 hour day.
Time and one half the regular rate for Saturday.
Double time the regular rate for Sunday.

Overtime Holidays
Double time the regular rate for work on the following holiday(s).
New Year's Day
Martin Luther King Jr. Day
President's Day
Memorial Day
Independence Day
Labor Day
Columbus Day
Veteran's Day
Thanksgiving Day
Christmas Day

Paid Holidays
None

(Local #28)

SHIPYARD WORKER

Shipyard Mechanic - First Class

Effective Period: 7/1/2017 - 6/30/2018
Wage Rate per Hour: $28.12
Supplemental Benefit Rate per Hour: $3.03

Shipyard Mechanic - Second Class

Effective Period: 7/1/2017 - 6/30/2018

Wage Rate per Hour: $23.35
Supplemental Benefit Rate per Hour: $2.85

Shipyard Laborer - First Class

Effective Period: 7/1/2017 - 6/30/2018
Wage Rate per Hour: $20.96
Supplemental Benefit Rate per Hour: $2.76

Shipyard Laborer - Second Class

Effective Period: 7/1/2017 - 6/30/2018
Wage Rate per Hour: $15.24
Supplemental Benefit Rate per Hour: $2.54

Shipyard Dockhand - First Class

Effective Period: 7/1/2017 - 6/30/2018
Wage Rate per Hour: $22.89
Supplemental Benefit Rate per Hour: $2.83

Shipyard Dockhand - Second Class

Effective Period: 7/1/2017 - 6/30/2018
Wage Rate per Hour: $16.51
Supplemental Benefit Rate per Hour: $2.58

Overtime Description
Work performed on holiday is paid double time the regular hourly wage rate plus holiday pay.

Overtime
Time and one half the regular rate after an 8 hour day.
Time and one half the regular rate for Saturday.
Double time the regular rate for Sunday.
Time and one half the regular hourly rate after 40 hours in any work week.

Paid Holidays
New Year's Day
Martin Luther King Jr. Day
President's Day
Good Friday
Memorial Day
Independence Day
Labor Day
Thanksgiving Day
Day after Thanksgiving
Christmas Day

Based on Survey Data

SIGN ERECTOR
(Sheet Metal, Plastic, Electric, and Neon)

Sign Erector

Effective Period: 7/1/2017 - 6/30/2018
Wage Rate per Hour: $47.67
Supplemental Benefit Rate per Hour: $50.67

Overtime
Time and one half the regular rate after a 7 hour day.
Time and one half the regular rate for Saturday.
Time and one half the regular rate for Sunday.
Time and one half the regular rate for work on the following holiday(s).

Paid Holidays
New Year's Day
Washington's Birthday
Memorial Day
Independence Day
Labor Day
Columbus Day
Election Day
Thanksgiving Day
Day after Thanksgiving
Christmas Day

Shift Rates
Time and one half the regular hourly rate is to be paid for all hours worked outside the regular workday either (7:00 A.M. through 2:30 P.M.) or (8:00 A.M. through 3:30 P.M.)

(Local #137)

STEAMFITTER

Steamfitter I

Effective Period: 7/1/2017 - 6/30/2018
Wage Rate per Hour: $55.50
Supplemental Benefit Rate per Hour: $55.29

Supplemental Note: Overtime supplemental benefit rate: $109.84

Steamfitter -Temporary Services

The steamfitters shall not do any other work and shall not be permitted to work more than one shift in a twenty-four hour day. When steamfitters are present during the regular working day, no temporary services steamfitter will be required

Effective Period: 7/1/2017 - 6/30/2018
Wage Rate per Hour: $42.18
Supplemental Benefit Rate per Hour: $44.84

Overtime
Double time the regular rate after a 7 hour day.
Double time the regular time rate for Saturday.
Double time the regular rate for Sunday.

Overtime Holidays
Double time the regular rate for work on the following holiday(s).
New Year's Day
President's Day
Memorial Day
Independence Day
Labor Day
Columbus Day
Veteran's Day
Thanksgiving Day
Day after Thanksgiving
Christmas Day

Paid Holidays
None

Shift Rates
Work performed between 3:30 P.M. and 7:00 A.M. and on Saturdays, Sundays and Holidays shall be at double time the regular hourly rate and paid at the overtime supplemental benefit rate above.

Steamfitter II

For heating, ventilation, air conditioning and mechanical public works contracts with a dollar value not to exceed $15,000,000 and for fire protection/sprinkler public works contracts not to exceed $1,500,000.

Effective Period: 7/1/2017 - 6/30/2018
Wage Rate per Hour: $55.50
Supplemental Benefit Rate per Hour: $55.29
Supplemental Note: Overtime supplemental benefit rate: $109.84

Steamfitter -Temporary Services

The steamfitters shall not do any other work and shall not be permitted to work more than one shift in a twenty-four hour day. When steamfitters are present during the regular working day, no temporary services steamfitter will be required.

Effective Period: 7/1/2017 - 6/30/2018
Wage Rate per Hour: $42.18
Supplemental Benefit Rate per Hour: $44.84

Overtime
Double time the regular rate after an 8 hour day.
Double time the regular time rate for Saturday.
Double time the regular rate for Sunday.

Overtime Holidays
Double time the regular rate for work on the following holiday(s).
New Year's Day
President's Day
Memorial Day
Independence Day
Labor Day
Columbus Day
Veteran's Day
Thanksgiving Day
Day after Thanksgiving
Christmas Day

Paid Holidays
None

Shift Rates
May be performed outside of the regular workday except Saturday, Sunday and Holidays. A shift shall consist of eight working hours. All work performed in excess of eight hours shall be paid at double time. No shift shall commence after 7:00 P.M. on Friday or 7:00 P.M. the day before holidays. All work performed after 12:01 A.M. Saturday or 12:01 A.M. the day before a Holiday will be paid at double time. When shift work is performed the wage rate for regular time worked is a thirty percent premium together with fringe benefits.

On Transit Authority projects, where work is performed in the vicinity of tracks all shift work on weekends and holidays may be performed at the regular shift rates.

Local #638

STEAMFITTER - REFRIGERATION AND AIR CONDITIONER
(Maintenance and Installation Service Person)

Refrigeration and Air Conditioner Mechanic

Effective Period: 7/1/2017 - 6/30/2018
Wage Rate per Hour: $39.50
Supplemental Benefit Rate per Hour: $15.81

Refrigeration and Air Conditioner Service Person V

Effective Period: 7/1/2017 - 6/30/2018
Wage Rate per Hour: $32.46
Supplemental Benefit Rate per Hour: $14.16

Refrigeration and Air Conditioner Service Person IV

Effective Period: 7/1/2017 - 6/30/2018
Wage Rate per Hour: $26.89
Supplemental Benefit Rate per Hour: $12.80

Refrigeration and Air Conditioner Service Person III

Filter changing and maintenance thereof, oil and greasing, tower and coil cleaning, scraping and painting, general housekeeping, taking of water samples.

Effective Period: 7/1/2017 - 6/30/2018
Wage Rate per Hour: $23.08
Supplemental Benefit Rate per Hour: $11.79

Refrigeration and Air Conditioner Service Person II

Filter changing and maintenance thereof, oil and greasing, tower and coil cleaning, scraping and painting, general housekeeping, taking of water samples.

Effective Period: 7/1/2017 - 6/30/2018
Wage Rate per Hour: $19.14
Supplemental Benefit Rate per Hour: $10.85

Refrigeration and Air Conditioner Service Person I

Filter changing and maintenance thereof, oil and greasing, tower and coil cleaning, scraping and painting, general housekeeping, taking of water samples.

Effective Period: 7/1/2017 - 6/30/2018
Wage Rate per Hour: $14.00
Supplemental Benefit Rate per Hour: $9.76

Overtime

Time and one half the regular rate after an 8 hour day.
Time and one half the regular rate for Saturday.
Double time the regular rate for Sunday.

Overtime Holidays

Double time the regular rate for work on the following holiday(s).
New Year's Day
Independence Day
Labor Day
Veteran's Day
Thanksgiving Day
Christmas Day

Double time and one half the regular rate for work on the following holiday(s).
Martin Luther King Jr. Day
President's Day
Memorial Day
Columbus Day

Paid Holidays

New Year's Day
Martin Luther King Jr. Day
President's Day
Memorial Day
Independence Day
Labor Day
Columbus Day
Veteran's Day
Thanksgiving Day
Christmas Day

(Local #638B)

STONE MASON - SETTER

Stone Mason - Setter

Effective Period: 7/1/2017 - 6/30/2018
Wage Rate per Hour: $53.62
Supplemental Benefit Rate per Hour: $41.65

Overtime

Time and one half the regular rate after a 7 hour day.
Time and one half the regular rate for Saturday.
Double time the regular rate for Sunday.

Overtime Holidays

Double time the regular rate for work on the following holiday(s).
New Year's Day
Washington's Birthday
Good Friday

Memorial Day
Independence Day
Labor Day
Thanksgiving Day
Christmas Day

Paid Holidays

1/2 day on Christmas Eve if work is performed in the A.M.

Shift Rates

For all work outside the regular workday (8:00 A.M. to 3:30 P.M. Monday through Friday), the pay shall be straight time plus a ten percent (10%) differential.

(Bricklayers District Council)

TAPER

Drywall Taper

Effective Period: 7/1/2017 - 6/30/2018
Wage Rate per Hour: $47.82
Supplemental Benefit Rate per Hour: $22.68

Overtime

Time and one half the regular rate after a 7 hour day.
Time and one half the regular rate for Saturday.
Time and one half the regular rate for Sunday.

Overtime Holidays

Time and one half the regular rate for work on the following holiday(s).
New Year's Day
Martin Luther King Jr. Day
President's Day
Good Friday
Memorial Day
Independence Day
Labor Day
Columbus Day
Thanksgiving Day
Christmas Day

Paid Holidays

Any worker who reports to work on Christmas Eve or New Year's Eve pursuant to his employer's instruction shall be entitled to three (3) hours afternoon pay without working.

(Local #1974)

TELECOMMUNICATION WORKER
(Voice Installation Only)

Telecommunication Worker

Effective Period: 7/1/2017 - 6/30/2018
Wage Rate per Hour: $40.35
Supplemental Benefit Rate per Hour: $13.19
Supplemental Note: The above rate applies for Manhattan, Bronx, Brooklyn, Queens. $12.64 for Staten Island only.

Overtime
Time and one half the regular rate after a 7 hour day.
Time and one half the regular rate for Saturday.
Time and one half the regular rate for Sunday.

Overtime Holidays
Time and one half the regular rate for work on the following holiday(s).
New Year's Day
Lincoln's Birthday
Washington's Birthday
Memorial Day
Independence Day
Labor Day
Columbus Day
Election Day
Veteran's Day
Thanksgiving Day
Christmas Day

Paid Holidays
New Year's Day
Lincoln's Birthday
Washington's Birthday
Memorial Day
Independence Day
Labor Day
Columbus Day
Election Day
Veteran's Day
Thanksgiving Day
Christmas Day
Employees have the option of observing either Martin Luther King's Birthday or the day after Thanksgiving instead of Lincoln's Birthday

Shift Rates

For any workday that starts before 8A.M. or ends after 6P.M. there is a 10% differential for the applicable worker's hourly rate.

Vacation

After 6 months.....one week.
After 12 months but less than 7 years.....two weeks.
After 7 or more but less than 15 years.....three weeks.
After 15 years or more but less than 25 years.....four weeks.

(C.W.A.)

TILE FINISHER

Tile Finisher

Effective Period: 7/1/2017 - 6/30/2018
Wage Rate per Hour: $41.13
Supplemental Benefit Rate per Hour: $31.18

Overtime

Time and one half the regular rate after a 7 hour day.
Time and one half the regular rate for Saturday.
Double time the regular rate for Sunday.

Overtime Holidays

Double time the regular rate for work on the following holiday(s).
New Year's Day
President's Day
Good Friday
Memorial Day
Independence Day
Labor Day
Columbus Day
Veteran's Day
Thanksgiving Day
Day after Thanksgiving
Christmas Day

Paid Holidays

None

Shift Rates

Off shift work day (work performed outside the regular 8:00 A.M. to 3:30 P.M. workday): shift differential of one and one quarter (1¼) times the regular straight time rate of pay for the seven hours of actual off-shift work.

(Local #7)

TILE LAYER - SETTER

Tile Layer - Setter

Effective Period: 7/1/2017 - 6/30/2018
Wage Rate per Hour: $53.19
Supplemental Benefit Rate per Hour: $35.35

Overtime
Time and one half the regular rate after a 7 hour day.
Time and one half the regular rate for Saturday.
Double time the regular rate for Sunday.

Overtime Holidays
Double time the regular rate for work on the following holiday(s).
New Year's Day
President's Day
Good Friday
Memorial Day
Independence Day
Labor Day
Columbus Day
Veteran's Day
Thanksgiving Day
Day after Thanksgiving
Christmas Day

Shift Rates
Off shift work day (work performed outside the regular 8:00 A.M. to 3:30 P.M. workday): shift differential of one and one quarter (1¼) times the regular straight time rate of pay for the seven hours of actual off-shift work.

(Local #7)

TIMBERPERSON

Timberperson

Effective Period: 7/1/2017 - 6/30/2018
Wage Rate per Hour: $48.00
Supplemental Benefit Rate per Hour: $49.16

Overtime
Time and one half the regular rate after an 8 hour day.
Time and one half the regular rate for Saturday.
Double time the regular rate for Sunday.
Saturday may be used as a make-up day at straight time when a day is lost during that week to inclement weather.
Time and one half the regular hourly rate after 40 hours in any work week.

Overtime Holidays
Double time the regular rate for work on the following holiday(s).
New Year's Day
President's Day
Memorial Day
Independence Day
Labor Day
Columbus Day
Presidential Election Day
Thanksgiving Day
Christmas Day

Paid Holidays
None

Shift Rates
Off shift work commencing between 5:00 P.M. and 11:00 P.M. shall work eight and one half hours allowing for one half hour for lunch. The wage rate shall be 113% of the straight time hourly wage rate.

(Local #1536)

TUNNEL WORKER

Blasters, Mucking Machine Operators (Compressed Air Rates)

Effective Period: 7/1/2017 - 6/30/2018
Wage Rate per Hour: $62.37
Supplemental Benefit Rate per Hour: $52.39

Tunnel Workers (Compressed Air Rates)

Effective Period: 7/1/2017 - 6/30/2018
Wage Rate per Hour: $60.21
Supplemental Benefit Rate per Hour: $50.65

Top Nipper (Compressed Air Rates)

Effective Period: 7/1/2017 - 6/30/2018

Wage Rate per Hour: $59.11
Supplemental Benefit Rate per Hour: $49.74

Outside Lock Tender, Outside Gauge Tender,Muck Lock Tender (Compressed Air Rates)

Effective Period: 7/1/2017 - 6/30/2018
Wage Rate per Hour: $58.04
Supplemental Benefit Rate per Hour: $48.81

Bottom Bell & Top Bell Signal Person: Shaft Person (Compressed Air Rates)

Effective Period: 7/1/2017 - 6/30/2018
Wage Rate per Hour: $58.04
Supplemental Benefit Rate per Hour: $48.81

Changehouse Attendant: Powder Watchperson (Compressed Air Rates)

Effective Period: 7/1/2017 - 6/30/2018
Wage Rate per Hour: $50.87
Supplemental Benefit Rate per Hour: $46.11

Blasters (Free Air Rates)

Effective Period: 7/1/2017 - 6/30/2018
Wage Rate per Hour: $59.52
Supplemental Benefit Rate per Hour: $50.03

Tunnel Workers (Free Air Rates)

Effective Period: 7/1/2017 - 6/30/2018
Wage Rate per Hour: $56.97
Supplemental Benefit Rate per Hour: $47.89

All Others (Free Air Rates)

Effective Period: 7/1/2017 - 6/30/2018
Wage Rate per Hour: $52.63
Supplemental Benefit Rate per Hour: $44.29

Microtunneling (Free Air Rates)

Effective Period: 7/1/2017 - 6/30/2018
Wage Rate per Hour: $45.58
Supplemental Benefit Rate per Hour: $38.31

Overtime Description

For Repair-Maintenance Work on Existing Equipment and Facilities - Time and one half the regular rate after a 7 hour day, or for Saturday, or for Sunday. Double time the regular rate for work on a holiday.
For Small-Bore Micro Tunneling Machines - Time and one-half the regular rate shall be paid for all overtime.

Overtime

Double time the regular rate after an 8 hour day.
Double time the regular time rate for Saturday.
Double time the regular rate for Sunday.
Double time the regular rate for work on the following holiday(s).

Paid Holidays

New Year's Day
Lincoln's Birthday
President's Day
Memorial Day
Independence Day
Labor Day
Columbus Day
Election Day
Veteran's Day
Thanksgiving Day
Christmas Day

(Local #147)

WELDER
TO BE PAID AT THE RATE OF THE JOURNEYPERSON IN THE TRADE PERFORMING THE WORK.

OFFICE OF THE COMPTROLLER

CITY OF NEW YORK

220 APPRENTICESHIP PREVAILING WAGE SCHEDULE

APPENDIX

Pursuant to Labor Law §220 (3-e), only apprentices who are individually registered in a bona fide program to which the employer contractor is a participant and registered with the New York State Department of Labor, may be employed on a public work project.

Any employee listed on a payroll at an apprentice wage rate, who is not registered as above, shall be paid the journey person wage rate for the classification of work he actually performed.

Apprentice ratios are established to ensure the proper safety, training and supervision of apprentices. A ratio establishes the number of journey workers required for each apprentice in a program and on a job site. Ratios are interpreted as follows: in the case of a 1:1, 1:4 ratio, there must be one journey worker for the first apprentice, and four additional journey workers for each subsequent apprentice.

TABLE OF CONTENTS

CLASSIFICATION	PAGE
ASBESTOS HANDLER	3
BOILERMAKER	3
BRICKLAYER	4
CARPENTER	5
CARPENTER - HIGH RISE CONCRETE FORMS	6
CEMENT MASON	7
CEMENT AND CONCRETE WORKER	7
DERRICKPERSON & RIGGER (STONE)	8
DOCKBUILDER/PILE DRIVER	9
ELECTRICIAN	10
ELEVATOR CONSTRUCTOR	12
ELEVATOR REPAIR & MAINTENANCE	13
ENGINEER	14
ENGINEER - OPERATING	15
FLOOR COVERER	16
GLAZIER	16
HEAT & FROST INSULATOR	17
HOUSE WRECKER	18
IRON WORKER - ORNAMENTAL	18
IRON WORKER - STRUCTURAL	19
LABORER (FOUNDATION, CONCRETE, EXCAVATING, STREET PIPE LAYER & COMMON)	20
MARBLE MECHANICS	21
MASON TENDER	22
METALLIC LATHER	23
MILLWRIGHT	23
PAVER AND ROADBUILDER	24
PAINTER	24
PAINTER - METAL POLISHER	25
PAINTER - STRUCTURAL STEEL	26
PLASTERER	26
PLASTERER - TENDER	27
PLUMBER	28
POINTER, WATERPROOFER, CAULKER, SANDBLASTER, STEAMBLASTER	29
ROOFER	30
SHEET METAL WORKER	30
SIGN ERECTOR	32
STEAMFITTER	33
STONE MASON - SETTER	34
TAPER	35
TILE LAYER - SETTER	35
TIMBERPERSON	36

ASBESTOS HANDLER
(Ratio of Apprentice Journeyperson: 1 to 1, 1 to 3)

Asbestos Handler (First 1000 Hours)

Effective Period: 7/1/2017 - 6/30/2018
Wage Rate Per Hour: 78% of Journeyperson's rate
Supplemental Benefit Rate Per Hour: $14.25

Asbestos Handler (Second 1000 Hours)

Effective Period: 7/1/2017 - 6/30/2018
Wage Rate Per Hour: 80% of Journeyperson's rate
Supplemental Benefit Rate Per Hour: $14.25

Asbestos Handler (Third 1000 Hours)

Effective Period: 7/1/2017 - 6/30/2018
Wage Rate Per Hour: 83% of Journeyperson's rate
Supplemental Benefit Rate Per Hour: $14.25

Asbestos Handler (Fourth 1000 Hours)

Effective Period: 7/1/2017 - 6/30/2018
Wage Rate Per Hour: 89% of Journeyperson's rate
Supplemental Benefit Rate Per Hour: $14.25

(Local #78)

BOILERMAKER
(Ratio of Apprentice to Journeyperson: 1 to 1, 1 to 3)

Boilermaker (First Year)

Effective Period: 7/1/2017 - 6/30/2018
Wage Rate Per Hour: 65% of Journeyperson's rate
Supplemental Benefit Rate Per Hour: $30.84
Effective 1/1/2018 - Supplemental Benefit Rate Per Hour: $31.26

Boilermaker (Second Year: 1st Six Months)

Effective Period: 7/1/2017 - 6/30/2018

Wage Rate Per Hour: 70% of Journeyperson's rate
Supplemental Benefit Rate Per Hour: $32.57
Effective 1/1/2018 - Supplemental Benefit Rate Per Hour: $33.02

Boilermaker (Second Year: 2nd Six Months)

Effective Period: 7/1/2017 - 6/30/2018
Wage Rate Per Hour: 75% of Journeyperson's rate
Supplemental Benefit Rate Per Hour: $34.29
Effective 1/1/2018 - Supplemental Benefit Rate Per Hour: $34.78

Boilermaker (Third Year: 1st Six Months)

Effective Period: 7/1/2017 - 6/30/2018
Wage Rate Per Hour: 80% of Journeyperson's rate
Supplemental Benefit Rate Per Hour: $36.03
Effective 1/1/2018- Supplemental Benefit Rate Per Hour: $36.56

Boilermaker (Third Year: 2nd Six Months)

Effective Period: 7/1/2017 - 6/30/2018
Wage Rate Per Hour: 85% of Journeyperson's rate
Supplemental Benefit Rate Per Hour: $37.76
Effective 1/1/2018 - Supplemental Benefit Rate Per Hour: $38.32

Boilermaker (Fourth Year: 1st Six Months)

Effective Period: 7/1/2017 - 6/30/2018
Wage Rate Per Hour: 90% of Journeyperson's rate
Supplemental Benefit Rate Per Hour: $39.51
Effective 1/1/2018 - Supplemental Benefit Rate Per Hour: $40.09

Boilermaker (Fourth Year: 2nd Six Months)

Effective Period: 7/1/2017 - 6/30/2018
Wage Rate Per Hour: 95% of Journeyperson's rate
Supplemental Benefit Rate Per Hour: $41.22
Effective 1/1/2018- Supplemental Benefit Rate Per Hour: $41.84

(Local #5)

BRICKLAYER
(Ratio of Apprentice to Journeyperson: 1 to 1, 1 to 4)

Bricklayer (First 750 Hours)

Effective Period: 7/1/2017 - 6/30/2018
Wage Rate Per Hour: 50% of Journeyperson's rate
Supplemental Benefit Rate Per Hour: $18.80

Bricklayer (Second 750 Hours)

Effective Period: 7/1/2017 - 6/30/2018
Wage Rate Per Hour: 60% of Journeyperson's rate
Supplemental Benefit Rate Per Hour: $18.80

Bricklayer (Third 750 Hours)

Effective Period: 7/1/2017 - 6/30/2018
Wage Rate Per Hour: 70% of Journeyperson's rate
Supplemental Benefit Rate Per Hour: $18.80

Bricklayer (Fourth 750 Hours)

Effective Period: 7/1/2017 - 6/30/2018
Wage Rate Per Hour: 80% of Journeyperson's rate
Supplemental Benefit Rate Per Hour: $18.80

Bricklayer (Fifth 750 Hours)

Effective Period: 7/1/2017 - 6/30/2018
Wage Rate Per Hour: 90% of Journeyperson's rate
Supplemental Benefit Rate Per Hour: $18.80

Bricklayer (Sixth 750 Hours)

Effective Period: 7/1/2017 - 6/30/2018
Wage Rate Per Hour: 95% of Journeyperson's rate
Supplemental Benefit Rate Per Hour: $18.80

(Bricklayer District Council)

CARPENTER
(Ratio of Apprentice to Journeyperson: 1 to 1, 1 to 4)

Carpenter (First Year)

Effective Period: 7/1/2017 - 6/30/2018
Wage Rate Per Hour: 40% of Journeyperson's rate
Supplemental Benefit Rate Per Hour For Building Apprentice: $31.34

Supplemental Benefit Rate Per Hour For Heavy Apprentice: $33.03

Carpenter (Second Year)

Effective Period: 7/1/2017 - 6/30/2018
Wage Rate Per Hour: 50% of Journeyperson's rate
Supplemental Benefit Rate Per Hour For Building Apprentice: $31.34
Supplemental Benefit Rate Per Hour For Heavy Apprentice: $33.03

Carpenter (Third Year)

Effective Period: 7/1/2017 - 6/30/2018
Wage Rate Per Hour: 65% of Journeyperson's rate
Supplemental Benefit Rate Per Hour For Building Apprentice: $31.34
Supplemental Benefit Rate Per Hour For Heavy Apprentice: $33.03

Carpenter (Fourth Year)

Effective Period: 7/1/2017 - 6/30/2018
Wage Rate Per Hour: 80% of Journeyperson's rate
Supplemental Benefit Rate Per Hour For Building Apprentice: $31.34
Supplemental Benefit Rate Per Hour For Heavy Apprentice: $33.03

(Carpenters District Council)

CARPENTER - HIGH RISE CONCRETE FORMS
(Ratio of Apprentice to Journeyperson: 1 to 1, 2 to 5)

Carpenter - High Rise (First Year)

Effective Period: 7/1/2017 - 6/30/2018
Wage Rate per Hour: $16.86
Supplemental Benefit Rate per Hour: $16.20

Carpenter - High Rise (Second Year)

Effective Period: 7/1/2017 - 6/30/2018
Wage Rate per Hour: $23.16
Supplemental Benefit Rate per Hour: $16.33

Carpenter - High Rise (Third Year)

Effective Period: 7/1/2017 - 6/30/2018
Wage Rate per Hour: $29.61

Supplemental Benefit Rate per Hour: $16.46

Carpenter - High Rise (Fourth Year)

Effective Period: 7/1/2017 - 6/30/2018
Wage Rate per Hour: $37.07
Supplemental Benefit Rate per Hour: $16.61

(Carpenters District Council)

CEMENT MASON
(Ratio of Apprentice to Journeyperson: 1 to 1, 1 to 4)

Cement Mason (First Year)

Effective Period: 7/1/2017 - 6/30/2018
Wage and Supplemental Rate Per Hour: 50% of Journeyperson's Rate

Cement Mason (Second Year)

Effective Period: 7/1/2017 - 6/30/2018
Wage and Supplemental Rate Per Hour: 60% of Journeyperson's Rate

Cement Mason (Third Year)

Effective Period: 7/1/2017 - 6/30/2018
Wage and Supplemental Rate Per Hour: 70% of Journeyperson's Rate

(Local #780)

CEMENT AND CONCRETE WORKER
(Ratio of Apprentice to Journeyperson: 1 to 1, 1 to 3)

Cement & Concrete Worker (First 1333 hours)

Effective Period: 7/1/2017 - 6/30/2018
Wage Rate Per Hour: 50% of Journeyperson's rate
Supplemental Benefit Rate Per Hour: $17.75

Cement & Concrete Worker (Second 1333 hours)

Effective Period: 7/1/2017 - 6/30/2018
Wage Rate Per Hour: 65% of Journeyperson's rate
Supplemental Benefit Rate Per Hour: $23.03

Cement & Concrete Worker (Last 1334 hours)

Effective Period: 7/1/2017 - 6/30/2018
Wage Rate Per Hour: 80% of Journeyperson's rate
Supplemental Benefit Rate Per Hour: $24.30

Cement & Concrete Worker (Hired after 2/6/2016 - First 1334 hours)

Effective Period: 7/1/2017 - 6/30/2018
Wage Rate Per Hour: $16.96
Supplemental Benefit Rate Per Hour: $11.80

Cement & Concrete Worker (Hired after 2/6/2016 - Second 1334 hours)

Effective Period: 7/1/2017 - 6/30/2018
Wage Rate Per Hour: $22.08
Supplemental Benefit Rate Per Hour: $16.49

Cement & Concrete Worker (Hired after 2/6/2016 - Last 1334 hours)

Effective Period: 7/1/2017 - 6/30/2018
Wage Rate Per Hour: $27.20
Supplemental Benefit Rate Per Hour: $17.33

(Cement Concrete Workers District Council)

DERRICKPERSON & RIGGER (STONE)
(Ratio of Apprentice to Journeyperson: 1 to 1, 1 to 4)

Derrickperson & Rigger (stone) - First Year

Effective Period: 7/1/2017 - 6/30/2018
Wage Rate Per Hour: 50% of Journeyperson's rate
Supplemental Benefit Rate Per Hour: 50% of Journeyperson's rate

Derrickperson & Rigger (stone) - Second Year: 1st Six Months

Effective Period: 7/1/2017 - 6/30/2018
Wage Rate Per Hour: 70% of Journeyperson's rate

Supplemental Benefit Rate Per Hour: 75% of Journeyperson's rate

Derrickperson & Rigger (stone) - Second Year: 2nd Six Months

Effective Period: 7/1/2017 - 6/30/2018
Wage Rate Per Hour: 80% of Journeyperson's rate
Supplemental Benefit Rate Per Hour: 75% of Journeyperson's rate

Derrickperson & Rigger (stone) - Third Year

Effective Period: 7/1/2017 - 6/30/2018
Wage Rate Per Hour: 90% of Journeyperson's rate
Supplemental Benefit Rate Per Hour: 75% of Journeyperson's rate

(Local #197)

DOCKBUILDER/PILE DRIVER
(Ratio of Apprentice to Journeyperson: 1 to 1, 1 to 6)

Dockbuilder/Pile Driver (First Year)

Effective Period: 7/1/2017 - 6/30/2018
Wage Rate Per Hour: 40% of Journeyperson's rate
Supplemental Benefit Rate Per Hour: $33.03

Dockbuilder/Pile Driver (Second Year)

Effective Period: 7/1/2017 - 6/30/2018
Wage Rate Per Hour: 50% of Journeyperson's rate
Supplemental Benefit Rate Per Hour: $33.03

Dockbuilder/Pile Driver (Third Year)

Effective Period: 7/1/2017 - 6/30/2018
Wage Rate Per Hour: 65% of Journeyperson's rate
Supplemental Benefit Rate Per Hour: $33.03

Dockbuilder/Pile Driver (Fourth Year)

Effective Period: 7/1/2017 - 6/30/2018
Wage Rate Per Hour: 80% of Journeyperson's rate
Supplemental Benefit Rate Per Hour: $33.03

(Carpenters District Council)

ELECTRICIAN
(Ratio of Apprentice to Journeyperson: 1 to 1, 1 to 3)

Electrician (First Term: 0-6 Months)

Effective Period: 7/1/2017 - 5/9/2018
Wage Rate per Hour: $14.00
Supplemental Benefit Rate per Hour: $12.37
Overtime Supplemental Rate Per Hour: $13.29

Effective Period: 5/10/2018 - 6/30/2018
Wage Rate per Hour: $14.50
Supplemental Benefit Rate per Hour: $12.63
Overtime Supplemental Rate Per Hour: $13.58

Electrician (First Term: 7-12 Months)

Effective Period: 7/1/2017 - 5/9/2018
Wage Rate per Hour: $15.00
Supplemental Benefit Rate per Hour: $12.88
Overtime Supplemental Rate Per Hour: $13.87

Effective Period: 5/10/2018 - 6/30/2018
Wage Rate per Hour: $15.50
Supplemental Benefit Rate per Hour: $13.14
Overtime Supplemental Rate Per Hour: $14.16

Electrician (Second Term: 0-6 Months)

Effective Period: 7/1/2017 - 5/9/2018
Wage Rate per Hour: $16.00
Supplemental Benefit Rate per Hour: $13.39
Overtime Supplemental Rate Per Hour: $14.44

Effective Period: 5/10/2018 - 6/30/2018
Wage Rate per Hour: $16.50
Supplemental Benefit Rate per Hour: $13.64
Overtime Supplemental Rate Per Hour: $14.73

Electrician (Second Term: 7-12 Months)

Effective Period: 7/1/2017 - 5/9/2018
Wage Rate per Hour: $17.00
Supplemental Benefit Rate per Hour: $13.90

Overtime Supplemental Rate Per Hour: $15.02

Effective Period: 5/10/2018 - 6/30/2018
Wage Rate per Hour: $17.50
Supplemental Benefit Rate per Hour: $14.15
Overtime Supplemental Rate Per Hour: $15.31

Electrician (Third Term: 0-6 Months)

Effective Period: 7/1/2017 - 5/9/2018
Wage Rate per Hour: $18.00
Supplemental Benefit Rate per Hour: $14.41
Overtime Supplemental Rate Per Hour: $15.59

Effective Period: 5/10/2018 - 6/30/2018
Wage Rate per Hour: $18.50
Supplemental Benefit Rate per Hour: $14.66
Overtime Supplemental Rate Per Hour: $15.88

Electrician (Third Term: 7-12 Months)

Effective Period: 7/1/2017 - 5/9/2018
Wage Rate per Hour: $19.00
Supplemental Benefit Rate per Hour: $14.92
Overtime Supplemental Rate Per Hour: $16.17

Effective Period: 5/10/2018 - 6/30/2018
Wage Rate per Hour: $19.50
Supplemental Benefit Rate per Hour: $15.17
Overtime Supplemental Rate Per Hour: $16.45

Electrician (Fourth Term: 0-6 Months)

Effective Period: 7/1/2017 - 5/9/2018
Wage Rate per Hour: $20.00
Supplemental Benefit Rate per Hour: $15.43
Overtime Supplemental Rate Per Hour: $16.74

Effective Period: 5/10/2018 - 6/30/2018
Wage Rate per Hour: $20.50
Supplemental Benefit Rate per Hour: $15.68
Overtime Supplemental Rate Per Hour: $17.03

Electrician (Fourth Term: 7-12 Months)

Effective Period: 7/1/2017 - 5/9/2018
Wage Rate per Hour: $22.00
Supplemental Benefit Rate per Hour: $16.44
Overtime Supplemental Rate Per Hour: $17.89

Effective Period: 5/10/2018 - 6/30/2018
Wage Rate per Hour: $22.50
Supplemental Benefit Rate per Hour: $16.70
Overtime Supplemental Rate Per Hour: $18.18

Electrician (Fifth Term: 0-12 Months)

Effective Period: 7/1/2017 - 5/9/2018
Wage Rate per Hour: $24.00
Supplemental Benefit Rate per Hour: $19.80
Overtime Supplemental Rate Per Hour: $21.30

Effective Period: 5/10/2018 - 6/30/2018
Wage Rate per Hour: $24.50
Supplemental Benefit Rate per Hour: $20.30
Overtime Supplemental Rate Per Hour: $21.84

Electrician (Fifth Term: 13-18 Months)

Effective Period: 7/1/2017 - 5/9/2018
Wage Rate per Hour: $28.50
Supplemental Benefit Rate per Hour: $22.10
Overtime Supplemental Rate Per Hour: $23.89

Effective Period: 5/10/2018 - 6/30/2018
Wage Rate per Hour: $29.00
Supplemental Benefit Rate per Hour: $22.65
Overtime Supplemental Rate Per Hour: $24.47

Overtime Description
Overtime Wage paid at time and one half the regular rate

(Local #3)

ELEVATOR CONSTRUCTOR
(Ratio of Apprentice to Journeyperson: 1 to 1, 1 to 2)

Elevator (Constructor) - First Year

Effective Period: 7/1/2017 - 3/16/2018
Wage Rate Per Hour: 50% of Journeyperson's rate
Supplemental Rate Per Hour: $29.88

Effective Period: 3/17/2018 - 6/30/2018

Wage Rate Per Hour: 50% of Journeyperson's rate
Supplemental Rate Per Hour: $31.35

Elevator (Constructor) - Second Year

Effective Period: 7/1/2017 - 3/16/2018
Wage Rate Per Hour: 55% of Journeyperson's rate
Supplemental Rate Per Hour: $30.31

Effective Period: 3/17/2018 - 6/30/2018
Wage Rate Per Hour: 55% of Journeyperson's rate
Supplemental Rate Per Hour: $31.80

Elevator (Constructor) - Third Year

Effective Period: 7/1/2017 - 3/16/2018
Wage Rate Per Hour: 65% of Journeyperson's rate
Supplemental Rate Per Hour: $31.19

Effective Period: 3/17/2018 - 6/30/2018
Wage Rate Per Hour: 65% of Journeyperson's rate
Supplemental Rate Per Hour: $32.70

Elevator (Constructor) - Fourth Year

Effective Period: 7/1/2017 - 3/16/2018
Wage Rate Per Hour: 75% of Journeyperson's rate
Supplemental Rate Per Hour: $32.07

Effective Period: 3/17/2018 - 6/30/2018
Wage Rate Per Hour: 75% of Journeyperson's rate
Supplemental Rate Per Hour: $33.60

(Local #1)

ELEVATOR REPAIR & MAINTENANCE
(Ratio of Apprentice to Journeyperson: 1 to 1, 1 to 2)

Elevator Service/Modernization Mechanic (First Year)

Effective Period: 7/1/2017 - 3/16/2018
Wage Rate Per Hour: 50% of Journeyperson's rate
Supplemental Benefit Per Hour: $29.80

Effective Period: 3/17/2018 - 6/30/2018
Wage Rate Per Hour: 50% of Journeyperson's rate

Supplemental Benefit Per Hour: $31.28

Elevator Service/Modernization Mechanic (Second Year)

Effective Period: 7/1/2017 - 3/16/2018
Wage Rate Per Hour: 55% of Journeyperson's rate
Supplemental Benefit Per Hour: $30.23

Effective Period: 3/17/2018 - 6/30/2018
Wage Rate Per Hour: 55% of Journeyperson's rate
Supplemental Benefit Per Hour: $31.72

Elevator Service/Modernization Mechanic (Third Year)

Effective Period: 7/1/2017 - 3/16/2018
Wage Rate Per Hour: 65% of Journeyperson's rate
Supplemental Benefit Per Hour: $31.09

Effective Period: 3/17/2018 - 6/30/2018
Wage Rate Per Hour: 65% of Journeyperson's rate
Supplemental Benefit Per Hour: $32.60

Elevator Service/Modernization Mechanic (Fourth Year)

Effective Period: 7/1/2017 - 3/16/2018
Wage Rate Per Hour: 75% of Journeyperson's rate
Supplemental Benefit Per Hour: $31.95

Effective Period: 3/17/2018 - 6/30/2018
Wage Rate Per Hour: 75% of Journeyperson's rate
Supplemental Benefit Per Hour: $33.49

(Local #1)

ENGINEER
(Ratio of Apprentice to Journeyperson: 1 to 1, 1 to 5)

Engineer - First Year

Effective Period: 7/1/2017 - 6/30/2018
Wage Rate per Hour: $24.77
Supplemental Benefit Rate per Hour: $24.62

Engineer - Second Year

Effective Period: 7/1/2017 - 6/30/2018
Wage Rate per Hour: $30.97
Supplemental Benefit Rate per Hour: $24.62

Engineer - Third Year

Effective Period: 7/1/2017 - 6/30/2018
Wage Rate per Hour: $34.06
Supplemental Benefit Rate per Hour: $24.62

Engineer - Fourth Year

Effective Period: 7/1/2017 - 6/30/2018
Wage Rate per Hour: $37.16
Supplemental Benefit Rate per Hour: $24.62

(Local #15)

ENGINEER - OPERATING
(Ratio of Apprentice to Journeyperson: 1 to 1, 1 to 5)

Operating Engineer - First Year

Effective Period: 7/1/2017 - 6/30/2018
Wage Rate Per Hour 40% of Journeyperson's Rate
Supplemental Benefit Per Hour: $20.85

Operating Engineer - Second Year

Effective Period: 7/1/2017 - 6/30/2018
Wage Rate Per Hour: 50% of Journeyperson's Rate
Supplemental Benefit Per Hour: $20.85

Operating Engineer - Third Year

Effective Period: 7/1/2017 - 6/30/2018
Wage Rate Per Hour: 60% of Journeyperson's Rate
Supplemental Benefit Per Hour: $20.85

(Local #14)

FLOOR COVERER
(Ratio of Apprentice to Journeyperson: 1 to 1, 1 to 4)

Floor Coverer (First Year)

Effective Period: 7/1/2017 - 6/30/2018
Wage Rate Per Hour: 40% of Journeyperson's rate
Supplemental Rate Per Hour: $31.14

Floor Coverer (Second Year)

Effective Period: 7/1/2017 - 6/30/2018
Wage Rate Per Hour: 50% of Journeyperson's rate
Supplemental Rate Per Hour: $31.14

Floor Coverer (Third Year)

Effective Period: 7/1/2017 - 6/30/2018
Wage Rate Per Hour: 65% of Journeyperson's rate
Supplemental Rate Per Hour: $31.14

Floor Coverer (Fourth Year)

Effective Period: 7/1/2017 - 6/30/2018
Wage Rate Per Hour: 80% of Journeyperson's rate
Supplemental Rate Per Hour: $31.14

(Carpenters District Council)

GLAZIER
(Ratio of Apprentice to Journeyperson: 1 to 1, 1 to 3)

Glazier (First Year)

Effective Period: 7/1/2017 - 6/30/2018
Wage Rate Per Hour: 40% of Journeyperson's rate
Supplemental Rate Per Hour: $15.26

Glazier (Second Year)

Effective Period: 7/1/2017 - 6/30/2018
Wage Rate Per Hour: 50% of Journeyperson's rate

Supplemental Rate Per Hour: $25.36

Glazier (Third Year)

Effective Period: 7/1/2017 - 6/30/2018
Wage Rate Per Hour: 60% of Journeyperson's rate
Supplemental Rate Per Hour: $28.62

Glazier (Fourth Year)

Effective Period: 7/1/2017 - 6/30/2018
Wage Rate Per Hour: 80% of Journeyperson's rate
Supplemental Rate Per Hour: $34.67

(Local #1281)

HEAT & FROST INSULATOR
(Ratio of Apprentice to Journeyperson: 1 to 1, 1 to 3)

Heat & Frost Insulator (First Year)

Effective Period: 7/1/2017 - 6/30/2018
Wage and Supplemental Rate Per Hour: 40% of Journeyperson's rate

Heat & Frost Insulator (Second Year)

Effective Period: 7/1/2017 - 6/30/2018
Wage and Supplemental Rate Per Hour: 60% of Journeyperson's rate

Heat & Frost Insulator (Third Year)

Effective Period: 7/1/2017 - 6/30/2018
Wage and Supplemental Rate Per Hour: 70% of Journeyperson's rate

Heat & Frost Insulator (Fourth Year)

Effective Period: 7/1/2017 - 6/30/2018
Wage and Supplemental Rate Per Hour: 80% of Journeyperson's rate

(Local #12)

HOUSE WRECKER
(TOTAL DEMOLITION)
(Ratio of Apprentice to Journeyperson: 1 to 1, 1 to 3)

House Wrecker - First Year

Effective Period: 7/1/2017 - 6/30/2018
Wage Rate per Hour: $21.17
Supplemental Benefit Rate per Hour: $18.54

House Wrecker - Second Year

Effective Period: 7/1/2017 - 6/30/2018
Wage Rate per Hour: $22.32
Supplemental Benefit Rate per Hour: $18.54

House Wrecker - Third Year

Effective Period: 7/1/2017 - 6/30/2018
Wage Rate per Hour: $23.97
Supplemental Benefit Rate per Hour: $18.54

House Wrecker - Fourth Year

Effective Period: 7/1/2017 - 6/30/2018
Wage Rate per Hour: $26.53
Supplemental Benefit Rate per Hour: $18.54

(Mason Tenders District Council)

IRON WORKER - ORNAMENTAL
(Ratio of Apprentice to Journeyperson: 1 to 1, 1 to 4)

Iron Worker (Ornamental) - 1st Ten Months

Effective Period: 7/1/2017 - 6/30/2018
Wage Rate Per Hour: 50% of Journeyperson's rate
Supplemental Rate Per Hour: $39.40

Iron Worker (Ornamental) - 11 -16 Months

Effective Period: 7/1/2017 - 6/30/2018
Wage Rate Per Hour: 55% of Journeyperson's rate
Supplemental Rate Per Hour: $40.62

Iron Worker (Ornamental) - 17 - 22 Months

Effective Period: 7/1/2017 - 6/30/2018
Wage Rate Per Hour: 60% of Journeyperson's rate
Supplemental Rate Per Hour: $41.83

Iron Worker (Ornamental) - 23 - 28 Months

Effective Period: 7/1/2017 - 6/30/2018
Wage Rate Per Hour: 70% of Journeyperson's rate
Supplemental Rate Per Hour: $44.27

Iron Worker (Ornamental) - 29 - 36 Months

Effective Period: 7/1/2017 - 6/30/2018
Wage Rate Per Hour: 80% of Journeyperson's rate
Supplemental Rate Per Hour: $46.70

(Local #580)

IRON WORKER - STRUCTURAL
(Ratio of Apprentice to Journeyperson: 1 to 1, 1 to 6)

Iron Worker (Structural) - 1st Six Months

Effective Period: 7/1/2017 - 6/30/2018
Wage Rate per Hour: $26.12
Supplemental Benefit Rate per Hour: $50.22

Iron Worker (Structural) - 7- 18 Months

Effective Period: 7/1/2017 - 6/30/2018
Wage Rate per Hour: $26.72
Supplemental Benefit Rate per Hour: $50.22

Iron Worker (Structural) - 19 - 36 months

Effective Period: 7/1/2017 - 6/30/2018
Wage Rate per Hour: $27.32

Supplemental Benefit Rate per Hour: $50.22

(Local #40 and #361)

LABORER (FOUNDATION, CONCRETE, EXCAVATING, STREET PIPE LAYER & COMMON)

(Ratio Apprentice to Journeyperson: 1 to 1, 1 to 3)

Laborer (Foundation, Concrete, Excavating, Street Pipe Layer & Common) - First 1000 hours

Effective Period: 7/1/2017 - 6/30/2018
Wage Rate Per Hour: 50% of Journeyperson's rate
Supplemental Rate Per Hour: $40.63

Laborer (Foundation, Concrete, Excavating, Street Pipe Layer & Common) - Second 1000 hours

Effective Period: 7/1/2017 - 6/30/2018
Wage Rate Per Hour: 60% of Journeyperson's rate
Supplemental Rate Per Hour: $40.63

Laborer (Foundation, Concrete, Excavating, Street Pipe Layer & Common) - Third 1000 hours

Effective Period: 7/1/2017 - 6/30/2018
Wage Rate Per Hour: 75% of Journeyperson's rate
Supplemental Rate Per Hour: $40.63

Laborer (Foundation, Concrete, Excavating, Street Pipe Layer & Common) - Fourth 1000 hours

Effective Period: 7/1/2017 - 6/30/2018
Wage Rate Per Hour: 90% of Journeyperson's rate
Supplemental Rate Per Hour: $40.63

(Local #731)

MARBLE MECHANICS
(Ratio of Apprentice to Journeyperson: 1 to 1, 1 to 4)

Cutters & Setters - First 750 Hours

Effective Period: 7/1/2017 - 6/30/2018
Wage and Supplemental Rate Per Hour: 50% of Journeyperson's rate

NO BENEFITS PAID DURING THE FIRST TWO MONTHS (PROBATIONARY PERIOD)

Cutters & Setters - Second 750 Hours

Effective Period: 7/1/2017 - 6/30/2018
Wage and Supplemental Rate Per Hour: 55% of Journeyperson's rate

Cutters & Setters - Third 750 Hours

Effective Period: 7/1/2017 - 6/30/2018
Wage and Supplemental Rate Per Hour: 65% of Journeyperson's rate

Cutters & Setters - Fourth 750 Hours

Effective Period: 7/1/2017 - 6/30/2018
Wage and Supplemental Rate Per Hour: 75% of Journeyperson's rate

Cutters & Setters - Fifth 750 Hours

Effective Period: 7/1/2017 - 6/30/2018
Wage and Supplemental Rate Per Hour: 85% of Journeyperson's rate

Cutters & Setters - Sixth 750 Hours

Effective Period: 7/1/2017 - 6/30/2018
Wage and Supplemental Rate Per Hour: 95% of Journeyperson's rate

Polishers & Finishers - First 750 Hours

Effective Period: 7/1/2017 - 6/30/2018
Wage and Supplemental Rate Per Hour: 50% of Journeyperson's rate

NO BENEFITS PAID DURING THE FIRST TWO MONTHS (PROBATIONARY PERIOD)

Polishers & Finishers - Second 750 Hours

Effective Period: 7/1/2017 - 6/30/2018
Wage and Supplemental Rate Per Hour: 60% of Journeyperson's rate

Polishers & Finishers - Third 750 Hours

Effective Period: 7/1/2017 - 6/30/2018
Wage and Supplemental Rate Per Hour: 75% of Journeyperson's rate

Polishers & Finishers - Fourth 750 Hours

Effective Period: 7/1/2017 - 6/30/2018
Wage and Supplemental Rate Per Hour: 90% of Journeyperson's rate

(Local #7)

MASON TENDER
(Ratio of Apprentice to Journeyperson: 1 to 1, 1 to 3)

Mason Tender - First Year

Effective Period: 7/1/2017 - 6/30/2018
Wage Rate per Hour: $21.39
Supplemental Benefit Rate per Hour: $19.65

Mason Tender - Second Year

Effective Period: 7/1/2017 - 6/30/2018
Wage Rate per Hour: $22.54
Supplemental Benefit Rate per Hour: $19.65

Mason Tender - Third Year

Effective Period: 7/1/2017 - 6/30/2018
Wage Rate per Hour: $24.29
Supplemental Benefit Rate per Hour: $19.70

Mason Tender - Fourth Year

Effective Period: 7/1/2017 - 6/30/2018
Wage Rate per Hour: $26.95
Supplemental Benefit Rate per Hour: $19.70

(Local #79)

METALLIC LATHER
(Ratio of Apprentice to Journeyperson: 1 to 1, 1 to 3)

Metallic Lather (First Year)

Effective Period: 7/1/2017 - 6/30/2018
Wage Rate per Hour: $28.38
Supplemental Benefit Rate per Hour: $10.96

Metallic Lather (Second Year)

Effective Period: 7/1/2017 - 6/30/2018
Wage Rate per Hour: $32.38
Supplemental Benefit Rate per Hour: $12.96

Metallic Lather (Third Year)

Effective Period: 7/1/2017 - 6/30/2018
Wage Rate per Hour: $35.38
Supplemental Benefit Rate per Hour: $17.12

Metallic Lather (Fourth Year)

Effective Period: 7/1/2017 - 6/30/2018
Wage Rate per Hour: $37.38
Supplemental Benefit Rate per Hour: $17.92

(Local #46)

MILLWRIGHT
(Ratio of Apprentice to Journeyperson: 1 to 1, 1 to 4)

Millwright (First Year)

Effective Period: 7/1/2017 - 6/30/2018
Wage Rate per Hour: $28.33
Supplemental Benefit Rate per Hour: $34.28

Millwright (Second Year)

Effective Period: 7/1/2017 - 6/30/2018
Wage Rate per Hour: $33.48
Supplemental Benefit Rate per Hour: $37.88

Millwright (Third Year)

Effective Period: 7/1/2017 - 6/30/2018
Wage Rate per Hour: $38.63
Supplemental Benefit Rate per Hour: $42.13

Millwright (Fourth Year)

Effective Period: 7/1/2017 - 6/30/2018
Wage Rate per Hour: $48.93
Supplemental Benefit Rate per Hour: $48.69

(Local #740)

PAVER AND ROADBUILDER
(Ratio of Apprentice to Journeyperson: 1 to 1, 1 to 3)

Paver and Roadbuilder - First Year (Minimum 1000 hours)

Effective Period: 7/1/2017 - 6/30/2018
Wage Rate per Hour: $27.86
Supplemental Benefit Rate per Hour: $19.25

Paver and Roadbuilder - Second Year (Minimum 1000 hours)

Effective Period: 7/1/2017 - 6/30/2018
Wage Rate per Hour: $29.50
Supplemental Benefit Rate per Hour: $19.25

(Local #1010)

PAINTER
(Ratio of Apprentice to Journeyperson: 1 to 1, 1 to 3)

Painter - Brush & Roller - First Year

Effective Period: 7/1/2017 - 6/30/2018
Wage Rate per Hour: $17.00
Supplemental Benefit Rate per Hour: $13.42

Painter - Brush & Roller - Second Year

Effective Period: 7/1/2017 - 6/30/2018
Wage Rate per Hour: $21.25
Supplemental Benefit Rate per Hour: $17.43

Painter - Brush & Roller - Third Year

Effective Period: 7/1/2017 - 6/30/2018
Wage Rate per Hour: $25.50
Supplemental Benefit Rate per Hour: $20.50

Painter - Brush & Roller - Fourth Year

Effective Period: 7/1/2017 - 6/30/2018
Wage Rate per Hour: $34.00
Supplemental Benefit Rate per Hour: $26.20

(District Council of Painters)

PAINTER - METAL POLISHER
(Ratio of Apprentice to Journeyperson: 1 to 1, 1 to 3)

Metal Polisher (First Year)

Effective Period: 7/1/2017 - 6/30/2018
Wage Rate per Hour: $11.75
Supplemental Benefit Rate per Hour: $5.13

Metal Polisher (Second Year)

Effective Period: 7/1/2017 - 6/30/2018
Wage Rate per Hour: $13.00
Supplemental Benefit Rate per Hour: $5.13

Metal Polisher (Third Year)

Effective Period: 7/1/2017 - 6/30/2018
Wage Rate per Hour: $15.75
Supplemental Benefit Rate per Hour: $5.13

(Local 8A-28)

PAINTER - STRUCTURAL STEEL
(Ratio of Apprentice to Journeyperson: 1 to 1, 1 to 3)

Painters - Structural Steel (First Year)

Effective Period: 7/1/2017 - 6/30/2018
Wage and Supplemental Rate Per Hour: 40% of Journeyperson's rate

Painters - Structural Steel (Second Year)

Effective Period: 7/1/2017 - 6/30/2018
Wage and Supplemental Rate Per Hour: 60% of Journeyperson's rate

Painters - Structural Steel (Third Year)

Effective Period: 7/1/2017 - 6/30/2018
Wage and Supplemental Rate Per Hour: 80% of Journeyperson's rate

(Local #806)

PLASTERER
(Ratio of Apprentice to Journeyperson: 1 to 1, 1 to 3)

Plasterer - First Year: 1st Six Months

Effective Period: 7/1/2017 - 6/30/2018
Wage Rate Per Hour: 40% of Journeyperson's rate
Supplemental Rate Per Hour: $13.59

Plasterer - First Year: 2nd Six Months

Effective Period: 7/1/2017 - 6/30/2018
Wage Rate Per Hour: 45% of Journeyperson's rate
Supplemental Rate Per Hour: $14.07

Plasterer - Second Year: 1st Six Months

Effective Period: 7/1/2017 - 6/30/2018
Wage Rate Per Hour: 55% of Journeyperson's rate
Supplemental Rate Per Hour: $16.04

Plasterer - Second Year: 2nd Six Months

Effective Period: 7/1/2017 - 6/30/2018
Wage Rate Per Hour: 60% of Journeyperson's rate
Supplemental Rate Per Hour: $17.12

Plasterer - Third Year: 1st Six Months

Effective Period: 7/1/2017 - 6/30/2018
Wage Rate Per Hour: 70% of Journeyperson's rate
Supplemental Rate Per Hour: $19.29

Plasterer - Third Year: 2nd Six Months

Effective Period: 7/1/2017 - 6/30/2018
Wage Rate Per Hour: 75% of Journeyperson's rate
Supplemental Rate Per Hour: $20.37

(Local #530)

PLASTERER - TENDER
(Ratio of Apprentice to Journeyperson: 1 to 1, 1 to 3)

Plasterer Tender - First Year

Effective Period: 7/1/2017 - 6/30/2018
Wage Rate per Hour: $21.39
Supplemental Benefit Rate per Hour: $19.65

Plasterer Tender - Second Year

Effective Period: 7/1/2017 - 6/30/2018
Wage Rate per Hour: $22.54

Supplemental Benefit Rate per Hour: $19.65

Plasterer Tender - Third Year

Effective Period: 7/1/2017 - 6/30/2018
Wage Rate per Hour: $24.29
Supplemental Benefit Rate per Hour: $19.70

Plasterer Tender - Fourth Year

Effective Period: 7/1/2017 - 6/30/2018
Wage Rate per Hour: $26.95
Supplemental Benefit Rate per Hour: $19.70

(Local #79)

PLUMBER
(Ratio of Apprentice to Journeyperson: 1 to 1, 1 to 3)

Plumber - First Year: 1st Six Months

Effective Period: 7/1/2017 - 6/30/2018
Wage Rate per Hour: $16.28
Supplemental Benefit Rate per Hour: $5.43

Plumber - First Year: 2nd Six Months

Effective Period: 7/1/2017 - 6/30/2018
Wage Rate per Hour: $19.28
Supplemental Benefit Rate per Hour: $6.43

Plumber - Second Year

Effective Period: 7/1/2017 - 6/30/2018
Wage Rate per Hour: $26.35
Supplemental Benefit Rate per Hour: $17.10

Plumber - Third Year

Effective Period: 7/1/2017 - 6/30/2018
Wage Rate per Hour: $28.45
Supplemental Benefit Rate per Hour: $17.10

Plumber - Fourth Year

Effective Period: 7/1/2017 - 6/30/2018
Wage Rate per Hour: $31.30
Supplemental Benefit Rate per Hour: $17.10

Plumber - Fifth Year: 1st Six Months

Effective Period: 7/1/2017 - 6/30/2018
Wage Rate per Hour: $32.70
Supplemental Benefit Rate per Hour: $17.10

Plumber - Fifth Year: 2nd Six Months

Effective Period: 7/1/2017 - 6/30/2018
Wage Rate per Hour: $44.77
Supplemental Benefit Rate per Hour: $17.10

(Plumbers Local #1)

POINTER, WATERPROOFER, CAULKER, SANDBLASTER, STEAMBLASTER
(Exterior Building Renovation)
(Ratio of Apprentice to Journeyperson: 1 to 1, 1 to 4)

Pointer, Waterproofer, Caulker, Sandblaster, Steamblaster - First Year

Effective Period: 7/1/2017 - 6/30/2018
Wage Rate per Hour: $25.89
Supplemental Benefit Rate per Hour: $13.64

Pointer, Waterproofer, Caulker, Sandblaster, Steamblaster - Second Year

Effective Period: 7/1/2017 - 6/30/2018
Wage Rate per Hour: $28.97
Supplemental Benefit Rate per Hour: $18.15

Pointer, Waterproofer, Caulker, Sandblaster, Steamblaster - Third Year

Effective Period: 7/1/2017 - 6/30/2018
Wage Rate per Hour: $34.12
Supplemental Benefit Rate per Hour: $20.90

Pointer, Waterproofer, Caulker, Sandblaster, Steamblaster - Fourth Year

Effective Period: 7/1/2017 - 6/30/2018
Wage Rate per Hour: $41.33
Supplemental Benefit Rate per Hour: $21.60

(Bricklayer District Council)

ROOFER
(Ratio of Apprentice to Journeyperson: 1 to 1, 1 to 2)

Roofer - First Year

Effective Period: 7/1/2017 - 6/30/2018
Wage and Supplemental Rate Per Hour: 35% of Journeyperson's Rate

Roofer - Second Year

Effective Period: 7/1/2017 - 6/30/2018
Wage and Supplemental Rate Per Hour: 50% of Journeyperson's Rate

Roofer - Third Year

Effective Period: 7/1/2017 - 6/30/2018
Wage and Supplemental Rate Per Hour: 60% of Journeyperson's Rate

Roofer - Fourth Year

Effective Period: 7/1/2017 - 6/30/2018
Wage and Supplemental Rate Per Hour: 75% of Journeyperson's Rate

(Local #8)

SHEET METAL WORKER
(Ratio of Apprentice to Journeyperson: 1 to 1, 1 to 3)

Sheet Metal Worker (0-6 Months)

Effective Period: 7/1/2017 - 6/30/2018
Wage Rate Per Hour: 25% of Journeyperson's rate
Supplemental Rate Per Hour: $6.35

Sheet Metal Worker (7-18 Months)

Effective Period: 7/1/2017 - 6/30/2018
Wage Rate Per Hour: 35% of Journeyperson's rate
Supplemental Rate Per Hour: $17.12

Sheet Metal Worker (19-30 Months)

Effective Period: 7/1/2017 - 6/30/2018
Wage Rate Per Hour: 45% of Journeyperson's rate
Supplemental Rate Per Hour: $23.54

Sheet Metal Worker (31-36 Months)

Effective Period: 7/1/2017 - 6/30/2018
Wage Rate Per Hour: 55% of Journeyperson's rate
Supplemental Rate Per Hour: $27.70

Sheet Metal Worker (37-42 Months)

Effective Period: 7/1/2017 - 6/30/2018
Wage Rate Per Hour: 60% of Journeyperson's rate
Supplemental Rate Per Hour: $29.11

Sheet Metal Worker (43-48 Months)

Effective Period: 7/1/2017 - 6/30/2018
Wage Rate Per Hour: 70% of Journeyperson's rate
Supplemental Rate Per Hour: $33.96

Sheet Metal Worker (49-54 Months)

Effective Period: 7/1/2017 - 6/30/2018
Wage Rate Per Hour: 75% of Journeyperson's rate
Supplemental Rate Per Hour: $36.07

Sheet Metal Worker (55-60 Months)

Effective Period: 7/1/2017 - 6/30/2018
Wage Rate Per Hour: 80% of Journeyperson's rate
Supplemental Rate Per Hour: $38.15

(Local #28)

SIGN ERECTOR
(Ratio of Apprentice to Journeyperson: 1 to 1, 1 to 4)

Sign Erector - First Year: 1st Six Months

Effective Period: 7/1/2017 - 6/30/2018
Wage Rate Per Hour: 35% of Journeyperson's rate
Supplemental Rate Per Hour: $14.72

Sign Erector - First Year: 2nd Six Months

Effective Period: 7/1/2017 - 6/30/2018
Wage Rate Per Hour: 40% of Journeyperson's rate
Supplemental Rate Per Hour: $16.71

Sign Erector - Second Year: 1st Six Months

Effective Period: 7/1/2017 - 6/30/2018
Wage Rate Per Hour: 45% of Journeyperson's rate
Supplemental Rate Per Hour: $18.68

Sign Erector - Second Year: 2nd Six Months

Effective Period: 7/1/2017 - 6/30/2018
Wage Rate Per Hour: 50% of Journeyperson's rate
Supplemental Rate Per Hour: $20.68

Sign Erector - Third Year: 1st Six Months

Effective Period: 7/1/2017 - 6/30/2018
Wage Rate Per Hour: 55% of Journeyperson's rate
Supplemental Rate Per Hour: $27.72

Sign Erector - Third Year: 2nd Six Months

Effective Period: 7/1/2017 - 6/30/2018
Wage Rate Per Hour: 60% of Journeyperson's rate
Supplemental Rate Per Hour: $30.57

Sign Erector - Fourth Year: 1st Six Months

Effective Period: 7/1/2017 - 6/30/2018
Wage Rate Per Hour: 65% of Journeyperson's rate
Supplemental Rate Per Hour: $33.31

Sign Erector - Fourth Year: 2nd Six Months

Effective Period: 7/1/2017 - 6/30/2018
Wage Rate Per Hour: 70% of Journeyperson's rate
Supplemental Rate Per Hour: $35.83

Sign Erector - Fifth Year

Effective Period: 7/1/2017 - 6/30/2018
Wage Rate Per Hour: 75% of Journeyperson's rate
Supplemental Rate Per Hour: $38.32

Sign Erector - Sixth Year

Effective Period: 7/1/2017 - 6/30/2018
Wage Rate Per Hour: 80% of Journeyperson's rate
Supplemental Rate Per Hour: $40.81

(Local #137)

STEAMFITTER
(Ratio of Apprentice to Journeyperson: 1 to 1, 1 to 3)

Steamfitter - First Year

Effective Period: 7/1/2017 - 6/30/2018
Wage Rate and Supplemental Per Hour: 40% of Journeyperson's rate

Steamfitter - Second Year

Effective Period: 7/1/2017 - 6/30/2018
Wage Rate and Supplemental Rate Per Hour: 50% of Journeyperson's rate.

Steamfitter - Third Year

Effective Period: 7/1/2017 - 6/30/2018
Wage Rate and Supplemental Rate per Hour: 65% of Journeyperson's rate.

Steamfitter - Fourth Year

Effective Period: 7/1/2017 - 6/30/2018
Wage Rate and Supplemental Rate Per Hour: 80% of Journeyperson's rate.

Steamfitter - Fifth Year

Effective Period: 7/1/2017 - 6/30/2018
Wage Rate and Supplemental Rate Per Hour: 85% of Journeyperson's rate.

(Local #638)

STONE MASON - SETTER
(Ratio Apprentice of Journeyperson: 1 to 1, 1 to 2)

Stone Mason - Setters - First 750 Hours

Effective Period: 7/1/2017 - 6/30/2018
Wage and Supplemental Rate Per Hour: 50% of Journeyperson's rate

Stone Mason - Setters - Second 750 Hours

Effective Period: 7/1/2017 - 6/30/2018
Wage Rate Per Hour: 60% of Journeyperson's rate
Supplemental Rate Per Hour: 50% of Journeyperson's rate

Stone Mason - Setters - Third 750 Hours

Effective Period: 7/1/2017 - 6/30/2018
Wage Rate Per Hour: 70% of Journeyperson's rate
Supplemental Rate Per Hour: 50% of Journeyperson's rate

Stone Mason - Setters - Fourth 750 Hours

Effective Period: 7/1/2017 - 6/30/2018
Wage Rate Per Hour: 80% of Journeyperson's rate
Supplemental Rate Per Hour: 50% of Journeyperson's rate

Stone Mason - Setters - Fifth 750 Hours

Effective Period: 7/1/2017 - 6/30/2018
Wage Rate Per Hour: 90% of Journeyperson's rate
Supplemental Rate Per Hour: 50% of Journeyperson's rate

Stone Mason - Setters - Sixth 750 Hours

Effective Period: 7/1/2017 - 6/30/2018
Wage Rate Per Hour: 100% of Journeyperson's rate
Supplemental Rate Per Hour: 50% of Journeyperson's rate

(Bricklayers District Council)

TAPER
(Ratio of Apprentice to Journeyperson: 1 to 1, 1 to 4)

Drywall Taper - First Year

Effective Period: 7/1/2017 - 6/30/2018
Wage and Supplemental Rate Per Hour: 40% of Journeyperson's rate

Drywall Taper - Second Year

Effective Period: 7/1/2017 - 6/30/2018
Wage and Supplemental Rate Per Hour: 60% of Journeyperson's rate

Drywall Taper - Third Year

Effective Period: 7/1/2017 - 6/30/2018
Wage and Supplemental Rate Per Hour: 80% of Journeyperson's rate

(Local #1974)

TILE LAYER - SETTER
(Ratio of Apprentice to Journeyperson: 1 to 1, 1 to 4)

Tile Layer - Setter - First 750 Hours

Effective Period: 7/1/2017 - 6/30/2018
Wage and Supplemental Rate Per Hour: 50% of Journeyperson's rate

Tile Layer - Setter - Second 750 Hours

Effective Period: 7/1/2017 - 6/30/2018
Wage and Supplemental Rate Per Hour: 55% of Journeyperson's rate

Tile Layer - Setter - Third 750 Hours

Effective Period: 7/1/2017 - 6/30/2018
Wage and Supplemental Rate Per Hour: 65% of Journeyperson's rate

Tile Layer - Setter - Fourth 750 Hours

Effective Period: 7/1/2017 - 6/30/2018
Wage and Supplemental Rate Per Hour: 75% of Journeyperson's rate

Tile Layer - Setter - Fifth 750 Hours

Effective Period: 7/1/2017 - 6/30/2018
Wage and Supplemental Rate Per Hour: 85% of Journeyperson's rate

Tile Layer - Setter - Sixth 750 Hours

Effective Period: 7/1/2017 - 6/30/2018
Wage and Supplemental Rate Per Hour: 95% of Journeyperson's rate

(Local #7)

TIMBERPERSON
(Ratio of Apprentice to Journeyperson: 1 to 1, 1 to 6)

Timberperson - First Year

Effective Period: 7/1/2017 - 6/30/2018
Wage Rate Per Hour: 40% of Journeyperson's rate
Supplemental Rate Per Hour: $32.79

Timberperson - Second Year

Effective Period: 7/1/2017 - 6/30/2018
Wage Rate Per Hour: 50% of Journeyperson's rate
Supplemental Rate Per Hour: $32.79

Timberperson - Third Year

Effective Period: 7/1/2017 - 6/30/2018
Wage Rate Per Hour: 65% of Journeyperson's rate
Supplemental Rate Per Hour: $32.79

Timberperson - Fourth Year

Effective Period: 7/1/2017 - 6/30/2018
Wage Rate Per Hour: 80% of Journeyperson's rate
Supplemental Rate Per Hour: $32.79

(Local #1536)

(NO TEXT ON THIS PAGE)

THE CITY OF NEW YORK
OFFICE OF THE COMPTROLLER
1 CENTRE STREET ROOM 1120
NEW YORK, N.Y. 10007-2341

TELEPHONE: (212) 669-3622
FAX NUMBER: (212) 669-8495

Leonard A. Mancusi
SENIOR ASSISTANT COMPTROLLER

ALAN G. HEVESI
COMPTROLLER

MEMORANDUM

November 6, 2000

To *Agency Chief Contracting Officers*

From: *Leonard A. Mancusi*

Re: *Security at Construction Sites*

Prior to the enactment of Administrative Code §6-109, security guards on construction sites were not subject to prevailing wages. Security guards under the New York State labor law are covered under §230 which provides that prevailing wages are to be paid for security guards in existing buildings. §6-109 of the Administrative Code which was enacted in 1996 closed this loophole by including all security guards working pursuant to a city contract as a prevailing wage trade.

Although some construction contract boilerplate language has been amended to include §6-109, sub-contractors performing security services have advised us that they were not aware of this provision and, since traditionally, security guards were not a covered trade on construction sites, and they were not advised by a prime contractor that they would have to pay prevailing wages, they have not been doing so.

To avoid the possibility of issuing stop payments against prime contractors for the failure of their security service sub-contractors to pay

prevailing wages, we suggest that you write to all your existing security guard sub-contractors and their primes and in the future, upon approval of a security guard sub-contractor, advise the contractors of their obligation to pay prevailing wages under §6-109 of the Administrative Code.

As always, your cooperation is appreciated.

-LAM:er
ACCO.SECURITY AT SITES

Department of Design and Construction

INFRASTRUCTURE DIVISION
BUREAU OF DESIGN

VOLUME 2 OF 3

_____

Contractor

_____

Dated_____, 20___

_____

APPROVED AS TO FORM
CERTIFIED AS TO LEGAL AUTHORITY

_____

Acting Corporation Counsel

_____

Dated_____, 20___

_____

Department of Design and Construction

INFRASTRUCTURE DIVISION
BUREAU OF DESIGN

VOLUME 2 OF 3

PROJECT ID: SEK201BN7

RECONSTRUCTION OF COLLAPSED OR DEFECTIVE SANITARY, STORM OR COMBINED SEWERS VITRIFIED CLAY PIPE IN VARIOUS LOCATIONS IN BROOKLYN

Together With All Work Incidental Thereto
BOROUGH OF BROOKLYN
CITY OF NEW YORK

Perfetto Enterprises Co., Inc.
Contractor

Dated December 12, **20** 17

APPROVED AS TO FORM
CERTIFIED AS TO LEGAL AUTHORITY

Acting Corporation Counsel

8/22/17

Dated August 22, **20** 17

Department of Design and Construction

THE CITY OF NEW YORK
DEPARTMENT OF DESIGN AND CONSTRUCTION
DIVISION OF INFRASTRUCTURE

30-30 THOMSON AVENUE
LONG ISLAND CITY, NEW YORK 11101-3045
TELEPHONE (718) 391-1000
WEBSITE www1.nyc.gov/site/ddc/index.page

VOLUME 3 OF 3

SCHEDULE A SPECIFICATIONS AND REVISIONS TO STANDARD SPECIFICATIONS

FOR FURNISHING ALL LABOR AND MATERIALS NECESSARY AND REQUIRED FOR:

PROJECT ID: SEK201BN7

RECONSTRUCTION OF COLLAPSED OR DEFECTIVE SANITARY, STORM OR COMBINED SEWERS VITRIFIED CLAY PIPE IN VARIOUS LOCATIONS IN BROOKLYN

Together With All Work Incidental Thereto
BOROUGH OF BROOKLYN
CITY OF NEW YORK

FOR THE DEPARTMENT OF ENVIRONMENTAL PROTECTION
PREPARED BY
IN-HOUSE DESIGN

AUGUST 3, 2017

18-007

Project ID: SEK201BN7

VOLUME 3 OF 3

TABLE OF CONTENTS

SECTION	DESCRIPTION	PAGES
SPECIFICATIONS AND STANDARDS OF NEW YORK CITY		1 OF 2 AND 2 OF 2
SCHEDULE A	GENERAL CONDITIONS TO CONSTRUCTION CONTRACT	SA-1 to SA-12
R - PAGES	REVISIONS TO STANDARD SPECIFICATIONS	R-1 to R-2
SW - PAGES	SEWER AND WATER MAIN SPECIFICATIONS	SW-1 to SW-35
EP7 – PAGES	GAS COST SHARING (EP-7) STANDARD SPECIFICATIONS	EP7-1 to EP7-28B

(NO TEXT ON THIS PAGE)

SPECIFICATIONS AND STANDARDS OF NEW YORK CITY

The following New York City Department of Transportation (NYCDOT) reference documents are available on-line at:
http://www1.nyc.gov/site/ddc/resources/publications.page or for purchase between 9:00 A.M. and 3:00 P.M. at 55 Water St., Ground Floor, NYC, N.Y. 10041. Contact: Ms. Vivian Valdez, Tel. (212) 839-9434

1. NYCDOT Standard Highway Specifications, August 1, 2015
2. NYCDOT Standard Highway Details of Construction, July 1, 2010

The following New York City Department of Transportation (NYCDOT) reference documents are available on-line at:
http://www.nyc.gov/html/dot/html/about/dotlibrary.shtml#spec or for purchase between 9:00 A.M. and 3:00 P.M. at 55 Water St., Ground Floor, NYC, N.Y. 10041. Contact: Ms. Vivian Valdez, Tel. (212) 839-9434

1. Specifications for furnishing all labor and material necessary and required for the installation, removal or relocation of street lighting equipment in the City of New York, 1992.
2. Standard Drawings, Division of Street Lighting
3. Specifications for Traffic Signals and Intelligent Transportation Systems Construction and Equipment
4. Standard Drawings for Traffic Signals

The following reference documents for New York City Department of Environmental Protection (NYCDEP) are available on-line at:
http://www1.nyc.gov/site/ddc/resources/publications.page or for pick up between 8:00 A.M. and 4:00 P.M. at 30-30 Thomson Avenue, 3rd Floor, Division of Infrastructure, Long Island City, N.Y. 11101.
Contact: Mr. Nader Soliman, Tel. (718) 391-1179

1. NYCDEP Standard Sewer and Water Main Specifications, July 1, 2014
2. NYCDEP Instructions for Concrete Specifications, Jan. 92
3. NYCDEP General Specification 11-Concrete, November 1991
4. NYCDEP Sewer Design Standards, (September 2007) Revised January 2009

The following reference documents for New York City Department of Environmental Protection (NYCDEP) are available on-line at:
http://www1.nyc.gov/site/ddc/resources/publications.page or for pick up between 8:00 A.M. and 4:00 P.M. at 30-30 Thomson Avenue, 3rd Floor, Division of Infrastructure, Long Island City, N.Y. 11101.
Contact: Mr. Robert Kuhlmann, Tel. (718) 391-2145

1. NYCDEP Water Main Standard Drawings, November 2010
2. Specifications for Trunk Main Work, July 2014
3. Standards for Green Infrastructure, latest version, available only on-line at:
http://www.nyc.gov/html/dep/html/stormwater/green_infrastructure_standards.shtml

Water main work material specifications are available at the Department of Environmental Protection, 59-17 Junction Boulevard, 3rd Floor Low-Rise Building, Flushing, N.Y. 11373-5108.
Contact: Mr. Tarlock Sahansra, P.E., Tel. (718) 595-5302
E-mail: TSAHANSRA@DEP.NYC.GOV

SPECIFICATIONS AND STANDARDS OF NEW YORK CITY

Standard Specifications and Drawings for New York City Fire Department Communications facilities are available from the FDNY Facilities Management Bureau, Plant Operations Engineering, 316 Sgt. Beers Avenue Cluster 1 Box 16, Fort Totten, N.Y. 11359.
Contact: Mr. Ed Durkin, Tel. (718) 281-3933

Tree Planting Standards of the City of New York Parks & Recreation are available at the following Department of Parks & Recreation website:
http://www.nycgovparks.org/pagefiles/53/Tree-Planting-Standards.pdf

SPECIFICATIONS AND STANDARDS OF PRIVATE UTILITIES

The Following reference document for Private Utility Work is available for pick up between 8:30 A.M. and 4:00 P.M. at 30-30 Thomson Avenue, First Floor Bid Procurement Room, L.I.C., N.Y. 11101.

1. CET SPECIFICATIONS AND SKETCHES dated November 2010

SCHEDULE A

(GENERAL CONDITIONS TO CONSTRUCTION CONTRACT (INCLUDING GENERAL CONDITIONS RELATED TO ARTICLE 22 – INSURANCE)

PART I. REQUIRED INFORMATION

INFORMATION FOR BIDDERS SECTION 26 BID SECURITY The **Contractor** shall obtain a bid security in the amount indicated to the right.	Required provided the TOTAL BID PRICE set forth on the Bid Form is $1,000,000. or more. Certified Check: 2% of Bid Amount or Bond: 10% of Bid Amount
INFORMATION FOR BIDDERS SECTION 26 PERFORMANCE AND PAYMENT BONDS The **Contractor** shall obtain performance and payment bonds in the amount indicated to the right.	Required for contracts in the amount of $1,000,000 or more. Performance Security and Payment Security shall each be in an amount equal to 100% of the Contract Price.
INFORMATION FOR BIDDERS DEPARTMENT OF DESIGN AND CONSTRUCTION SAFETY REQUIREMENTS The **Contractor** shall provide the safety personnel as indicated to the right.	■ Project Safety Representative ■ Dedicated, full-time Project Safety Manager
CONTRACT ARTICLE 14 DATE FOR SUBSTANTIAL COMPLETION The **Contractor** shall substantially complete the **Work** in the number of calendar days indicated to the right.	See Page SA-4
CONTRACT ARTICLE 15 LIQUIDATED DAMAGES If the **Contractor** fails to substantially complete the **Work** within the time fixed for substantial completion plus authorized time extensions or if the **Contractor**, in the sole determination of the **Commissioner**, has abandoned the **Work**, the **Contractor** shall pay to the **City** the amount indicated to the right.	See Article 15 as amended in the SEWER AND WATER MAIN REVISIONS TO SPECIFICATIONS (SW – PAGES) page SW-5 in volume 3 of 3 of this contract.
CONTRACT ARTICLE 17. SUB-CONTRACTOR The **Contractor** shall not make subcontracts totaling an amount more than the percentage of the total **Contract** price indicated to the right.	Not to exceed 35 % of the **Contract** price

CONTRACT ARTICLE 21. RETAINAGE The **Commissioner** shall deduct and retain until the substantial completion of the **Work** the percent value of the **Work** indicated to the right.	5 % of the value of the **Work**
CONTRACT ARTICLE 22. (Per Directions Below)	See pages SA-5 through SA-12
CONTRACT ARTICLE 24. DEPOSIT GUARANTEE As security for the faithful performance of its obligations, the **Contractor**, upon filing its requisition for payment on **Substantial Completion**, shall deposit with the **Commissioner** a sum equal to the percentage of the **Contract** price indicated to the right.	1% of **Contract** price
CONTRACT ARTICLE 24. PERIOD OF GUARANTEE Periods of maintenance and guarantee other than the period set forth in Article 24.1 are indicated to the right.	Eighteen (18) Months, excluding Trees Twenty-four (24) Months for Tree Planting
CONTRACT ARTICLE 74. STATEMENT OF WORK The **Contractor** shall furnish all labor and materials and perform all **Work** in strict accordance with the **Contract Drawings**, **Specifications**, and all **Addenda** thereto, as **shown in the column to the right.**	**Addenda**, numbered: 0
CONTRACT ARTICLE 75. COMPENSATION TO BE PAID TO CONTRACTOR The **City** shall pay and the **Contractor** shall accept in full consideration for the performance of the **Contract**, subject to additions and deductions as provided herein, the total sum **shown in the column to the right,** being the amount at which the **Contract** was awarded to the **Contractor** at a public letting thereof, based upon the **Contractor's** bid for the **Contract.**	Amount for which the **Contract** was Awarded: Seven million, two hundred thousand Dollars ($ 7,200,000.00)
CONTRACT ARTICLE 79. PARTICIPATION BY MINORITY-OWNED AND WOMEN-OWNED BUSINESS ENTERPRISES IN CITY PROCUREMENT	See M/WBE Utilization Plan in the Bid Booklet

STANDARD HIGHWAY SPECIFICATIONS SECTION 6.40 LIQUIDATED DAMAGES FOR ENGINEER'S FIELD OFFICE If the Contractor fails to satisfactorily provide the field office and all equipment specified in **Section 6.40 - Engineer's Field Office**, and/or if a cited deficiency exceed seventy two (72) hours after notice from the Engineer in writing, or is permitted to recur, liquidated damages will be assessed in the amount specified herein for each subsequent calendar day or part thereof that a cited deficiency resulting in nonpayment, as described in **Section 6.40.5**, is not corrected.	For Each Calendar Day of Deficiency: $500.00
STANDARD HIGHWAY SPECIFICATIONS SECTION 6.70 LIQUIDATED DAMAGES FOR MAINTENANCE AND PROTECTION OF TRAFFIC	$ 250.00 for each instance of failure to comply with the Maintenance and Protection of Traffic requirements within three (3) hours after written notice from the Engineer. $ 500.00 for each and every hour of failing to open the entire width of roadway to traffic the morning following a night/weekend work operation.
STANDARD HIGHWAY SPECIFICATIONS SECTION 7.13 LIQUIDATED DAMAGES FOR MAINTENANCE OF SITE If the Contractor fails to comply, within three (3) consecutive hours after written notice from the Engineer, with the requirements of **Section 7.13 - Maintenance of Site**, the Contractor shall pay to the City of New York, until such notice has been complied with or rescinded, the sum specified above per calendar day, for each instance of such failure, as liquidated damages and not as a penalty, for such default.	$ 250.00 for each calendar day, for each occurrence

Date for Substantial Completion (Reference: Article 14)

The Contractor shall substantially complete the Work within the Final Contract Duration determined in accordance with the terms and conditions set forth herein.

The Base Contract Duration for this project is 545 consecutive calendar days ("ccds").
The Final Contract Duration shall be the Base Contract Duration when a check mark is indicated before the word "NO", below, and shall be the Base Contract Duration adjusted by the table set forth below when a check mark is indicated before the word "YES", below.

√ YES _____ NO

When the Final Contract Duration is indicated above to be adjusted by the table below, the table may increase the Base Contract Duration depending on the date of scheduled substantial completion to avoid a scheduled substantial completion of the Work during the winter months. The date of scheduled substantial completion shall be determined by adding the Base Contract Duration to the date specified to commence work in the written Notice to Proceed. The Final Contract Duration shall then be determined as follows:

(a) Find the row that corresponds to the month of substantial completion based on the Base Contract Duration added to the date specified to commence work in the written Notice to Proceed.
(b) Find the number of days to be added to the Base Contract Duration in the table below. Add that number of days to the Base Contract Duration to obtain the Final Contract Duration in consecutive calendar days.

Month of Substantial Completion based on the Base Contract Duration	Number of Days of adjustment
January	150
February	120
March	90
April	60
May	30
June	0
July	0
August	0
September	0
October	0
November –December 15	0
December 16 – December 31	180

In addition, should Item No. 9.30, "Storm Water Pollution Prevention," exist in the Contract and the required Storm Water Pollution Prevention Plan (SWPPP) does not conform to NYSDEC's recommended Standards, an additional 60 ccd shall be added to the above Final Contract Duration.

(GENERAL CONDITIONS RELATING TO ARTICLE 22 – INSURANCE)

PART II. TYPES OF INSURANCE, MINIMUM LIMITS AND SPECIAL CONDITIONS

Note: All certificate(s) of insurance submitted pursuant to Contract Article 22.3. 3 must be accompanied by a Certification by Broker consistent with Part III below and include the following information:

- **For each insurance policy, the name and NAIC number of issuing company, number of policy, and effective dates;**
- **Policy limits consistent with the requirements listed below;**
- **Additional insureds or loss payees consistent with the requirements listed below; and**
- **The number assigned to the Contract by the City (in the "Description of Operations" field).**

Insurance indicated by a blackened box (■) or by X in a □ to left will be required under this contract

Types of Insurance (per Article 22 in its entirety, including listed paragraph)	Minimum Limits and Special Conditions
■ Commercial General Liability Art. 22.1.1	The minimum limits shall be $ 3,000,000 per occurrence and $ 6,000,000 per project aggregate applicable to this **Contract.** Additional Insureds: 1. City of New York, including its officials and employees, with coverage at least as broad as ISO Form CG 20 10 and CG 20 37, 2. All person(s) or organization(s), if any, that Article 22.1.1(b) of the **Contract** requires to be named as Additional Insured(s), with coverage at least as broad as ISO Form CG 20 26. The Additional Insured endorsement shall either specify the entity's name, if known, or the entity's title (e.g., Project Manager), 3. National Grid Energy Delivery

■ Workers' Compensation Art. 22.1.2 ■ Disability Benefits Insurance Art. 22.1.2 ■ Employers' Liability Art. 22.1.2 ☐ Jones Act Art. 22.1.3 ☐ U.S. Longshoremen's and Harbor Workers Compensation Act Art. 22.1.3	Workers' Compensation, Employers' Liability, and Disability Benefits Insurance: Statutory per New York State law without regard to jurisdiction. **Note:** The following forms are acceptable: (1) New York State Workers' Compensation Board Form No. C-105.2, (2) State Insurance Fund Form No. U-26.3, (3) New York State Workers' Compensation Board Form No. DB-120.1 and (4) Request for WC/DB Exemption Form No. CE-200. The City will not accept an ACORD form as proof of Workers' Compensation or Disability Insurance. Jones Act and U.S. Longshoremen's and Harbor Workers' Compensation Act: Statutory per U.S. Law. ☐ Additional Requirements:
☐ Builders' Risk Art. 22.1.4	☐ Required: 100% of total bid amount ☐ Required: 100 % of total bid amount for Item(s): **Contractor** the Named Insured; the **City** both an Additional Insured and one of the loss payees as its interests may appear. If the **Work** does not involve construction of a new building or gut renovation work, the **Contractor** may provide an installation floater in lieu of Builders Risk insurance. Note: Builders Risk Insurance may terminate upon **Substantial Completion** of the **Work** in its entirety.

■ Commercial Auto Liability Art. 22.1.5	$ 2,000,000 per accident combined single limit If vehicles are used for transporting hazardous materials, the **Contractor** shall provide pollution liability broadened coverage for covered vehicles (endorsement CA 99 48) as well as proof of MCS 90 Additional Insureds:
☐ Contractors Pollution Liability Art. 22.1.6	$ 5,000,000 per occurrence $ 5,000,000 aggregate Additional Insureds: 1. City of New York, including its officials and employees, and 2. _____ 3. _____
☐ Marine Protection and Indemnity Art. 22.1.7(a)	$_____ each occurrence $_____ aggregate Additional Insureds: 1. City of New York, including its officials and employees, and 2. _____ 3. _____
☐ Hull and Machinery Insurance Art. 22.1.7(b)	$_____ per occurrence $_____ aggregate Additional Insureds: 1. City of New York, including its officials and employees, and 2. _____ 3. _____

☐ Marine Pollution Liability Art. 22.1.7(c)	$ 1,000,000 per occurrence $ 1,000,000 aggregate Additional Insureds: 1. City of New York, including its officials and employees, and 2. _____ 3. _____
[OTHER] Art. 22.1.8 ☐ Railroad Protection Liability Policy (ISO-RIMA or equivalent form) approved by Permittor covering the work to be performed at the designated site and affording protection for damages arising out of bodily injury or death, physical damage to or destruction of property, including damage to the Insured's own property and conforming to the following: • Policy Endorsement CG 28 31 - Pollution Exclusion Amendment is required to be endorsed onto the policy when environmental-related work and/or exposures exist. • Indicate the Name and address of the Contractor to perform the work, the Contract # and the name of the railroad property where the work is being performed and the Agency Permit. • Evidence of Railroad Protective Liability Insurance, must be provided in the form of the Original Policy. A detailed Insurance Binder (ACORD or Manuscript Form) will be accepted pending issuance of the Original Policy, which must be provided within 30 days of the Binder Approval.	$ 2,000,000 per occurrence $ 6,000,000 annual aggregate Named Insureds: 1. 2.

[OTHER] Art. 22.1.8

☐ Professional Liability

A. The Contractor's Professional Engineer shall maintain and submit evidence of Professional Liability Insurance in the minimum amount of $1,000,000 per claim. The policy or policies shall include an endorsement to cover the liability assumed by the Contractor under this Contract arising out of the negligent performance of professional services or caused by an error, omission or negligent act of the Contractor's Professional Engineer or anyone employed by the Contractor's Professional Engineer.

B. Claims-made policies will be accepted for Professional Liability Insurance. All such policies shall have an extended reporting period option or automatic coverage of not less than two (2) years. If available as an option, the Contractor's Professional Engineer shall purchase extended reporting period coverage effective on cancellation or termination of such insurance unless a new policy is secured with a retroactive date, including at least the last policy year.

[OTHER] Art. 22.1.8 ☐ Engineer's Field Office **Section 6.40, Standard Highway Specifications**	Fire insurance, extended coverage and vandalism, malicious mischief and burglary, and theft insurance coverage in the amount of $40,000

[OTHER] Art. 22.1.8

☐ The Following Additional Insurance Must Be Provided:

Umbrella/Excess Liability Insurance - The Contractor shall provide Umbrella/Excess Liability Insurance in the minimum amount of $10,000,000 per Occurrence and $10,000,000 in Aggregate. The policy terms and condition should be at least as broad as the underlying policies. The underlying policies should comply with the insurance provision as outlined by the contract. Defense cost should be in addition to the limit of liability. The City of New York, including its officials and employees, should be included as additional insured as respects to the noted project.

SCHEDULE A
(GENERAL CONDITIONS TO CONSTRUCTION CONTRACT)
(GENERAL CONDITIONS RELATING TO ARTICLE 22 – INSURANCE)

PART III. CERTIFICATES OF INSURANCE

All certificates of insurance (except certificates of insurance solely evidencing Workers' Compensation Insurance, Employer's Liability Insurance, and/or Disability Benefits Insurance) must be accompanied by one of the following:

(1) the Certification by Insurance Broker or Agent on the following page setting forth the required information and signatures;

-- OR --

(2) copies of all policies as certified by an authorized representative of the issuing insurance carrier that are referenced in such certificate of insurance. If any policy is not available at the time of submission, certified binders may be submitted until such time as the policy is available, at which time a certified copy of the policy shall be submitted.

CITY OF NEW YORK

CERTIFICATION BY INSURANCE BROKER OR AGENT

The undersigned insurance broker represents to the City of New York that the attached Certificate of Insurance is accurate in all material respects.

_____
[Name of broker or agent (typewritten)]

_____
[Address of broker or agent (typewritten)]

_____
[Email address of broker or agent (typewritten)]

_____
[Phone number/Fax number of broker or agent (typewritten)]

_____
[Signature of authorized official, broker, or agent]

_____
[Name and title of authorized official, broker, or agent (typewritten)]

State of .....)
) ss.:
County of .....)

Sworn to before me this _____ day of _____, 20____

_____
NOTARY PUBLIC FOR THE STATE OF _____

SCHEDULE A

(GENERAL CONDITIONS TO CONSTRUCTION CONTRACT)

PART IV. ADDRESS OF COMMISSIONER

Wherever reference is made in Article 7 or Article 22 to documents to be sent to the **Commissioner** (e.g., notices, filings, or submissions), such documents shall be sent to the address set forth below or, in the absence of such address, to the **Commissioner's** address as provided elsewhere in this **Contract**.

DDC Director, Insurance Risk Manager

30 – 30 Thomson Avenue, 4th Floor (IDCNY Building)

Long Island City, NY 11101

(NO FURTHER TEXT ON THIS PAGE)

R - PAGES

REVISIONS TO STANDARD SPECIFICATIONS

NOTICE

The Specification Bulletin(s) ("SB(s)") referenced in this Section (R-Pages) may consist of revisions to the following Standard Specifications:

- New York City Department of Transportation ("NYC DOT") Standard Highway Specifications, dated 8/1/2015;
- New York City Department of Environmental Protection ("NYC DEP") Standard Sewer and Water Main Specifications, dated 7/1/2014; and
- NYC DEP Specifications for Trunk Main Work, dated 7/2014.

The SB(s) modify and supersede portions of the applicable Standard Specifications. The provisions contained in this Contract's I-Pages, S-Pages and SW-Pages may further modify the applicable Standard Specifications.

The following SB(s) are included as part of this contract:

- SB 16-001 – REVISIONS TO THE NYC DOT STANDARD HIGHWAY SPECIFICATIONS.
- SB 16-002 – REVISIONS TO THE NYC DEP STANDARD SEWER AND WATER MAIN SPECIFICATIONS.
- SB 17-001 – UV CURED-IN-PLACE-PIPE (CIPP) LINING METHOD
- SB 17-002 – RODENT AND WATERBUG PEST CONTROL
- SB 17-003 – ENGINEERS FIELD OFFICE
- SB 17-004 – FIRE DEPARTMENT FACILITIES
- SB 17-005 – DIGITAL PHOTOGRAPHS
- SB 17-006 – RECORDS OF SUBSURFACE STRUCTURES
- SB 17-007 – MOBILIZATION
- SB 17-008 – QUALIFICATION CARDS
- SB 17-009 – SALVAGEABLE MATERIALS
- SB 17-010 – MILLED ASPHALTIC CONCRETE AGGREGATE
- SB 17-011 – DETECTABLE WARNING UNIT COLOR

- SB 17-012 – TEMPORARY HOUSE CONNECTION MATERIAL

The SB(s) are available online at:
http://www1.nyc.gov/site/ddc/resources/specification-bulletins.page or for pickup between 8:00 AM and 4:00 PM at 30-30 Thomson Avenue, 3rd Floor, Division of Infrastructure, Long Island City, NY 11101. Contacts:

- Mr. Richard Jones, (718) 391-1417
- Mr. Salman Macktoom, (718) 391-2041

(NO FURTHER TEXT THIS PAGE)

SW - PAGES

SEWER AND WATER MAIN REVISIONS TO SPECIFICATIONS

NOTICE

The Standard Sewer And Water Main Specifications of the Department of Environmental Protection (dated July 1, 2014), Sewer Design Standards of the Department of Environmental Protection (dated (September 2007) Revised January 2009), Water Main Standard Drawings of the Department of Environmental Protection (latest revisions), Specifications For Trunk Main Work of the Department of Environmental Protection (dated July 2014) and the Standard Highway Specifications (Volumes I and II) of the Department of Transportation (dated August 1, 2015) of The City of New York, shall be included as part of the contract documents. These said specifications and standard drawings are hereby revised under the following section headings:

A. NOTICE TO BIDDERS
B. REVISIONS TO THE STANDARD SEWER AND WATER MAIN SPECIFICATIONS
C. REVISIONS TO THE SPECIFICATIONS FOR TRUNK MAIN WORK
D. SPECIAL PROVISIONS

(NO TEXT ON THIS PAGE)

A. NOTICE TO BIDDERS

(1) The Contractor is advised that the duration of the contract is 545 days or approximately eighteen (18) months from the date of Order to Commence Work.

(2) The Contractor is advised that this contract may include locations in Queens, Staten Island and Brooklyn – South. At the discretion of the Commissioner via express written consent, locations beyond the limits of Brooklyn North may be included only if contracts, SEQ201BS9, SEQ201BN9, SER201ZA or SEK201BS6, have terminated and only for locations within the respective areas covered by such terminated contract. The cost of the work for these locations shall be deemed included for the prices bid for all contract items.

(3) The Contractor is notified that a Notice To Proceed (NTP) date will be issued for work to commence within twenty-one (21) to thirty (30) days of Contract Registration.

(4) The Contractor shall furnish, install, maintain and subsequently remove temporary Protective Tree Barriers. Protective Tree Barriers shall be Type B, unless otherwise directed by the Engineer, and shall be constructed and installed as shown on the Protective Tree Barrier sketch in Department Of Transportation, Standard Highway Details Of Construction, Drawing No. H-1046A, as directed by the Engineer, and in accordance with Department of Parks and Recreation requirements.

(5) The Contractor is notified that Victaulic Style 77 Coupling is no longer acceptable for use in any steel water main work. All reference to Victaulic Style 77 Coupling within the Standard Sewer And Water Main Specifications of the Department of Environmental Protection (dated July 1, 2014), the Water Main Standard Drawings of the Department of Environmental Protection (latest revisions), the Specifications For Trunk Main Work (dated July 2014), and the contract drawings, shall be replaced with Bolted Split-Sleeve Restrained Coupling.

(6) The Contractor is notified that wherever the Item No. "6.52" and words "flagger", "flagperson" and "flagman" are used in the contract documents and drawings it shall mean the Item No. "6.52 CG" and the words "Crossing Guard", respectively. The Contractor is advised that until the Comptroller of the City of New York sets a prevailing wage rate for crossing guards, there are no prevailing wage rates for crossing guards.

(7) The Contractor is notified that the fuel cost per gallon used in the formula under **Sub-Article 26.2.8** of the Standard Construction Contract for **Extra Work** will be derived from the fuel price index for the United States East Coast published weekly by the United States Energy Information Administration ("USEIA"), and available on its website at http://www.eia.gov/petroleum/gasdiesel/ . The USEIA published cost per gallon for the applicable fuel on the East Coast for the week in which the first day of each calendar quarter during the contract term occurs (i.e., January 1st, April 1st, July 1st and September 1st) will be used in the reimbursement formula for all **Extra Work** invoiced that was performed during that calendar quarter. Should the USEIA stop publishing this fuel price index, the fuel cost per gallon will be determined by reference to a substitute index to be agreed upon by the Contractor and the City.

(8) (A) There is no provision for "ENGINEER'S FIELD OFFICE" in this contract, as per **New York City Department of Transportation (NYCDOT) Standard Highway Specifications Section 6.40 - Engineer's Field Office**.

(B) There is no item for "MOBILIZATION" in this contract. The cost for mobilization shall be deemed included in the prices bid for all contract items of work.

(9) The Project Sign as per **New York City Department of Transportation (NYCDOT) Standard Highway Specifications Subsection 1.06.46 - Project Sign** will not be required on this contract. However, the Contractor shall be required to provide Temporary Notification Signs in accordance with **New York City Department of Transportation (NYCDOT) Standard Highway Specifications Subsection 1.06.46A - Temporary Notification Signs**.

(10)The Contractor is responsible for any damage to the existing street and traffic signal equipment, including underground conduits and the safety of both pedestrian and vehicular traffic for the duration of the contract.

Should any conduits, cables or foundations need repair due to the Contractor's negligent operations during construction, all work shall be performed according to NYCDOT Bureau of Traffic's Standard Drawings and Specifications at the sole expense of the Contractor.

It is the Contractor's responsibility to secure an approved electrical contractor to perform all traffic signal work (if any). For list of approved electrical contractors, contact Mr. Michael R. LeFosse of New York City Department of Transportation at (718) 786-2236.

(11)The Contractor will be required to prepare and submit "**As Built**" sewer record drawings to the Engineer for approval, at the completion of each installation. Drawings submitted at the completion of the entire contract after all installations shall not be accepted. Approved "**As Built**" drawings shall be delivered to the Department of Environmental Protection, Chief of Emergency Construction, 59-17 Junction Boulevard, 6th Floor - High Rise, Corona, New York, 11368, Tel. No. (718) 227-1868. The following guideline is provided for the preparation of "**As Built**" sewer record drawings:

(A) Drawings shall be prepared for each individual unrelated location. The drawings shall be submitted in CADD format on CD's along with a plotted Mylar for each location drawing. The drawings on CD's and the plotted Mylar's shall be legal size (8-1/2" x 14"). The Mylar shall be 3-mil in thickness.

(B) The "**As Built**" drawings shall conform to Department of Environmental Protection (DEP) Emergency Construction Drawings (ECD). A sample copy of the ECD may be obtained at the above office together with DEP guidelines. These DEP guidelines are summarized below:

(1) Drawings shall consist of the same legend and layout of title boxes shown on the sample ECD drawing.
(2) Drawings shall consist of a location plan view on one sheet. The location plan view shall be drawn Not-To-Scale.
(3) Drawings shall contain a note making reference to the datum used. (Datum used shall be that of the Borough where the sewer is located.)
(4) Each plotted Mylar drawing shall contain the signature and stamp of the Contractor's NYS Professional Engineer/Registered Architect.
(5) The location plan view shall include:
    (a) street name and two (2) crossing streets or distance from;
    (b) north arrow;
    (c) property lines and widths;
    (d) curb lines and widths;
    (e) sewers, manholes, catch basins, connections (No horizontal bends allowed on sewer lines);
    (f) sewer sizes, materials (ESVP, RCP, DIP, etc.), and types (New, Existing, Sanitary, Storm, Combined, etc.);
    (g) sewer length (between centerlines of manholes);
    (h) sewer flow direction;
    (i) offsets of sewer lines or extensions from property lines (not curb lines);
    (j) foundations (concrete cradle, stone ballast, piles, etc.);
    (k) manholes types (Precast, Concrete, Brick, A-1, A-2, etc.);
    (l) manhole elevations (both rim and invert);
    (m) manhole stationing along installed sewers;
    (n) catch basins types (Type 1, Type 2, etc.);
    (o) catch basin connections;
    (p) show actual number of manholes and catch basins;

(q) house connection spurs (stations and locations);
(r) address of house connections (new connections and reconnections);
(s) house connection information at curb (station, length, depth and offset from the curb);
(t) details of non-standard structures or appurtenances constructed;
(u) location of all existing and installed offset distances from property lines;
(v) for shotcreted sewers (thickness and reinforcement of shotcreting); and
(w) all appropriate notes.

(6) Examples of notes that can be used are as follows:
(a) Unless otherwise noted, all house connections are 6" ESVP;
(b) Unless otherwise noted, all catch basins are Standard Type 1;
(c) Unless otherwise noted, all new curb connections are at a depth of approximately 8-feet at the curb and are 2-feet inside the curb line;
(d) Unless otherwise noted, all built manholes are brick;
(e) Unless otherwise noted, all catch basin connections are 12" DIP on crushed stone;
(f) unless otherwise noted, all ESVP sewers are installed on 6" concrete cradle;
(g) Pipe lengths are measured from inside face of manhole to inside face of manhole.

(C) The cost of preparing and submitting **"As Built"** approved drawings shall be deemed included in the prices bid for all scheduled bid items in the contract. No separate or additional payment will be made for this work.

(12) At all locations where the Engineer determines that the existing subgrade material has an unsatisfactory soil bearing capacities, the Contractor shall excavate below subgrade to the depth required to remove the unsatisfactory soil (maximum twenty-five (25) foot depth below subgrade), and shall backfilled to subgrade with stone ballast as described in Section 70.71. Payment for this work shall be made under Item No. 73.31AE2 - ADDITIONAL EARTH EXCAVATION INCLUDING TEST PITS (OVER 12' TO 16' DEPTH), Item No. 73.31AE3 - ADDITIONAL EARTH EXCAVATION INCLUDING TEST PITS (OVER 16' TO 20' DEPTH), Item No. 73.31AE4 - ADDITIONAL EARTH EXCAVATION INCLUDING TEST PITS (OVER 20' TO 24' DEPTH), Item No. 73.31AE5 – ADDITIONAL EARTH EXCAVATION INCLUDING TEST PITS (OVER 24' DEPTH); and, Item No. 70.71SB - STONE BALLAST. The cost for any additional sheeting and bracing required for excavating below subgrade shall be deemed included in the price bid for Items No. 73.31AE2 – ADDITIONAL EARTH EXCAVATION INCLUDING TEST PITS (OVER 12' TO 16' DEPTH), Item No. 73.31AE3 - ADDITIONAL EARTH EXCAVATION INCLUDING TEST PITS (OVER 16' TO 20' DEPTH), Item No. 73.31AE4 - ADDITIONAL EARTH EXCAVATION INCLUDING TEST PITS (OVER 20' TO 24' DEPTH), Item No. 73.31AE5 - ADDITIONAL EARTH EXCAVATION INCLUDING TEST PITS (OVER 24' DEPTH)
The Sheeting design shall be submitted to Department of Environmental Protection.

(13) For Specified Length (Spot Repair) Of Existing Catch Basin Connection Reconstruction Work Ordered Performed: The contract prices for Item No. 52.11D12C - 12" DUCTILE IRON PIPE BASIN CONNECTION (FOR CHUTE CONNECTION WORK ONLY), Item No. 52.11V12- 12" EXTRA STRENGTH VIRTIFIED PIPE BASIN CONNECTION, Item No. 52.11V12C – 12" EXTRA STRENGTH VITRIFIED PIPE BASIN CONNECTION (CHUTE CONNECTION WORK ONLY) shall be the unit price bid per linear foot for each size and class of catch basin connection pipe constructed to all specified lengths (spot repair) and shall cover the cost of all labor, materials, equipment, samples, tests and insurance required and necessary to construct the catch basin connections of the sizes and to the lines and grades shown, specified, or ordered, including the earth excavation of all materials of whatever nature encountered (See Section 40.03 - Earth Excavation); concrete cradles; crushed stone bedding and encasements; all sheeting and bracing; pumping; fluming; bridging; breaking down and filling in of abandoned catch basins and catch basin connections together with their foundations, including bulkheading at both ends; cored openings for connections to structures; connections; backfilling; cleaning up; support and maintenance of existing City structures that are encountered during excavation (including fences, copings, vaults, light poles, etc.), all in accordance with the plans, specifications (See Section 52.11) and standards and as directed by the Engineer.

(14) The Contractor shall exercise extreme caution and take all necessary precautions in placing sheeting and excavating to prevent any damage to the existing NYC TRANSIT'S subway structures and its appurtenances during construction work throughout the project area. The Contractor shall take full responsibility to protect the said NYC TRANSIT'S subway structures and its appurtenances and any damage caused by the Contractor's operations shall be made good by the Contractor to the satisfaction of the Engineer at no additional cost to the City.

(15) The Contractor shall submit shop drawings to NYC Transit Authority showing all the details and methods of construction, such as, sheeting and bracing, including the Contractor's procedure and sequence of construction, supporting and/or protection of the existing TA's structures and its appurtenances, with necessary design calculations for approval prior to starting of the construction. The design shall be made by a New York State Licensed Professional Engineer skilled in this type of construction and as further evidenced by the imprint of Professional Engineer's seal and signature on all drawings. The cost of this work shall be deemed included in the price bid for all items of work under this contract.

(16) The contractor is notified that where ever ductile iron pipe is installed within the project scope, especially in soil environments that are considered to be potentially corrosive to ductile iron pipe, that the Engineer may direct the Contractor to test the soil and other conditions that affect the corrosion rate of ductile iron pipe in accordance with "AWWA C105/A21.5, Appendix A" to determine the necessity of polyethylene encasement of pipe. The rate of testing shall not exceed two tests per block. The Engineer reserves the right to witness all sampling and testing of the soil. The cost for testing the soil, including all labor, materials and equipment, shall be included in the prices bid for laying ductile iron pipe and fittings per Section 60.12 of the Standard Sewer and Water Main Specifications.

If the soil is found corrosive for the ductile iron pipe, the Contractor shall encase the new ductile iron pipe and appurtenances in an approved loose 8-mil thick polyethylene sleeve in accordance with item 65.21 PS - "FURNISHING AND PLACING POLYETHYLENE SLEEVE", or as ordered by the Engineer. The payment for all labor, materials and equipment, etc., complete, required for the encasing the ductile iron pipe shall be deemed included in the price bid for the item 65.21 PS - " FURNISHING AND PLACING POLYETHYLENE SLEEVE" and no separate payment shall be made.

(NO FURTHER TEXT ON THIS PAGE)

B. REVISIONS TO THE STANDARD SEWER AND WATER MAIN SPECIFICATIONS

(1) **Refer** to Contract Book, Volume 2 of 3, Standard Construction Contract, **Article 15 - Liquidated Damages:**
Delete this article in its entirety:
Substitute the following new **Article 15**:

ARTICLE 15 - LIQUIDATED DAMAGES

15.1 In the event the Contractor fails to complete the Initial Services, as set forth in **Division VIII, Section DSS-4 - Issuance of Work Orders**, within the Initial Response Time, as set forth in Paragraph 15.2 below, the Contractor shall pay to the City the sum(s) set forth below, for each and every specified period of delay in completing the Initial Services. Due to the difficulty in accurately ascertaining the loss the City will suffer by reason of delay in completion of the Initial Services hereunder, the sum(s) set forth below are hereby fixed and agreed to as the liquidated damages that the City will suffer by reason of such delay, and not as a penalty. Liquidated damages will be assessed on a cumulative basis. This article shall apply to the Contractor if it is defaulted pursuant to Chapter X of this Contract. Neither the failure to assess liquidated damages nor the granting of any time extension shall operate as a waiver or release of any claim the City may have against the Contractor for either actual or liquidated damages.

Delay Beyond Initial Response Time		Amount of Liquidated Damages
(a)	First one (1) hour period after Initial Response Time	$1,000
(b)	First six (6) hour period after the end of the time frame set forth in (a)	$2,000
(c)	Second and all subsequent six (6) hour periods after the end of the time frame set forth in (b)	$3,000

15.2 The Initial Response Time shall mean the period of time within which the Contractor must complete the Initial Services set forth in **Division VIII, Section DSS-4 - Issuance of Work Orders**. The Initial Response Time shall be specified in the Notice provided to the Contractor in accordance with such section. The Initial Response Time shall commence at the time the Notice is transmitted to the Contractor by fax.

15.3 Liquidated damages received hereunder are not intended to be nor shall they be treated as either a partial or full waiver or discharge of the City's right to indemnification, or the Contractor's obligation to indemnify the City, or to any other remedy provided for in this Contract or by Law.

15.4 The Commissioner may deduct and retain out of the monies which may become due hereunder, the amount of any such liquidated damages; and in case the amount which may become due hereunder shall be less than the amount of liquidated damages suffered by the City, the Contractor shall be liable to pay the difference.

(2) **Refer** to **Subsection 10.15 - Notice To Utility Companies, Etc., To Remove Structures Occupying Place Of Sewers, Water Mains Or Appurtenances**, Page I-11:
Add the following to **Subsection 10.15**:

(1) CONSOLIDATED EDISON COMPANY OF NEW YORK (CON EDISON)

There are CON EDISON facilities in the area of construction. The Contractor shall notify CON EDISON at least seventy-two (72) hours prior to the start of construction by contacting Mr. Mike Mobyed at (718) 425-6870.

(2) NATIONAL GRID

There are NATIONAL GRID facilities in the area of construction. The Contractor shall notify NATIONAL GRID at least seventy-two (72) hours prior to the start of construction by contacting Mr. Neville Jacobs Jr. at (718) 963-5612.

(3) VERIZON

There are VERIZON facilities in the area of construction. The Contractor shall notify VERIZON at least seventy-two (72) hours prior to the start of construction by contacting Mr. Aubrey Makhanlall at (718) 977-8165.

(4) TIME WARNER CABLE OF NEW YORK CITY

There are TIME WARNER CABLE facilities in the area of construction. The Contractor shall notify TIME WARNER CABLE at least seventy-two (72) hours prior to the start of construction by contacting Mr. John Piazza at (917) 888-4261.

(2) **Refer** to **Subsection 10.21 - Contractor To Notify City Departments**, Page I-13:
Add the following to **Subsection 10.21**:

(1) N.Y.C. D.E.P., BUREAU OF WATER AND SEWERS OPERATIONS

The Contractor shall notify Mr. Peter Gordon, P.E., Chief, Linear Capital Program Management Division at the Department of Environmental Protection, 59-17 Junction Blvd., 3rd floor low rise, Corona N.Y. 11368, at least thirty (30) days prior to the start of construction.

(2) NEW YORK CITY FIRE DEPARTMENT

The Contractor shall notify the Bureau of Fire Communications at least thirty (30) days prior to the start of construction by contacting Mr. Ed Durkin at (718) 624-4194 or (718) 624-3752.

(3) N.Y.C. DEPARTMENT OF TRANSPORTATION

The Contractor shall notify Mr. Michael Lofesse/ Ghanshyyam Patel Signal/Street Lighting Operations, 34-02 Queens Blvd., Long Island City, N.Y. 11101 at (212)-839-3799 / (212)-839-3359, at least seventy-two (72) hours prior to the start of construction.

(4) N.Y.C. DEPARTMENT OF PARKS AND RECREATION

The Contractor shall notify the Parks Department by the morning of the next business day following the day of notification of the work order at each ordered location by contacting Mr.Jason Conheeney at (718) 965-7740.

(5) N.Y.C. TRANSIT AUTHORITY

(a) The Contractor shall notify Outside Projects at least seven (7) days prior to the start of construction.

The Contractor shall contact:

Mr. Mohamed Adam, P.E.
Project Engineer-Outside Projects
New York City Transit
2 Broadway, 7th Floor
New York, N.Y. 10004
Attention Ms. Alina Avadanei
Telephone No. (646) 252-3641

(b) The Contractor is advised that bus routes as well as bus stops, within the scope of this project may be affected during construction operations. The Contractor shall notify the Transit Authority at least two (2) weeks prior to the start of construction, in order to make the necessary arrangements as required under the NYC TRANSIT GENERAL NOTES included in **Section 10.25, paragraph (A)**, **Section 10.25 paragraph (B)**, and **Section 10.25 paragraph (C)** of this addendum.

Arrangements shall be made through:

Ms. Sarah Wyss
Director Of Short Range, Bus Service Planning (SRB)
New York City Transit
2 Broadway, 17th Floor
New York, N.Y. 10004
Telephone No. (646) 252-5517
sarah.wyss@nyct.com

(d) In addition, the Contractor is advised that construction operations might affect subway lines and stations; and NYCT facilities (i.e. manholes, ducts, etc.). The Contractor shall notify the Transit Authority as required and specified in **Section 10.25 paragraph (A)**, **Section 10.25 paragraph (B)**, and **Section 10.25 paragraph (C)** of this addendum.

(3) **Refer** to **Subsection 10.25 - Contractor To Carry Out Agreement Between City And Railroad Company Or Property Owner(s)**, Page I-14:
Add the following to **Subsection 10.25**:

(A) NYC TRANSIT GENERAL NOTES

(1) The NYC Transit (NYCT) reserves the right to place inspectors, flagmen or other personnel in the subway structures during construction of the project linked by a telephone system, if deemed necessary, to observe the effects of the construction on the transit facilities. It is expected that such personnel will be necessary when the construction comes within twenty-five (25) feet of the subway structure. However, NYCT further reserves the right to place such personnel whenever, in its opinion, the project conditions warrant such placement, regardless of distance. The cost of such personnel, telephone installation and any re-routes, diversions of service, work trains, etc., made necessary by the project, will be paid for directly to the Transit Authority by the City, at no cost to the Contractor.

(2) All rock excavation adjacent to the transit structure is to be channel drilled two (2) feet below subgrade.

(3) If top of rock is found below subway structure, the subway structure must be underpinned in accordance with drawings to be submitted to NYCT for approval.

(4) If rock is soft or seamy, lateral supports must be provided below the subway structure in accordance with drawings to be submitted to NYCT for approval.

(5) Blasting will be permitted only with light charges subject to the approval of NYCT's Engineer and in accordance with the regulations of the Fire Department. The Contractor shall provide a detailed monitoring plan, providing for measurements of both particle velocity and displacements at critical locations of the NYCT structure. The monitoring plan shall include threshold and upset levels of both particle velocity and settlement together with an action plan for their implementation. The Contractor shall secure an approved seismologist to install and operate suitable velocity gauges to continuously monitor particle velocity and an independent licensed surveyor to monitor displacements. The threshold maximum particle velocity above ambient caused by the blasting will be 0.5 inch per second. Values exceeding this level will be reviewed and evaluated by NYCT's Engineer. In no case will particle velocities exceed the upset level of 2.0 inches per second.

(6) Before placing concrete, the subgrade of the foundations in the vicinity of the subway structure is to be inspected and approved by NYCT's Engineer.

(7) If any portion of the subway structure or finish is damaged as a result of the Contractor's operations, it shall be repaired or replaced with the same materials in place, subject to the approval of NYCT's Engineer and at the Contractor's own expense.

(8) Excavation embankments are to be shored and braced. Drawings indicating a suggested method of construction are to be submitted to NYCT for approval in conjunction with the project's contract drawings. In case of excavation undermining the subway structure, underpinning may be required. Drawings for underpinning are to be submitted to NYCT for approval.

(9) Temporary shoring may be placed in direct contact with NYCT structures only if the NYCT structure is shown to be able to support all anticipated loads that can be transferred through the temporary structures without damaging the existing structure. At the completion of the project, these temporary shoring and bracing systems are to be removed or cut-off as approved by NYCT.

(10) When piles are to be driven adjacent to the subway structure, boring data, pile layouts, specifications and installation procedures are to be submitted to NYCT for approval. Velocity meters are to be installed in the subway tunnel at critical locations to monitor induced vibrations. Induced displacements along the tunnel structure and track invert are to be monitored during driving. The threshold maximum particle velocity above ambient caused by the driving will be 0.5 inch per second. Values exceeding this level will be reviewed and evaluated by NYCT's Engineer. In no case will particle velocities exceed the upset level of 2.0 inches per second.

(11) No piles are permitted to be installed by any method within three (3) feet of subway structure measured from the edge of the pile or casing to the wall. Closed-end piles will not be permitted to be driven within ten (10) feet of the subway structure.

(12) All piles are to be placed within a preaugered cased hole to the influence line. The casing shall be cleaned without disturbing the soil outside the casing and the pile placed within the casing for installation. The piles may then be driven beyond the influence line within the casing.

(13) The influence line shall start at the bottom of the subway structure and sidewall and extend at a 1:1 slope. For piles installed within ten (10) feet of the subway structure the casing shall be extended up to the bottom of the subway structure.

(14) At the completion of pile installation, the space between the pile and the casing is to be filled with either clean sand or grout. If the casing is to be removed, the filling must be completed prior to removal of the casing.

(15) All piles are to be driven a minimum of ten (10) feet below the intersection of the pile centerline and the influence line of the subway structure.

(16)The use of "down-the-hole-hammers" for installation of piles through overburden and fill will be permitted only to remove boulders. It will not be permitted as a matter of course to advance the hole. Their use to construct rock sockets will not be allowed within five (5) feet of the NYCT structure.

(17)Vibratory hammers will not be permitted within seventy-five (75) feet of subway structures. Hoerams will not be permitted within twenty-five (25) feet of subway structures.

(18)Dynamic compaction methods using dropped heavy weights cannot be conducted within one thousand (1,000) feet of any NYCT structure unless it is shown that induced settlements and vibrations will not damage these structures. A suitable monitoring plan including settlement and vibration measurements must be approved by NYCT's Engineer for all such operations within these distances.

(19)There shall be no machine excavation within three (3) feet of NYCT structures, power duct lines, or any other facilities until they have been carefully exposed by hand excavation.

(20)All dewatering operations conducted within five hundred (500) feet of the NYCT structure must be performed in accordance with drawings and procedures submitted to NYCT for approval. The distance from the structure to the dewatering operation can be reduced provided that soil conditions at the site indicate that the radius of influence of the dewatering is less than five hundred (500) feet. For dewatering within the radius of influence, the dewatering program must be shown to have negligible influence on settlements of the NYCT structure.

(21)Subway entrances (ventilators, etc.) are to be underpinned or shored and braced if directed by NYCT's Engineer.

(22)NYCT, at its discretion, reserves the right to require the project to close or maintain and protect existing subway entrances, ventilators, etc. adjacent to the project during construction. Such construction may include underpinning, shoring, bracing and erection of suitable barricades and/or canopies and shields. Such protection shall be in accordance with drawings submitted to NYCT for approval.

(23)If shields are to be installed to protect NYCT facilities and/or the public, plans showing the location, type and method of attachment to the transit structure must be submitted to NYCT for approval.

(24)All lumber and plywood used for protection of subway facilities must be fire retardant.

(25)Subway emergency exists must be kept clear at all times.

(26)In excavation over or near the subway roof, special care shall be exercised so that the thin concrete protection of the subway waterproofing is not damaged.

(27)Burning of, welding to or drilling through existing steel structures will not be permitted except as shown on drawings approved by NYCT.

(28)Horizontal and vertical control survey data of the existing NYCT structure is to be taken by a Licensed Land Surveyor to monitor any movements that occur during construction and to show that the induced movements are within allowables provided and approved by NYCT's Engineer. If any movements exceed allowables, remediation as approved by NYCT shall be performed.

(29)Bus routes affected by the project will or may require bus diversions. These arrangements shall be made through:

Ms. Sarah Wyss
Director Of Short Range, Bus Service Planning (SRB)
New York City Transit
2 Broadway, 17th Floor
New York, N.Y. 10004
Telephone No. (646) 252-5517
sarah.wyss@nyct.com

When impacting any bus stop, Special Operations must be notified two (2) weeks in advance.

(30) Duct lines must be maintained and protected during construction. Any interference with duct lines should be reported to NYCT inspector. When a duct line containing cables is to be removed, or when masonry adjacent thereto is to be removed, penetrated, or drilled, the work shall be done with hand labor entirely, using hammer and chisel. Jackhammers, bull points or other power equipment shall not be used.

(31) Where manholes are encountered:

(a) They shall be protected and raised or lowered as required, to match the new street grade.
(b) If manhole covers are raised or lowered, protect cables in manhole by wood sheeting of two (2) inches nominal thickness.
(c) Prior to the start of construction operations affecting manholes and duct lines, seven (7) days notice must be given to Mr. John Malvasio, P.E., Director, Department of Maintenance-Of-Way, at (718) 694-1358.

(32) Construction work done near vent gratings and hatches shall be as follows:

(a) Unless approved by the NYCT's Engineer, all vent gratings and hatches should remain outside the construction site, separated by a construction fence. Protective shields must be provided over vent gratings as required by NYCT's Engineer.
(b) No building material, vehicles or construction equipment is to be stored or run over vent, gratings, hatches or emergency exits.
(c) Details of sidewalk reconstruction around vent gratings, hatches and emergency exists are to be submitted to NYCT for approval.

(33) Tractors, cranes, excavators, etc. used in the vicinity of the elevated structures shall be isolated from the ground. Since the elevated structure is used as a negative return path, with a consequent potential between it and the ground, any contact between the structure and grounded equipment could result in burning of the steel.

(34) Temporary construction sheds, barricades or plywood partitions must be a minimum of five (5) feet from edge of finished platform.

(35) Station Areas or Stairway/Entrance closings: The general requirements for Station Areas or Stairway/Entrance closings are as follows:

(a) Only one (1) stairway at each station will be permitted to be closed at the same time. Approvals for closing any stairway must be obtained from the Division of Station Operations at least three (3) weeks in advance.
(b) Mr. Ashok Patel, Director, Office of Station Programs; Telephone (718) 694-1695 of the Division of Stations must be notified one (1) week prior to the actual closing and reopening of the entrance.
(c) Ample signage must be supplied and posted at least one (1) week in advance, advising the public of the proposed subway stair closing.
(d) The street entrance stairway should not be closed unless manpower and materials are available to commence work on dates permitted.

(e) Once the closing is effected construction signs must be placed at appropriate locations on the barricades at the street and mezzanine levels, stating the Contractor's name, 24-hour emergency telephone number, contract number, the duration of the closing, direction to an alternate entrance/exit, and an apology for the inconvenience to our customers.
(f) Existing station signage must be adjusted to reflect any changes in access/egress.
(g) Barricades are to be painted and kept graffiti free at all times. The Contractor must maintain the barricaded area clean of all debris.
(h) All materials are to be properly stored and secured away from passenger traffic.
(i) The Contractor must remove all waste material and barricades from all station areas when construction is completed.
(j) Inspection of the area under construction by authorized Station Department employees shall not be inhibited.
(k) If street lights on the sidewalks are affected, temporary lights shall be provided.

(36) If new concrete construction is joined to existing concrete, dowels and keyways are to be used in accordance with NYCT Standards.

(37) If the project involves construction or alteration of a subway facility on private property, the property owners will be required to enter into an agreement with NYCT pertaining to all work affecting the transit facilities and clearly defining limits and responsibility for maintenance and liability.

(38) Wherever a new sidewalk is being placed adjacent to NYCT structures the following will be required:

(a) The top of the new sidewalk shall be flush with the subway vent gratings, hatches and emergency exits.
(b) The slope of the new sidewalk shall be such that the drainage be away from these structures.
(c) A one-half (1/2) inch premolded filler shall be installed between the new sidewalk and NYCT structure.
(d) Where sidewalk elevations are being changed details of proposed work around NYCT structures are to be submitted for approval.

(39) Before the start of any work, the Contractor shall make an examination, in the presence of NYCT's Engineer, of the interior and exterior of NYCT subway or other structure adjacent to the proposed work. The person or persons authorized by the Contractor to make these examinations shall be approved by the Engineer. The Contractor shall take all photographs as may be necessary or ordered to indicate the existing condition of NYCT structure. One (1) copy of each photograph, eight (8) inches by ten (10) inches in size, and the negative is to be submitted to Mr. John Malvasio, P.E., Director, Department of Maintenance-Of-Way, 130 Livingston Street, Room 8044D, Brooklyn, New York 11201, Telephone (718) 694-1358 before the start of construction.

(40) All architectural details (token booths, railings, doors, etc.) are to conform to the latest NYCT Standards. These standards are available at NYCT.

(41) Standard NYCT insurance clauses are to be made part of the Project's contract drawings. Proof that the necessary insurance is in effect will be required before work can commence.

(42) At the close of any project involving construction or alterations to transit facilities, one (1) set of vellums or mylars, five (5) sets of 35mm microfilm, and electronic copies complying to microstation.dgn format of "approved as-builts" must be provided to NYCT for its records. For details of specific requirements contact NYCT Outside Projects.

(43) At least seven (7) working days prior to the start of construction operations, notification must be given to Mr. John Malvasio, P.E., Director, Department of Maintenance-Of-Way, at (718) 694-1358. The Contractor shall provide temporary quarters near the job site for NYCT inspectors containing a desk and telephone.

(B) NYC TRANSIT INSURANCE REQUIREMENTS

N.Y.C. TRANSIT INSURANCE: The Contractor (Permittee) shall indemnify and save harmless the City of New York and the New York City Transit (Permittor) in accordance with the following "Insurance Requirements" and proof that the necessary insurance is in effect will be required before work can commence:

NYCT "OUTSIDE CONTRACT" INSURANCE REQUIREMENTS

(1) The Permittee at its sole cost and expense shall carry or cause to carried and shall maintain at all times during the period of performance under this Agreement policies of insurance as herein set forth below:

(A) Workers' Compensation Insurance - (including Employer's Liability Insurance) with limits as specified in Schedule "A", which limit may be met by a combination of primary and excess insurance meeting the statutory limits of New York State. The policy shall be endorsed to include Longshoreman's and Harbor Workers' Compensation Act/Maritime Coverage Endorsement and/or Jones Act Endorsement when applicable.

(B) Commercial General Liability Insurance - (I.S.O. 2001 Form or equivalent) approved by Permittor in the Permittee's name with limits of liability as specified in Schedule "A" for each occurrence on a combined single limit basis for injuries to persons (including death) and damages to property. The limits may be provided in the form of a primary policy or combination of primary and umbrella/excess policy. When the minimum contract amounts can only be met when applying the umbrella/excess policy; the Umbrella/Excess Policy must follow form of the underlying policy and be extended to "drop down" to become primary in the event primary limits are reduced or aggregate limits are exhausted. Such insurance shall be primary and non-contributory to any other valid and collectable insurance and must be exhausted before implicating any Permittor/MTA policy available.

Such policy should be written on an occurrence form; and shall include:

- Contractual coverage for liability assumed by the Permittee under this agreement;
- Personal and Advertising Injury Coverage;
- Products-Completed. Operations;
- Independent Contractors Coverage;
- "XCU" coverage (Explosion, Collapse, and Underground Hazards) where necessary;
- Contractual Liability Exclusion, applicable to construction or demolition operations to be performed within 50-feet of railroad tracks, must be voided, where necessary; and,
- Additional Insured Endorsement (I.S.O. Form CG 20 26 07/04 version or equivalent) approved the Permittor naming:

  New York City Transit Authority (NYCTA), the Manhattan and Bronx Surface Transit Operating Authority (MaBSTOA), the Staten Island Rapid Transit Operating Authority (SIRTOA), MTA Capital Construction Co., the Metropolitan Transportation Authority (MTA) including its subsidiaries and affiliates, and the City of New York (as Owner).

(C) Business Automobile Liability Insurance Policy - (I.S.O. Form CA 00 01 10 01 or equivalent) approved by the Permittor is required if Permittee's vehicle enters Permittor property. The

insurance must be in the name of the Permittee or its contractor entering the Permittor property with limits of liability in the amount specified in Schedule "A" for claims for bodily injuries (including death) to persons and for damage to property arising out of the ownership, maintenance or use of any owned, hired or non-owned motor vehicle.

(D) Railroad Protective Liability Insurance policy shall be required as specified in Schedule "A".

(E) Environmental/Pollution Exposures:

In the event environmental or pollution exposures exist, the Permittee shall require the environmental contractor or sub-contractor to provide the applicable insurance covering such exposure. The limits and type of insurance provided shall be satisfactory to the Permittor and will be confirmed to the parties prior to the start of the work.

(2) General Requirements Applicable To Insurance Policies:

(a) All of the insurance required by this Article shall be with Companies licensed or authorized to do business in the State of New York with an A.M. Best Company rating of not less than A-/VII or better and reasonably approved by the Permittor/MTA and shall deliver evidence of such policies.

(b) Except for Workers Compensation, all references to forms and coverages referred to above shall be the most recent used by the Insurance Services Office, Inc. (ISO") or equivalent forms approved by the Insurance Department of the State of New York, provided, however, that excess coverages may be written on forms reasonably acceptable to Permittor containing provisions other than those contained in ISO forms but otherwise conforming in substance to the requirements of this Article.

(c) The Permittee or its Contractor performing the work shall furnish evidence of all policies before any work is started to the permittor:

For NYCT Contract Inspection
C/O Mr. John Malvasio
Director, MOW Engineering
130 Livingston Street, Room 8044F
Brooklyn, NY 11201
Telephone: (718) 694-1358

These policies must: (i) be written in accordance with the requirements of the paragraphs above, as applicable; (ii) be endorsed in form acceptable to include a provision that the policy will not be canceled, materially changed, or not renewed, unless otherwise indicated herein, at least thirty (30) days prior written notice to the Permittor c/o MTA Risk and Insurance Management (MTA RIM) Department - Standards, Enforcement & Claims Unit, 2 Broadway - 21st floor, New York, NY 10004; and (iii) state or be endorsed to provide that the coverage afforded under the contractor's policies shall apply on a primary and not on an excess or contributing basis with any policies which may be available to the Permittor/MTA, and also that the contractor's policies, primary and excess, must be exhausted before implicating any Permittor/MTA policy available. (iv) In addition, contractor's policies shall state or be endorsed to provide that, if a subcontractor's policy contains any provision that may adversely affect whether contractor's policies are primary and must be exhausted before implicating any Permittor/MTA policy available, contractor's and subcontractor's policies shall nevertheless be primary and must be exhausted before implicating any Permittor/MTA policy available. Except for Professional Liability, policies written on claims made basis are not acceptable. At least two (2) weeks prior to the expiration of the policies, contractor shall endeavor to provide evidence of renewal or replacement policies of insurance, with terms and limits no less favorable than the expiring policies. Except as otherwise indicated in the detailed coverage paragraphs below, self insured retentions and policy deductibles shall not exceed $100,000,

unless such increased deductible or retention is approved by Permittor/MTA. The Permittee shall be responsible for all claim expense and loss payments within the deductible or self-insured retention. The insurance monetary limits required herein may be met through the combined use of the insured's primary and umbrella/excess policies.

(d) Certificates of Insurance may be supplied as evidence of policies of the above policies, except for Policy (D) Railroad Protective Liability Insurance Policy. However, if requested by the Permittor, the Permittee shall deliver to the Authority, within forty-five (45) days of be request, a copy of such policies, certified by the insurance carrier as being true and complete. The Railroad Protective Liability Insurance Policy must be provided in the form of the Original Policy. A detailed Insurance Binder may be provided, ACORD or Manuscript Form, pending issuance of the Original Policy. The Original Policy must be submitted to MTA RIM within thirty (30) days of the Binder Approval.

(e) If a Certificate of Insurance is submitted, it must: (1) be provided on the Permittor Certificate of Insurance Form or MTA Certificate of Insurance Form for Joint Agency Agreements; (2) be signed by an authorized representative of the insurance carrier or producer and notarized; {3) disclose any deductible, self-insured retention, sub-limit, aggregate limit or any exclusions to the policy that materially change the coverage; (4) indicate the Additional Insureds and Named Insureds as required herein, along with a physical copy of the Additional Insured Endorsement (I.S.O. Form CG 20 26 07/04 version or equivalent), as applicable and the endorsement(s) must include policy number(s); (5) reference the Contract by number on the face of the certificate; and (6) expressly reference the inclusion of all required endorsements.

(f) The minimum amounts of insurance required in the detail description of policies (A), (B), (C), and (D) above shall not be construed to limit the extent of the Permittee's liability under this Agreement.

(g) If, at any time during the period of this Agreement, insurance as required is not in effect, or proof thereof is not provided to the Permittor, the Permittor shall have the options to: (i) direct the Permittee to suspend work or operation with no additional cost or extension of time due on account thereof; or (ii) treat such failure as an Event of Default.

(4) **Refer** to **Subsection 10.30 - Contractor To Provide For Traffic**, Page I-15:
Add the following to **Subsection 10.30**:

(1) Traffic Stipulations:

The Contractor shall obtain all permits and traffic requirements from the Office of Construction Mitigation and Coordination (OCMC) within forty-eight (48) hours of beginning work at any ordered location. The Contractors shall contact Mr. Joseph Noto, NYC Department of Transportation, Division of Engineering Control, 55 Water Street, 7th Floor, New York, NY 10041, at (212) 839-9621.

(5) **Refer** to **Section 40.06 - Backfilling**, Page IV-18:
Delete from this section, **Subsection 40.06.2(D) - CLEAN FILL** in its entirety:
Substitute the following new **Subsection 40.06.2(D)**:

(D) CLEAN FILL

(1) Clean fill material for this contract shall be select granular fill ordered in writing by the Engineer where there is a deficiency of acceptable backfill. Select granular fill material shall be required in order to fill voids in the trenches and excavations, (For Sewers Trenches - from a point not less than two (2) feet above the top of sewers to the underside of the pavement as it existed at the start of the work; and, For Water Main Trenches - from a point not less than twelve (12) inches above the top of the barrel of the water main pipe to the underside of the pavement as it existed at

the start of the work), caused by the removal of boulders, unsuitable backfill materials, existing sewers and associated sewer structures, and any other underground facilities or structures, and shall be approved clean earth or sand of low silt and clay content (less than eight (8) percent passing No. 200 sieve), free from bricks, blocks, excavated pavement materials and debris, stumps, roots and other organic matter, as well as ashes, oil and other perishable or foreign matter and shall not contain particles larger than one quarter (1/4) inch in diameter.

(2) This backfill shall be exclusive of the normal backfill required in the trenches and excavations for proposed sewers and associated sewer structures for which payment is included therein. Payment shall be made in accordance with **Subsection 40.06.6**.

(6) **Refer** to **Section 40.06 - Backfilling,** Page IV-18:
Delete from this section, paragraphs (B) and (C) of **Subsection 40.06.6 - Deficiency Of Backfill Material** in their entirety:
Substitute the following new paragraphs:

(B) For providing acceptable select granular fill (whether natural or processed) to satisfy the requirements of **Subsection 40.06.2(D)** to fill voids left by the removal of ledge rock payment shall be made under Item No. 70.61RE - ROCK EXCAVATION. The Contractor's attention is directed to **Section 70.61 - Rock Excavation** of the specifications, and that all references to clean fill therein, shall mean select granular fill.

(C) For providing acceptable select granular fill (whether natural or processed) to satisfy the requirements of **Subsection 40.06.2(D)** payment shall be made under Item No. 73.41AG - ADDITIONAL SELECT GRANULAR BACKFILL. The Contractor's attention is directed to **Section 73.41 - Additional Select Granular Backfill** of the specifications, with the addition that the conditions for use as specified in **Subsection 73.41.1** shall be expanded to include those specified in **Subsection 40.06.2(D)** as amended hereinbefore.

(7) **Refer** to **Section 70.51 - Excavation Of Boulders In Open Cut**, Page VII-37:
Add the following new **Subsection 70.51.6**:

70.51.6 EXISTING SEWER ENCASED IN CONCRETE

The Contractor is advised that at certain locations, the existing sewer to be removed may be encased in concrete. Where this condition is encountered, the Contractor shall remove the concrete encasement from the site. The quantity, in cubic yards, to be measured for payment shall be determined by taking the total volume of the encased sewer including the cradle portion less the volume of the sewer pipe. Payment shall be made at the unit price bid for Item No. 70.51EO - EXCAVATION OF BOULDERS IN OPEN CUT and shall cover the cost of all labor, materials, plant, equipment and insurance necessary to remove the concrete encasement, together with all work incidental thereto, as directed by the Engineer. The cost of any additional backfilling required to be done in connection with this work shall be deemed included in the unit price bid for Item No. 70.51EO - EXCAVATION OF BOULDERS IN OPEN CUT.

(8) **Refer** to **Subsection 71.41.4 - Specific Pavement Restoration Provisions**, Page VII-67:
Add the following to **Subsection 71.41.4**:

(E) Specific Pavement Restoration Provisions:

Upon completion, at each and every ordered location, of the reconstructed collapsed or otherwise defective storm, sanitary or combined vitrified clay pipe sewers and the backfill and compaction of all

sewer and water main trenches, the Contractor shall permanently restore all roadways, sidewalks and curbs within the ordered limits of the trench width and cutbacks as follows:

(1) Roadway Restoration:

(a) The permanent roadway restoration over the **trench widths and cutbacks only** shall consist of a top course of one and one-half (1-1/2) inches of asphaltic concrete wearing course on a base course of a minimum of four and one-half (4-1/2) inches of binder mixture, or a top course of one and one-half (1-1/2) inches of asphaltic concrete wearing course on a minimum of one and one-half (1-1/2) inches of binder mixture on a base course of a minimum of six (6) inches of high-early strength concrete, to match the existing pavement as directed by the Engineer.

(b) Before the top course is installed, an additional width of asphalt beyond the edge of new base course shall be saw-cut and removed from all edges of trenches to a depth to accommodate the specified top course and the entire area restored. This additional removal shall be in accordance with paragraph (c).

(c) Pavement excavation along with saw cutting of pavements for sewer and water main trenches shall be in accordance with **Section 71.21 - Pavement Excavation** of the Standard Sewer And Water Main Specifications.

(d) At locations requiring the installation of a high-early strength concrete base course, a reflective cracking membrane shall be installed over joints prior to restoration. Additionally, appropriate pavement keys as described below shall be used as required by the Engineer.

(e) Pavement keys **Type B-1** shall be used to insure a desired four (4) inch curb reveal (two and one-half (2-1/2) inch absolute minimum). Pavement key **Type A** shall be used in all intersections. Both keys are to be per Bureau of Highways Operations Specifications and Standard Details of Construction.

(f) The cost of all labor, materials, equipment, samples and tests required and necessary to permanently restore the roadway over the trench width and cutbacks only shall be deemed included in the prices bid for Item No. 1.A08 - 8" E.S.V.P. SEWER, ON CONCRETE CRADLE (MINIMUM 15 FEET LENGTHS), Item No. 1.B08 - 8" E.S.V.P. SEWER, ON CONCRETE CRADLE (ADDITIONAL LENGTH BEYOND THE MINIMUM 15 FEET) (FIXED UNIT PRICE TO BE 70% OF UNIT PRICE BID FOR ITEM NO. 1.A08), Item No. 1.C10 - 10" E.S.V.P. SEWER, ON CONCRETE CRADLE (MINIMUM 15 FEET LENGTHS), Item No. 1.D10 - 10" E.S.V.P. SEWER, ON CONCRETE CRADLE (ADDITIONAL LENGTH BEYOND THE MINIMUM 15 FEET TO A MAXIMUM OF 100 FEET) (FIXED UNIT PRICE TO BE 70% OF UNIT PRICE BID FOR ITEM NO. 1.C10), Item No. 1.E10 - 10" E.S.V.P. SEWER, ON CONCRETE CRADLE (ADDITIONAL LENGTH BEYOND 100 FEET) (FIXED UNIT PRICE TO BE 63% OF UNIT PRICE BID FOR ITEM NO. 1.C10), Item No. 1.F12 - 12" E.S.V.P. SEWER, ON CONCRETE CRADLE (MINIMUM 15 FEET LENGTHS), Item No. 1.G12 - 12" E.S.V.P. SEWER, ON CONCRETE CRADLE (ADDITIONAL LENGTH BEYOND THE MINIMUM 15 FEET TO A MAXIMUM OF 100 FEET) (FIXED UNIT PRICE TO BE 70% OF UNIT PRICE BID FOR ITEM NO. 1.F12), Item No. 1.H512 - 12" E.S.V.P. SEWER, ON CONCRETE CRADLE (ADDITIONAL LENGTH BEYOND 100 FEET) (FIXED UNIT PRICE TO BE 63 % OF UNIT PRICE BID FOR ITEM NO. 1.F12), Item No. 1.I15 - 15" E.S.V.P. SEWER, ON CONCRETE CRADLE (MINIMUM 15 FEET LENGTHS), Item No. 1.J15 - 15" E.S.V.P. SEWER, ON CONCRETE CRADLE (ADDITIONAL LENGTH BEYOND THE MINIMUM 15 FEET TO A MAXIMUM OF 100 FEET) (FIXED UNIT PRICE TO BE 70% OF UNIT PRICE BID FOR ITEM NO. 1.I15), Item No. 1.K15 - 15" E.S.V.P. SEWER, ON CONCRETE CRADLE (ADDITIONAL LENGTH BEYOND 100 FEET) (FIXED UNIT PRICE TO BE 63% OF UNIT PRICE BID FOR ITEM NO. 1.I15), Item No. 1.L18 - 18" E.S.V.P. SEWER, ON CONCRETE CRADLE (MINIMUM 15 FEET LENGTHS), Item No. 1.M18 - 18" E.S.V.P. SEWER, ON CONCRETE CRADLE (ADDITIONAL LENGTH BEYOND THE MINIMUM 15 FEET TO A MAXIMUM OF 100 FEET) (FIXED UNIT PRICE TO BE 70% OF UNIT PRICE BID FOR ITEM NO. 1.L18), Item No. 1.N18 - 18" E.S.V.P. SEWER, ON CONCRETE CRADLE (ADDITIONAL

LENGTH BEYOND 100 FEET) (FIXED UNIT PRICE TO BE 63% OF UNIT PRICE BID FOR ITEM NO. 1.L18), Item No. 1.O24 - 24" R.C.P. CLASS III SEWER, ON CONCRETE CRADLE (MINIMUM 15 FEET LENGTHS, Item No. 1.P24 - 24" R.C.P. CLASS III SEWER, ON CONCRETE CRADLE (ADDITIONAL LENGTH BEYOND THE MINIMUM 15 FEET TO A MAXIMUM OF 100 FEET) (FIXED UNIT PRICE TO BE 72% OF UNIT PRICE BID FOR ITEM NO. 1.O24), Item No. 1.Q24 - 24" R.C.P. CLASS III SEWER, ON CONCRETE CRADLE (ADDITIONAL LENGTH BEYOND 100 FEET) (FIXED UNIT PRICE TO BE 65% OF UNIT PRICE BID FOR ITEM NO. 1.O24), Item No. 1.R30 - 30" R.C.P. CLASS III SEWER, ON CONCRETE CRADLE (MINIMUM 15 FEET LENGTHS), Item No. 1.S30 - 30" R.C.P. CLASS III SEWER, ON CONCRETE CRADLE (ADDITIONAL LENGTH BEYOND THE MINIMUM 15 FEET TO A MAXIMUM OF 100 FEET) (FIXED UNIT PRICE TO BE 72% OF UNIT PRICE BID FOR ITEM NO. 1.R30), Item No. 1.T30 - 30" R.C.P. CLASS III SEWER, ON CONCRETE CRADLE (ADDITIONAL LENGTH BEYOND 100 FEET) (FIXED UNIT PRICE TO BE 65% OF UNIT PRICE BID FOR ITEM NO. 1.R30), Item No. 1.U36 - 36" R.C.P. CLASS III SEWER, ON CONCRETE CRADLE (MINIMUM 15 FEET LENGTHS), Item No. 1.V36 - 36" R.C.P. CLASS III SEWER, ON CONCRETE CRADLE (ADDITIONAL LENGTH BEYOND THE MINIMUM 15 FEET TO A MAXIMUM OF 100 FEET) (FIXED UNIT PRICE TO BE 72% OF UNIT PRICE BID FOR ITEM NO. 1.U36), Item No. 1.W36 - 36" R.C.P. CLASS III SEWER, ON CONCRETE CRADLE (ADDITIONAL LENGTH BEYOND 100 FEET) (FIXED UNIT PRICE TO BE 65% OF UNIT PRICE BID FOR ITEM NO. 1.U36), Item No. 1.X42 - 42" R.C.P. CLASS III SEWER, ON CONCRETE CRADLE (MINIMUM 15 FEET LENGTHS), Item No. 1.Y42 - 42" R.C.P. CLASS III SEWER, ON CONCRETE CRADLE (ADDITIONAL LENGTH BEYOND THE MINIMUM 15 FEET TO A MAXIMUM OF 100 FEET) (FIXED UNIT PRICE TO BE 72% OF UNIT PRICE BID FOR ITEM NO. 1.X42), Item No. 1.Z42 - 42" R.C.P. CLASS III SEWER, ON CONCRETE CRADLE (ADDITIONAL LENGTH BEYOND 100 FEET) (FIXED UNIT PRICE TO BE 65% OF UNIT PRICE BID FOR ITEM NO. 1.X42), Item No. 1.A48 - 48" R.C.P. CLASS III SEWER, ON CONCRETE CRADLE (MINIMUM 15 FEET LENGTHS), Item No. 1.B48 - 48" R.C.P. CLASS III SEWER, ON CONCRETE CRADLE (ADDITIONAL LENGTH BEYOND THE MINIMUM 15 FEET TO A MAXIMUM OF 100 FEET) (FIXED UNIT PRICE TO BE 72% OF UNIT PRICE BID FOR ITEM NO. 1.A48), Item No. 1.C48 - 48" R.C.P. CLASS III SEWER, ON CONCRETE CRADLE (ADDITIONAL LENGTH BEYOND 100 FEET) (FIXED UNIT PRICE TO BE 65% OF UNIT PRICE BID FOR ITEM NO. 1.A48), Item No. 60.12D20 - LAYING 20-INCH DUCTILE IRON PIPE AND FITTINGS, Item No. 60.12D12 - LAYING 12-INCH DUCTILE IRON PIPE AND FITTINGS, Item No. 60.12D08 - LAYING 8-INCH DUCTILE IRON PIPE AND FITTINGS, and Item No. 60.12D06 - LAYING 6-INCH DUCTILE IRON PIPE AND FITTINGS. No separate or additional payment will be made for any one and one-half (1-1/2) inches of asphaltic concrete wearing course, binder mixture, high-early strength concrete, reflective cracking member, tack coating, full and partial depth saw cutting, excavation of pavements, stripping or milling of existing pavements, etc. required to permanently restore the roadway over the trench width and cutbacks, cost shall be deemed included in the prices bid for the items specified herein paragraph (f).

(2) Sidewalk And Curb Restoration:

(a) The permanent sidewalk restoration over the **trench width and cutbacks only** shall consist of 4" concrete sidewalk (unpigmented) outside driveway and 7" concrete sidewalk (unpigmented) inside driveway and pedestrian ramps, as directed by the Engineer. All sidewalks shall be restored in full flag units.

(b) Since all sidewalks shall be restored in full flag units, the cutbacks for sidewalk restoration shall be defined as the distances beyond the edges of the trenches that require removal in order to get to an adjacent undisturbed full flag unit. For the purpose of this contract sidewalk shall be saw-cut, removed and restored in full flag units up to a maximum overall width of ten (10) feet (two (2) full flag units).

(c) The permanent restoration of curbs over the **trench width only** shall consist of concrete curb, straight steel faced concrete curb, depressed steel faced concrete curb and corner steel faced concrete curb, as directed by the Engineer.

(d) The cost of all labor, materials, equipment, samples and tests required and necessary to permanently restore the sidewalk and curb over the trench width and cutbacks only shall be deemed included in the prices bid for Item No. 1.A08 - 8" E.S.V.P. SEWER, ON CONCRETE CRADLE (MINIMUM 15 FEET LENGTHS), Item No. 1.B08 - 8" E.S.V.P. SEWER, ON CONCRETE CRADLE (ADDITIONAL LENGTH BEYOND THE MINIMUM 15 FEET) (FIXED UNIT PRICE TO BE 70% OF UNIT PRICE BID FOR ITEM NO. 1.A08), Item No. 1.C10 - 10" E.S.V.P. SEWER, ON CONCRETE CRADLE (MINIMUM 15 FEET LENGTHS), Item No. 1.D10 - 10" E.S.V.P. SEWER, ON CONCRETE CRADLE (ADDITIONAL LENGTH BEYOND THE MINIMUM 15 FEET TO A MAXIMUM OF 100 FEET) (FIXED UNIT PRICE TO BE 70% OF UNIT PRICE BID FOR ITEM NO. 1.C10), Item No. 1.E10 - 10" E.S.V.P. SEWER, ON CONCRETE CRADLE (ADDITIONAL LENGTH BEYOND 100 FEET) (FIXED UNIT PRICE TO BE 63% OF UNIT PRICE BID FOR ITEM NO. 1.C10), Item No. 1.F12 - 12" E.S.V.P. SEWER, ON CONCRETE CRADLE (MINIMUM 15 FEET LENGTHS), Item No. 1.G12 - 12" E.S.V.P. SEWER, ON CONCRETE CRADLE (ADDITIONAL LENGTH BEYOND THE MINIMUM 15 FEET TO A MAXIMUM OF 100 FEET) (FIXED UNIT PRICE TO BE 70% OF UNIT PRICE BID FOR ITEM NO. 1.F12), Item No. 1.H512 - 12" E.S.V.P. SEWER, ON CONCRETE CRADLE (ADDITIONAL LENGTH BEYOND 100 FEET) (FIXED UNIT PRICE TO BE 63 % OF UNIT PRICE BID FOR ITEM NO. 1.F12), Item No. 1.I15 - 15" E.S.V.P. SEWER, ON CONCRETE CRADLE (MINIMUM 15 FEET LENGTHS), Item No. 1.J15 - 15" E.S.V.P. SEWER, ON CONCRETE CRADLE (ADDITIONAL LENGTH BEYOND THE MINIMUM 15 FEET TO A MAXIMUM OF 100 FEET) (FIXED UNIT PRICE TO BE 70% OF UNIT PRICE BID FOR ITEM NO. 1.I15), Item No. 1.K15 - 15" E.S.V.P. SEWER, ON CONCRETE CRADLE (ADDITIONAL LENGTH BEYOND 100 FEET) (FIXED UNIT PRICE TO BE 63% OF UNIT PRICE BID FOR ITEM NO. 1.I15), Item No. 1.L18 - 18" E.S.V.P. SEWER, ON CONCRETE CRADLE (MINIMUM 15 FEET LENGTHS), Item No. 1.M18 - 18" E.S.V.P. SEWER, ON CONCRETE CRADLE (ADDITIONAL LENGTH BEYOND THE MINIMUM 15 FEET TO A MAXIMUM OF 100 FEET) (FIXED UNIT PRICE TO BE 70% OF UNIT PRICE BID FOR ITEM NO. 1.L18), Item No. 1.N18 - 18" E.S.V.P. SEWER, ON CONCRETE CRADLE (ADDITIONAL LENGTH BEYOND 100 FEET) (FIXED UNIT PRICE TO BE 63% OF UNIT PRICE BID FOR ITEM NO. 1.L18), Item No. 1.O24 - 24" R.C.P. CLASS III SEWER, ON CONCRETE CRADLE (MINIMUM 15 FEET LENGTHS, Item No. 1.P24 - 24" R.C.P. CLASS III SEWER, ON CONCRETE CRADLE (ADDITIONAL LENGTH BEYOND THE MINIMUM 15 FEET TO A MAXIMUM OF 100 FEET) (FIXED UNIT PRICE TO BE 72% OF UNIT PRICE BID FOR ITEM NO. 1.O24), Item No. 1.Q24 - 24" R.C.P. CLASS III SEWER, ON CONCRETE CRADLE (ADDITIONAL LENGTH BEYOND 100 FEET) (FIXED UNIT PRICE TO BE 65% OF UNIT PRICE BID FOR ITEM NO. 1.O24), Item No. 1.R30 - 30" R.C.P. CLASS III SEWER, ON CONCRETE CRADLE (MINIMUM 15 FEET LENGTHS), Item No. 1.S30 - 30" R.C.P. CLASS III SEWER, ON CONCRETE CRADLE (ADDITIONAL LENGTH BEYOND THE MINIMUM 15 FEET TO A MAXIMUM OF 100 FEET) (FIXED UNIT PRICE TO BE 72% OF UNIT PRICE BID FOR ITEM NO. 1.R30), Item No. 1.T30 - 30" R.C.P. CLASS III SEWER, ON CONCRETE CRADLE (ADDITIONAL LENGTH BEYOND 100 FEET) (FIXED UNIT PRICE TO BE 65% OF UNIT PRICE BID FOR ITEM NO. 1.R30), Item No. 1.U36 - 36" R.C.P. CLASS III SEWER, ON CONCRETE CRADLE (MINIMUM 15 FEET LENGTHS), Item No. 1.V36 - 36" R.C.P. CLASS III SEWER, ON CONCRETE CRADLE (ADDITIONAL LENGTH BEYOND THE MINIMUM 15 FEET TO A MAXIMUM OF 100 FEET) (FIXED UNIT PRICE TO BE 72% OF UNIT PRICE BID FOR ITEM NO. 1.U36), Item No. 1.W36 - 36" R.C.P. CLASS III SEWER, ON CONCRETE CRADLE (ADDITIONAL LENGTH BEYOND 100 FEET) (FIXED UNIT PRICE TO BE 65% OF UNIT PRICE BID FOR ITEM NO. 1.U36), Item No. 1.X42 - 42" R.C.P. CLASS III SEWER, ON CONCRETE CRADLE (MINIMUM 15 FEET LENGTHS), Item No. 1.Y42 - 42" R.C.P. CLASS III SEWER, ON CONCRETE CRADLE (ADDITIONAL LENGTH BEYOND THE MINIMUM 15 FEET TO A MAXIMUM OF 100 FEET) (FIXED UNIT PRICE TO BE 72% OF UNIT PRICE BID FOR ITEM NO. 1.X42), Item No. 1.Z42 - 42" R.C.P. CLASS III SEWER, ON CONCRETE CRADLE (ADDITIONAL LENGTH BEYOND 100 FEET) (FIXED UNIT PRICE TO BE 65% OF UNIT PRICE BID FOR ITEM NO. 1.X42), Item No. 1.A48 - 48" R.C.P. CLASS III SEWER, ON CONCRETE CRADLE (MINIMUM 15 FEET LENGTHS), Item No. 1.B48 - 48" R.C.P. CLASS III SEWER, ON CONCRETE CRADLE (ADDITIONAL LENGTH BEYOND THE MINIMUM 15 FEET TO A MAXIMUM OF 100 FEET) (FIXED UNIT PRICE TO BE 72% OF UNIT PRICE BID FOR ITEM

NO. 1.A48), Item No. 1.C48 - 48" R.C.P. CLASS III SEWER, ON CONCRETE CRADLE (ADDITIONAL LENGTH BEYOND 100 FEET) (FIXED UNIT PRICE TO BE 65% OF UNIT PRICE BID FOR ITEM NO. 1.A48), Item No. 60.12D20 - LAYING 20-INCH DUCTILE IRON PIPE AND FITTINGS, Item No. 60.12D12 - LAYING 12-INCH DUCTILE IRON PIPE AND FITTINGS, Item No. 60.12D08 - LAYING 8-INCH DUCTILE IRON PIPE AND FITTINGS, and Item No. 60.12D06 - LAYING 6-INCH DUCTILE IRON PIPE AND FITTINGS. No separate or additional payment will be made for any concrete sidewalk including 6" foundation material, straight and depressed concrete and steel faced concrete curb, corner steel faced concrete curb, full and partial depth saw cutting, excavation of sidewalks and curbs, etc. required to permanently restore the sidewalk and curb over the trench width and cutbacks, cost shall be deemed included in the prices bid for the items specified herein paragraph (d).

(3) The cost for all saw cutting of sewer and water trenches and cutbacks, excavation of pavements within limits of sewer and water trenches and cutbacks, tack coating, removal of pavement markings and replacement with thermoplastic reflectorized pavement markings (crosswalks and lane dividers), placement and eradication of temporary roadway markings, stripping or milling of pavement keys and adjustment of city owned castings shall be deemed included in the prices bid for the items specified in paragraph (1)(f) above and paragraph (2)(d) above of this section. No separate or additional payment will be made for this work.

(4) All Sidewalks; Driveways; Curbs; Corner Curbs; Pedestrian Ramps; and Roadway base courses, top courses and wearing courses shall be installed in conformance with the latest Department of Transportation Specifications and Standard Details, except as amended herein.

(5) The Contractor shall exercise caution during the construction operation, so as to prevent damage and/or disturbance to sidewalks, curbs and roadways outside the ordered reconstruction limits of trench width and cutbacks.

(6) All disturbed grass sidewalk areas over the trench width and cutbacks only shall be restored in conformance with the **New York City Department of Transportation (NYCDOT) Standard Highway Specifications Section 4.19 - Sodding**. The cost of all labor, materials, equipment, samples and tests required and necessary to install sod in grass sidewalk areas over the trench width and cutbacks shall be deemed included in the prices bid for the items specified in paragraph (1)(f) above and paragraph (2)(d) above of this section. No separate or additional payment will be made for this work.

(7) Should granite block, asphalt block or brick pavement be encountered over the trench width and cutbacks only, five (5) inches of binder mixture shall be substituted for the blocks and bricks removed. The binder mixture shall be installed on a base course of a minimum of six (6) inch of high-early strength concrete and topped with a top course of one and one-half (1-1/2) inches of asphaltic concrete wearing course on a minimum of one and one-half (1-1/2) inches of binder mixture to match the existing pavement as directed by the Engineer. All granite or brick removed shall be delivered to the designated City Yard. The cost of all labor, materials, equipment, samples and tests required and necessary to install new pavement as described herein to replace granite block, asphalt block or brick pavement over the trench width and cutbacks shall be deemed included in the prices bid for the items specified in paragraph (1)(f) above and paragraph (2)(d) above of this section. No separate or additional payment will be made for this work.

(8) If additional roadway restoration is required and ordered in writing by the Engineer outside the ordered limits of trench widths and cutbacks the cost of all labor, materials, equipment, samples and tests required and necessary to perform this additional roadway restoration work shall be deemed included in the prices bid for Item No. 4.02 CA - BINDER MIXTURE, Item No. 4.02 CB - ASPHALTIC CONCRETE MIXTURE, and Item No. 4.04 H - CONCRETE BASE FOR PAVEMENT, VARIABLE THICKNESS FOR TRENCH RESTORATION, (HIGH-EARLY STRENGTH). Included in the prices bid for these items shall be the cost for all saw cutting, excavation of pavements, tack coating, removal of pavement markings and replacement with thermoplastic reflectorized pavement markings (crosswalks and lane dividers), placement and eradication of temporary roadway markings, stripping or milling of

pavement keys and adjustment of city owned castings. No separate or additional payment will be made for this work.

(9) If additional sidewalk restoration is required and ordered in writing by the Engineer outside the ordered limits of trench widths and cutbacks the cost of all labor, materials, equipment, samples and tests required and necessary to perform this additional sidewalk restoration shall be deemed included in the prices bid for Item No. 4.13 AAS - 4" CONCRETE SIDEWALK (UNPIGMENTED), and Item No. 4.13 BAS - 7" CONCRETE SIDEWALK (UNPIGMENTED). Included in the prices bid for these items shall be the cost for all saw cutting, excavation of sidewalks, 6" foundation material, etc. No separate or additional payment will be made for this work.

(9) **Refer** to Page VII-104:
Add the following new **DIVISION VIII**:

DIVISION VIII
DETAILED SPECIFICATION FOR RECONSTRUCTION OF COLLAPSED OR OTHERWISE DEFECTIVE STORM, SANITARY OR COMBINED VITRIFIED CLAY PIPE SEWERS

DSS-1 INTENT

It is intent of this emergency repairs contract, at all locations and areas ordered under this contract as determined by the New York City Department of Environmental Protection and as directed by the Engineer to reconstruct sections of existing collapsed or otherwise defective Storm, Sanitary or Combined Sewers in roadways, sidewalks, malls, medians, pedestrianways, easements or other non-roadway areas including the reconnection of all existing house sewers, basin connections, and the construction of new manholes as required.

The sections of existing collapsed or otherwise defective Storm, Sanitary or Combined Sewers shall be removed and reconstructed with Extra Strength Vitrified Clay Pipe on Concrete Cradle and/or Precast Reinforced Concrete Pipe on Concrete Cradle, complete, as shown, specified or required.

The Contractor, when so ordered by the Engineer, will be required to substitute the use of Ductile Iron Pipe on Stone Bedding in lieu of Extra-Strength Vitrified Clay Pipe on Concrete Cradle for the various sized pipes indicated in the Bid Schedule. The Ductile Iron Pipe shall meet all of the requirements, standards and specifications of the Department of Environmental Protection. The payment for Ductile Iron Pipe on Stone Bedding will be made under the applicable unit prices bid for the various sizes of Extra-Strength Vitrified Clay Pipe on Concrete Cradle. The substitution of 15-inch Extra-Strength Vitrified Clay Pipe will be made with 16-inch Ductile Iron Pipe.

At each ordered location the length of existing collapsed or otherwise defective Storm, Sanitary or Combined Pipe Sewer to be reconstructed will vary; however, the length will generally not be less than fifteen (15) feet per trench opening. The actual length at each ordered location and the area of reconstruction will be determined by the New York City Department of Environmental Protection and as directed by the Engineer. For each reconstruction less than a manhole length, the trench opening shall be at least one and one-half (1-1/2) feet longer at the ends of the reconstruction to permit proper jointing.

DSS-2 STANDARD SEWER AND WATER MAIN SPECIFICATION

Unless otherwise specified, all work and materials shall conform to the applicable sections of the Standard Sewer And Water Main Specifications of the Department of Environmental Protection (dated July 1, 2014), Sewer Design Standards of the Department of Environmental Protection (dated (September 2007) Revised January 2009), Water Main Standard Drawings of the Department of Environmental Protection (latest revisions), and the Standard Highway Specifications (Volumes I and II) of the Department of Transportation (dated November 1, 2010) of The City of New York.

DSS-3 DEFINITIONS

Whenever the following pronoun appears in this contract, the meaning and intent shall be interpreted as follows unless a different meaning is clear from the context: "Engineer" shall mean the Director, Bureau of Water and Sewer Operations, Department of Environmental Protection, or a designated representative to act as such in relation to this contract.

DSS-4 ISSUANCE OF WORK ORDERS

(A) General: The Contractor shall, for the duration of this contract, provide services as directed by the Engineer for the reconstruction of existing sewers or portions thereof, in accordance with the terms and conditions set forth herein. The services to be provided by the Contractor shall include both Initial Services and Reconstruction Services, as described below.

(B) Transmission of Notices and Work Orders:

(1) The Engineer shall advise the Contractor of the need for services hereunder through Notices, as set forth in **Paragraph (C)** below, and Work Orders, as set forth in **Paragraph (D)** below. The Engineer shall send Notices and Work Orders to the Contractor by e-mail, fax, or by telephone promptly confirmed by e-mail and/or fax.

(2) The Contractor shall, for the duration of this contract, provide and maintain at its place of business a dedicated telephone line, a dedicated e-mail address and a dedicated fax line for the receipt of Notices and Work Orders hereunder. The e-mail and fax machine shall be in operation twenty-four (24) hours per day, seven (7) days per week, for the duration of this contract. The Contractor shall not be entitled to any compensation for the provision of such equipment. All expenses for the required telephone, e-mail and fax lines shall be deemed included in the Contractor's overhead.

(C) Initial Services to be Provided by Contractor:

(1) Notice: When the need for services arises, the Engineer shall issue a Notice to the Contractor. The Notice shall specify the following: (a) the location where the Contractor must provide Initial Services, and (b) the Initial Response Time.

(2) Initial Services: The Contractors shall complete the Initial Services set forth below within the Initial Response Time specified by the Engineer in the Notice.

(a) Make the area safe for residents in the area of the ordered work and for pedestrian and vehicular traffic. Such work shall include, but not be limited to, the placement of adequate lighted barricades, plates, signs, as well as any other work required by the Engineer in order to make the area safe.
(b) As directed by the Engineer the Contractor shall:
(i) Commence excavation, and/or
(ii) Provide and operate such pumping equipment to maintain sewage flow

(3) Initial Response Time: Initial Response Time shall mean the period of time within which the Contractor must complete the Initial Services, set forth in **Paragraph (2)** above. The Initial Response Time shall be specified in the Notice set forth in **Paragraph (1)** above. The Initial Response Time shall commence at the time the Notice is transmitted to the Contractor by fax or Email. The Contractor is advised that the Initial Response Time shall be determined by the Department of Environmental Protection, in its sole discretion and in accordance with the degree of emergency presented. The Contractor is advised that the Initial Response Time will

range from a minimum of within six (6) hours of notification to a maximum of within twenty-four (24) hours of notification.

(D) Work Order: When the need for services arises, the Engineer shall issue a Work Order to the Contractor. The Work Order shall specify the items set forth below:

(1) Description and Location of the Project
(2) Length of Reconstruction Work
(3) Reconstruction Services to be performed
(4) Reconstruction Time - Time for commencement and completion of work

(E) Reconstruction Services: The Engineer shall specify the services necessary and required for reconstruction. The Contractor shall perform such reconstruction services within the reconstruction time, as set forth below.

(F) Reconstruction Time: The Reconstruction Time shall mean the period of time within which the Contractor must complete the required Reconstruction Services. The Reconstruction Time shall be specified in the Work Order. The Contractor is advised that the Reconstruction Time shall be determined by the Department of Environmental Protection, in its sole discretion and in accordance with the degree of emergency presented. The Contractor is advised that the Reconstruction Time will range from a minimum of twelve (12) hours to a maximum of forty-eight (48) hours.

Time is of the essence as the public health and safety are involved. Accordingly, the Contractor shall perform the work at each and every ordered location promptly and diligently, using such means and methods of construction as will assure its expeditious and satisfactory completion without delay.

(G) Personnel: The Contractor shall provide adequate personnel and equipment at each ordered location. Prior to the start of work the Engineer shall approve such personnel and equipment. The Engineer reserves the right to determine the personnel and equipment required to adequately and properly carry out the intent of this contract and to order personnel and equipment in excess of that normally required for the work to be done, off the job site. No payment will be made for such excess personnel and equipment. The Contractor must be prepared to provide adequate personnel and equipment to perform the services specified in **Paragraphs (C) and (E)** above at up to six (6) concurrent reconstruction sites continuously and uninterrupted to completion.

(H) No Right To Refuse: The Contractor shall have no right to reject or decline to perform any Work Order issued under this contract. However, if the Contractor is unable to begin the work of reconstruction for any reason, the Contractor shall so notify the Engineer by telephone as soon as possible, such notifications to be followed by an explanation in writing as to the reasons why the Contractor is unable to begin the required work.

(I) Supplementary Work Orders: The Contractor shall perform only the work specifically ordered by the Engineer in the written Work Order. The Department of Environmental Protection reserves the right to order additional work through Supplementary Work Orders issued by the Engineer, as the work on the original Work Order progresses.

DSS-5 WORK INCLUDED

The Contractor shall at each and every ordered location, furnish all labor, equipment, materials and supervision, and shall perform all the work called for within each item ordered including any incidental work required for a complete and satisfactory job.

All labor, equipment and materials necessary for the proper execution and completion of each item of work called for are to be furnished and delivered by and at the cost and expense of the Contractor, and the work executed and completed in every detail whether specifically mentioned or not.

The Contractor must be prepared to do this work without prepared plans.

At each ordered location the Contractor shall remove and clean the sewer of any debris up to and including manholes on both sides of the section of sewer being reconstructed during and after the completion of the work.

DSS-6 EXISTING CONDITIONS

The Contractor is advised that the Engineer will furnish to the Contractor, where available, plans of the existing collapsed or otherwise defective Storm, Sanitary or Combined Sewers.

The Contractor is further advised that since the reconstructed sewer is to be within the same trench where the existing collapsed or otherwise defective pipe sewer was constructed, it is assumed that the original trench was backfilled with acceptable materials and that no exceptionally large boulders, or other obstructions would hinder or delay the excavation work. If boulders, rip-rap and other large objects as herein before specified in excess of one-half (1/2) cubic yard in volume are encountered during the excavation down to the top of the existing collapsed or otherwise defective pipe sewer, payment for the removal of same will be paid for at the unit price bid for Item No. 70.51EO - EXCAVATION OF BOULDERS IN OPEN CUT. The entire boulder shall be measured where practicable. The resultant void shall be backfilled and paid for under Item No. 73.41AG - ADDITIONAL SELECT GRANULAR BACKFILL.

The average depth to be excavated to subgrade for the reconstructed sewer is eight (8) to nine (9) feet, varying from a minimum depth of four (4) feet to a maximum depth of twelve (12) feet. Deeper sewer excavations to a maximum depth of twenty (20) feet, shall be paid for under Item No.73.31AE2 - ADDITIONAL EARTH EXCAVATION INCLUDING TEST PITS (OVER 12' TO 16' DEPTH), Item No. 73.31AE3 - ADDITIONAL EARTH EXCAVATION INCLUDING TEST PITS (OVER 16' TO 20' DEPTH), Item No. 73.31AE4 – ADDITIONAL EARTH EXCAVATION INCLUDING TEST PITS (OVER 20' TO 24' DEPTH), Item No. 73.31AE5 – ADDITIONAL EARTH EXCAVATION INCLUDING TEST PITS (OVER 24' DEPTH).

DSS-7 PAYMENT FOR WORK PERFORMED

The Contractor shall include in the unit price bid for each item of work, the cost of all labor, equipment, materials, supervision, overhead, profit, insurance, and all other services required to execute and complete each item of work.

Payment will be made at the unit price bid for the various items of work ordered in writing by the Engineer and actually performed and incorporated into the work. The Contractor is advised that the payment for each increment of length of sewer to be replaced will be made at the unit prices bid for each increment of length of sewer to be replaced according to the following schedule:

(a) Minimum fifteen (15) linear feet.
(b) Additional length beyond the minimum fifteen (15) linear feet to a maximum of one hundred (100) linear feet. Fixed unit price as listed in the contract document - bid schedule of prices.
(c) Additional length beyond one hundred (100) linear feet. Fixed unit price as listed in the contract document - bid schedule of prices.

DSS-8 PROCEDURAL ORDERS TO CONTRACTOR

The Contractor shall either give personal attention to the work or employ and retain a competent superintendent or foreman at each and every ordered location while the work is in progress. Instructions given to the superintendent or foreman shall be considered as having been given to the Contractor.

DSS-9 CITY TO NOTIFY CITY DEPARTMENT

At the time the Engineer orders the Contractor to proceed with the work, the Department of Environmental Protection shall notify and transmit a copy of the order to start work to all public and private agencies concerned. These notifications shall be in addition to the Contractors required notifications of public and private agencies as specified herein.

At the start of the work, the Contractor will be furnished with a temporary street opening permit by the Department of Environmental Protection. However, the Contractor shall obtain the prescribed permits from the Department of Transportation within forty-eight (48) hours of beginning the work.

DSS-10 MEASUREMENTS

All measurements shall be made under the supervision of the Engineer. The Contractor's representative shall notify the Engineer when measurements are to be made so the Engineer may be present at that time, the Contractor shall record all measurements and give the Engineer duplicate copies of these measurements.

DSS-11 WORK ORDERED BY THE ENGINEER AND NOT OTHERWISE COVERED IN THE DETAILED SPECIFICATION.

During the course of the work being performed at any ordered location, it may be necessary for the Engineer to order, in writing, extra work not otherwise covered in the work order and in the Detailed Specifications. Payment for extra work for which there are classified bid item(s) shall be made under the unit price bid for the respective bid item(s). Payment for extra work for which there are no specific classified bid item(s) shall be made in accordance with **Articles 25 and 26** of the Contract.

DSS-12 INSPECTION OF MATERIALS FURNISHED

In lieu of the procedure for the inspection of materials to be furnished, as called for in **DIVISION III** of the Standard Sewer And Water Main Specifications, the City will accept certificates from the Contractor's materials suppliers stating that the materials furnished and incorporated in the work at each ordered location, meets the requirement of the appropriate sections of the specifications. Such material certificates shall be provided to the Engineer by the completion date specified in the work order for each ordered location.

DSS-13 DISPOSAL OF WATER FROM TRENCHES (DEWATERING)

(1) DESCRIPTION - The Contractor will be required, at all ordered locations where groundwater is present in the trench and as ordered by the Engineer, to install, maintain and operate a dewatering system to adequately lower the groundwater table to a point below the trench subgrade.

(2) METHODS - Upon obtaining a work order to commence work at any location where dewatering is known to be required, or immediately upon discovery at any location that dewatering is required, the Contractor shall prepare working drawings and designs showing all facets of the proposed dewatering system including but not limited to; soil type, permeability, anticipated discharge amount, wellpoint spacing, depth of well points, size of header pipe, location of discharge point, etc. All of this information shall be submitted to the Engineer for review and approval. Wherever there is insufficient data available to provide accurate information on the soil properties required above, the Contractor shall be permitted to make assumptions and/or educated estimates provided that it is so stated in the submissions.

(3) CRITERIA - The parameters or need for the installation of a dewatering system shall be determined by the Engineer. The location of the water table shall be a minimum of one (1) foot above subgrade and the maximum location shall be seventeen (17) feet above subgrade prior to the use of any wellpoints. These minimum and maximum heights of water table are based upon a

trench depth not exceeding eighteen (18) feet. Lowering of the water level more than seventeen (17) feet is beyond the scope of this item. The use of sump pumps or open trench pumping shall not be considered for payment.

(4) PERMITS - Whenever the Contractor is required to install a temporary dewatering system to lower the groundwater level within the Boroughs of Brooklyn or Queens it will be necessary to obtain a New York State Department of Environmental Conservation (NYSDEC) Long Island Well Permit. Since all work performed under the scope of this project is of an emergency nature the Dewatering Contractor will be required to notify NYSDEC as expeditiously as possible to inform them of the impending work. The Contractor will be required to submit all data and water quality test results to NYSDEC upon their request.

(5) MEASUREMENT AND PRICE TO COVER - There shall be six (6) items under which payment will be made for dewatering. These are as follows:

(a) Mobilization (Dewatering) - The quantity of mobilization to be measured for payment shall be a lump sum measurement for each ordered location mobilization for dewatering performed, complete, as specified or required. The contract price for Item No. DSS008A - MOBILIZATION (DEWATERING) shall be the lump sum price bid for each ordered location mobilization when dewatering is required as specified herein, and shall cover the cost of all labor, materials, equipment, setting up of plant, samples, necessary design computations and drawings, tests and permits required and necessary to mobilize for dewatering at each ordered location, including the furnishing and installing of all other items necessary to complete this work and do all work incidental thereto; all in accordance with the specifications, and as directed by the Engineer.

(b) Header and Discharge Pipe Installation - The quantity of header and discharge pipe to be measured for payment shall be the number of linear feet of header and discharge pipe incorporated in the work, complete, as shown, specified or required. The contract price for Item No. DSS008B - HEADER AND DISCHARGE PIPE INSTALLATION shall be the unit price bid per linear foot for header and discharge pipe installed and utilized at any ordered location and shall cover the cost of all labor, materials, equipment and tests required and necessary to install the header and discharge pipe at each ordered location, including the furnishing and installing of all other items necessary to complete this work and do all work incidental thereto; all in accordance with the specifications, and as directed by the Engineer.

(c) Header and Discharge Pipe Rental - The quantity of header and discharge pipe rental to be measured for payment shall be the number of sections per day of header and discharge pipe incorporated into the work, complete, as shown, specified or required. A section of header and discharge pipe shall be measured as a ten (10) foot length or portion thereof. The contract price for Item No. DSS008C - HEADER AND DISCHARGE PIPE RENTAL shall be the unit price bid per section per day for header and discharge pipe installed and utilized at any ordered location and shall cover all costs required and necessary for rental of header and discharge pipe. Payment under this item will commence upon completion of installation and start of operation of the dewatering system. Payment will cease upon completion of the need for dewatering as approved or ordered by the Engineer.

(d) Wellpoint Installation - The quantity of wellpoint installation to be measured for payment shall be the number of wellpoints incorporated into the work, complete, as shown, specified or required. The contract price for Item No. DSS008D - WELLPOINT INSTALLATION shall be the unit price bid per each for wellpoints installed and utilized at any ordered location and shall cover the cost of all labor, materials, equipment and tests required and necessary to install the wellpoints at each ordered location, including the furnishing and installing of all other items necessary to complete this work and do all work incidental thereto; all in accordance with the specifications, and as directed by the Engineer.

(e) Wellpoint Rental - The quantity of wellpoint rental to be measured for payment shall be the number of wellpoints per day incorporated into the work, complete, as shown, specified or required. The contract price for Item No. DSS008E - WELLPOINT RENTAL shall be the unit price bid per each per day for wellpoints installed and utilized at any ordered location and shall cover all costs required and necessary for rental of wellpoints. Payment under this item will commence upon completion of installation and start of operation of the dewatering system. Payment will cease upon completion of the need for dewatering as approved or ordered by the Engineer.

(f) System Operation - The quantity of system operation to be measured for payment shall be the number of hours of system operation required, during normal working hours and/or as approved or ordered by the Engineer, to operate the dewatering system, complete, as specified or required. The contract price for Item No. DSS008F - SYSTEM OPERATION shall be the unit price bid per hour for system operation at any ordered location and shall cover the cost of all labor, materials, plant and equipment required and necessary to properly operate the dewatering system at each ordered location, including the furnishing and installing of all other items necessary to complete this work and do all work incidental thereto; all in accordance with the specifications, and as directed by the Engineer. Payment under this item will be made based upon the hours the system is in operation and staffed during normal working hours and/or as approved or ordered by the Engineer. No additional or separate payment will be made for any additional costs arising out of labor overtime costs (premium costs) or for any work that is performed beyond normal work hours or on weekends. The costs thereof shall be deemed included in the unit price bid per hour of System Operation.

(6) ADDITIONAL PAYMENT - If Header or Discharge Pipe is required to be buried to provide vehicular and/or pedestrian access as determined in writing by the Engineer, additional payments shall be made as follows; for any excavation, removal of pavements, plating or temporary pavement, backfilling and compaction required, payment shall be made under Item No. 73.31AE2 - ADDITIONAL EARTH EXCAVATION INCLUDING TEST PITS (OVER 12' TO 16' DEPTH); for any additional fill ordered in writing by the Engineer, payment shall be made under Item No. 73.41AG - ADDITIONAL SELECT GRANULAR BACKFILL; and for any permanent pavement restoration required outside the limits of the trench widths and cutbacks, payment shall be made under the appropriate pavement restoration items.

(7) NO ADDITIONAL PAYMENT - No additional payment will be made for any costs associated with demobilization as a result of dewatering. The costs thereof shall be deemed included in the unit prices bid for all associated dewatering items.

DSS-14 TREE CONSULTANT

(1) INTENT

The Contractor shall engage the services of a professional forester or arborist as a Tree Consultant who shall, in anticipation of the potential for work in sidewalk and roadway street areas that will affect trees, prepare a preconstruction report and serve as an advisor to the Engineer and the Contractor. The Tree Consultant shall be responsible, at all ordered locations affecting trees, for checking, inspecting and directing; all construction work around existing trees; all maintenance pruning of trees; all fertilization; and all protection of trees. The Tree Consultant shall also be responsible for ensuring and enforcing compliance of all work with these specifications, and the Department of Parks and Recreation permits, requirements, specifications and standards.

(2) DESCRIPTION

The Tree Consultant shall be a professional forester or arborist approved by the Engineer, who shall, in anticipation of the potential for work in sidewalk and roadway street areas that will affect trees, prepare a preconstruction report advising the Engineer and the Contractor as to the following:

(a) Possible means and methods (including alternate methods) of excavation, backfill and compaction at potential sidewalk and roadway street areas that will affect trees so as to ensure the least impact upon existing trees and compliance with these specifications, and the Department of Parks and Recreation permits, specifications, and standards.

(b) Probable means and methods (including alternate methods) of maintenance pruning operations where necessary.

(c) Assess potential damage or injury to trees and root systems that may be caused by Contractor's operation and establish construction operation procedures for preventing such damage or injury.

(d) And any other procedures required to satisfy these specifications, and the Borough Forester's requirements.

The Tree Consultant shall be required, at all ordered locations affecting trees, to be present at all times during the Contractor's construction operation to ensure, direct and enforce compliance by the Contractor with these specifications, and all Department of Parks and Recreation permits, requirements, specifications and standards.

The Tree Consultant shall be a person independent of and not associated with those persons performing tree pruning, protection and fertilization operations under this contract.

The Tree Consultant shall, at all ordered sidewalk street locations affecting trees, personally witness all; sidewalk, driveway, curb and roadway removal; excavation, backfill and compaction work; and tree pruning, protection and fertilization. The Tree Consultant shall, at all ordered roadway street locations affecting trees, personally witness all; excavation, backfill and compaction work; and tree pruning, protection and fertilization. The Tree Consultant shall at each ordered location affecting trees, locate and identify all trees affected and the means and methods to be utilized for their protection. The Tree Consultant shall also approve all Contractor's construction equipment and manner of work. The Tree Consultant shall also assess any damage and recommend corrective action. The Tree Consultant shall identify trees, recommend construction alternatives to save existing trees and shall do all other work required and necessary to ensure compliance with these specifications, and the Department of Parks and Recreation permits, requirements, specifications and standards.

(3) SELECTION PROCESS

Prior to the start of work the Contractor shall submit the name and qualifications of a person whom the Contractor feels would be acceptable as a Tree Consultant.

The Tree Consultant shall submit at this time a proposal describing its relevant experience and general approach towards fulfilling the requirements and objectives of this section.

(4) QUALIFICATIONS

The minimum qualifications required for consideration as the Tree Consultant shall be as follows:

(a) Associate degree in forestry, arboriculture, horticulture, or related plant science field, and five (5) years of full-time professional experience in landscape design and the field supervision of techniques to mitigate damage to existing trees from the negative impacts of construction; or

(b) B.S. in forestry, arboriculture, horticulture, or related plant science field, and three (3) years of full-time professional experience in landscape design and the field supervision of techniques to mitigate damage to existing trees from the negative impacts of construction; or

(c) M.S. in forestry, arboriculture, horticulture, or related plant science field, and one (1) year of full-time professional experience in landscape design and the field supervision of techniques to mitigate damage to existing trees from the negative impacts of construction; or

(d) Arborist certification from the New York State Arborists/International Society of Arboriculture Chapter, Inc., and three (3) years of full-time professional experience in landscape design and the field supervision of techniques to mitigate damage of existing trees from the negative impacts of construction; or

(e) Other state arborist certification recognized by the International Society of Arboriculture or the National Arborist Association, and three (3) years of full-time professional experience in landscape design and the field supervision of techniques to mitigate damage to existing trees from the negative impacts of construction.

(5) SUBMISSION OF REPORTS

Upon approval, the Tree Consultant will be required to submit five (5) copies of the preconstruction report together with all materials and plans required. Reports shall be bound and bear the name of the contract and signature of the preparer.

(6) MEASUREMENT

The quantity to be measured for payment of Item No. DSS006A - TREE CONSULTANT shall be the time, measured in person hours, that the Tree Consultant actually performed work on this contract as specified and to the satisfaction of the Engineer.

(7) PRICE TO COVER

The contract price bid for Item No. DSS006A - TREE CONSULTANT shall be a unit price per person hour and shall cover the cost of all labor, material, plant, equipment, inspection, reports and incidentals required to complete the work, all in accordance with the plans, specifications, standard and as directed by the Engineer and Borough Forester.

DSS-15 TREES TO BE REMOVED AND REPLACED

During the work of reconstructing sewers in sidewalk or mall areas, the Contractor, when ordered in writing by the Engineer and approved by the Parks Department, shall remove trees along the line of the work. The cost of all the labor and materials required to remove trees, as directed, shall be deemed included in the unit prices bid for the respective tree removal items.

Where trees along the line of the work are removed, as directed, the Contractor shall replace such trees with new trees in accordance with the requirements of the Department of Parks and Recreation. The cost of all the labor and materials required to furnish and place new trees, as directed, together with the cutting of tree pits and all work incidental thereto, shall be deemed included in the unit price bid for Item No. 4.16 CA405 - TREES PLANTED, 3" TO 3-1/2" CALIPER, ALL TYPES, IN 4' X 5' TREE PITS.

DSS-16 ADDITIONAL SIDEWALK RESTORATION

The Contractor is notified that during the work of reconstructing sewers at any ordered location, the Engineer may order additional sidewalk reconstruction outside the ordered trench and cutback restoration limits.

The cost of all the labor and materials required to perform this ordered additional existing concrete sidewalk removal and reconstruction outside the ordered sewer and water main trench and cutback

restoration limits, together with all work incidental thereto, shall be deemed included in the unit prices bid for Item No.4.13 AAS - 4" CONCRETE SIDEWALK (UNPIGMENTED), and Item No. 4.13 BAS - 7" CONCRETE SIDEWALK (UNPIGMENTED).

It shall be understood that such sidewalk reconstruction is in addition to and does not include sidewalk restoration included in the unit price bid for the reconstruction of sewers and water mains.

DSS-17 ADDITIONAL ROADWAY RESTORATION

The Contractor is notified that during the work of reconstructing sewers at any ordered location, the Engineer may order additional roadway reconstruction outside the ordered trench and cutback restoration limits.

The cost of all the labor and materials required to perform this ordered additional existing roadway removal and reconstruction outside the ordered sewer and water main trench and cutback restoration limits, together with all work incidental thereto, shall be deemed included in the unit prices bid for Item No. 4.02 CA - BINDER MIXTURE, Item No. 4.02 CB - ASPHALTIC CONCRETE MIXTURE, and Item No. 4.04 H - CONCRETE BASE FOR PAVEMENT, VARIABLE THICKNESS FOR TRENCH RESTORATION, (HIGH-EARLY STRENGTH).

It shall be understood that such roadway reconstruction is in addition to and does not include roadway restoration included in the unit price bid for the reconstruction of sewers and water mains.

DSS-18 METHOD OF PAYMENT

The following items of work herein specified are provided in order to afford the City of New York opportunity to have such work done if found necessary. It shall be understood by the Contractor that the work as specified under any one of these items may be ordered by the City of New York and in the unit quantities found necessary by the Department of Environmental Protection. The City of New York, however, is not bound to order any of the work specified under these items. Payment will be made only for the actual number of unit quantities ordered under each item.

In the execution of any work under any of these items, the Contractor shall see that the work is progressed as quickly as possible and without delay. All labor, equipment and materials necessary for the proper execution and completion of each item of work called for are to be furnished and delivered by and at the cost and expense of the Contractor and the work executed and completed in every detail whether specifically mentioned or not.

The contract prices for Extra Strength Vitrified Pipe Sewers and/or Precast Reinforced Concrete Pipe Sewers shall be the unit price bid per linear foot for each size, kind, class and type of sewer and shall cover the cost of all labor, materials, equipment, samples and tests required and necessary to construct the extra strength vitrified pipe sewers and/or the precast reinforced concrete pipe sewers of the sizes and to the lines and grades as shown, specified, or ordered, including the earth excavation of all materials of whatever nature encountered (See **Section 40.03 - Earth Excavation** and except excavation of concrete encased sewers and other large objects as specified herein); all pumping and work required to eliminate blockages and restore and maintain sewage flow, all sheeting and bracing; pumping; fluming; bridging; decking; breaking down and filling in of abandoned sewer appurtenances; connections; concrete cradle and encasements; maintaining flow in sewers; backfilling; cleaning up; mobilization (except mobilization for dewatering purpose); temporary restoration of street surfaces; support and maintenance of existing City structures that are encountered during excavation (including curbs, stoops, fences, copings, vaults, light poles, etc.); removal of existing collapsed or otherwise defective sewers and their foundation supports of broken stone or concrete cradle; removal, reconstruction and reconnection of existing house sewer connections together with spurs and risers for existing house connections; removal, reconstruction and reconnection of existing basin connections; removing and cleaning the sewer of any debris up to and including manholes on both sides of the section of sewer being reconstructed during and after the completion of the work at any ordered location; permanent restoration of all roadway top courses and base courses within the limits

of trenches and cutbacks; permanent restoration of all sidewalks within the limits of trenches and cutbacks (sidewalks shall be restored in full flag units up to a maximum overall width of ten (10) feet) together with foundation material; permanent restoration of all curbs, malls, medians, pedestrianways and other non-roadway areas within the limits of trenches and cutbacks together with foundation materials; and furnishing and installing all other items necessary to complete this work and do all work incidental thereto, all in accordance with the plans, specifications and standards and as directed by the Engineer. In addition, included in the price hereunder shall be the cost of all labor and materials necessary to construct the concrete cradle so that it shall extend under the existing sewer one and one-half (1-1/2) feet beyond the pipe joints at each end of the reconstructed sewer; and to construct at both ends where the reconstructed sewer joins the existing sewer, joints that shall be encased with a four (4) inch thick concrete encasement, twelve (12) inches long on either side of the joint.

When additional spurs are required and ordered in writing by the Engineer for future house connections, payment shall be made for these in place additional spurs under the prices bid for Item No. 52.31V06P00 - 6" E.S.V.P. SPUR FOR HOUSE CONNECTION ON E.S.V.P. SEWER, and Item No. 52.31V08P00 - 8" E.S.V.P. SPUR FOR HOUSE CONNECTION ON E.S.V.P. SEWER.

When additional risers are required and ordered in writing by the Engineer for future house connections, payment shall be made for these in place additional risers under the prices bid for Item No. 52.21V08 - 8" E.S.V.P. RISER FOR HOUSE CONNECTION, and Item No. 52.21V10 - 10" E.S.V.P. RISER FOR HOUSE CONNECTION.

When basin connections are required and ordered in writing by the Engineer to be relayed in a new location, payment shall be made for these in place basin connections under the price bid for Item No. 52.11D12 - 12" DUCTILE IRON PIPE BASIN CONNECTION or 52.11D12C – 12" DUCTILE IRON PIPE BASIN CONNECTION (CHUTE CONNECTION WORK ONLY), 52.11D12D - 12" DUCTILE IRON PIPE BASIN CONNECTION FOR MODIFICATION AND/OR REPLACEMENT OF CATCH BASINS, 52.11V12 – 12" EXTRA STRENGTH VIRTIFIED PIPE BASIN CONNECTION, 52.11V12C – 12" EXTRA STRENGTH VIRTIFIED PIPE BASIN CONNECTION (CHUTE CONNECTION WORK ONLY), 52.11V12D – 12" EXTRA STRENGTH VIRTIFIED PIPE BASIN CONNECTION FOR MODIFICATION AND/OR REPLACEMENT OF CATCH BASIN.

Payment for in place additional steel reinforcing bars required and ordered in writing by the Engineer shall be made under the price bid for Item No. 73.51AS - ADDITIONAL STEEL REINFORCING BARS.

Payment for in place additional select granular backfill required and ordered in writing by the Engineer shall be made under the price bid for Item No. 73.41AG - ADDITIONAL SELECT GRANULAR BACKFILL.

Payment for in place additional brick masonry required and ordered in writing by the Engineer shall be made under the price bid for Item No. 73.11AB - ADDITIONAL BRICK MASONRY.

Payment for in place standard manholes required and ordered in writing by the Engineer, shall be made under the prices bid for Item No. 51.21S0A1000V - STANDARD MANHOLE TYPE A-1, Item No. 51.21S0A2000V - STANDARD MANHOLE TYPE A-2, Item No. 51.21S0B1000V - STANDARD MANHOLE TYPE B-1, Item No. 51.21S0B2000V - STANDARD MANHOLE TYPE B-2, Item No. 51.21S0C1000E – STANDARD MANHOLE TYPE C-1 ON EXISTING SEWER, Item No. 51.21S0C2000E – STANDARD MANHOLE TYPE C-2 ON EXISTING SEWER Item No. 51.31S00100E – STANDARD DROP-PIPE MANHOLE TYPE I ON EXISTING SEWER, Included in the respective prices bid shall be the cost for the removal of existing manholes.

Payment for in place standard catch basins required and ordered in writing by the Engineer shall be made under the price bid for Item No. 51.41S001 - STANDARD CATCH BASIN, TYPE 1. Included in the respective prices bid shall be the cost for the removal of existing catch basinsPayment for excavation of boulders in open cut required and ordered in writing by the Engineer shall be made under the price bid for Item No. 70.51EO - EXCAVATION OF BOULDERS IN OPEN CUT.

Payment for in place planted trees required and ordered in writing by the Engineer, shall be made under the price bid for Item No. 4.16 CA405 - TREES PLANTED, 3" TO 3-1/2" CALIPER, ALL TYPES, IN 4' X 5' TREE PITS. Included in the price bid shall be the cost for tree pits, fertilizer, stakes and wire, topsoil, etc.

Payment for additional earth excavation required and ordered in writing by the Engineer, shall be made under the prices bid for Item No. 73.31AE2 - ADDITIONAL EARTH EXCAVATION INCLUDING TEST PITS (OVER 12' TO 16' DEPTH), Item No. 73.31AE3 - ADDITIONAL EARTH EXCAVATION INCLUDING TEST PITS (OVER 16' TO 20' DEPTH), Item No. 73.31AE4 - ADDITIONAL EARTH EXCAVATION INCLUDING TEST PITS (OVER 20' TO 24' DEPTH) and Item No. 73.31AE5 - ADDITIONAL EARTH EXCAVATION INCLUDING TEST PITS (OVER 24' DEPTH) Included in the prices bid shall be the cost for additional sheeting, bracing and pumping required beyond the limits hereinbefore mentioned.

Payment for in place stone ballast required and ordered in writing by the Engineer, shall be made under the price bid for Item No. 70.71SB - STONE BALLAST. Included in the price bid shall be the cost for additional excavation for placement of stone ballast.

Payment for in place additional concrete required and ordered in writing by the Engineer, shall be made under the price bid for Item No. 73.21AC - ADDITIONAL CONCRETE.

Payment for maintenance and protection of traffic required and ordered in writing by the Engineer shall be made under the price bid for Item No. 6.70 - MAINTENANCE AND PROTECTION OF TRAFFIC. Included in this item will be payment for making the area safe for residents and for pedestrian and vehicular traffic within the initial response time.

Payment for maintenance of site required and ordered in writing by the Engineer shall be made under the price bid for Item No. 7.13 A - MAINTENANCE OF SITE.

Payment for in place fencing required and ordered in writing by the Engineer, shall be made under the price bid for Item No. 70.31FN - FENCING.

Payment for television inspection and digital audio-visual recording of sewers required and ordered in writing by the Engineer shall be made under the price bid for Item No. 53.11DR - TELEVISION INSPECTION AND DIGITAL AUDIO-VISUAL RECORDING OF SEWERS.

Payment for removal of trees required and ordered in writing by the Engineer, shall be made under the prices bid for Item No. 4.16 AA - TREES REMOVED (4" TO UNDER 12" CALIPER), Item No. 4.16 AB - TREES REMOVED (12" TO UNDER 18" CALIPER), Item No. 4.16 AC - TREES REMOVED (18" TO UNDER 24" CALIPER), and Item No. 4.16 AD - TREES REMOVED (24" CALIPER AND OVER).

Payment for maintenance tree pruning required and ordered in writing by the Engineer, shall be made under the prices bid for Item No. 4.18 A - MAINTENANCE TREE PRUNING (UNDER 12" CALIPER), Item No. 4.18 B - MAINTENANCE TREE PRUNING (12" TO UNDER 18" CALIPER), Item No. 4.18 C - MAINTENANCE TREE PRUNING (18" TO UNDER 24" CALIPER), and Item No. 4.18 D - MAINTENANCE TREE PRUNING (24" CALIPER AND OVER).

Payment for 8-inch, 12-inch and 20-inch water main offsets and replacements required and ordered in writing by the Engineer due to water mains crossing sewer trenches and water mains interfering with sewer trenches shall be made under the prices bid for the various water main items provided in the contract for water main work actually performed.

Payment for photographs required and ordered in writing by the Engineer, shall be made under the price bid for Item No. 10.32A - PHOTOGRAPHS.

Payment for removal of abandoned tracks required and ordered in writing by the Engineer, shall be made under the price bid for Item No. 75.11RT - REMOVAL OF ABANDONED TRACKS.

DSS-19 GUARANTEED MINIMUM

In the event the Contractor is not issued any Work Orders hereunder, the City agrees to pay, and the Contractor agrees to accept, a minimum fee of two thousand dollars ($2,000.00). The Contractor further agrees that under such circumstances, the Contractor has no action for damages or for loss of profits against the City.

C. REVISIONS TO THE SPECIFICATIONS FOR TRUNK MAIN WORK

1) **Refer** to **Part 1 – Furnishing And Delivering Steel Pipes And Appurtenances 30 Inches In Diameter And Larger, Section 11. Fabrication:,** Page 4;
Add the following to **Section 11:**

All steel water mains shall be spiral welded pipes, and all steel water main fittings shall be fabricated from qualified spiral welded pipe. Can type pipe is not acceptable except for fabrication of tees and reducers.

2) **Refer** to **Part 1 – Furnishing And Delivering Steel Pipes And Appurtenances 30 Inches In Diameter And Larger, Section 13. Special Fittings:,** Page 5;
Add the following to **Section 13:**

The steel reducer shall have a length of seven (7) feet for every twelve (12) inches reduction in diameter.

D. SPECIAL PROVISIONS

The following shall become a part of and apply to the contract:

(1) TRANSPORTATION FOR THE ENGINEER:

(A) General Requirements - The Contractor shall be required to furnish two (2) vehicles to be used by New York City Department of Environmental Protection (DEP) personnel as assigned by the Bureau Director of the Department, during the life of the contract. No direct payment will be made for the vehicle(s), or associated costs. All costs shall be deemed included in the prices bid for all scheduled contract items.

(B) Vehicle Specification - The contracted vehicle(s) shall be a hybrid powered SUV and shall not be over two (2) years in age and have under 30,000 miles or approved equal as determined by DEP's Director of Fleet Services; and shall be equipped with a standard equipment package, and meet the following minimum specification:

(1) Engine:	Manufacturer's Standard 4 or 6-Cylinder
(2) Transmission:	Automatic
(3) Drive:	Manufacturer's Standard Front Wheel
(4) Steering:	Power
(5) Air Conditioning:	Factory Installed
(6) Body:	4-Doors
(7) Color:	Manufacturer's Standard White
(8) Mirror:	Left and Right
(9) Radio:	AM/FM
(10)Electric Rear Window Defogger:	Factory Installed
(11)Brakes:	Anti-Lock
(12)Air Bag:	Both Driver and Passenger Side
(13)Power Windows and Locks:	Factory Installed
(14)Two (2) sets of keys:	Required
(15)Fire Extinguisher:	Required
(16)First Aid Kit:	Required

(C) Inspection And Delivery - Within ten (10) business days of receipt of notice of award for the contract services, the Contractor shall provide information on the proposed vehicle(s) to DEP Fleet Services. Fleet Services will determine if the vehicle(s) meet the minimum requirements of the specification requirements. After written approval from Fleet Services is received, the Contractor shall make arrangements with Fleet Services for delivery to Fleet Services. The Contractor shall provide all required documents to accomplish registration in the City of New York's name. The documents required for submission to register the vehicle(s) in the City of New York's name will be determined by the Contractor's vehicle(s) procurement scenario.

Scenario 1: For NEW vehicle(s) procured in New York State. The Contractor shall provide the following original documents:

(1) Proof Of Corporation
(2) MV50 - Signed
(3) Certificate Of Origin
(4) MV82 - Signed (Box 3 authorizing The City to register the vehicle)

Scenario 2: For USED vehicle(s). The Contractor shall provide the following original documents):

(1) Proof Of Corporation
(2) Certificate Of Title
(3) MV82 - Signed (Box 3 authorizing The City to register the vehicle)

(D) Other Requirements And Provisions - The Contractor shall provide fuel, oil, proper maintenance, tires and replacement parts, to keep the vehicle(s) in a safe operating condition, and shall undertake all repairs, including repairs arising from vandalism, accidents, or other damages. A Gas Company Card shall be furnished with each vehicle for fueling purposes. In the event that any vehicle requires maintenance or repairs which cannot be completed the same day, a comparable replacement vehicle shall be provided for use while the vehicle is out of service. If the vehicle is lost or stolen, the Contractor shall replace the vehicle within five (5) business days with a comparable approved vehicle.

The vehicle(s) shall be provided for the entire duration of this contract, and shall be returned to the Contractor within thirty (30) days after final acceptance of work or twelve (12) months after substantial completion, whichever comes first. For the purpose of this contract, substantial completion shall be when all contract work, with the exception of Punch List Work, is completed. Contractor vehicle(s) provided pursuant to this contract shall remain the property of the Contractor throughout the contract period. The vehicle(s) shall be registered in the City's name. If leased vehicles are provided, the Contractor shall obtain from the leasing company the necessary documents allowing the vehicle to be registered as an official City of New York vehicle. The Contractor shall provide insurance for vehicle as set forth in Schedule "A".

The vehicle(s) service repair facility shall be industry licensed and bonded.

All required transmittals to Fleet Services shall be made as follows:

NYC Department of Environmental Protection
Division of Fleet Services
59-17 Junction Boulevard, 20th Floor
Flushing, New York 11373
Telephone No.: (718) 595-4915
Fax No.: (718) 595-3022
Email: MPETRUCCELLI@DEP.NYC.GOV

When the vehicle is no longer required under this contract, it shall be de-registered by the City and immediately returned to the Contractor.

(2) PRICES TO INCLUDE: No direct payment will be made for costs incurred in complying with the foregoing Special Provisions. All said costs will be deemed included in the prices bid for all scheduled contract items.

END OF THIS SECTION
This Section consists of thirty five (35) pages.

NO TEXT ON THIS PAGE

EP7 - PAGES

GAS COST SHARING (EP-7) STANDARD SPECIFICATIONS

NOTICE

THE PAGES CONTAINED IN THIS SECTION (EP7-PAGES) REPRESENT THE GAS COST SHARING WORK THAT SHALL APPLY TO AND BECOME A PART OF THE CONTRACT.

(NO TEXT ON THIS PAGE)

TABLE OF CONTENT

I - NOTICE TO ALL BIDDERS; GAS COST SHARING WORK

II - GENERAL PROVISIONS; GAS COST SHARING WORK

1. General
2. Gas Interferences And Accommodations
   2a. Water Main Accommodations
   2b. Sewer Accommodations
3. Quantity Overruns, EP-7 Funded Bid Items
4. Changes And Extra Work
5. Excavation
6. Backfilling And Street Restoration
7. Non-Responsive Bids
8. Minimum Clearances
9. Work By Facility Operator
10. Materials Furnished By Facility Operator
11. Liability And Insurance
12. Width And Depth Of Excavation
13. Depth And Crossing Angles Of Gas Facilities
14. Maintenance Of Traffic For Gas Work
15. Relocated Gas And Temporary Systems Installation
16. Role Of Company Inspector
17. Coordination With Gas Company

III - TECHNICAL SECTION

SECTION 6.01 - Trench Crossings; Support And Protection Of Gas Facilities And Services.
SECTION 6.02 - Extra Excavation For The Installation Of Catch Basin Sewer Drain Pipes With Gas Interferences.
SECTION 6.02.1 - Extra Excavation For The Installation Of Catch Basin Sewer Drain Pipes With Upstream Inverts Greater Than Six (6) Feet.
SECTION 6.03 - Removal Of Abandoned Gas Facilities. All Sizes.
SECTION 6.03.1 - Removal Of Abandoned Gas Facilities With Possible Coal Tar Wrap. All Sizes. (For National Grid Work Only)
SECTION 6.03.1a - Removal Of Abandoned Gas Facilities With Possible Coal Tar Wrap. All Sizes. (For Con Edison Work Only)
SECTION 6.04 - Adjust Hardware To Grade Using Spacer Rings/Adaptors. (Street Repaving.)
SECTION 6.05 - Adjust Hardware To Grade By Resetting. (Road Reconstruction.)
SECTION 6.06 - Special Care Excavation And Backfilling.
SECTION 6.07 - Test Pits For Gas Facilities.
SECTION 6.09 - Trench Excavation and Backfill for New Gas Mains and Services (For National Grid Work Only)
SECTION 6.09a - Trench Excavation and Backfill for New Gas Mains and Services (For Con Edison Work Only)

IV - STANDARD SKETCHES; GAS COST SHARING WORK

NO. 1 - Support Requirements For Gas Mains And Services Crossing Excavation Greater Than 4'-0" Wide At Any Angle
NO. 1A - Support Requirements For Gas Mains Over 16" Diameter Up To And Including 48" Diameter Crossing Excavation At Any Angle
NO. 2 - Typical Methods Of Measurement For Gas Crossings
NO. 3 - Utility Crossings During Catch Basin Chute Connection Pipe Installation
NO. 4 - Utility Crossings During Catch Basin Chute Connection Pipe Installation (Extra Depth)
NO. 5 - Gas Main Encroachment On And/Or Parallel To Excavation Of Unsheeted Trench

V - PRELIMINARY GAS WORK TO BE PERFORMED BY FACILITY OPERATOR

VI - LISTING OF APPROXIMATE LOCATIONS OF EP-7 BID ITEMS QUANTITIES

I - NOTICE TO ALL BIDDERS; GAS COST SHARING WORK

All prospective bidders are hereby advised that, pursuant to the "Gas Facility Cost Allocation Act", ("the Act"), the City of New York has entered into an agreement ("the Agreement") with the gas companies (Con Edison or National Grid (formerly KeySpan Energy Delivery)) operating in their respective areas of the City to "share" the cost of facility relocation and/or support and protection of facilities disturbed by proposed water and/or sewer and related City work specified in this contract. Therefore, bid items, specifications and estimated quantities for the incremental costs of support and protection of certain gas facilities have been included in this contract. The low bid for this contract shall be determined by examining each bid for all work to be performed under this contract including any work of support and protection of gas facilities to be performed. The Contractor shall not seek additional compensation from gas companies except as specifically set forth in its contract.

II - GENERAL PROVISIONS; GAS COST SHARING WORK

1. General:

The Contractor shall perform City work with interferences from existing live and abandoned gas facilities. This shall be defined as utility work. Therefore, this contract includes bid items, specifications and estimated quantities designed to fully compensate him/her for the incremental costs of supporting, protecting, providing accommodations and, avoiding disturbing gas facilities located in the streets shown on the contract drawings. In the event that any other provisions of this contract related to gas facilities (or private utilities) conflict with these provisions, these provisions shall supersede and govern all work related to gas facilities owned by the companies operating in the project area. All utility work, as defined in these specifications, including changes and additions thereto shall be paid solely by the City except when specified otherwise in this contract. Contractor hereby agrees that the facility operator shall not be liable to pay him/her for any work performed including extra utility work. Contractor agrees that its bid prices include all compensation for loss of productivity and efficiency, idle time, delays (including any delays occasioned by negotiation of a contract change), change in operations, mobilization, demobilization, remobilization, added cost or expense, lost of profit, other damages or impact costs that may be suffered by or because of utility work, or the presence of gas facilities in the proximity of City work and that it will not seek additional compensation for these items. All disputes shall be resolved as specified in the contract.

Pursuant to the Act, Agreement, and the New York City Administrative Code, the gas company(ies) has been directed by the Commissioner and is required to perform all maintenance, repairs, replacement, shifting, alteration, relocation, and/or removal work that are not part of this contract. By having bid on this contract, the Contractor understands and agrees that the Commissioner has preasserted any right the City has to require, including the issuance of any directives or so called "order outs" under the New York City Administrative Code, any or all gas companies to maintain, repair, replace, protect, support, shift, alter, relocate, and/or remove all gas facilities that are about to be disturbed by the City contract work. The issuance of additional such directives during the performance of the contract work, where necessary in the sole judgment of the Commissioner, shall be initiated by such Commissioner as set forth in the relevant sections of the Act and Agreement. Contractor further agrees to insert such requirements as set forth herein above into any contracts with its approved subcontractors so that its subcontractors also understand and agree to such contract requirements.

2. Gas Interferences And Accommodations:

During the performance of sewer and water main work funded by the New York City Department of Environmental Protection (NYCDEP), as instructed by the Engineer, the use of any applicable contract bid item is allowed in order to resolve and accommodate all gas facilities interferences with such City work, including the removal of contaminated soil in associated trench excavation. This is in addition to the specified EP-7 bid items in the contract. Payment for such accommodation shall be funded by EP-7 bid item "UTL-GCS-2WS - GAS INTERFERENCES AND ACCOMMODATIONS" (F.S. Fixed Sum). The value of such accommodation shall be computed by multiplying the appropriate unit prices bid to the quantity of work performed, as determined by the Engineer, and applying the total amount thus to be paid

to EP-7 bid item "UTL-GCS-2WS - GAS INTERFERENCES AND ACCOMMODATIONS". When EP-7 bid item "UTL-GCS-2WS - GAS INTERFERENCES AND ACCOMMODATIONS" does not exist, such additional accommodation work shall be at no cost to the City but shall be a matter of adjustment between gas facility operator and Contractor. Private facilities, other than gas, that become in interference due to gas interferences accommodations shall also be accommodated, if so directed by the Resident Engineer, at no additional cost to the City and, provided that its owner agrees to be responsible for all additional costs to Contractor, otherwise, such facility shall be ordered by the City to be maintained, shifted, relocated or replaced by its owner at his/her expenses.

2a. Water Main Accommodations:

When water main construction is to be performed in this contract, Contractor shall be required, if warranted by field conditions, and at locations designated by the Resident or Borough Engineer, to change the vertical or horizontal alignment of water mains including but not limited to all additional labor, material, work method accommodations, furnishing, delivering and laying offset fittings and pipes, etc., necessary in order to complete water main installation and, avoid gas interferences in the project area, including street intersections. Typical work method accommodations shall include, but not be limited to, pier and plate, installation of filter fabric and select fill, etc. Such work shall be performed as directed by the Engineer and in accordance with contract specifications and latest edition of water mains standards and specifications.

2b.Sewer Accommodations:

When sewer construction is to be performed in this contract, Contractor shall be required, if warranted by field conditions, and at locations designated by the Resident or Borough Engineer, to change the horizontal alignment of sewer facilities (if possible) including but not limited to all additional labor, material, work method accommodations, furnishing, delivering and construction of additional manholes or modification of manholes/catch basins, extending chute connections, house connections, using alternate materials and methods, poured-in-place structures, etc., necessary in order to complete sewer installation and, avoid gas interferences in the project area, including street intersections. The term sewer facility shall include, but not be limited to, all sewer pipe and appurtenances, manholes, catch basins, catch basin chutes, etc. Such work shall be performed as directed by the Engineer and in accordance with contract specifications and latest edition of sewer standards and specifications.

3. Quantity Overruns, EP-7 Funded Bid Items:

No quantity overrun, in excess of one hundred twenty five (125) percent, shall be permitted for EP-7 funded bid items (gas) included in this contract; except when Resident Engineer determines that such overruns are caused by field modifications to planned City work, or approved construction methods, or contract scope changes. Overruns not paid by City shall be negotiated and paid to Contractor by gas facility operator who then shall be entitled to reimbursement by NYCDEP under established cost sharing procedures.

4. Changes And Extra Work:

This section is not applicable to work defined under "Emergency Reconstruction Contracts" or so-called "Where and When Contracts" since these projects, by definition, inherently encounter unanticipated gas facilities and cannot be pre-engineered. In all other cases, any contract changes proposed for City work shall also cover and include all associated changes to support and protection of gas facilities affected by such changes to City work. In all other cases where the Contractor finds that City work cannot be performed as planned and specified and/or, as approved because of a need to support, protect and/or alleviate interferences from gas facilities that were not listed and/or shown, or incorrectly shown in contract plans and specifications, he shall immediately notify the Resident Engineer and the facility operators' representative of his findings. Resident Engineer shall promptly examine such claims and determine whether or not such work is covered by contract bid items and /or specifications (contract bid items and specifications shall include city contract items as well as EP-7 items). The Resident Engineer shall also

examine the claim to determine if the application of EP-7 bid item "UTL-GCS-2WS - GAS INTERFERENCES AND ACCOMMODATIONS" is appropriate to resolve the claim. If upon examination, the Engineer determines that such field conditions were unanticipated (not shown and/or listed, or incorrectly shown in contract documents) and are not covered by bid items and contract specifications, he shall then direct the Contractor and the affected facility operator to negotiate the cost of supporting and protecting, and/or alleviating the impact on City work caused by such unanticipated gas facilities with each other with the understanding that the performance of City work shall continue during negotiations. If a cost agreement is reached, the Contractor and facility operator shall adjust such costs between themselves at no additional costs to the City contract. If the Contractor and affected facility operator do not reach an agreement concerning the price to be paid for the extra work within five (5) business days of the Engineer's directive to engage into such negotiations and, after considering: public safety and inconvenience, requirements of laws and regulations applicable to private utilities, integrity of all utility systems, including but not limited to sewer and water, gas, electric, telephone and, cable TV facilities, sound engineering practices, cost (long and short term) to all affected parties, and potential City work delays, then the Resident Engineer, depending on nature and severity of interferences with City work, shall either, direct the facility operator to relocate or replace its facilities at its own discretion and cost, reimbursable by NYCDEP under established gas cost sharing procedures or, direct the Contractor to perform the utility work on actual time, material and equipment costs basis pursuant to relevant contract requirements and amendments. Contract bid prices for any applicable items of work involved shall be applied, or converted to an allowance for time and material charges. Changes shall be for affected portions of utility work and, shall be processed with EP-7 funds.

5. Excavation:

All excavators shall notify the NYC/LI One Call Center at 1-800-272-4480 at least two (2) working days, not including the day of the call, but not more than ten (10) working days in advance of the start of any excavation work. The gas company(ies) will mark out its facilities within the project limits and provide Construction Inspector(s) during all excavation work in close proximity (within twelve (12) inches) to gas facilities. The Contractor shall exercise extreme caution when excavating in the vicinity of any gas facilities. Hand excavation shall be performed within twelve (12) inches of gas facilities. The Contractor prior to excavating underneath these facilities shall adequately support all gas facilities. Standard support details for gas facilities have been included in the specifications. Any damage to gas facilities shall be reported immediately to the gas company(ies). The Contractor shall be responsible for all cost associated with repairs made necessary by damages caused by his operations.

6. Backfilling And Street Restoration:

Backfilling operations and street restorations shall be in accordance with contract requirements.

7. Non-Responsive Bids:

Every gas (EP-7) bid item has a suggested "Not less than" value per unit indicated on contract bid sheet. Bids resulting in cost of less than suggested for EP-7 items are hereby prohibited and if submitted shall be considered NON-RESPONSIVE.

8. Minimum Clearances:

Clearance requirements for City work shall govern and supersede any clearance requirement of gas facility operator. Therefore, a minimum of twelve (12) inches clearance between private utilities and City water mains, sewers or related structures to be installed in this contract shall be maintained. When this clearance is not attainable, the Resident Engineer may allow a minimum of four (4) inches clearance. With less than twelve (12) inches clearance a neoprene/polyethylene shield (to be provided by facility operator) shall be installed as part of all work item specifications. However, if Resident Engineer determines that City work cannot be performed within allowable clearance and no reasonable City accommodation (no-cost change to City work) is possible, the City shall direct the facility operator to remove, relocate, shift, or alter their facility(ies) pursuant to the New York City Administrative Code.

9. Work By Facility Operator:

The facility operator may find it necessary to perform the following types of work during performance of City work: accommodating a contractor's request for gas facilities modifications (in order to facilitate City contractor's proposed construction method) or, remedial and emergency work on gas facilities proper with their own resources and materials if an approved method of construction for City work causes unanticipated disturbances to gas facilities or, replacing defective gas facilities when they are exposed by the Contractor and their actual conditions are observable by the facility operator. Also included in the above category of defective gas facilities are: the presence of environmental contaminants attributable to the gas facility in or around gas facilities. If such work is deemed required by the facility operator or if facility operator is directed by the City to address such deficiencies at any time during the course of construction, the Contractor shall modify the construction schedule at no cost to the City and allow the facility operator five (5) business days to perform such work without interferences. Additional costs to the facility operator (in cases of accommodations) or, Contractor (in cases of defective gas facilities) due to such gas work, if any, shall be the responsibility of the parties involved and not of the City. Such costs shall be a matter of adjustment between the Contractor and the facility operator.

10. Materials Furnished By Facility Operator:

It shall be the Contractor's responsibility to inspect material to be installed by him immediately upon delivery and advise the facility operator through its authorized representative, of all damaged materials. The Contractor at no additional costs to the City or the facility operator shall replace any material that is damaged or lost after the Contractor's inspection.

11. Liability And Insurance:

Notwithstanding the provisions of this contract, the existing division of liabilities to third parties shall remain the same as between the City and the company. Therefore, it is specifically agreed by the City, company and Contractor (by bidding on this contract) that for the purpose of any liabilities to third parties, that the City contractor performing work directly and physically relating to gas company facilities in this project, shall be deemed an agent of the company and not an agent of the City, the New York City Municipal Water Finance Authority, or the New York City Water Board. Contractor shall include the company as an additional insured on all insurance policies maintained to comply with the City's insurance requirements.

12. Width And Depth Of Excavation:

Contractor shall not be authorized to deliberately change trench or excavation widths and/or depth specified without Engineer's approval. Enlargement of any side of excavation up to eighteen (18) inches beyond pay limits (or inside face of sheeting) requested by the Contractor for the installation of certain types of sheeting may be granted. However, such enlargements or those greater than allowable shall not be approved when, in the sole judgment of the City, field conditions allow the water mains and sewer work to be performed within the limits specified and, the sole purpose of such enlargement request is to impact adjacent utilities (public or private) whose support and protection are part of this contract. Any approval shall be given at no additional cost to the City contract, including EP-7 funding, and all costs associated with unauthorized enlargements shall be the sole responsibility of the Contractor.

13. Depth And Crossing Angles Of Gas Facilities:

Where gas facilities are shown (or specified as) crossing proposed alignment of sewers, water mains, catch basins and chute connections or any other proposed excavations at specific angles (as measured off plans or sketches or specified in contract), it shall be understood that actual field measurements may deviate (plus or minus) forty-five (45) degrees from those shown or specified. The cover, or depth from street surface to top of facilities, shall be as shown or specified in contract documents, no deviation is to be assumed. Where gas facilities are not shown on contract documents, but their support and protection are otherwise included in this contract then, all references to facilities crossing at "various angles and depth" in the gas sections shall mean that such facilities are crossing sewer, water, catch basin and, catch basin chute, and other excavations at a ninety (90) degree angle to the proposed sheeting line or side of

excavation (for unsheeted trenches) with an allowable deviation of forty-five (45) degrees in any direction, except for catch basin chute excavation where the allowable deviation shall be sixty (60) degrees. Where the cover is not noted or specified, the bottom face of such facilities shall be assumed to be crossing catch basin chutes at a depth of three (3) foot eight (8) inches or less from the street surface. Paragraph No. 2 above shall apply in cases of distribution water main construction. Appropriate bid items and specifications are provided for cases where angle and depth are greater than stated above. This section also applies to work defined in "Emergency Reconstruction Contracts" or so-called "Where and When Contracts". These contracts are not pre-engineered and consequently have no drawings, sketches or determined locations and so, gas facilities encountered will be crossing existing and proposed sewer, water, catch basin/catch basin chutes and all appurtenances at various angles and depths.

14. Maintenance Of Traffic For Gas Work:

All work pertaining to gas bid items and specifications shall be performed within the contract maintenance of traffic plan as specified in the contract document. The bid price for the Maintenance and Protection of Traffic shall cover all work pertaining to gas items. The City shall make compensation for additional maintenance and protection of traffic items in connection with gas item of work only when such additional work is deemed reasonable and necessary by the Resident Engineer and is approved by him prior to its performance.

15. Relocated Gas And Temporary Systems Installation:

In cases where the Contractor is allowed to select the location for temporary construction such as, installation of dewatering headers, wells, well points, etc., he shall not disturb any gas facilities shown on sketches provided in this section. The only exception shall be, if the affected gas company agrees to such relocation and provided that the cost of such relocation is a matter of adjustment between the company and Contractor, and at no cost to the City.

16. Role Of Company Inspector:

In any case in which the City elects to perform some or all support and protection work with its own employees, personnel or contractors, the facility operator shall provide onsite inspectors to approve and certify such support and protection work (exclusive of City accommodations) performed by the City's own employees, personnel, and contractors. Facility operator's inspectors are not authorized to direct City contractor during the performance of contract work. They shall act through the City Resident Engineer and provide him/her required approvals and certifications, prior to preparing partial payments of EP-7 items, in a format and frequency to be prescribed by the appropriate City Head of Construction.

17. Coordination With Gas Company:

The Contractor shall be required to notify the gas company(ies), in writing, at least two (2) weeks prior to the start of final paving in order to allow companies to complete any unfinished gas work located within the area to be paved. Every effort shall be made to maintain gas service with minimum inconvenience to the public.

III - TECHNICAL SECTION

SECTION 6.01 - Trench Crossings; Support And Protection Of Gas Facilities And Services.

1. Description:

Under this section, the Contractor shall provide all labor, materials, equipment, and incidentals required to

support and/or protect the integrity of gas mains, services and appurtenances of any sizes, configurations, and operating pressures crossing trench excavations above subgrade for planned construction of sewers and water mains facilities. A gas service shall be defined as a gas pipe of three (3) inches in diameter or less branching from the main to a customer pick up point or property valve box. A gas main may be any size pipe that is part of a distribution or transmission network other than services described above. Crossings shall be defined as gas facilities spanning the width of excavation (one side to the other side). These crossings may be at various angles and depth as shown on "Gas Cost Sharing Work Standard Sketches Nos. 1 and 1A", and as specified in "General Provisions; Gas Cost Sharing Work Paragraph No. 13" and, at the locations shown or listed in contract documents. The gas company operating in the area, (facility operator), owns these facilities. The work shall be performed in accordance with contract specifications, plans, and at the directions of the Resident Engineer in consultation with the authorized representatives of the facility operator.

2. Method Of Construction:

A. Protection: In general, the gas facilities shall be protected as required by New York State Industrial Code 753. In particular, the Contractor shall use hand excavation methods (pick and shovel or hand held power tools) directly below the pavement base to expose the gas facilities (marked out by facility operators) and to ascertain the clearances and cover of the facilities with respect to the proposed excavation. Upon exposing the affected facilities sufficiently, at the discretion of the Resident Engineer, to ascertain the foregoing, Contractor shall be permitted to proceed with a combination of hand and machine excavation, as appropriate, outside a zone of protection whose limit shall be defined as a perimeter located twelve (12) inches from the outside face of each gas facility crossings (See "Gas Cost Sharing Work Standard Sketch No. 2"). If the facilities are in direct interference with City work, meaning that "Minimum Clearances" described in "General Provisions; Gas Cost Sharing Work Paragraph No. 8" cannot be maintained, and excavation has to be temporarily or permanently abandoned then this particular location shall become a test pit and dealt with as specified in Section 6.07, and "General Provisions; Gas Cost Sharing Work Paragraphs Nos. 2 and 8".

B. Support: Gas mains or services crossing excavations equal or less than four (4) feet wide are generally self supporting, unless field conditions as determined by the Resident Engineer require otherwise. The support requirements for gas mains and services crossing excavations greater than four (4) feet wide shall be as shown on the attached "Gas Cost Sharing Work Standard Sketch No. 1" and Contractor shall use sheeting methods that permit the maintenance of gas facilities in their existing locations and configurations. Alternate methods equivalent to those shown on the sketch or accommodations by the facility operator proposed by the Contractor in order to facilitate the execution of the specified work shall be allowable, provided that prior approval is obtained by the Contractor from the Engineer and the facility operator. The support and protection of gas facilities crossings shown on plans, drawings, listings or otherwise identified in this contract shall not be circumvented with the issuance of so called "order outs".

3. Method Of Measurement:

The Contractor shall be paid for supporting and/or protecting gas facilities crossing trench excavations under the appropriate bid items covered by this section. The Contractor shall be directly responsible to the facility operator for the total cost of using any alternate method requiring the use of resources owned by the facility operator. Regardless of the method used, the City shall pay the bid price for the appropriate support and/or protect item of work. The average rate charged by the facility operator for alternate support and protection work such as, disconnecting and reconnecting gas services is listed in attached "Schedule GCS-A".

4. Payment Restrictions:

These items shall not be paid for: gas services crossing unsheeted water main trench excavation; abandoned gas main/services identified by facility operator; gas mains/services crossing trench excavations for fire hydrant branch connections pipes, catch basins and/or chutes (sewer drain pipe), house sewer and/or water services; gas facilities encroaching any face of excavation for sewer and/or

water construction, all of which are covered under other contract sections. Also this item shall not be paid for new gas mains and services crossing water trenches when trenching for such new facilities has been performed by the Contractor in common with trench excavation for City work (overlapping trench limits). The cost of supporting and protecting such gas facilities crossings shall be deemed included in the cost of trench excavation for the new gas facilities. This payment restriction shall apply even if such common trench gas excavation is not part of the contract. The prices bid for items covered by this section represent full compensation to Contractor to completely perform the work described. No other bid items shall be combined with these items in order to pay for gas main and/or services crossing excavations specified herein.

5. Method Of Payment:

Each (Ea.) gas facility crossing trench excavation as described in these specifications shall be counted for payment.

6. Price To Cover:

The cost of timber/steel supports installed for gas facilities shall be included in the bid price. The bid price for each crossing shall also cover all additional supervision, labor, material (except those provided by the facility operator), equipment and insurance necessary to completely maintain the gas facilities without disruption of service to the customers and in accordance with contract plans, specifications and facility operator standards. The price shall also include: changes of method of operations; sheeting modifications where necessary to accommodate the gas facilities crossings; installation and removal of water pipe under gas facilities (so called "snaking"); extra care during excavation (including hand excavation under existing single and multiple gas facilities); extra backfilling and compaction around, over and under gas facilities; installation and removal of sheeting around gas facilities; associated maintenance and protection of traffic; barricades; and traffic plates that may be required to temporarily close and/or complete the work.

SECTION 6.02 - Extra Excavation For The Installation Of Catch Basin Sewer Drain Pipes With Gas Interferences.

1. Description:

Under this item, the Contractor shall provide all labor, materials, equipment, insurance, and incidentals for the extra excavation associated with the installation of catch basin sewer drain pipes (chute) under gas facilities of various sizes crossing the trench excavation at various angles and depth at the locations shown in the contract documents and also, for the support and protection of these facilities during associated excavation and backfill operations. The gas company operating in the area, (facility operator), owns these facilities.

2. Method Of Measurement:

The bid price shall be per location (Each) where extra excavation is required when catch basin sewer drain pipes are installed at an upstream invert depth lower than four (4) feet (up to a maximum of six (6) feet) from the proposed pavement grade because the bottom faces of interfering gas mains and appurtenances are located at a depth greater than three (3) foot eight (8) inches from proposed pavement surface (See "Gas Cost Sharing Work Standard Sketch No. 4").

3. Method Of Construction:

Incremental cost responsibility for chute excavation is determined by the first private facility encountered starting from catch basin structure proper and that prevents the installation of the chute connection at an upstream cover less than or equal to three (3) feet or any other minimum cover required to avoid City facilities (e.g. water, sewer, etc.) as directed by the Resident Engineer.

4. Payment Restrictions:

This item shall not apply and related bid item shall not be paid in cases where:

A. Upstream invert chute is more than six (6) feet deep because of gas facilities.

B. Chute cannot be installed above existing gas facilities because of interferences with other private facilities that are not otherwise covered under this contract, regardless of upstream invert depth.

The above cases shall be at no cost to the City, but shall be a matter of adjustment between the Contractor and the facility operator(s).

5. Price To Cover:

The bid price shall cover the additional cost of all additional supervision, labor, materials, equipment and insurance, to complete the installation of catch basins and associated sewer connections in accordance with the contract plans and specifications. The price shall include: excavation by hand around and under single and multiple gas facilities; locating, supporting and protecting gas facilities; backfilling and all other items necessary to perform all work incidental thereto including: installation and removal of drain pipe under gas facilities ("snaking"); widening of trenches to facilitate the above work; subsequent additional backfill and pavement restoration; modifying precast catch basin window to accommodate connection; changing sheeting method and configuration to accommodate gas facility crossings; maintenance and protection of traffic; barricades; and installation of traffic plates that may be required to temporarily close and/or complete the work. The price shall not include removal of ledge rock and/or excavation of boulders in open cut.

SECTION 6.02.1 - Extra Excavation For The Installation Of Catch Basin Sewer Drain Pipes With Upstream Inverts Greater Than Six (6) Feet.

1. Description:

Under this item, the Contractor shall provide all labor, materials, equipment, insurance and incidentals for the extra excavation of catch basin chutes where the upstream invert is greater than six (6) feet under gas facilities of various sizes crossing the trench excavation at various angles and depth at the locations shown in the contract documents or as determined by field conditions and also, for the support and protection of these facilities during the associated excavation, sheeting and backfilling operations.

2. Method Of Measurement:

The bid price shall be per location (Each) where extra excavation and sheeting is required when the catch basin chute installed at an upstream invert depth lower than six (6) feet from the proposed pavement grade because the bottom faces of the interfering gas mains and appurtenances are located at a greater depth than three foot eight inches from the proposed pavement surface only.

3. Method Of Construction:

Incremental cost responsibility for chute excavation is determined by the first private facility encountered during such excavation when initiated from catch basin structure and that prevents the installation of the chute at an upstream cover less than or equal to three (3) feet or any other cover required to avoid City facilities as directed by the Resident Engineer.

4. Payment Restriction:

This item shall not apply and related bid item shall not be paid in cases where:
Upstream invert chute is less than or equal to six (6) feet deep because of gas facilities. Section 6.02 shall be paid.

5. Price To Cover:

The bid price shall cover the additional cost of all supervision, labor, materials, equipment and insurance to complete the installation of catch basin and associated sewer connections in accordance with the contract plans and specifications. The price shall include: excavation by hand around and under single and multiple gas facilities; locating, supporting and protecting gas facilities incidental thereto; widening of trenches to facilitate the above work; subsequent additional backfilling and pavement restoration; modifying pre-cast basin window to accommodate connection; the installation of catch basin with deeper sumps as specified; additional sheeting and changes in sheeting method and configuration to accommodate gas facility crossings; maintenance and protection of traffic; barricades; and installation of traffic plates that may be required to temporarily close and/or complete the work.

SECTION 6.03 - Removal Of Abandoned Gas Facilities. All Sizes.

1. Description:

Under this section the Contractor shall provide all labor, materials, equipment, insurance and, incidentals required for the removal of abandoned gas mains, services, or appurtenances thereof, located within the street shown on the contract plans, owned by gas company operating in the project area (facility operator), used or to be used for or in connection with or to facilitate the conveying, transportation, distribution or furnishing of gas (natural or manufactured or mixture of both) for light, heat, or power, but does not include property used solely for or in connection with business of selling, distributing or furnishing of gas in enclosed containers. Such removal shall include only abandoned gas facilities that interfere with (i.e. cause additional work) City work.

2. Determination Of Operating Status Of Gas Facilities:

The Contractor shall notify facility operator, as required by New York State Industrial Code 753. Gas facilities shall not be removed without the approval of the facility operator whose authorized representative shall certify in writing (specific facility or area wide facilities certification) and in a timely manner acceptable to the Resident Engineer that abandoned facilities are free of combustible gas and any other environmental contaminants prior to removal. The Resident Engineer shall rely on facility operator's certification. The facility operator may request the excavation of test pits (See Section 6.07) for this determination ahead of City work and, Contractor shall provide safe access, facilitate and permit facility operator to enter test pit excavations for the purpose of testing gas facilities to be removed by the Contractor. However, facility operator may prefer to make this test during performance of City work, in order to issue the above certification. This shall be permitted provided that it is agreed that additional costs, if any resulting from this choice shall be a matter of adjustment between the Contractor and facility operator only, and at no cost to the City.

3. Restrictions:

The facility operator shall be solely responsible for its contaminated gas facilities, surrounding contaminated soil and their disposal and abatement procedures, unless contract bid items are applicable and provided for such work. In such cases, the quantity removed shall be charged to EP-7 bid item "UTL-GCS-2WS - GAS INTERFERENCES AND ACCOMMODATIONS" at the City bid prices.

4. Method Of Measurement:

Abandoned gas pipeline removal shall be measured for payment per linear foot of pipe and appurtenances removed.

5. Price To Cover:

The price shall cover all additional cost of supervision, labor, materials, equipment, and insurance necessary to complete this work in accordance with the contract plans and specifications, including excavation by hand around and under other City and facility operator owned properties and, where necessary, support and protection of such properties. The price shall also cover breaking, cutting, and/or burning of abandoned gas pipes and their disposal from the site; sealing open ends remaining in the excavation with concrete or caps (caps to be provided by the facility operator) and backfilling of the area where the pipeline has been removed with clean backfill. The price shall also include any required dump charges. This item does not include any type of extra excavation, backfilling, compaction, pavement removal and restoration associated with abandoned gas facilities removal, all of which are covered under Section 6.06.

SECTION 6.03.1 - Removal Of Abandoned Gas Facilities With Possible Coal Tar Wrap. All Sizes. (For National Grid Work Only)

1. Description:

Under this section the Contractor shall provide all labor, materials, equipment, insurance and, incidentals required for the removal of abandoned gas mains, services or appurtenances thereof, located within the street shown on the contract plans, owned by the gas company operating in the project area (facility operator), used or to be used for or in connection with or to facilitate the conveying, transportation, distribution or furnishing of gas (natural or manufactured or mixture of both) for light, heat, or power, but does not include property used solely for or in connection with business of selling, distributing or furnishing of gas in enclosed containers. Such removal shall include only abandoned gas facilities that interfere with (i.e. cause additional work) City work. These gas facilities may be coated with Coal Tar Wrap and so, may require special handling and disposal methods as specified in National Grid Standard Operating Procedure 12-2, Coal Tar Wrap Handling and 12NYCRR56.

2. Determination Of Operating Status Of Gas Facilities:

The Contractor shall notify facility operator, as required by New York State Industrial Code 753. Gas facilities shall not be removed without the approval of the facility operator whose authorized representative shall certify in writing (specific facility or area wide facilities certification) and in a timely manner acceptable to the Resident Engineer that abandoned facilities are free of combustible gas and any other environmental contaminants prior to removal. The Resident Engineer shall rely on the facility operator's certification. The facility operator may request the excavation of test pits (See Section 6.07) for this determination ahead of City work and, the Contractor shall provide safe access, facilitate and permit facility operator to enter test pit excavations for the purpose of testing gas facilities to be removed by the Contractor. However, the facility operator may prefer to make this test during performance of City work, in order to issue the above certification. This shall be permitted provided that it is agreed that additional costs, if any, resulting from this choice shall be a matter of adjustment between the Contractor and the facility operator only, and at no cost to the City contract. Should such investigation result in the determination that the abandoned gas facilities do not contain Coal Tar Wrap then the removal of said facilities shall be covered under separate item (See Section 6.03).

3. Requirements:

The City Contractor shall excavate abandoned gas facility sufficiently, either in its entirety, or at locations determined by Contractor to allow the removal of Coal Tar Wrap (if present on the abandoned gas facility) and to facilitate the safe extraction of manageable lengths of abandoned pipe without damage to adjacent facilities, utilities or City structures either parallel to or crossing above or below abandoned gas facility. The Contractor is to allow access to the designated cutting points within the Contractor's trench by authorized National Grid personnel who will remove the Coal Tar Wrap as per National Grid procedures. This work by National Grid personnel shall be performed in a timely fashion and shall not unduly impede the Contractor's progress and/or productivity. Upon completion of the coating removal, the Contractor shall be allowed to cut, burn or grind the gas facility and remove the section of abandoned pipe. The

Contractor at a site designated by the Contractor shall stockpile the removed pipe. The facility operator will be responsible to provide trucking and disposal services with its own personnel and shall remove the stockpiled pipes during off hours or during such time as agreed to by the Contractor. Since the pipe removed will remain the property of the facility operator and is to be disposed of by the facility operator, the facility operator shall be responsible for any required notifications, filings, dump charges and incidentals associated with the disposal of abandoned gas facilities found to contain Coal Tar Wrap.

4. Method Of Measurement:

Abandoned gas pipeline removal shall be measured for payment per linear foot of pipe and appurtenances removed.

5. Price To Cover:

The price shall cover all additional cost of supervision, labor, materials, equipment and insurance necessary to complete this work in accordance with the contract plans and specifications, including excavation by hand around and under other City and facility operator owned properties and, where necessary, the support and protection of such properties. The cost shall also include hand excavation in the area(s) of proposed abandoned pipe cut(s), cutting and/or burning of abandoned gas pipes and stockpile of removed sections of abandoned pipe and associated maintenance and protection of traffic, blocking and temporary fencing if required. The unit price shall also cover sealing open ends remaining in the excavation with concrete or end caps (end caps to be provided by the facility operator) and backfilling of the area where the abandoned pipeline has been removed with clean backfill material. This item does not include any type of extra excavation, backfilling, compaction, pavement removal and/or restoration (temporary and permanent) associated with abandoned pipe removal ("lost trench"), all of which are covered under separate Section 6.06. The price shall also include allowance for any loss of productivity by the Contractor due to required facility operator work to remove pipe coating and prepare pipe for cutting as well as any change in Contractor's excavation method, additional trucking and/or stockpiling costs.

SECTION 6.03.1a - Removal Of Abandoned Gas Facilities With Possible Coal Tar Wrap. All Sizes. (For Con Edison Work Only)

1. Description:

Under this section the Contractor shall provide all labor, material, equipment, insurance and, incidentals required to prepare abandoned gas mains, services and appurtenances thereof located within the street shown on contract plans, owned by the gas company operating in the project area (facility operator), for removal due to interference with proposed City work. These abandoned gas facilities were, at one time, used for or in connection with or to facilitate the conveying, transportation, distribution or furnishing of gas (natural, manufactured or a combination of both) for light, heat, or power, but does not include property used solely for or in connection with business of selling, distribution or furnishing of gas in enclosed containers. Such preparation for removal shall include only abandoned gas facilities that interfere with (i.e. cause additional work) City work. These gas facilities may be coated with Coal Tar Wrap which may contain asbestos or PCB's and so, may require special handling and disposal methods as specified in Con Edison - ASBESTOS MANAGEMENT MANUAL, CHAPTER 6 - ASBESTOS WORK PROCEDURES, SECTION 06.04 - COAL TAR WRAP REMOVAL. For under 25' (feet) in length and an approved NYC-DEP variance for over 25' (feet).

2. Determination Of Operating Status Of Gas Facilities:

The Contractor shall notify facility operator, as required by New York State Industrial Code 753. Gas Facilities shall not be removed without the approval of the facility operator whose authorized representative shall certify in writing (specific facility or area wide facilities certification) and in a timely manner acceptable to the Resident Engineer that abandoned facilities are free of combustible gas and any other environmental contaminants prior to removal. The Resident Engineer shall rely on the facility

operator's certification. The facility operator may request the excavation of test pits (See Section 6.07) for this determination ahead of City work and Contractor shall provide safe access, facilitate and permit facility operator to enter test pit excavations for the purpose of testing gas facilities. However, the facility operator may prefer to make this test during performance of City work in order to issue the above certification. This shall be permitted provided that it is agreed that additional costs, if any, resulting from this choice shall be a matter of adjustment between the Contractor and the facility operator only, and at no cost the City contract. Should such investigation result in the determination that the abandoned gas facilities do not contain Coal Tar Warp then the removal of said facilities shall be covered under separate item (See Section 6.03).

3. Requirements:

The Contractor shall excavate abandoned gas facility sufficiently, either in it's entirety, or at locations determined by Contractor to allow the removal of Coal Tar Wrap (if present on the abandoned gas facility) and to facilitate the safe extraction of manageable lengths of abandoned pipe without damage to adjacent facilities, utilities or city structures either parallel to or crossing above or below abandoned gas facility. The Contractor is to allow access to the designated cutting points within the Contractors trench by authorized Con Edison personnel who will remove the Coal Tar Wrap as per Con Edison and/or NYC-DEP approved procedures. This access shall conform to all applicable codes, rules & regulations. This work by Con Edison personnel shall be performed in a timely fashion and shall not unduly impede the Contractors progress and/or productivity. Upon completion of the coating removal, the Contractor shall be allowed to cut, burn or grind the gas facility and remove the section of abandoned pipe. Contractor shall designate a specific site to stockpile those removed pipes. The facility operator will be responsible to provide trucking and disposal services with its own personnel and shall remove the stockpiled pipes during off hours or during such time as agreed to by the Contractor. Since the pipe removed will remain the property of the facility operator and is to be disposed of by the facility operator, the facility operator shall be responsible for any required notifications, filings, dump charges and incidentals associated with the disposal of abandoned gas facilities found to contain Coal Tar Wrap.

4. Method Of Measurement:

Abandoned gas facility removal shall be measured for payment per linear foot of pipe and appurtenances removed.

5. Price To Cover:

The price shall cover all additional cost of supervision, labor, materials, equipment and insurance necessary to complete this work in accordance with the plans and specifications, including, but not limited to, excavation by hand around and under other City and facility operator owned properties and, where necessary, the support and protection of such properties. The cost shall also include hand excavation in the area(s) of proposed abandoned pipe cut(s), cutting and/or burning of abandoned gas pipes and stockpile of removed sections of abandoned pipe and associated maintenance of traffic, blocking and temporary fencing if required. The unit price shall also cover sealing open ends remaining in the excavation with concrete or end caps (end caps to be supplied by facility operator) and backfilling of the area where the abandoned pipeline has been removed with clean backfill material. This item does not include any type of extra excavation, backfilling, compaction, pavement removal and/or restoration (temporary and permanent) associated with abandoned pipe removal ("lost trench"), all of which are covered under separate Section 6.06. The price shall also include allowance for any loss of productivity by the Contractor due to required facility operator work to remove pipe coating and prepare pipe for cutting as well as any change in Contractor excavation method, additional trucking and/or stockpiling costs.

SECTION 6.04 - Adjust Hardware To Grade Using Spacer Rings/Adaptors. (Street Repaving.)

1. Description:

Under this section, the Contractor shall provide all labor, supervision, materials, equipment, insurance and incidentals required to adjust to final grade gas street surface hardware located within the contract area boundaries shown on the plans. The gas company operating in the area, (facility operator), owns these facilities. The work shall be performed in accordance with the contract plans, specifications and at the directions of the Resident Engineer in concurrence with authorized representative of the facility operator.

2. Materials:

The facility operator shall furnish and deliver all prefabricated hardware parts required. These include adaptors for the grade adjustment proper and new street hardware if existing ones are found to be defective, all in accordance with the facility operator standards and City rules and regulations. The Contractor shall notify the facility operator of the installation schedule at least three (3) business days before materials are required on the site. Should the facility operator fail to deliver the necessary material according to any schedule mutually agreed upon by the Contractor and facility operator, the City shall not be responsible for any delays attributable thereto, nor for the failure of delivery of such materials. On project where material storage is not permitted on site, the facility operator shall deliver the required material to the Contractor's yard and it shall be the Contractor's responsibility to transport the material to the work site when needed for installation. It shall also be the Contractor's responsibility to inspect the materials to be installed by him immediately upon delivery and advise the facility operator through its authorized representative, of all damaged materials. The Contractor at no additional expense to the City or the facility operator shall replace any material that is damaged or lost after the Contractor's inspection.

3. Method Of Measurement:

The Contractor shall be paid for each six (6) inch round box and/or nine (9) inch square box adjusted to grade regardless of adjustment height requirements.

4. Price To Cover:

The unit price bid for this item shall include all additional labor, supervision, insurance, equipment and, material (except those to be provided by the facility operator), required to adjust each box to grade as required in the contract plans and specifications. The bid price shall also include the removal of existing frames and covers from existing facilities to be salvaged and returned to the facility operator and, all material transportation from the Contractor's material storage yard to the work site. In addition the bid price shall include "chipping" around existing box using appropriate means and methods where grinding is required.

SECTION 6.05 - Adjust Hardware To Grade By Resetting. (Road Reconstruction.)

1. Description:

Under this item, the Contractor shall provide all labor, supervision, materials, equipment, insurance and incidentals required to adjust to the proposed grade gas street surface hardware located within the contract area boundaries shown on the plans. The gas company operating in the area, (facility operator), owns these facilities. The work shall consist of either building up or lowering or resetting the casting by removing the existing frame and cover building up or decreasing the existing installation, replacing the frame and/or cover if damaged or worn out, as determined by the Resident Engineer, with a new frame and/or cover furnished by the owner, and setting the frame and cover to new elevation. The work shall be performed in accordance with the contract plans, specifications and at the directions of the Resident Engineer.

2. Materials:

The facility operator shall furnish and deliver all new hardware parts required. The Contractor shall furnish materials such as mortar, bricks and concrete in compliance with contract requirements. At locations

where high-early strength concrete is required under this contract to be placed adjacent to gas facilities, then the requirement for concrete shall be high-early strength complying with the current New York State Department of Transportation, Standard Specifications for Class F concrete. Existing castings may be replaced as required and deemed necessary by the Engineer and by City rules and regulations. The Contractor shall install the new castings of various sizes furnished by the facility operator. The Contractor shall notify the facility operator of the installation schedule at least three (3) business days before materials are required on the site and, shall provide off-loading services to the facility operator. Should the facility operator fail to deliver the necessary material according to any schedule mutually agreed upon by the Contractor and facility operator, the City shall not be responsible for any delays attributable thereto, nor for the failure of delivery of such materials. Such delays shall be a matter of adjustment between the Contractor and the facility operator. On project where material storage is not permitted on site, the facility operator shall deliver the required material to the Contractor's yard and it shall be the Contractor's responsibility to transport the material to the work site when needed for installation. It shall also be the Contractor's responsibility to inspect the materials to be installed by him, immediately upon delivery and advise the facility operator through its authorized representative, of all damaged materials. The Contractor at no additional expense to the City or the facility operator shall replace any material that is damaged or lost after the Contractor's inspection.

3. Methods Of Construction:

The Contractor shall remove and reinstall existing castings or install new castings to the proposed grade. Setting and resetting the castings shall be done with mortar and brick according to the standards of the facility operator. Work shall be performed in a workmanlike manner. Castings that are deemed unacceptable for resetting shall remain the property of the facility operator and he shall be responsible for their removal and proper disposal from site. No traffic shall be allowed on adjusted street hardware until permitted by the Engineer.

4. Method Of Measurement:

The Contractor shall be paid for each gas hardware adjusted to grade regardless of size or adjustment height requirements (up or down).

5. Price To Cover:

The unit price bid for this item shall include all additional labor, supervision, insurance, equipment and, material (except those to be provided by the facility operator), required to adjust each gas hardware to grade as required in the contract plans and specifications. The bid price shall also include the removal of existing frames and covers from existing facilities; building up the existing installations with bricks and mortar, or lowering the existing installation by removing bricks and mortar; replacing damaged frames and/or covers with new frames and/or covers furnished by the facility operator; setting the frames and covers to the new elevations; protect existing installations; repair minor structural damages to existing installations prior to resetting frames; unloading of furnished castings at the Contractor's yard and transporting castings from the Contractor's yard to the job site as required; completing the work in accordance with the contract plans, specifications and, at the directions of the Engineer. In addition the bid price shall include "chipping" around existing gas facilities using appropriate means and methods where grinding is required.

SECTION 6.06 - Special Care Excavation And Backfilling.

1. Description:

Under this section, the Contractor shall provide all labor, materials, equipment, insurance and incidentals required to support and protect the integrity of live gas facilities including mains, services, related structures and appurtenances during excavations. The gas company operating in the area, (facility operator), owns these facilities. The work shall be performed in accordance with the contract plans, specifications and at the directions of the Resident Engineer in consultation with authorized

representatives of the facility operator.

2. Applicability Of Section:

This section shall apply to live gas facilities of various sizes located within two (2) feet of any face of unsheeted excavation, (unsheeted excavation refers to any excavation performed for city work and includes excavations performed that are to be subsequently sheeted using approved methods) and paralleling or, encroaching any face of excavation. Also, for crossings greater than forty-five (45) degrees and/or located at a cover depth greater than five (5) feet from existing street surface. Parallel facilities are not exposed at any time during excavation (See "Gas Cost Sharing Work Standard Sketch No. 5"). Encroaching facilities are partially exposed inside the limit of excavation (See "Gas Cost Sharing Work Standard Sketch No. 5"). This section shall also apply to gas facilities crossing catch basins excavation, and catch basins sewer connections (chutes) trench excavation only when extra depth (covered in other section), is not required for chutes installations because of such utilities interferences (See "Gas Cost Sharing Work Standard Sketch No. 3"). This section shall also apply to gas services (if shown or otherwise listed in contract documents) crossing unsheeted excavations for water mains, gas facilities crossing fire hydrant branch connections, house sewer and/or water service connections excavations. This section shall also apply for so called "loss trench", as described further, and for additional excavation (pavement and/or soil), backfilling, compaction, roadway base and pavement restoration due to abandoned gas facilities, only if removed by Contractor. If operating status of gas facilities cannot be determined prior to excavation then such facilities shall be considered live and this section shall fully apply. The excavation around fully exposed live gas facilities along and within limits of excavation (not crossings) shall be covered by this section also (not shown on "Gas Cost Sharing Work Standard Sketch No. 5"), however the support requirement, if any is required, of such facilities is beyond the scope of these specifications and therefore shall be the responsibility of facility operator to determine and prescribe, at no cost to the City contract, but shall be a matter of adjustment between the Contractor and facility operator.

3. Payment Restriction:

No special care excavation shall be paid for abandoned gas facilities paralleling and/or encroaching excavation and therefore are not in direct interference with City work. Except as allowed in this section, the bid item specified under this section shall not be used in combination with items covered under other sections for work done due to a particular gas facility. This item shall not be paid for new gas facilities when trenching for such new facilities has been performed by the Contractor of record in common with trench excavation for City Work (overlapping trench limits). The cost of excavating with care as defined in this section shall be deemed included in the cost of trench excavation for the new gas facilities. This restriction shall apply even if such gas common trench excavation is not part of the contract. If facilities are in direct interference with City work, meaning that "Minimum Clearances" described in "General Provisions; Gas Cost Sharing Work Paragraph No. 8" cannot be maintained and excavation has to be temporarily or permanently abandoned then this particular location shall become a test pit and dealt with as specified in Section 6.07 and "General Provisions; Gas Cost Sharing Work Paragraphs Nos. 2 and 8".

4. Method Of Construction:

All excavation in the vicinity of gas facilities shall be as required by NYS Industrial Code 753. Where these facilities are paralleling and located two (2) feet or less from the limits of the proposed excavation, the Contractor shall use hand excavation methods (pick and shovel or hand held power tools) to ascertain the clearances of these facilities with respect to the proposed excavation. Once the location of these facilities with respect to the proposed excavation is verified to the satisfaction of the Resident Engineer, the Contractor shall then proceed with a combination of hand and machine excavation as required preserving the integrity of the facilities. The installation of timber supports or underpinning, when soil foundation cannot fully support partially exposed pipes, may be required to prevent pipe movement as directed by the Resident Engineer.

5. Method Of Payment:

The unit price for this work item shall be based on cubic yard (CY) of average excavation with care and, is

to be considered as an incremental cost for performing City work with gas facilities interferences.

6. Method Of Measurement:

A. For Paralleling Facilities: Volume calculated as: Depth as measured from existing street surface to the bottom of unsheeted trench excavation allowable by OSHA regulations, multiplied by, the width measured as one (1) foot from the face of excavation toward the center of excavation, multiplied by the length of parallel facility, divided by twenty-seven (27) cubic feet per cubic yard (See "Gas Cost Sharing Work Standard Sketch No. 5"). The gas facility is no longer considered to be in interference once sheeting has been installed, therefore no further compensation for paralleling facilities as described above will be made.

B. For Encroaching Facilities: Volume calculated as: Depth of trench as allowable by OSHA, maximum up to five (5) feet multiplied by, the width of partially exposed pipe plus one (1) foot, multiplied by the length of facility encroachment, divided by twenty-seven (27) cubic feet per cubic yard (See "Gas Cost Sharing Work Standard Sketch No. 5").

C. Fully Exposed Gas Facilities: (Not shown on "Gas Cost Sharing Work Standard Sketch No. 5") along and inside trench and/or crossing trench at an angle greater than forty-five (45) degrees and/or a cover depth greater than five (5) feet from the existing street surface. The volume shall be measured as the depth of trench excavation multiplied by the distance measured along the sheeting line between two (2) points of intersections of the gas facilities and the sides of trench excavation, multiplied by the width of trench excavation.

D. For Additional Excavation And Restoration Due To So Called "Loss Trench", When The Integrity Of Pavement And Soil Above And Around Existing Live Gas Facilities Cannot Be Maintained Due To Its Lack Of Cohesiveness: Volume shall be calculated as: Depth of unsheeted trench excavation multiplied by width measured as distance of facility from closest edge of unsheeted excavation plus, width of facility proper plus, one (1) foot or a maximum width of three (3) feet multiplied by length of facility fully exposed divided by, twenty-seven (27) cubic feet per cubic yard (not shown on "Gas Cost Sharing Work Standard Sketch No. 5").

E. For Facilities Crossing Excavation For Catch Basins, Or Chutes Installations (When NYCDEP Funded) Or Fire Hydrant Branch Connections, Or Unsheeted Water Main Trench, Or House Sewer And/Or Water Services: Volume calculated as: Depth as measured from existing street surface to the bottom of the trench excavation multiplied by, the width taken as the outside diameter of pipe or the width of structure plus one (1) foot on either side (two (2) feet), multiplied by, the length of exposed facility crossing the trench, divided by twenty-seven (27) cubic feet per cubic yard (not shown on "Gas Cost Sharing Work Standard Sketch No. 5").

Overlapping volume dimensions measured as described above may occur when multiple facilities are paralleling excavations, encroaching excavations or crossing catch basins and catch basin chute installations. In such cases, all such facilities shall be counted as one limited by the extreme pipes, faces (See "Gas Cost Sharing Work Standard Sketch No. 2"). The volume shall then be calculated as described above.

7. Price To Cover:

The bid price shall also cover all additional supervision, labor, material, equipment and insurance necessary to excavate while protecting and maintaining (excluding supports for fully exposed live gas) gas facilities without disruption of service to the public and in accordance with contract specifications. The price shall also include, changes of sheeting method and excavation width configuration where necessary to accommodate gas facilities in their existing locations; difficulties during the installation of catch basins, chute connections, hydrant branch, and house sewer and water connections under or over gas facilities; loss of productivity due to slower rate of excavation (special care) during excavation, including the use of such methods as: hand excavation around existing single and multiple facilities, extra excavation and backfilling due to lost trench because of existing and adjacent gas facilities, compaction, removal of

sheeting from the facilities, extra roadway base restoration and temporary pavement, associated maintenance and protection of traffic, barricades, and traffic plates that may be required to temporarily close and/or complete the work.

SECTION 6.07 - Test Pits For Gas Facilities.

1. Description:

Under this section, the Contractor shall furnish all labor, materials, insurance, equipment and appliances necessary to excavate, sheet and, maintain test pits at locations approved by the Resident Engineer in consultation with the facility operator. Test pits shall be dug in order to ascertain exact locations, cover and invert elevations, clearances, alignment and operating status (live or dead) of existing gas facilities. The Contractor shall inspect jointly with the Resident Engineer and facility operator, gas facilities and other structures uncovered, take all relevant measurements and elevations as directed by the Resident Engineer. Tests to determine operating status of gas facilities shall be performed by facility operator. The pits shall be covered with steel plates during daytime nonworking hours, and uncovered, as required, until the inspection work is completed. Testing of gas facilities may require a maximum of four (4) hours. Then, the pits shall be backfilled with clean fill, and resurfaced with temporary pavement. All traffic shall be maintained and all safety measures as stipulated shall be complied with.

2. Methods Of Construction:

A. Excavation: Existing pavement to be removed shall be neatly cut along lines of removal with a saw or other approved equipment which leaves a neat straight joint line along the juncture with subsequently replaced pavement. Excavation in the vicinity of utilities and other structures shall be performed using hand tools. Use of hand operated pneumatic and electric jackhammers will be permitted only for breaking pavement and removal of masonry, concrete and boulders, or as otherwise directed by the Resident Engineer. The Contractor shall properly dispose of all materials excavated from test pits away from site. Test pits shall be excavated at locations shown on the contract drawings or as directed by the Resident Engineer. Additional test pits may be required and shall be excavated where required, as ordered by the Resident Engineer. All test pits shall be excavated to a depth and size necessary to locate the existing facilities. Sheeting shall be used when depth of excavation exceeds five (5) feet. The sheeting required shall be furnished and installed in full compliance with the State of New York and Federal Safety Codes requirements and as specified in contract, whichever is more stringent. Care shall be taken that no existing gas facilities or other structures are broken or damaged. All broken or damaged facilities shall be reported immediately to facility operator who shall decide whether such facilities shall be repaired or replaced by company forces or by City contractor and in conformance with "General Provisions; Gas Cost Sharing Work Paragraph No. 9". Contractor shall excavate all material encountered, including large masses of concrete, cemented masonry and boulders, as directed by the Resident Engineer. Any type of excavation protection used, shall satisfy the following:

   (a) Industrial Code Rule 753.
   (b) Prevent injury to workers and the public, and avoid damage to existing water, sewer, and gas pipes or other structures, and to pavements and their foundations, through caving or sliding of the banks of the excavation.

   Should it become necessary, as determined by the Resident Engineer, to enlarge any test pit in any dimension after sheeting has been placed, the Contractor shall remove portions of the sheeting, as necessary, enlarge the test pits as directed, and replace the sheeting without additional compensation for this work other than for the additional volume of material excavated.

B. Maintenance Of Test Pits: Excavated test pits shall be maintained free of debris and kept dry by the Contractor in order to permit the inspection and measurements and to determine the locations of facilities. In order to accomplish this, Contractor shall, upon completion of excavation and placement of sheeting (if depth greater than five (5) feet), furnish and install adequate steel plates and posting

over the excavated pits and shall temporarily remove all equipment debris and workers, and relocate barricades in order to open the full width of street to traffic during nonworking hours. The Contractor shall then, at no additional cost, relocate such barricades, barrels, cones and other warning devices and remove steel plates, as and when directed by the Resident Engineer to facilitate the inspection of exposed facilities. When work is being performed and the pits are not covered with steel plates, the Contractor shall provide complete and safe access to the test pits as may be required, and he shall provide construction barricades and maintain traffic at all times as shown or as directed by the Resident Engineer. Upon completion of test pit inspection by the Resident Engineer, the pit shall be backfilled by the Contractor as specified in contract, except that backfill material shall conform to contract specifications for such purpose.

C. Pavement And Sidewalk Restoration: After backfilling is completed, the Contractor shall construct a temporary pavement consisting of a minimum of four (4) inches thick asphaltic concrete mixture in roadway areas or a two (2) inches thick asphaltic concrete mixture in sidewalk areas in order to maintain existing pedestrian and vehicular traffic. This temporary pavement shall be maintained until permanent pavement and sidewalk replacement is constructed as specified in contract.

3. Measurements:

The quantity to be measured for payment shall be the number of cubic yards of material removed from within the limits of the pit dimensions as directed by the Resident Engineer. The volume occupied by existing pipes or other structures remaining within the maximum payment lines will not be deducted from the total volume measured except, where the cross sectional area of these facilities exceeds four (4) square feet. As determined by the Resident Engineer, the quantity measured for payment may be proportionate to a fair and reasonable estimate of gas responsibility in the total volume excavated.

4. Price To Cover:

The contract price bid per cubic yard for test pits shall cover all additional costs of labor, material, insurance, equipment, appliances and incidentals required to excavate test pits, including removal and disposal of excavated materials, sheeting, steel plating, backfill, compaction and temporary pavement and sidewalk restoration all in accordance with the specifications and as directed by the Resident Engineer. The price shall also include the cost of providing safe access to the excavation by facility operator for the performance of certain test to determine operating status of gas facilities prior to City work. The price shall also include support and protection of all gas facilities crossing excavation, paralleling and/or encroaching any face of excavation.

SECTION 6.09 - Trench Excavation and Backfill for New Gas Mains and Services (For National Grid Work Only)

1. Description:

Under this section, the contractor shall furnish all labor, materials, equipment, insurance, permits and incidentals required to break/remove roadway and sidewalk pavement, excavate, backfill and restore gas trenches. The trench to be excavated shall be determined by the size of the gas facility to be installed. The work shall be performed in accordance with applicable specifications, and/or at the direction of the Resident Engineer in consultation with the facility operator.

2. Materials:

All materials used to excavate and prepare trenches shall be supplied by the Contractor and be approved by the facility operator in consultation with the Resident Engineer.

3. Method of Construction:

Excavation – The Contractor shall saw cut and/or break and remove existing roadway which may include

but is not limited to, asphalt, concrete and cobblestone, utilizing approved equipment that leaves a neat straight joint line along the juncture with subsequently replaced pavement. Prior to starting the trenching operation, the contractor shall excavate the appropriate gas main tie-in pits at the extremities of the gas main sections to be replaced. Test pits shall be excavated to determine exact location of all tie-in pits and at appropriate intervals along proposed trench excavation to verify lane and clearances as shown on the contract plans. The tie-in pits shall be adequately protected by the contractor using wood fencing or steel traffic plates until such time when the facility operator has completed the tie-in work. The Contractor shall be permitted to excavate utilizing a combination of machine and hand excavation, as field conditions warrant, and as directed by the facility operator. The trench shall be adjusted so as to provide for a nominal cover on the new gas facilities or as required based on field conditions, applicable specifications, or as directed by the facility operator in consultation with the Resident Engineer. The width of the trench shall be as directed by the facility operator in consultation of the Resident Engineer. The bottom of the trench shall be graded smooth with a minimum cushion of 3 inches of clean sand and in conformance with applicable specification and be compacted, to minimize initial settlement and to avoid "point" support of new gas facilities. All stones projecting into the trench bottom shall be removed, and the voids backfilled before the new gas facilities are installed. Where streets are not to final grade, the cover shall be measured from the final grade, or the existing grade, whichever provides the deeper trench. Excavation in the vicinity of utilities and other structures shall be performed using hand tools. The contractor shall properly dispose of all materials excavated away from site. Size and location of excavation shall be as directed by the facility operator in consultation with the Resident Engineer. Trenches shall be excavated to a depth and size necessary to facilitate the installation of the new gas facility and in conformance with the applicable specification. All existing facilities that are encountered during trench excavating shall be protected in a manner suitable to the facility operator in consultation with the Resident Engineer. Tight sheeting shall be used, as required, based on field conditions and/or when the depth of excavation is equal to or greater than five feet. Skeleton type sheeting will not be permitted. The sheeting required shall be furnished and installed in full compliance with the State of New York and Federal Safety Code requirements and in compliance with applicable specifications and/or as directed by the facility operator in consultation with the Resident Engineer. Care shall be taken that no existing gas facilities or other structures are broken or damaged. Contractor shall excavate all material encountered necessary to facilitate the installation of the new gas facilities, and as directed by the facility operator. Care should be taken to avoid damage to existing utility facilities and structures, and to pavements and their foundations, and to avoid caving or sliding banks within the excavation.

Maintenance of Trench Excavation - Excavated trenches shall be maintained free of debris and kept dry by the contractor. In order to accomplish this, contractor shall, upon completion of excavation and placement of sheeting (as required and/or if depth is equal to or greater than five feet), furnish and install adequate steel plates, as directed by the facility operator in consultation with the Resident Engineer, and posting over the excavated trenches and shall temporarily remove all equipment debris and workers, and relocate barricades in order to open the full width of street to traffic during non-working hours, as required based on DOT requirements. National Grid forces will perform all live gas main connections, dead gas main cut-outs, and/or service work associated with disconnecting and reconnecting from old to new gas main The Contractor shall then, at no additional cost, relocate such barricades barrels, cones and other warning devices and remove steel plates, as and when directed by the facility operator in consultation with the Resident Engineer to facilitate the installation of the new gas facilities. When work is being performed and the excavations are not covered with steel plates, the Contractor shall provide complete and safe access to the trench as may be required, and shall provide construction barricades and maintain traffic at all times as shown or as directed by the facility operator in consultation with the Resident Engineer. The contractor has the responsibility to maintain and set to grade all National Grid hardware during backfill and pavement restoration. Upon completion of installation of the new gas facility, the trench excavation shall be backfilled by the contractor in accordance with Contract requirements and all backfill material shall conform to contract specifications for such purpose.

Pavement and Sidewalk Restoration - After backfilling is completed, the contractor shall install temporary pavement consisting of six inches (6") thick asphaltic concrete mixture in roadway areas or a two inches (2") thick asphaltic concrete mixture in sidewalk areas in order to maintain existing pedestrian and vehicular traffic. This temporary pavement shall be maintained until permanent replacement as specified in contract. Permanent pavement restoration shall be as required by the appropriate contract

specifications and as directed by the Resident Engineer.

4. Method of Measurement:

The quantity to be measured for payment shall be the number of cubic yards (C.Y.) of trench actually excavated, including roadway pavement, base and/or sidewalk concrete removed within the limits of the trench as directed by the Resident Engineer in consultation with the facility operator. The volume occupied by existing pipes or other structures will be deducted from the total volume measured as encountered based on existing field conditions.

5. Price to Cover:

The unit price bid per cubic yard for excavation shall include the cost of all supervision, labor, material, equipment, insurance and incidentals necessary to complete excavation trenches, including backfill, compaction testing and restoration of trenches and tie-ins pits as specified or shown on the contract, plans. The bid price shall also include the cost of coordinating the sewer and water main work to be performed by the contractor with the gas installation work to be performed by others. The price shall also include, associated maintenance of traffic, and traffic plates and openings and closings of plates as may be required in order to provide access to the facility operator during the new gas facility installation, and installing, removing and maintaining tight sheeting that may be required, cut, break and remove various thickness of surface and base pavement, excavate by hand, furnish, place and compact, in compliance with DOT requirements, clean sand backfill following installation of the gas facility. Any required removing, trucking, storing, and disposing of material shall be deemed included in the unit price. The price shall also include the cost of providing temporary pavement restoration. Permanent pavement restoration shall be deemed included in this item, as required and as directed by the Resident Engineer.

SECTION 6.09a Trench Excavation and Backfill for New Gas Mains and Services (For Con Edison Work Only)

1. Description:

Under this section, the contractor shall furnish all labor, materials, equipment, insurance, permits and incidentals required to break/remove roadway and sidewalk pavement, excavate, backfill and restore gas trenches. The trench to be excavated shall be determined by the size of the gas facility to be installed. The work shall be performed in accordance with applicable specifications, and/or at the direction of the Resident Engineer in consultation with the facility operator.

2. Materials:

All materials used to excavate and prepare trenches shall be supplied by the Contractor and be approved by the facility operator in consultation with the Resident Engineer. Clean sand backfill material shall be used and shall conform to Con Edison specification EO-1181-rev.6, General Specification for Backfilling of Trench and Small Openings.

3. Method of Construction:

Excavation – The Contractor shall saw cut and/or break and remove existing roadway which may include but is not limited to, asphalt, concrete and cobblestone, utilizing approved equipment that leaves a neat straight joint line along the juncture with subsequently replaced pavement. Prior to starting the trenching operation, the contractor shall excavate the appropriate gas main tie-in pits at the extremities of the gas main sections to be replaced. Test pits shall be excavated to determine exact location of all tie-in pits and at appropriate intervals along proposed trench excavation to verify lane and clearances as shown on the contract plans. The tie-in pits shall be adequately protected by the contractor using wood fencing or steel traffic plates until such time when the facility operator has completed the tie-in work. The Contractor shall be permitted to excavate utilizing a combination of machine and hand excavation, as field conditions warrant, and as directed by the facility operator. The trench shall be adjusted so as to provide for a nominal cover on the new gas facilities or as required based on field conditions, applicable specifications,

or as directed by the facility operator in consultation with the Resident Engineer. The width of the trench shall be as directed by the facility operator in consultation of the Resident Engineer. The width and depth of the trench shall conform to Con Edison Gas Operations drawing 309495 rev. 4, Trench Excavation for Gas Mains Up to 350 PSIG, or as directed by the facility operator in consultation of the Resident Engineer. The bottom of the trench shall be graded smooth with a minimum cushion of 3 inches of clean sand and in conformance with applicable specification and be compacted, to minimize initial settlement and to avoid "point" support of new gas facilities. All stones projecting into the trench bottom shall be removed, and the voids backfilled before the new gas facilities are installed. Where streets are not to final grade, the cover shall be measured from the final grade, or the existing grade, whichever provides the deeper trench. Excavation in the vicinity of utilities and other structures shall be performed using hand tools. The contractor shall properly dispose of all materials excavated away from site. Size and location of excavation shall be as directed by the facility operator in consultation with the Resident Engineer. Trenches shall be excavated to a depth and size necessary to facilitate the installation of the new gas facility and in conformance with the applicable specification. All existing facilities that are encountered during trench excavating shall be protected in a manner suitable to the facility operator in consultation with the Resident Engineer. Tight sheeting shall be used, as required, based on field conditions and/or when the depth of excavation is equal to or greater than five feet. Skeleton type sheeting will not be permitted. The sheeting required shall be furnished and installed in full compliance with the State of New York and Federal Safety Code requirements and in compliance with applicable specifications and/or as directed by the facility operator in consultation with the Resident Engineer. Care shall be taken that no existing gas facilities or other structures are broken or damaged. Contractor shall excavate all material encountered necessary to facilitate the installation of the new gas facilities, and as directed by the facility operator. Care should be taken to avoid damage to existing utility facilities and structures, and to pavements and their foundations, and to avoid caving or sliding banks within the excavation.

Maintenance of Trench Excavation - Excavated trenches shall be maintained free of debris and kept dry by the contractor. In order to accomplish this, contractor shall, upon completion of excavation and placement of sheeting (as required and/or if depth is equal to or greater than five feet), furnish and install adequate steel plates, as directed by the facility operator in consultation with the Resident Engineer, and posting over the excavated trenches and shall temporarily remove all equipment debris and workers, and relocate barricades in order to open the full width of street to traffic during non-working hours, as required based on DOT requirements. Con Edison forces will perform all live gas main connections, dead gas main cut-outs, and/or service work associated with disconnecting and reconnecting from old to new gas main The Contractor shall then, at no additional cost, relocate such barricades barrels, cones and other warning devices and remove steel plates, as and when directed by the facility operator in consultation with the Resident Engineer to facilitate the installation of the new gas facilities. When work is being performed and the excavations are not covered with steel plates, the Contractor shall provide complete and safe access to the trench as may be required, and shall provide construction barricades and maintain traffic at all times as shown or as directed by the facility operator in consultation with the Resident Engineer. The contractor has the responsibility to maintain and set to grade all Con Edison hardware during backfill and pavement restoration. Upon completion of installation of the new gas facility, the trench excavation shall be backfilled by the contractor in accordance with Contract requirements and all backfill material shall conform to contract specifications for such purpose.

Pavement and Sidewalk Restoration - After backfilling is completed, the contractor shall install temporary pavement consisting of six inches (6") thick asphaltic concrete mixture in roadway areas or a two inches (2") thick asphaltic concrete mixture in sidewalk areas in order to maintain existing pedestrian and vehicular traffic. This temporary pavement shall be maintained until permanent replacement as specified in contract. Permanent pavement restoration shall be as required by the appropriate contract specifications and as directed by the Resident Engineer.

4. Method of Measurement:

The quantity to be measured for payment shall be the number of cubic yards (C.Y.) of trench actually excavated, including roadway pavement, base and/or sidewalk concrete removed within the limits of the trench as directed by the Resident Engineer in consultation with the facility operator The volume occupied by existing pipes or other structures will be deducted from the total volume measured as encountered

based on existing field conditions.

5. Price to Cover:

The unit price bid per cubic yard for excavation shall include the cost of all supervision, labor, material, equipment, insurance and incidentals necessary to complete excavation trenches, including backfill, compaction testing and restoration of trenches and tie-ins pits as specified or shown on the contract, plans. The bid price shall also include the cost of coordinating the sewer and water main work to be performed by the contractor with the gas installation work to be performed by others. The price shall also include, associated maintenance of traffic, and traffic plates and openings and closings of plates as may be required in order to provide access to the facility operator during the new gas facility installation, and installing, removing and maintaining tight sheeting that may be required, cut, break and remove various thickness of surface and base pavement, excavate by hand, furnish, place and compact, in compliance with DOT requirements, clean sand backfill following installation of the gas facility. Any required removing, trucking, storing, and disposing of material shall be deemed included in the unit price. The price shall also include the cost of providing temporary pavement restoration. Permanent pavement restoration shall be deemed included in this item, as required and as directed by the Resident Engineer.

GAS COST SHARING STANDARD SPECIFICATIONS
SCHEDULE GCS-A

Average rate charged by utility companies to Disconnect and Reconnect Gas Services:

1. National Grid - $586.90 per Service/and Visit
2. Con Edison - $524.00 per Service/and Visit

IV - STANDARD SKETCHES; GAS COST SHARING WORK

Hereinafter attached are the following Standard Sketches for Gas Cost Sharing Work:

Sketch No. 1 - Support Requirements For Gas Mains And Services Crossing Excavation Greater Than 4' - 0" Wide At Any Angle

Sketch No. 1A - Support Requirements For Gas Mains Over 16" Diameter Up To And Including 48" Diameter Crossing Excavation At Any Angle

Sketch No. 2 - Typical Methods Of Measurement For Gas Crossings

Sketch No. 3 - Utility Crossings During Catch Basin Chute Connection Pipe Installation

Sketch No. 4 - Utility Crossings During Catch Basin Chute Connection Pipe Installation (Extra Depth)

Sketch No. 5 - Gas Main Encroachment On And/Or Parallel To Excavation Of Unsheeted Trench

GAS COST SHARING WORK (SKETCH NO. 1)

SUPPORT REQUIREMENTS FOR GAS MAINS AND SERVICES CROSSING EXCAVATION GREATER THAN 4'-0" WIDE AT ANY ANGLE

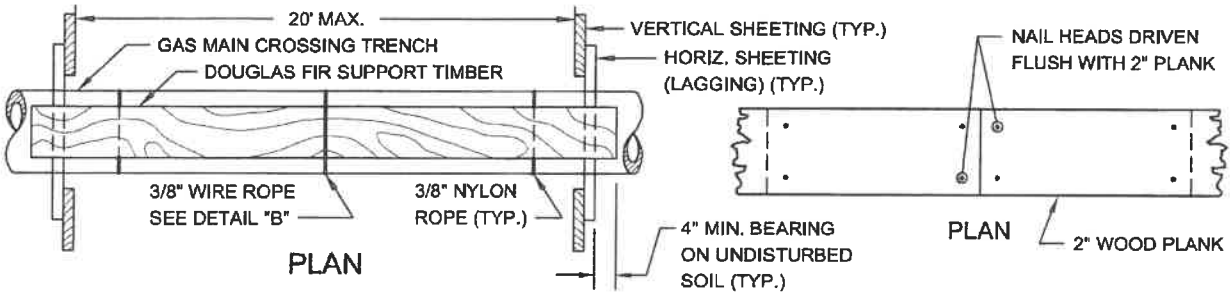

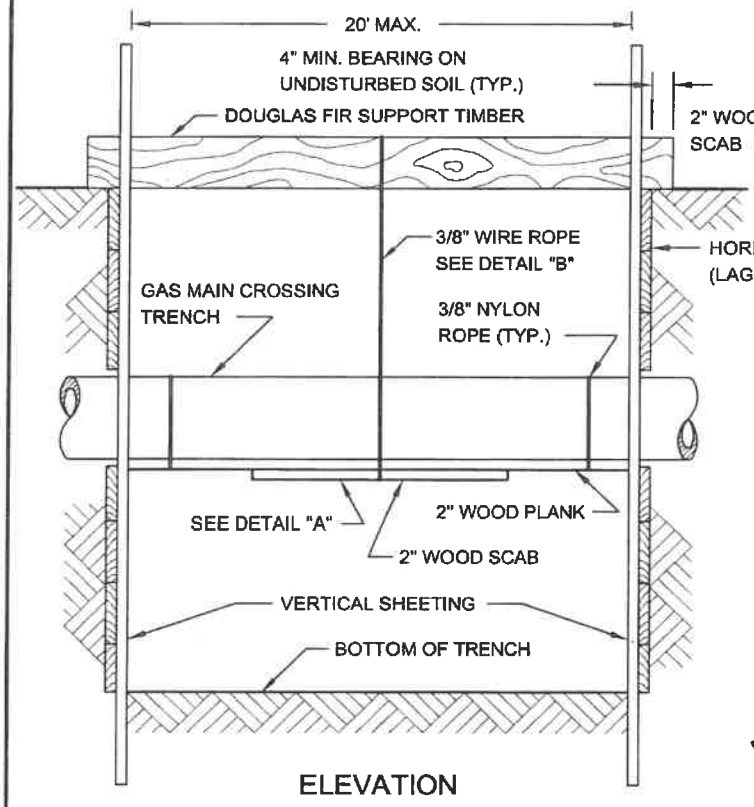

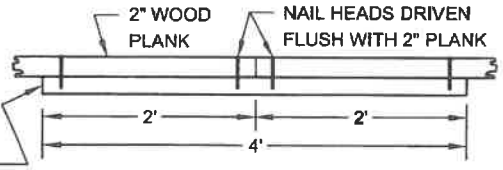

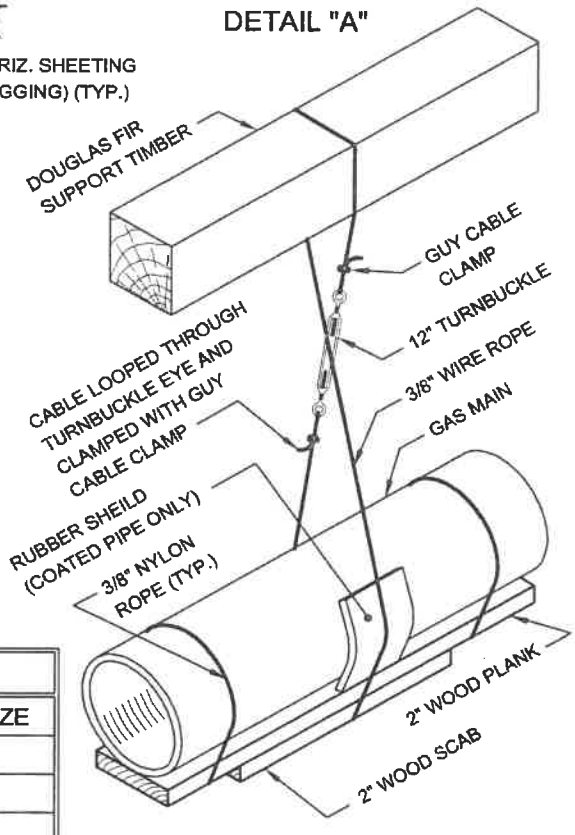

CABLE SUPPORT		TIMBER SUPPORT	
MAIN TYPE	SPACING	MAIN SIZE	TIMBER SIZE
CAST IRON	4' O.C. MAX.	UP TO 6"	6" X 6"
STEEL	10' O.C. MAX.	8" TO 10"	8" X 8"
PLASTIC	10' O.C. MAX.	12" TO 16"	10" X 10"

REVISED OCT. 2004 - L. ADRIEN
REVISED JUNE 1998 - J. WONG / W. PATALANOP. MOY

GAS COST SHARING WORK (SKETCH NO. 1A)

SUPPORT REQUIREMENTS FOR GAS MAINS OVER 16" DIAMETER UP TO AND INCLUDING 48" DIAMETER CROSSING EXCAVATION AT ANY ANGLE

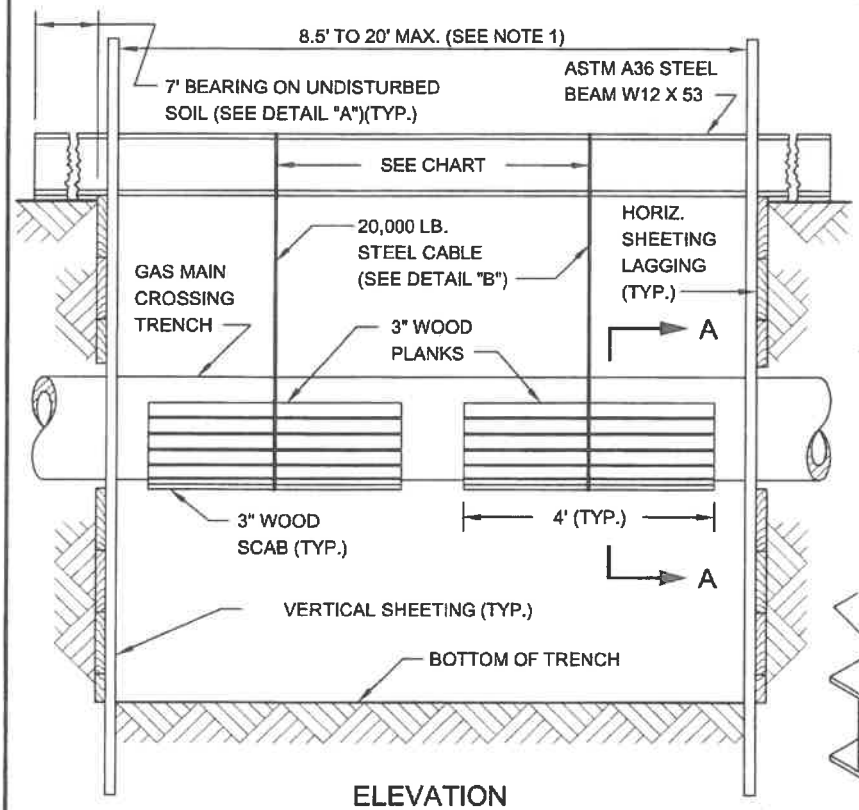

ELEVATION

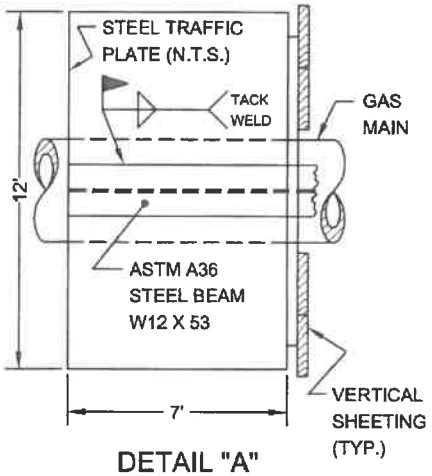

DETAIL "A"

CABLE SUPPORT	
MAIN TYPE	SPACING
CAST IRON	4' O.C. MAX.
STEEL	10' O.C. MAX.

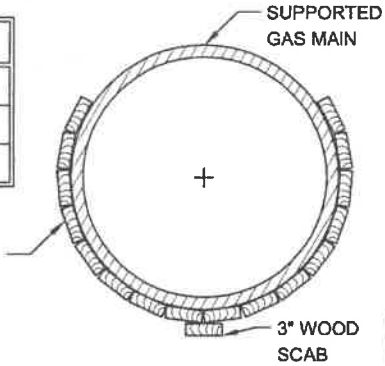

SECTION A-A

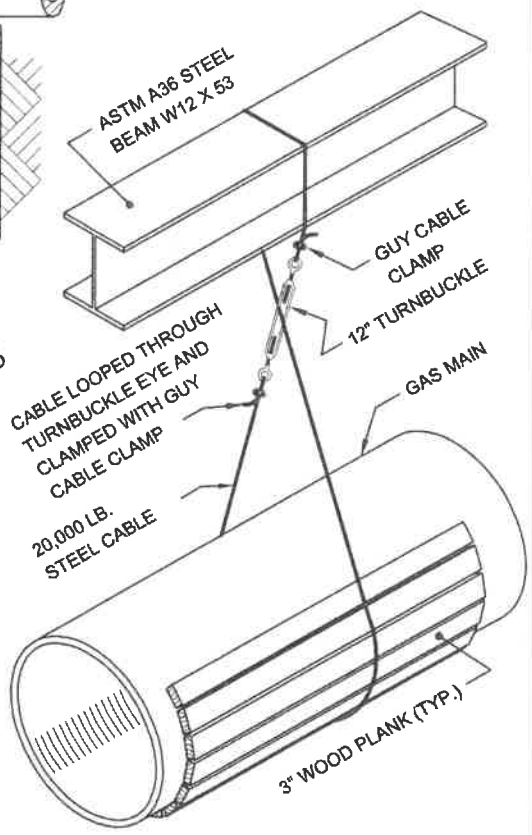

DETAIL "B"

NOTES:

(1) NO SUPPORT IS REQUIRED FOR GAS MAINS OVER 16" DIA. UP TO AND INCLUDING 48" DIA. CROSSING TRENCHES LESS THAN 8.5' WIDE.

(2) UNDERMINE A MAXIMUM OF 8.5 L.F. OF CAST IRON GAS MAIN AT A TIME.

(3) SET STEEL CABLE OVER 3" WOOD PROTECTIVE PLANKS AND PLACE AN ADDITIONAL 3" SCAB ON THE BOTTOM OF THE GAS MAIN.

(4) ADJUST STEEL CABLE UNTIL DEAD WEIGHT OF THE UNDERMINED GAS MAIN HAS BEEN TAKEN UP BY THE OVERHEAD STEEL BEAM SUPPORT.

(5) ALL SUPPORTS AND STEEL CABLES CAN BE REOMVED ONLY AFTER THE REQUIRED BACKFILL (AROUND AND BELOW GAS MAIN) HAS BEEN COMPACTED IN ACCORDANCE WITH NEW YORK CITY STANDARDS AND AT THE DIRECTIONS OF THE ENGINEER.

REVISED OCT. 2004 - I. ADRIEN
REVISED JUNE 1999 - J. WONG / W. PATALANO/P. MOY

GAS COST SHARING WORK (SKETCH NO. 2)

TYPICAL METHODS OF MEASUREMENT FOR GAS CROSSINGS

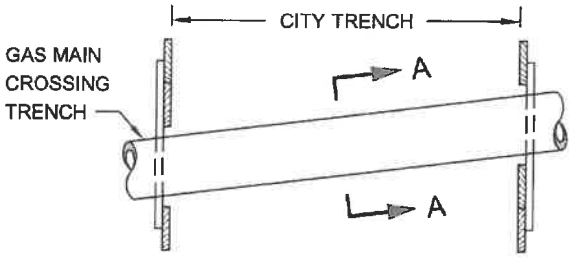

SINGLE FACILITY CROSSING

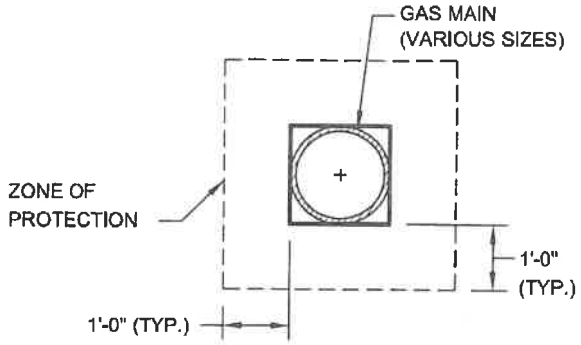

SECTION A-A

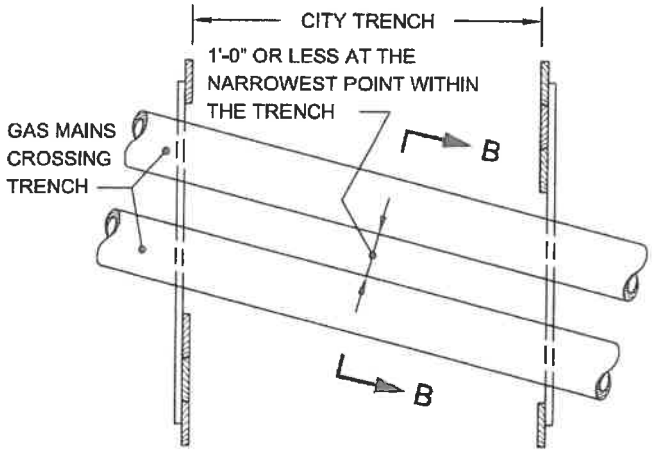

MULTIPLE FACILITIES
(GAS MAINS AT SAME ELEVATION)

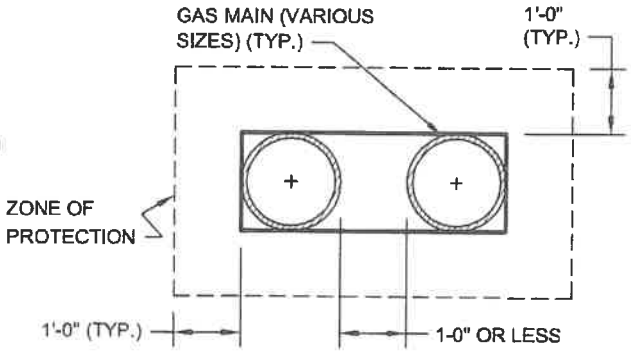

SECTION B-B

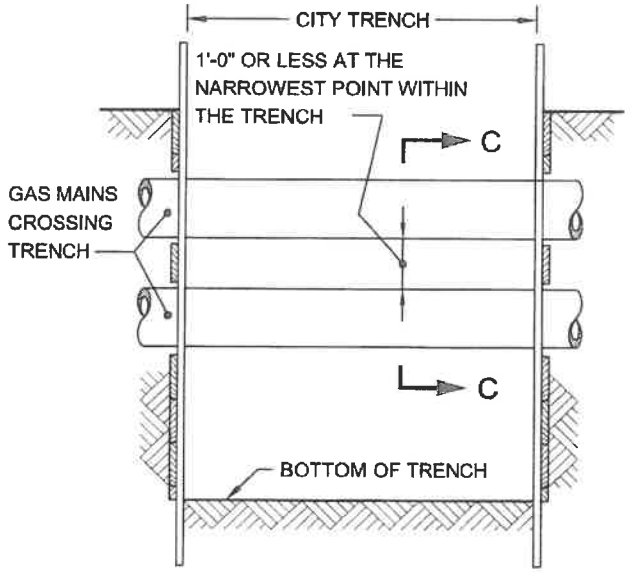

MULTIPLE FACILITIES
(ONE CROSSING AT DIFFERENT ELEVATIONS)

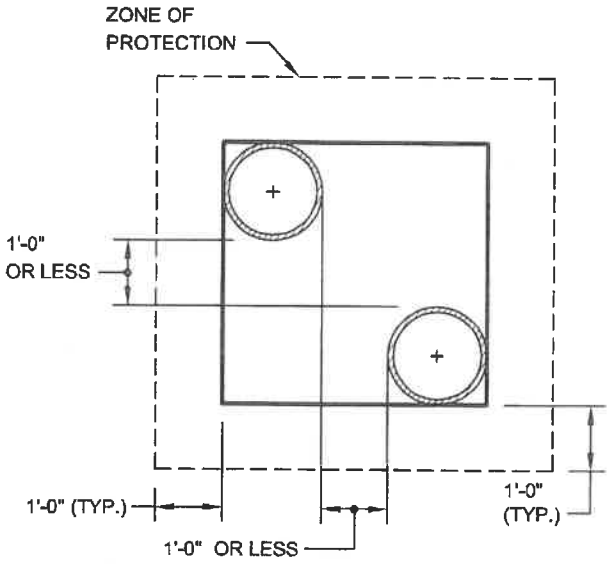

SECTION C-C

NOTE:

GAS MAINS MAY OR MAY NOT BE PARALLEL TO EACH OTHER.

REVISED SEPT. 2004 - L. ADRIEN
REVISED SEPT. 2004 - J. WONG/M. PATALANO/P. MOY

GAS COST SHARING WORK (SKETCH NO. 3)

UTILITY CROSSINGS DURING CATCH BASIN CHUTE CONNECTION PIPE INSTALLATION

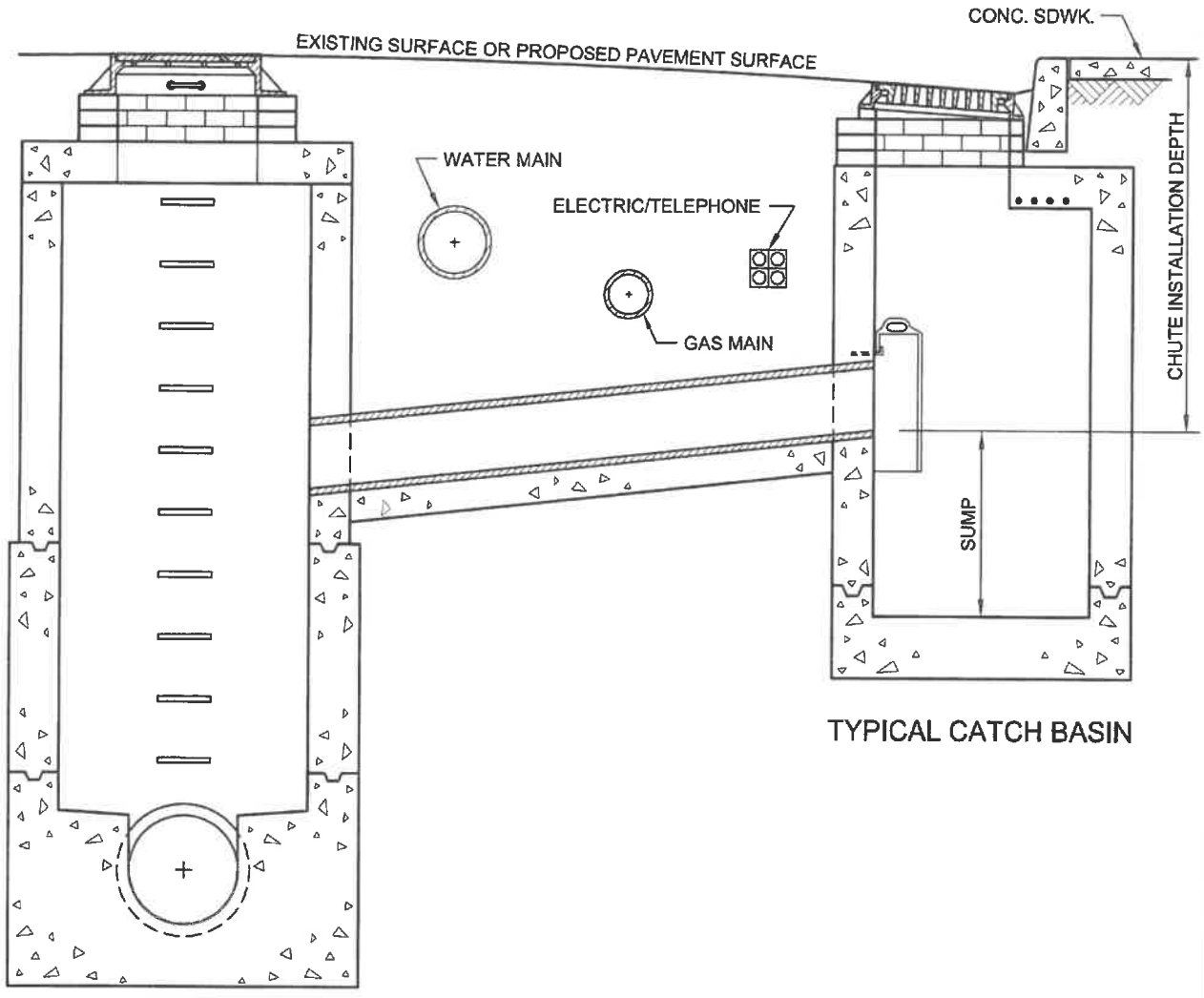

TYPICAL CATCH BASIN

TYPICAL SEWER MANHOLE

REVISED OCT. 2004 - L. ADRIEN
REVISED OCT. 1998 - J. WONG/W. PATALANO/P. MOY

GAS COST SHARING WORK (SKETCH NO. 4)

UTILITY CROSSINGS DURING CATCH BASIN CHUTE CONNECTION PIPE INSTALLATION (EXTRA DEPTH)

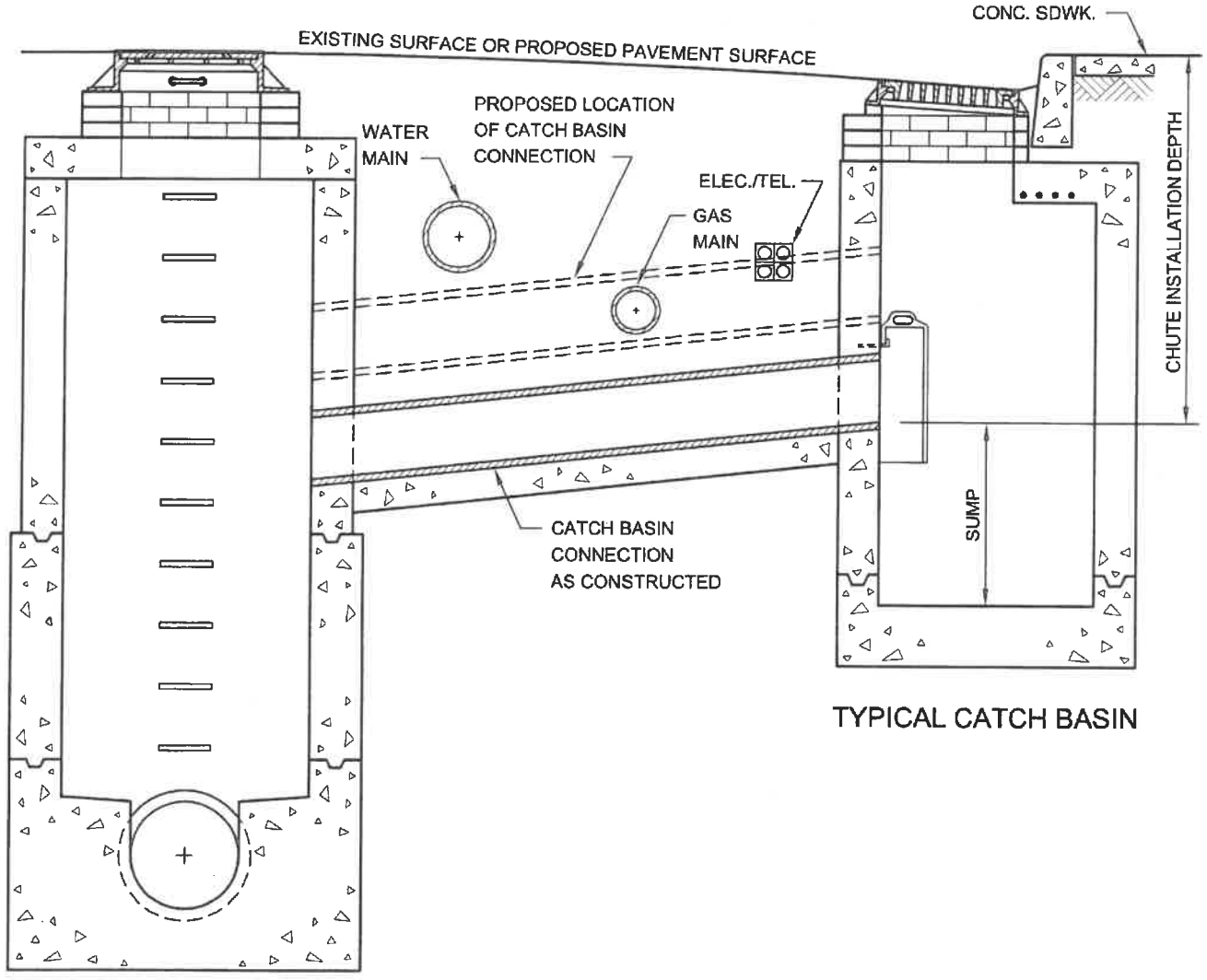

TYPICAL CATCH BASIN

TYPICAL SEWER MANHOLE

REVISED OCT. 2004 - I. ADRIEN
REVISED OCT. 1998 - J. WONG/W. PATALANO/P. MOY

GAS COST SHARING WORK (SKETCH NO. 5)

GAS MAIN ENCROACHMENT ON AND/OR PARALLEL TO EXCAVATION OF UNSHEETED TRENCH

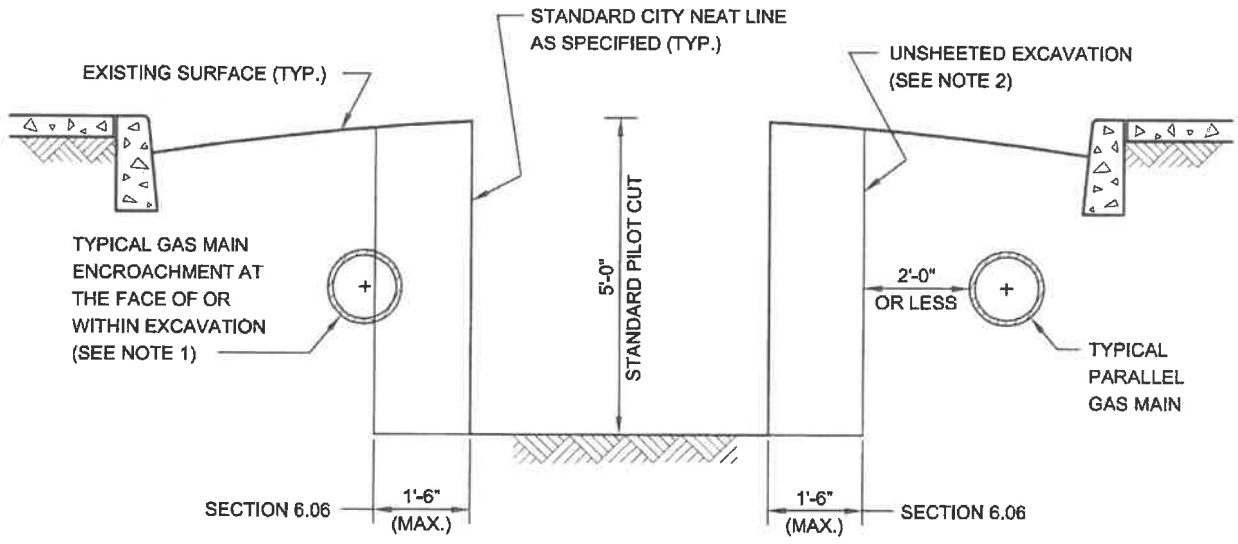

NOTES:

(1) GAS MAIN LOCATED AS SHOWN MAY HAVE TO BE REMOVED BY THE FACILITY OPERATOR PRIOR TO THE START OF CITY EXCAVATION, OTHERWISE, THE CONTRACTOR WILL BE PAID UNDER SECTION 6.06 FOR THE SAID WORK. IF GAS MAIN IS ABANDONED THEN SECTION 6.03 SHALL APPLY.

(2) EIGHTEEN (18) INCHES FROM STANDARD NEAT LINE IS THE MAXIMUM ALLOWABLE WIDTH OF AREA THAT MAY BE DISTURBED OR EXCAVATED DURING INSTALLATION OF CERTAIN TYPES OF SHEETING SYSTEMS THAT MEET THE REQUIREMENTS OF THE STANDARD SPECIFICATIONS OF THE DEPARTMENT OF DESIGN AND CONSTRUCTION OF THE CITY OF NEW YORK.

REVISED OCT. 2004 - L. ADRIEN
REVISED OCT. 1998 - J. WONG/W. PATALANO/P. MOY

V - PRELIMINARY GAS WORK TO BE PERFORMED BY FACILITY OPERATOR.

APPLICABLE TO ALL GAS DRAWINGS:

- NO CAPITAL WORK IS ANTICIPATED AT THIS TIME.
- ALL SUPPORT AND PROTECTION WORK TO BE PERFORMED BY CITY CONTRACTOR
- IF ADDITIONAL INFORMATION IS NEEDED REGARDING THE FACILITY OPERATOR'S RELOCATION WORK, THE CONTRACTOR IS ADVISED TO CONTACT THE GAS COMPANY REPRESENTATIVE:

  Neville Jacobs Jr.
  NationalGrid Energy Delivery
  287 Maspeth Avenue
  Brooklyn, NY 11211
  718-963-5612

(NO TEXT IN THIS AREA, TURN PAGE)

VI - LISTING OF APPROXIMATE LOCATIONS OF EP-7 BID ITEMS QUANTITIES.

(NO TEXT IN THIS AREA, TURN PAGE)

SCOPE OF WORK
SUPPORT AND PROTECTION
FOR CONTRACT SEK-201BN7

The City of New York Department of Design and Construction is proposing to install sewers and/or water mains and all appurtenances in various locations in The City of New York along with all work incidental thereto.

6.01.1 - Gas Main Crossing Sewer Up To 24" In Diameter. (Ea.)

30 in various locations as required.

6.01.2 - Gas Main Crossing Sewer 30" In Diameter. (Ea.)

5 in various locations as required.

6.01.3 - Gas Main Crossing Sewer 36" Thru 42" In Diameter. (Ea.)

5 in various locations as required.

6.01.8 - Gas Services Crossing Trenches And / Or Excavations. (Ea.)

200 in various locations as required.

6.01.9 - Gas Main Crossing Water Main Up To 20" In Diameter. (Ea.)

10 in various locations as required.

6.02 - Extra Excavation For The Installation Of Catch Basin Sewer Drain Pipes With Gas Interferences. (Ea.)

20 in various locations as required.

6.03 - Removal Of Abandoned Gas Facilities. All Sizes. (L.F.)

1500 in various locations as required.

SCOPE OF WORK
SUPPORT AND PROTECTION
FOR CONTRACT SEK-201BN7

The City of New York Department of Design and Construction is proposing to install sewers and/or water mains and all appurtenances in various locations in The City of New York along with all work incidental thereto.

6.03.1 - Removal Of Abandoned Gas Facilities With Possible Coal Tar Wrap. All Sizes.(L.F.)
(For National Grid Work Only)

200 in various locations as required.

6.04 - Adjust Hardware To Grade Using Spacer Rings/Adaptors (Street Repaving). (Ea.)

20 in various locations as required.

6.05 - Adjust Hardware To Grade By Resetting (Road Reconstruction). (Ea.)

20 in various locations as required.

6.06 - Special Care Excavation And Backfilling. (C.Y.)

1400 in various locations as required, including but not limited to all gas services crossing unsheeted water main trenches.

6.07 - Test Pits For Gas Facilities. (C.Y.)

100 in various locations as required.

6.09 - Trench Excavation and backfill For New Gas Mains & Services. Gas Installed By Others. (C.Y.)
(For National Grid Work Only)

50 in various locations as required.

Department of Design and Construction

INFRASTRUCTURE DIVISION
BUREAU OF DESIGN

VOLUME 3 OF 3

PROJECT ID: SEK201BN7

RECONSTRUCTION OF COLLAPSED OR DEFECTIVE SANITARY, STORM OR COMBINED SEWERS VITRIFIED CLAY PIPE IN VARIOUS LOCATIONS IN BROOKLYN

Together With All Work Incidental Thereto
BOROUGH OF BROOKLYN
CITY OF NEW YORK

_____
Contractor

_____

Dated_____, **20**___

_____