NOTICE TO BIDDERS -
NEW BID SUBMISSION PROCEDURES DUE TO COVID-19

The bid submission and opening procedures for this contract will follow the procedures set forth below.

THE BIDDER MUST CAREFULLY READ THE DATES AND TIMES IN THE PROCUREMENT DOCUMENTS, AS THEY NOW DIFFER FROM PREVIOUS DDC PROJECTS.

Bid Submission Procedures

1. The representative delivering the bid must maintain required social distancing measures – keep at least 6 feet away from others, and a mask or face covering must be worn.
2. The representative delivering the bid must comply with the Covid daily health screening required to enter the DDC office building at 3030 Thomson Ave. The time required to complete this screening must be accounted for in order to submit the bid on time.

   As such, please allow sufficient time for these procedures when arriving to deliver the bid so that the bid may be submitted on time.

   The screening requirements are as follows:

   Any guest visiting DDC will be required to follow the same health and safety measures as DDC staff, which includes wearing a mask and completing the daily Health Screening.

   Upon your arrival to 3030 Thomson Ave, please complete the health screen at the kiosk located by the left hand side of the security desk upon your entry. You will need to provide your name, email address and answer a few questions. Once you complete the health screening, you will need to receive a Green Readiness Score to enter our offices. Should you receive a Red Readiness Score, you will not be allowed to enter our offices. These steps are in place to ensure all precautionary safety measures are followed while in the office, as the health and safety of staff and visitors is our number one priority.

   The screeners will direct you towards the DDC ACCO CSB staff on the opposite side of the security desk, who will receive your bid package. When exiting the lobby, you will exit on the other side of the security desk (in a circular flow).

   If there are issues dropping off the bid, the bidder should email CSB_ProjectInquiries@ddc.nyc.gov for additional instructions.
3. All bids must be delivered by hand within the time shown in the procurement documents. No bids will be accepted by mail or parcel service (USPS, FedEx, UPS, DHL, etc.).

4. Bid submissions must be in a single, sealed envelope and clearly labeled on the outside with the following:
    a. Project ID
    b. Project Name
    c. e-PIN no.
    d. Name of Contractor
    e. Contact person
    f. Email address
    g. Phone number
5. Bid submissions must not contain any staples or paper clips.
6. The ACCO staff will provide a time stamp sticker to be applied to the bid envelope. The person dropping off the bid will be provided an opportunity to take a picture of the time stamped bid package as proof of drop off.
7. Please use the link indicated in the procurement documents to join the virtual bid opening.

NO FURTHER TEXT ON THIS PAGE

CITY OF NEW YORK
DEPARTMENT OF DESIGN AND CONSTRUCTION
DIVISION OF INFRASTRUCTURE
VOLUME 1 – BID BOOKLET

TABLE OF CONTENTS

Introduction 2

Bid Submission Requirements 3

Notices to Bidders 4

- Pre Bid Questions (PBQs) 4
- NYC Contract Financing Loan Fund 4

M/WBE Notice to Prospective Contractors 5

Affirmation 13

Item Grid and Bid Schedule 15

Pre-Award Process 17

Project References 19

- A. Contracts completed by the bidder 19
- B. Contracts currently under construction by the bidder 20
- C. Pending contracts not yet started by the bidder 21

Introduction

This Bid Booklet is intended to provide general information necessary for bidding on a DDC public works project and is part of the Contract Documents, as per Article 1.1 of the Standard Construction Contract.

As this contract is solicited via the PASSPort system, the bidder will be required to complete all of the PASSPort forms and questionnaires. These forms and questionnaires, along with the bidder's responses, will become part of the Bid Booklet.

Additional information on the PASSPort system can be found at the following website:
https://www1.nyc.gov/site/mocs/systems/passport-user-materials.page

Bid Submission Requirements

THE FOLLOWING MUST BE COMPLETED AND SUBMITTED FOR THE BID TO BE CONSIDERED RESPONSIVE:

1. Completed electronic bid submission in PASSPort;
    a. All required fields in PASSPort must be completed.
2. One-page signed Bid Submission Form delivered in person to DDC before the bid due date; and
3. Bid security, if required.
    a. If Bid security is in a form of a bid bond, bidders must include it with their electronic PASSPort submission.
    b. If Bid security is in a form of a certified check, bidders must deliver the certified check with the signed Bid Submission Form.

BIDDERS ARE ADVISED THAT PAPER BID SUBMISSIONS WILL BE DEEMED NON-RESPONSIVE. BIDDERS MUST SUBMIT THEIR BIDS ELECTRONICALLY IN PASSPORT, PROVIDE THE BID SECURITY, AND DELIVER TO DDC THE ONE-PAGE SIGNED BID SUBMISSION FOR THE BID TO BE CONSIDERED RESPONSIVE.

THE FOLLOWING MAY RESULT IN THE BID BEING FOUND NON-RESPONSIVE:

1. Any discrepancy between the total bid price listed on the Bid Submission Form and the bid information submitted in PASSPort.
2. Failure to upload required files or documents as part of a mandatory PASSPort Questionnaire response.
3. Uploading an incorrect file as part of a mandatory PASSPort Questionnaire response.

Notices to Bidders

Pre Bid Questions (PBQs)

Please be advised that PBQs should be submitted to the Agency Contact Person (CSB_projectinquiries@ddc.nyc.gov) at least five (5) business days (by 5:00 PM EST) prior to the bid opening date as indicated in the PASSPort procurement.

All PBQs must reference the Project ID. If a bidder has multiple PBQs for the same Project ID, the PBQs must be numbered sequentially, even if they are submitted separately.

While the PASSPort system has a facility for submitting inquiries, bidders are directed to send PBQs as directed above instead of using the PASSPort inquiry system.

Inquiries sent using the PASSPort inquiry system will not be considered PBQs.

NYC Contract Financing Loan Fund

If your business is working as a prime or subcontractor on a project with a City agency or City-funded entity, you may be eligible for a Contract Financing Loan from a participating lender coordinated with the NYC Department of Small Business Services (SBS). Loan repayment terms align with the contract payment schedule.

For more information: Call 311 or visit https://www1.nyc.gov/nycbusiness/article/contract-financing-loan-fund

M/WBE Notice to Prospective Contractors

PARTICIPATION BY MINORITY-OWNED AND WOMEN-OWNED BUSINESS ENTERPRISES IN CITY PROCUREMENT (9/2020 version)

ARTICLE I. M/WBE PROGRAM

Section 6-129 of the Administrative Code of the City of New York ("Section 6-129") establishes the program for participation in City procurement ("M/WBE Program") by minority-owned business enterprises ("MBEs") and women-owned business enterprises ("WBEs"), certified in accordance with Section 1304 of the New York City Charter. As stated in Section 6-129, the intent of the program is to address the impact of discrimination on the City's procurement process, and to promote the public interest in avoiding fraud and favoritism in the procurement process, increasing competition for City business, and lowering contract costs. The contract provisions contained herein are pursuant to Section 6-129, and the rules of the Department of Small Business Services ("DSBS") promulgated thereunder.

If this Contract is subject to the M/WBE Program established by Section 6-129, the specific requirements of MBE and/or WBE participation for this Contract are set forth in Schedule B of the Contract (entitled the "M/WBE Utilization Plan") and are detailed below. Contracts solicited through the Procurement and Sourcing Solutions Portal (PASSPort) will contain a Schedule B in the format outlined in the Schedule B – M/WBE Utilization Plan & PASSPort rider. The provisions of this notice will apply to contracts subject to the M/WBE Program established by Section 6-129 regardless of solicitation source.

The Contractor must comply with all applicable MBE and WBE requirements for this Contract.

All provisions of Section 6-129 are hereby incorporated in the Contract by reference and all terms used herein that are not defined herein shall have the meanings given such terms in Section 6-129.

References to MBEs or WBEs shall also include such businesses certified pursuant to the executive law where credit is required by section 311 of the New York City Charter or other provision of law.

Article I, Part A, below, sets forth provisions related to the participation goals for construction, standard and professional services contracts.

Article I, Part B, below, sets forth miscellaneous provisions related to the M/WBE Program.

PART A

PARTICIPATION GOALS FOR CONSTRUCTION, STANDARD

AND PROFESSIONAL SERVICES CONTRACTS OR TASK ORDERS

1. The **MBE and/or WBE Participation Goals** established for this Contract or Task Orders issued pursuant to this Contract, ("**Participation Goals**"), as applicable, are set forth on Schedule B, Part 1 to this Contract (see Page 1, Line 1 Total Participation Goals) or will be set forth on Schedule B, Part 1 to Task Orders issued pursuant to this Contract, as applicable.

The **Participation Goals** represent a percentage of the total dollar value of the Contract or Task Order, as applicable, that may be achieved by awarding subcontracts to firms certified with DSBS as MBEs and/or WBEs, and/or by crediting the participation of prime contractors and/or qualified joint ventures as provided in Section 3 below, unless the goals have been waived or modified by Agency in accordance with Section 6-129 and Part A, Sections 10 and 11 below, respectively.

2. If **Participation Goals** have been established for this Contract or Task Orders issued pursuant to this Contract, Contractor agrees or shall agree as a material term of the Contract that Contractor shall be subject to the **Participation Goals**, unless the goals are waived or modified by Agency in accordance with Section 6-129 and Part A, Sections 10 and 11 below, respectively.

3. If **Participation Goals** have been established for this Contract or Task Order issued pursuant to this Contract, a Contractor that is an MBE and/or WBE shall be permitted to count its own participation toward fulfillment of the relevant **Participation Goal**, provided that in accordance with Section 6-129 the value of Contractor's participation shall be determined by subtracting from the total value of the Contract or Task Order, as applicable, any amounts that the Contractor pays to direct subcontractors (as defined in Section 6-129(c)(13)), and provided further that a Contractor that is certified as both an MBE and a WBE may count its own participation either toward the goal for MBEs or the goal for WBEs, but not both.

A Contractor that is a qualified joint venture (as defined in Section 6-129(c)(30)) shall be permitted to count a percentage of its own participation toward fulfillment of the relevant **Participation Goal**. In accordance with Section 6-129, the value of Contractor's participation shall be determined by subtracting from the total value of the Contract or Task Order, as applicable, any amounts that Contractor pays to direct subcontractors, and then multiplying the remainder by the percentage to be applied to total profit to determine the amount to which an MBE or WBE is entitled pursuant to the joint venture agreement, provided that where a participant in a joint venture is certified as both an MBE and a WBE, such amount shall be counted either toward the goal for MBEs or the goal for WBEs, but not both.

4. A. If **Participation Goals** have been established for this Contract, a prospective contractor shall be required to submit with its bid or proposal, as applicable, a completed Schedule B, M/WBE Utilization Plan, Part 2 (see Pages1-2) indicating: (a) whether the contractor is an MBE or WBE, or qualified joint venture; (b) the percentage of work it intends to award to direct subcontractors; (c) in cases where the contractor intends to award direct subcontracts, a description of the type and dollar value of work designated for participation by MBEs and/or WBEs, and the time frames in which such work is scheduled to begin and end; as well as the name, addresses, and telephone numbers of the M/WBE subcontractors if required by the solicitation; and (d) the prospective contractor's required certification and affirmations. In the event that this M/WBE Utilization Plan indicates that the bidder or proposer, as applicable, does not intend to meet the **Participation Goals**, the bid or proposal, as applicable, shall be deemed non-responsive, unless Agency has granted the bidder or proposer, as applicable, a pre-award waiver of the **Participation Goals** in accordance with Section 6-129 and Part A, Section 10 below.

B. (i) If this Contract is for a master services agreement or other requirements type contract that will result in the issuance of Task Orders that will be individually registered ("Master Services Agreement") and is subject to M/WBE **Participation Goals**, a prospective contractor shall be required to submit with its bid or proposal, as applicable, a completed Schedule B, M/WBE Participation Requirements for Master Services Agreements That Will Require Individually Registered Task Orders, Part 2 (page 2) indicating the prospective contractor's certification and required affirmations to make all reasonable good faith efforts to meet participation goals established on each individual Task Order issued pursuant to this Contract, or if a partial waiver is obtained or such goals are modified by the Agency, to meet the modified **Participation Goals** by soliciting and obtaining the participation of certified MBE and/or WBE firms. In the event that the Schedule B indicates that the bidder or proposer, as applicable, does not intend to meet the **Participation Goals** that may be established on Task Orders issued pursuant to this Contract, the bid or proposal, as applicable, shall be deemed non-responsive.

(ii) **Participation Goals** on a Master Services Agreement will be established for individual Task Orders issued after the Master Services Agreement is awarded. If **Participation Goals** have been established on a Task Order, a contractor shall be required to submit a Schedule B – M/WBE Utilization Plan For Independently Registered Task Orders That Are Issued Pursuant to Master Services Agreements, Part 2 (see Pages 1-2) indicating: (a) whether the contractor is an MBE or WBE, or qualified joint venture; (b) the percentage of work it intends to award to direct subcontractors; (c) in cases where the contractor intends to award direct subcontracts, a description of the type and dollar value of work designated for participation by MBEs and/or WBEs, and the time frames in which such work is scheduled to begin and end; as well as the name, addresses, and telephone numbers of the M/WBE subcontractors if required by the solicitation; and (d) the prospective contractor's required certification and affirmations. The contractor must engage in good faith efforts to meet the **Participation Goals** as established for the Task Order unless Agency has granted the contractor a pre-award waiver of the **Participation Goals** in accordance with Section 6-129 and Part A, Section 10 below.

C. THE BIDDER/PROPOSER MUST COMPLETE THE SCHEDULE B INCLUDED HEREIN (SCHEDULE B, PART 2). A SCHEDULE B SUBMITTED BY THE BIDDER/PROPOSER WHICH DOES NOT INCLUDE THE VENDOR CERTIFICATION AND REQUIRED AFFIRMATIONS WILL BE DEEMED TO BE NON-RESPONSIVE, UNLESS A FULL WAIVER OF THE PARTICIPATION GOALS IS GRANTED (SCHEDULE B, PART 3). IN THE EVENT THAT THE CITY DETERMINES THAT THE BIDDER/PROPOSER HAS SUBMITTED A SCHEDULE B WHERE THE VENDOR CERTIFICATION AND REQUIRED AFFIRMATIONS ARE COMPLETED BUT OTHER ASPECTS OF THE SCHEDULE B ARE NOT COMPLETE, OR CONTAIN A COPY OR COMPUTATION ERROR THAT IS AT ODDS WITH THE VENDOR CERTIFICATION AND AFFIRMATIONS, THE BIDDER/PROPOSER WILL BE NOTIFIED BY THE AGENCY AND WILL BE GIVEN FOUR (4) CALENDAR DAYS FROM RECEIPT OF NOTIFICATION TO CURE THE SPECIFIED DEFICIENCIES AND RETURN A COMPLETED SCHEDULE B TO THE AGENCY. FAILURE TO DO SO WILL RESULT IN A DETERMINATION THAT THE BID/PROPOSAL IS NON-RESPONSIVE. RECEIPT OF NOTIFICATION IS DEFINED AS THE DATE NOTICE IS E-MAILED OR FAXED (IF THE BIDDER/PROPOSER HAS PROVIDED AN E-MAIL ADDRESS OR FAX NUMBER), OR NO LATER THAN FIVE (5) CALENDAR DAYS FROM THE DATE OF MAILING OR UPON DELIVERY, IF DELIVERED.

5. Where an **M/WBE** Utilization Plan has been submitted, the Contractor shall, within 30 days of issuance by Agency of a notice to proceed, submit a list of proposed persons or entities to which it intends to award subcontracts within the subsequent 12 months. In the case of multi-year contracts, such list shall also be submitted every year thereafter. The Agency may also require the Contractor to report periodically about the contracts awarded by its direct subcontractors to indirect subcontractors (as defined in Section 6-129(c)(22)). **PLEASE NOTE: If this Contract is a public works project subject to GML §101(5) (i.e., a contract valued at or below $3M for projects in New York City) or if the Contract is subject to a project labor agreement in accordance with Labor Law §222, and the bidder is required to identify at the time of bid submission its intended subcontractors for the Wicks trades (plumbing and gas fitting; steam heating, hot water heating, ventilating and air conditioning (HVAC); and electric wiring), the Contractor must identify all those to which it intends to award construction subcontracts for any portion of the Wicks trade work at the time of bid submission, regardless of what point in the life of the contract such subcontracts will occur. In identifying intended subcontractors in the bid submission, bidders may satisfy any Participation Goals established for this Contract by proposing one or more subcontractors that are MBEs and/or WBEs for any portion of the Wicks trade work.** In the event that the Contractor's selection of a subcontractor is disapproved, the Contractor shall have a reasonable time to propose alternate subcontractors.

6. MBE and WBE firms must be certified by DSBS in order for the Contractor to credit such firms' participation toward the attainment of the **Participation Goals**. Such certification must occur prior to the firms' commencement of work. A list of city-certified MBE and WBE firms may be obtained from the DSBS

website at www.nyc.gov/buycertified, by emailing DSBS at buyer@sbs.nyc.gov, by calling (212) 513-6451, or by visiting or writing DSBS at One Liberty Plaza, New York, New York, 10006, 11th floor. Eligible firms that have not yet been certified may contact DSBS in order to seek certification by visiting www.nyc.gov/getcertified, emailing MWBE@sbs.nyc.gov, or calling the DSBS certification helpline at (212) 513-6311. A firm that is certified as both an MBE and a WBE may be counted either toward the goal for MBEs or the goal for WBEs, but not both. No credit shall be given for participation by a graduate MBE or graduate WBE, as defined in Section 6-129(c)(20).

7. Where an **M/WBE** Utilization Plan has been submitted, the Contractor shall, with each voucher for payment, and/or periodically as Agency may require, submit statements, certified under penalty of perjury, which shall include, but not be limited to,: the total amount the Contractor paid to its direct subcontractors, and, where applicable pursuant to Section 6-129(j), the total amount direct subcontractors paid to indirect subcontractors; the names, addresses and contact numbers of each MBE or WBE hired as a subcontractor by the Contractor, and, where applicable, hired by any of the Contractor's direct subcontractors; and the dates and amounts paid to each MBE or WBE. The Contractor shall also submit, along with its voucher for final payment: the total amount it paid to subcontractors, and, where applicable pursuant to Section 6-129(j), the total amount its direct subcontractors paid directly to their indirect subcontractors; and a final list, certified under penalty of perjury, which shall include the name, address and contact information of each subcontractor that is an MBE or WBE, the work performed by, and the dates and amounts paid to each.

8. If payments made to, or work performed by, MBEs or WBEs are less than the amount specified in the Contractor's **M/WBE** Utilization Plan, Agency shall take appropriate action, in accordance with Section 6-129 and Article II below, unless the Contractor has obtained a modification of its **M/WBE** Utilization Plan in accordance with Section 6-129 and Part A, Section 11 below.

9. Where an **M/WBE** Utilization Plan has been submitted, and the Contractor requests a change order the value of which exceeds the greater of 10 percent of the Contract or Task Order, as applicable, or $500,000, Agency shall review the scope of work for the Contract or Task Order, as applicable, and the scale and types of work involved in the change order, and determine whether the **Participation Goals** should be modified.

10. Pre-award waiver of **the Participation Goals**.

(a) A bidder or proposer, or contractor with respect to a Task Order, may seek a pre-award full or partial waiver of the Participation Goals in accordance with Section 6-129, which requests that Agency change one or more **Participation Goals** on the grounds that the **Participation Goals** are unreasonable in light of the availability of certified firms to perform the services required, or by demonstrating that it has legitimate business reasons for proposing a lower level of subcontracting in its M/WBE Utilization Plan.

(b) To apply for a full or partial waiver of the **Participation Goals**, a bidder, proposer, or contractor, as applicable, must complete Part 3 of Schedule B **and submit such request no later than seven (7) calendar days prior to the date and time the bids, proposals, or Task Orders are due, in writing to the Agency by email at MWBEModification@ddc.nyc.gov**. **Full or partial waiver requests that are received later than seven (7) calendar days prior to the date and time the bids, proposals, or Task Orders are due may be rejected as untimely**. Bidders, proposers, or contractors, as applicable, who have submitted timely requests will receive an Agency response by no later than two (2) calendar days prior to the due date for bids, proposals, or Task Orders; provided, however, that if that date would fall on a weekend or holiday, an Agency response will be provided by close-of-business on the business day before such weekend or holiday date.

(c) If the Agency determines that the **Participation Goals** are unreasonable in light of the availability of certified firms to perform the services required, it shall revise the solicitation and extend the deadline for bids and proposals, or revise the Task Order, as applicable.

(d) Agency may grant a full or partial waiver of the **Participation Goals** to a bidder, proposer or contractor, as applicable, who demonstrates—before submission of the bid, proposal or Task Order, as applicable—that it has legitimate business reasons for proposing the level of

subcontracting in its **M/WBE** Utilization Plan. In making its determination, Agency shall consider factors that shall include, but not be limited to, whether the bidder, proposer or contractor, as applicable, has the capacity and the bona fide intention to perform the Contract without any subcontracting, or to perform the Contract without awarding the amount of subcontracts represented by the **Participation Goals**. In making such determination, Agency may consider whether the **M/WBE** Utilization Plan is consistent with past subcontracting practices of the bidder, proposer or contractor, as applicable, whether the bidder, proposer or contractor, as applicable, has made efforts to form a joint venture with a certified firm, and whether the bidder, proposer, or contractor, as applicable, has made good faith efforts to identify other portions of the Contract that it intends to subcontract.

11. Modification of **M/WBE** Utilization Plan. (a) A Contractor may request a modification of its **M/WBE** Utilization Plan after award of this Contract. **PLEASE NOTE: If this Contract is a public works project subject to GML §101(5) (i.e., a contract valued at or below $3M for projects in New York City) or if the Contract is subject to a project labor agreement in accordance with Labor Law §222, and the bidder is required to identify at the time of bid submission its intended subcontractors for the Wicks trades (plumbing and gas fitting; steam heating, hot water heating, ventilating and air conditioning (HVAC); and electric wiring), the Contractor may request a Modification of its M/WBE Utilization Plan as part of its bid submission.** The Agency may grant a request for Modification of a Contractor's **M/WBE** Utilization Plan if it determines that the Contractor has established, with appropriate documentary and other evidence, that it made reasonable, good faith efforts to meet the **Participation Goals**. In making such determination, Agency shall consider evidence of the following efforts, as applicable, along with any other relevant factors:

(i) The Contractor advertised opportunities to participate in the Contract, where appropriate, in general circulation media, trade and professional association publications and small business media, and publications of minority and women's business organizations;

(ii) The Contractor provided notice of specific opportunities to participate in the Contract, in a timely manner, to minority and women's business organizations;

(iii) The Contractor sent written notices, by certified mail or facsimile, in a timely manner, to advise MBEs or WBEs that their interest in the Contract was solicited;

(iv) The Contractor made efforts to identify portions of the work that could be substituted for portions originally designated for participation by MBEs and/or WBEs in the **M/WBE** Utilization Plan, and for which the Contractor claims an inability to retain MBEs or WBEs;

(v) The Contractor held meetings with MBEs and/or WBEs prior to the date their bids or proposals were due, for the purpose of explaining in detail the scope and requirements of the work for which their bids or proposals were solicited;

(vi) The Contractor made efforts to negotiate with MBEs and/or WBEs as relevant to perform specific subcontracts, or act as suppliers or service providers;

(vii) Timely written requests for assistance made by the Contractor to Agency's M/WBE liaison officer and to DSBS;

(viii) Description of how recommendations made by DSBS and Agency were acted upon and an explanation of why action upon such recommendations did not lead to the desired level of participation of MBEs and/or WBEs.

Agency's M/WBE officer shall provide written notice to the Contractor of the determination.

(b) The Agency may modify the **Participation Goals** when the scope of the work has been changed by the Agency in a manner that affects the scale and types of work that the Contractor indicated in its **M/WBE Utilization Plan** would be awarded to subcontractors.

12. If the Contractor was required to identify in its bid or proposal the MBEs and/or WBEs they intended to use in connection with the performance of the Contract or Task Order, substitutions to the identified firms may only be made with the approval of the Agency, which shall only be given when the Contractor has proposed to use a firm that would satisfy the **Participation Goals** to the same extent as the firm previously identified, unless the Agency determines that the Contractor has established, with appropriate documentary and other evidence, that it made reasonable, good faith efforts. In making such determination, the Agency shall require evidence of the efforts listed in Section 11(a) above, as applicable, along with any other relevant factors.

13. If this Contract is for an indefinite quantity of construction, standard or professional services or is a requirements type contract and the Contractor has submitted an **M/WBE** Utilization Plan and has committed to subcontract work to MBEs and/or WBEs in order to meet the **Participation Goals**, the Contractor will not be deemed in violation of the M/WBE Program requirements for this Contract with regard to any work which was intended to be subcontracted to an MBE and/or WBE to the extent that the Agency has determined that such work is not needed.

14. If **Participation Goals** have been established for this Contract or a Task Order issued pursuant to this Contract, at least once annually during the term of the Contract or Task Order, as applicable, Agency shall review the Contractor's progress toward attainment of its **M/WBE** Utilization Plan, including but not limited to, by reviewing the percentage of work the Contractor has actually awarded to MBE and/or WBE subcontractors and the payments the Contractor made to such subcontractors.

15. If **Participation Goals** have been established for this Contract or a Task Order issued pursuant to this Contract, Agency shall evaluate and assess the Contractor's performance in meeting those goals, and such evaluation and assessment shall become part of the Contractor's overall contract performance evaluation.

PART B

MISCELLANEOUS

1. The Contractor shall take notice that, if this solicitation requires the establishment of a **M/WBE** Utilization Plan, the resulting contract may be audited by DSBS to determine compliance with Section 6-129. See §6-129(e)(10). Furthermore, such resulting contract may also be examined by the City's Comptroller to assess compliance with the **M/WBE** Utilization Plan.

2. Pursuant to DSBS rules, construction contracts that include a requirement for a **M/WBE** Utilization Plan shall not be subject to the law governing Locally Based Enterprises set forth in Section 6-108.1 of the Administrative Code of the City of New York.

3. DSBS is available to assist contractors and potential contractors in determining the availability of MBEs and/or WBEs to participate as subcontractors, and in identifying opportunities that are appropriate for participation by MBEs and/or WBEs in contracts.

4. Prospective contractors are encouraged to enter into qualified joint venture agreements with MBEs and/or WBEs as defined by Section 6-129(c)(30).

5. By submitting a bid or proposal the Contractor hereby acknowledges its understanding of the M/WBE Program requirements set forth herein and the pertinent provisions of Section 6-129, and any rules promulgated thereunder, and if awarded this Contract, the Contractor hereby agrees to comply with the M/WBE Program requirements of this Contract and pertinent provisions of Section 6-129, and any rules promulgated thereunder, all of which shall be deemed to be material terms of this Contract. The Contractor hereby agrees to make all reasonable, good faith efforts to solicit and obtain the participation of MBEs and/or WBEs to meet the required **Participation Goals**.

ARTICLE II. ENFORCEMENT

1. If Agency determines that a bidder or proposer, as applicable, has, in relation to this procurement, violated Section 6-129 or the DSBS rules promulgated pursuant to Section 6-129, Agency may disqualify such bidder or proposer, as applicable, from competing for this Contract and the Agency may revoke such bidder's or proposer's prequalification status, if applicable.

2. Whenever Agency believes that the Contractor or a subcontractor is not in compliance with Section 6-129 or the DSBS rules promulgated pursuant to Section 6-129, or any provision of this Contract that implements Section 6-129, including, but not limited to any **M/WBE** Utilization Plan, Agency shall send a written notice to the Contractor describing the alleged noncompliance and offering the Contractor an opportunity to be heard. Agency shall then conduct an investigation to determine whether such Contractor or subcontractor is in compliance.

3. In the event that the Contractor has been found to have violated Section 6-129, the DSBS rules promulgated pursuant to Section 6-129, or any provision of this Contract that implements Section 6-129, including, but not limited to, any **M/WBE** Utilization Plan, Agency may determine that one of the following actions should be taken:

(a) entering into an agreement with the Contractor allowing the Contractor to cure the violation;

(b) revoking the Contractor's pre-qualification to bid or make proposals for future contracts;

(c) making a finding that the Contractor is in default of the Contract;

(d) terminating the Contract;

(e) declaring the Contractor to be in breach of Contract;

(f) withholding payment or reimbursement;

(g) determining not to renew the Contract;

(h) assessing actual and consequential damages;

(i) assessing liquidated damages or reducing fees, provided that liquidated damages may be based on amounts representing costs of delays in carrying out the purposes of the M/WBE Program, or in meeting the purposes of the Contract, the costs of meeting utilization goals through additional

procurements, the administrative costs of investigation and enforcement, or other factors set forth in the Contract;

(j) exercising rights under the Contract to procure goods, services or construction from another contractor and charge the cost of such contract to the Contractor that has been found to be in noncompliance; or

(k) taking any other appropriate remedy.

4. If an **M/WBE** Utilization Plan has been submitted, and pursuant to this Article II, Section 3, the Contractor has been found to have failed to fulfill its **Participation Goals** contained in its **M/WBE** Utilization Plan or the **Participation Goals** as modified by Agency pursuant to Article I, Part A, Section 11, Agency may assess liquidated damages in the amount of ten percent (10%) of the difference between the dollar amount of work required to be awarded to MBE and/or WBE firms to meet the **Participation Goals** and the dollar amount the Contractor actually awarded and paid, and/or credited, to MBE and/or WBE firms. In view of the difficulty of accurately ascertaining the loss which the City will suffer by reason of Contractor's failure to meet the **Participation Goals**, the foregoing amount is hereby fixed and agreed as the liquidated damages that the City will suffer by reason of such failure, and not as a penalty. Agency may deduct and retain out of any monies which may become due under this Contract the amount of any such liquidated damages; and in case the amount which may become due under this Contract shall be less than the amount of liquidated damages suffered by the City, the Contractor shall be liable to pay the difference.

5. Whenever Agency has reason to believe that an MBE and/or WBE is not qualified for certification, or is participating in a contract in a manner that does not serve a commercially useful function (as defined in Section 6-129(c)(8)), or has violated any provision of Section 6-129, Agency shall notify the Commissioner of DSBS who shall determine whether the certification of such business enterprise should be revoked.

6. Statements made in any instrument submitted to Agency pursuant to Section 6-129 shall be submitted under penalty of perjury and any false or misleading statement or omission shall be grounds for the application of any applicable criminal and/or civil penalties for perjury. The making of a false or fraudulent statement by an MBE and/or WBE in any instrument submitted pursuant to Section 6-129 shall, in addition, be grounds for revocation of its certification.

7. The Contractor's record in implementing its **M/WBE** Utilization Plan shall be a factor in the evaluation of its performance. Whenever Agency determines that a Contractor's compliance with an **M/WBE** Utilization Plan has been unsatisfactory, Agency shall, after consultation with the City Chief Procurement Officer, file an advice of caution form for inclusion in PASSPort as caution data.

Affirmation

The Bidder affirms and declares:

1. The said bidder is of lawful age and the only one interested in this bid; and no person, firm or corporation other than hereinbefore named has any interest in this bid, or in the Contract proposed to be taken.

2. By submission of this bid, each bidder and each person signing on behalf of any bidder certifies, and in the case of a joint bid each party thereto certifies as to its own organization, under penalty of perjury, that to the best of its knowledge and belief: (1) the prices in this bid have been arrived at independently without collusion, consultation, communication or agreement, for the purpose of restricting competition, as to any matter relating to such prices with any other bidder or with any competitor; (2) unless otherwise required by law, the prices quoted in this bid have not been knowingly disclosed by the bidder and will not knowingly be disclosed by the bidder prior to opening, directly or indirectly, to any other bidder or to any competitor; and (3) no attempt has been made or will be made by the bidder to induce any other person, partnership or corporation to submit or not to submit a bid for the purpose of restricting competition.

3. No councilman or other officer or employee or person whose salary is payable in whole or in part from the City Treasury is directly or indirectly interested in this bid, or in the supplies, materials, equipment, work or labor to which it relates, or in any of the profits thereof.

4. The bidder is not in arrears to the City of New York upon debt or contract or taxes, and is not a defaulter, as surety or otherwise, upon any obligation of the City of New York, and has not been declared not responsible, or disqualified, by any agency of the City of New York or State of New York, nor is there any proceeding pending relating to the responsibility or qualification of the bidder to receive public contracts except as set forth on the Affirmation included as disclosed in PASSPort.

5. The bidder hereby affirms that is has paid all applicable City income, excise and other taxes for all it has conducted business activities in New York City.

6. The bidder, as an individual, or as a member, partner, director or officer of the bidder, if the same be a firm, partnership or corporation, executes this document expressly warranting and representing that should this bid be accepted by the City and the Contract awarded to him, he and his subcontractors engaged in the performance:

   (1) will comply with the provisions of Section 6-108 of the Administrative Code of the City of New York and the non-discrimination provisions of Section 220a of the New York State Labor Law, as more expressly and in detail set forth in the Agreement; (2) will comply with Section 6-109 of the Administrative Code of the City of New York in relation to minimum wages and other stipulations as more expressly and in detail set forth in the Agreement; (3) have complied with the provisions of the aforesaid laws since their respective effective dates, and (4) will post notices to be furnished by the City, setting forth the requirements of the aforesaid laws in prominent and conspicuous places in each and every plant, factory, building and structure where employees engaged in the performance of the Contract can readily view it, and will continue to keep such notices posted until the supplies, materials and equipment, or work labor and services required to be furnished or rendered by the Contractor have been finally accepted by the City. In the event of any breach or violation of the foregoing, the Contractor may be subject to damages, liquidated or otherwise, cancellation of the Contract and suspension as a

bidder for a period of three years. (The words, "the bidder", "he", "his", and "him" where used shall mean the individual bidder, firm, partnership or corporation executing this bid).

7. Compliance Report

   The bidder, as an individual, or as a member, partner, director, or officer of the bidder, if the same be a firm, partnership, or corporation, (1) represents that his attention has been specifically drawn to Executive Order No. 50, dated April 25, 1980, on Equal Employment Compliance of the contract, and (2) warrants that he will comply with the provisions of Executive Order No. 50. The Employment Report must be submitted as part of the bid.

8. The bidder, as an individual, or as a member, partner, director, or officer of the bidder, if the same be a firm, partnership, or corporation, executes this document expressly warranting that he will comply with: (1) the provision of the contract on providing records, Chapter 8.

9. By submission of this bid, the bidder certifies that it now has and will continue to have the financial capability to fully perform the work required for this contract. Any award of this contract will be made in reliance upon such certification. Upon request therefor, the bidder will submit written verification of such financial capability in a form that is acceptable to the department.

10. In accordance with Section 165 of the State Finance Law, the bidder agrees that tropical hardwoods, as defined in Section 165 of the State Finance Law, shall not be utilized in the performance of this Contract, except as the same are permitted by the foregoing provision of law.

11. The bidder has visited and examined the site of the work and has carefully examined the Contract in the form approved by the Corporation Counsel, and will execute the Contract and perform all its items, covenants and conditions, and will provide, furnish and deliver all the work, materials, supplies, tools and appliances for all labor and materials necessary or required for the hereinafter named work, all in strict conformity with the Contract, for the prices set forth in the Bid Schedule.

12. M/WBE UTILIZATION PLAN: By signing its bid, the bidder agrees to the M/WBE Vendor Certification and Required Affirmations set forth below, unless a full waiver of the Participation Goals is granted.

    I hereby:

    1) acknowledge my understanding of the M/WBE participation requirements as set forth in this Contract and the pertinent provisions of Section 6-129 of the Administrative Code of the City of New York and the rules promulgated thereunder;

    2) affirm that the information supplied in support of the M/WBE Utilization Plan is true and correct;

    3) agree, if awarded this Contract, to comply with the M/WBE participation requirements of this Contract, the pertinent provisions of Section 6-129, and the rules promulgated thereunder, all of which shall be deemed to be material terms of this Contract;

    4) agree and affirm that it is a material term of this Contract that the Vendor will award the total dollar value of the M/WBE Participation Goals to certified MBEs and/or WBEs, unless a full waiver is obtained or such goals are modified by the Agency; and

    agree and affirm, if awarded this Contract, to make all reasonable, good faith efforts to meet the M/WBE Participation Goals, or If a partial waiver is obtained or such goals are modified by the Agency, to meet the modified Participation Goals by soliciting and obtaining the participation of certified MBE and/or WBE firms.

BID SUBMISSION FORM

Bidder Name: NYCC JPL JV

Procurement Title: 85021B0117-SANDRESPC East Side Coastal Resiliency from Montgomery Street to East 25th Street

RFx Name: 85021B0117-SANDRESPC East Side Coastal Resiliency from Montgomery Street to East 25th Street

The above-named bidder affirms and declares:

1. The bidder has completed and submitted all required information for the above procurement in the PASSPort system;
2. Any discrepancy between the bid price listed on this Bid Submission Form and the bid information submitted in PASSPort may result in the agency finding the bid non-responsive; and
3. This bid is being submitted in accordance with New York State General Municipal Law § 103.

Total Bid Price: (a/k/a Total Proposal Amount) $ ~~154,991,000.00~~

154,991,054.00

Bidder Signature

EIN (if applicable): 82-3633182

(EIN must match the EIN of the entity that submitted bid information in PASSPort)

Bidder Name: NYCC JPL JV

By: Donna Marie Russo, NYCC

(Name of Partner of Corporate Officer)

Signature: Donna Marie Russo

(Signature of Partner of Corporate Officer)

FORM OF BID BOND

KNOW ALL MEN BY THESE PRESENTS. That we, _____
NYCC/JPL JV

hereinafter referred to as the "Principal", and _____
VIGILANT INSURANCE COMPANY

hereinafter referred to as the "Surety" are held and firmly bound to THE CITY OF NEW YORK, hereinafter referred to as the "CITY", or to its successors and assigns in the penal sum of _____

10% OF THE CONTRACT PRICE

($_____), Dollars lawful money of the United States, for the payment of which said sum of money well and truly to be made, we, and each of us, bind ourselves, our heirs, executors, administrators, successors and assigns, jointly and severally, firmly by these presents.

Whereas, the Principal is about to submit (or has submitted) to the City the accompanying proposal, hereby made a part hereof, to enter into a contract in writing for _____

EAST SIDE COASTAL RESILIENCY FROM MONTGOMERY STREET TO EAST 25TH STREET

PROJECT ID: SANDRESPC

NOW, THEREFORE, the conditions of this obligation are such that if the Principal shall not withdraw said Proposal without the consent of the City for a period of forty-five (45) days after the opening of bids and in the event of acceptance of the Principal's Proposal by the City, if the Principal shall:

(a) Within ten (10) days after notification by the City, execute in quadruplicate and deliver to the City all the executed counterparts of the Contract in the form set forth in the Contract Documents, in accordance with the proposal as accepted, and

(b) Furnish a performance bond and separate payment bond, as may be required by the City, for the faithful performance and proper fulfillment of such Contract, which bonds shall be satisfactory in all respects to the City and shall be executed by good and sufficient sureties, and

(c) In all respects perform the agreement created by the acceptance of said Proposal as provided in the Information for Bidders, bound herewith and made a part hereof, or if the City shall reject the aforesaid Proposal, then this obligation shall be null and void; otherwise to remain in full force and effect.

In the event that the Proposal of the Principal shall be accepted and the Contract be awarded to the Principal the Surety hereunder agrees subject only to the payment by the Principal of the premium therefore, if requested by the City, to write the aforementioned performance and payment bonds in the form set forth in the Contract Documents.

It is expressly understood and agreed that the liability of the Surety for any and all claims hereunder shall in no event exceed the penal amount of this obligation as herein stated.

There shall be no liability under this bond if, in the event of the acceptance of the Principal's Proposal by the City, either a performance bond or payment bond, or both, shall not be required by the City on or before the 30th day after the date on which the City signs the Contract.

The surety, for the value received, hereby stipulates and agrees that the obligations of the Surety and its bond shall in no way be impaired or affected by any postponements of the date upon which the City will receive or open bids, or by any extensions of the time within which the City may accept the Principal's Proposal, or by any waiver by the City of any of the requirements of the Information for Bidders, and the Surety hereby waives notice of any such postponements, extensions, or waivers.

IN WITNESS WHEREOF, the Principal and the Surety have hereunto set their hands and seals and such of them as are corporations have caused their corporate seals to be hereto affixed and these presents to be signed by their proper officers the 10TH day of JANUARY, 2022.

(Seal) NYCC JPL JV (L.S.)

Principal

By: Donna Marie Russo

(Seal) VIGILANT INSURANCE COMPANY

Surety

By: _____

THOMAS HANSSON ATTORNEY-IN-FACT

ACKNOWLEDGMENT OF PRINCIPAL, IF A CORPORATION

State of _____ County of _____ ss:
On this _____ day of _____, _____, before me personally came _____ to me known, who, being by me duly sworn, did depose and say that he/she/they resides at

_____

that he/she/they is the _____ of

_____

the corporation described in and which executed the foregoing instrument; that he/she/they knows the seal of said corporation; that one of the seals affixed to said instrument is such seal; that it was so affixed by order of the directors of said corporation, and that he/she/they signed his name thereto by like order.

_____

Notary Public

ACKNOWLEDGMENT OF PRINCIPAL, IF A PARTNERSHIP

State of New York County of Richmond ss:
On this 3rd day of February, 2022, before me personally appeared Donna Marie Russo to me known and known to me to be one of the members of the firm of New York Concrete / JPL JV described in and who executed the foregoing instrument, and he/she/they acknowledged to me that he/she/they executed the same as and for the act and deed of said firm.

JERRY SICA
Notary Public, State of New York
No. 01SI 4908489
Qualified in Richmond County
Commission Expires Oct. 26, 2025

_____

Notary Public

ACKNOWLEDGMENT OF PRINCIPAL, IF AN INDIVIDUAL

State of _____ County of _____ ss:
On this _____ day of _____, _____, before me personally appeared _____ to me known and known to me to be the person described in and who executed the foregoing instrument and acknowledged that he/she/they executed the same.

_____

Notary Public

AFFIX ACKNOWLEDGMENTS AND JUSTIFICATION OF SURETIES

Individual Acknowledgment

State of _____
County of _____

On this _____ day of _____, _____, before me personally came _____ and known to me to be the individual described in and who executed the foregoing instrument, and acknowledge to me that he executed the same.

My commission expires: _____ _____
Notary Public

Firm Acknowledgment

State of _____
County of _____

On this _____ day of _____, _____, before me personally came _____ to me known and known to me to be a member of the firm of _____ described in and who executed the foregoing instrument, and he thereupon acknowledged to me that he executed the same as and for the act and deed of said firm.

My commission expires: _____ _____
Notary Public

Corporation Acknowledgment

State of NEW YORK
County of RICHMOND

On this 3RD day of FEBRUARY, 2022, before me personally came DONNA MARIE MASSO, to me known who being by me duly sworn, did depose and say that she is the PRESIDENT of NYCC/TPL JV the corporation described in and which executed the above instrument; that she knows the seal of said corporation; that the seal affixed to said instrument is such corporate seal; that it was so affixed by order of the Board of Directors of said corporation, and that she signed her name thereto by like order.

My commission expires: JERRY SICA
Notary Public, State of New York
No. 01SI4908489
Qualified in Richmond County
~~Commission Expires Oct. 26~~ 2025
Notary Public

Surety Acknowledgment

State of New York
County of New York

On 1/10/2022 before me personally came THOMAS HANSSON to me known, who, being by me duly sworn, did depose and say that he/she is an Attorney-in-Fact of VIGILANT INSURANCE COMPANY the corporation described in and which executed the within instrument; that he/she knows the corporate seal of said corporation; that the seal affixed to the within instrument is such corporate seal, and that he/she signed the said instrument and affixed the said seal as Attorney-in-Fact by authority of the Board of Directors of said corporation and by authority of this office under the Standing Resolutions thereof.

My commission expires: AL CAPPOLLA
Notary Public, State of New York
No. 01CA4890479
Qualified in New York County
Commission Expires April 27, 2023

CHUBB

Power of Attorney

Federal Insurance Company | Vigilant Insurance Company | Pacific Indemnity Company
Westchester Fire Insurance Company | ACE American Insurance Company

Know All by These Presents, that **FEDERAL INSURANCE COMPANY**, an Indiana corporation, **VIGILANT INSURANCE COMPANY**, a New York corporation, **PACIFIC INDEMNITY COMPANY**, a Wisconsin corporation, **WESTCHESTER FIRE INSURANCE COMPANY** and **ACE AMERICAN INSURANCE COMPANY** corporations of the Commonwealth of Pennsylvania, do each hereby constitute and appoint Thomas Hansson of Garden City, New York

each as their true and lawful Attorney-in-Fact to execute under such designation in their names and to affix their corporate seals to and deliver for and on their behalf as surety thereon or otherwise, bonds and undertakings and other writings obligatory in the nature thereof (other than bail bonds) given or executed in the course of business, and any instruments amending or altering the same, and consents to the modification or alteration of any instrument referred to in said bonds or obligations.

In Witness Whereof, said **FEDERAL INSURANCE COMPANY, VIGILANT INSURANCE COMPANY, PACIFIC INDEMNITY COMPANY, WESTCHESTER FIRE INSURANCE COMPANY** and **ACE AMERICAN INSURANCE COMPANY** have each executed and attested these presents and affixed their corporate seals on this **16th** day of **April, 2021.**

Dawn M. Chloros, Assistant Secretary

Stephen M. Haney, Vice President

STATE OF NEW JERSEY
County of Hunterdon ss.

On this **16th** day of **April, 2021** before me, a Notary Public of New Jersey, personally came Dawn M. Chloros and Stephen M. Haney, to me known to be Assistant Secretary and Vice President, respectively, of FEDERAL INSURANCE COMPANY, VIGILANT INSURANCE COMPANY, PACIFIC INDEMNITY COMPANY, WESTCHESTER FIRE INSURANCE COMPANY and ACE AMERICAN INSURANCE COMPANY, the companies which executed the foregoing Power of Attorney, and the said Dawn M. Chloros and Stephen M. Haney, being by me duly sworn, severally and each for herself and himself did depose and say that they are Assistant Secretary and Vice President, respectively, of FEDERAL INSURANCE COMPANY, VIGILANT INSURANCE COMPANY, PACIFIC INDEMNITY COMPANY, WESTCHESTER FIRE INSURANCE COMPANY and ACE AMERICAN INSURANCE COMPANY and know the corporate seals thereof, that the seals affixed to the foregoing Power of Attorney are such corporate seals and were thereto affixed by authority of said Companies; and that their signatures as such officers were duly affixed and subscribed by like authority.

Notarial Seal

KATHERINE J. ADELAAR
NOTARY PUBLIC OF NEW JERSEY
No. 2316685
Commission Expires July 16, 2024

Notary Public

CERTIFICATION

Resolutions adopted by the Boards of Directors of FEDERAL INSURANCE COMPANY, VIGILANT INSURANCE COMPANY, and PACIFIC INDEMNITY COMPANY on August 30, 2016; WESTCHESTER FIRE INSURANCE COMPANY on December 11, 2006; and ACE AMERICAN INSURANCE COMPANY on March 20, 2009:

"RESOLVED, that the following authorizations relate to the execution, for and on behalf of the Company, of bonds, undertakings, recognizances, contracts and other written commitments of the Company entered into in the ordinary course of business (each a "Written Commitment"):

(1) Each of the Chairman, the President and the Vice Presidents of the Company is hereby authorized to execute any Written Commitment for and on behalf of the Company, under the seal of the Company or otherwise.

(2) Each duly appointed attorney-in-fact of the Company is hereby authorized to execute any Written Commitment for and on behalf of the Company, under the seal of the Company or otherwise, to the extent that such action is authorized by the grant of powers provided for in such person's written appointment as such attorney-in-fact.

(3) Each of the Chairman, the President and the Vice Presidents of the Company is hereby authorized, for and on behalf of the Company, to appoint in writing any person the attorney-in-fact of the Company with full power and authority to execute, for and on behalf of the Company, under the seal of the Company or otherwise, such Written Commitments of the Company as may be specified in such written appointment, which specification may be by general type or class of Written Commitments or by specification of one or more particular Written Commitments.

(4) Each of the Chairman, the President and the Vice Presidents of the Company is hereby authorized, for and on behalf of the Company, to delegate in writing to any other officer of the Company the authority to execute, for and on behalf of the Company, under the Company's seal or otherwise, such Written Commitments of the Company as are specified in such written delegation, which specification may be by general type or class of Written Commitments or by specification of one or more particular Written Commitments.

(5) The signature of any officer or other person executing any Written Commitment or appointment or delegation pursuant to this Resolution, and the seal of the Company, may be affixed by facsimile on such Written Commitment or written appointment or delegation.

FURTHER RESOLVED, that the foregoing Resolution shall not be deemed to be an exclusive statement of the powers and authority of officers, employees and other persons to act for and on behalf of the Company, and such Resolution shall not limit or otherwise affect the exercise of any such power or authority otherwise validly granted or vested."

I, Dawn M. Chloros, Assistant Secretary of FEDERAL INSURANCE COMPANY, VIGILANT INSURANCE COMPANY, PACIFIC INDEMNITY COMPANY, WESTCHESTER FIRE INSURANCE COMPANY and ACE AMERICAN INSURANCE COMPANY (the "Companies") do hereby certify that

(i) the foregoing Resolutions adopted by the Board of Directors of the Companies are true, correct and in full force and effect,
(ii) the foregoing Power of Attorney is true, correct and in full force and effect.

Given under my hand and seals of said Companies at Whitehouse Station, NJ, this JANUARY 10, 2022

Dawn M. Chloros, Assistant Secretary

IN THE EVENT YOU WISH TO VERIFY THE AUTHENTICITY OF THIS BOND OR NOTIFY US OF ANY OTHER MATTER, PLEASE CONTACT US AT:
Telephone (908) 903-3493 Fax (908) 903-3656 e-mail: surety@chubb.com

VIGILANT INSURANCE COMPANY

STATEMENT OF ASSETS, LIABILITIES AND SURPLUS TO POLICYHOLDERS

Statutory Basis

December 31, 2020

(In thousands)

ASSETS		*LIABILITIES AND SURPLUS TO POLICYHOLDERS*	
Cash and Short Term Investments	$ 1,753	Outstanding Losses and Loss Expenses	$ -
United States Government, State and Municipal Bonds	156,500	Reinsurance Payable on Losses and Expenses	-
Other Bonds	99,694	Unearned Premiums	-
Stocks	-	Ceded Reinsurance Premiums Payable	89,293
Other Invested Assets	-	Other Liabilities	11,008
TOTAL INVESTMENTS	257,947	TOTAL LIABILITIES	100,301
Investments in Affiliates	-	Capital Stock	4,500
Premiums Receivable	85,289	Paid-In Surplus	25,169
Other Assets	106,680	Unassigned Funds	319,946
		SURPLUS TO POLICYHOLDERS	349,615
TOTAL ADMITTED ASSETS	$ 449,916	TOTAL LIABILITIES AND SURPLUS	$ 449,916

Investments are valued in accordance with requirements of the National Association of Insurance Commissioners. At December 31, 2020, investments with a carrying value of $6,690,286 were deposited with government authorities as required by law.

STATE OF PENNSYLVANIA

COUNTY OF PHILADELPHIA

John Taylor, being duly sworn, says that he is Senior Vice President of Vigilant Insurance Company and that to the best of his knowledge and belief the foregoing is a true and correct statement of the said Company's financial condition as of the 31 st day of December, 2020.

Docu[illegible] before me this April 7, 2021

Senior Vice President

Diane Wright
Notary Public

August 8, 2023
My commission expires

Commonwealth of Pennsylvania - Notary Seal
Diane Wright, Notary Public
Philadelphia County
My commission expires August 8, 2023
Commission number 1235745
Member, Pennsylvania Association of Notaries

SPECIAL EXPERIENCE REQUIREMENTS FOR THE BIDDER:

The Special Experience Requirements set forth below apply to the bidder. Compliance with such Special Experience Requirements will be determined solely by the City prior to an award of contract. Failure to comply with the Special Experience Requirements will result in rejection of the bid as non-responsive.

The requirements in this Section (A) apply to this contract where indicated by a blackened box (■).

■ The bidder must, within the last seven (7) consecutive years prior to the bid opening, have successfully completed in a timely fashion at least one (1) project similar in scope and type to the required work. Such prior project may have been performed as a prime contractor, subcontractor or sub-subcontractor.

The Special Experience Requirements next to the blackened box below apply to the bidder. If the bidder intends to perform such work itself, it must demonstrate compliance with the Special Experience Requirements. If the bidder intends to subcontract this work, the proposed subcontractor or sub-subcontractor must demonstrate compliance with the Special Experience Requirements. The contractor, subcontractor or sub-subcontractor (hereinafter referred to as the "Entity") that will perform any specific area of work indicated by the blackened box below, may have performed the required prior project(s) as a prime contractor, subcontractor or sub-subcontractor. Once approved, no substitution will be permitted, unless the qualifications of the proposed replacement have been approved in writing in advance by the City.

☐ **Trunk Water Main Work:** The Entity that will perform the trunk water main work must, within the last seven (7) consecutive years prior to the bid opening, have successfully completed in a timely fashion at least one (1) project similar in scope and type to the required work.

☐ **Best Management Practice Work:** Best Management Practice ("BMP") Work is any item of work in the Bid Schedule that begins with the prefix "BMP". The Entity that will perform any BMP Work must, within the last five (5) consecutive years prior to the bid opening, have successfully completed in a timely fashion at least three (3) projects similar in scope and type to the required work.
For professional services in connection with BMP Work (i.e., monitoring and reporting services), the individual who will perform the required services must, within the last five (5) consecutive years prior to the bid opening, have successfully completed in a timely fashion at least three (3) projects similar in scope and type to the required work. Additional requirements are set forth below.

- ☐ The individual serving as the Restoration Specialist (Construction Monitor) must be a Registered Landscape Architect licensed by the state of New York, or must have equivalent professional experience.
- ☐ The individual serving as the Erosion and Sediment Control Licensed/Certified Professional must be a Certified Professional in Erosion and Sediment Control (CPESC), certified by CPESC, Inc.

☐ **Micro-Tunneling/Pipe Jacking Work:** The Entity that will perform the micro-tunneling/pipe jacking work must, within the last three (3) consecutive years prior to the bid opening, have successfully completed in a timely fashion at least two (2) projects similar in scope and type to the required work.

The Contractor shall also submit proof that the Contractor has employed a Licensed Professional Engineer, currently registered in the State of New York, having experience in the construction (designing, planning, testing and inspection phases) of at a minimum two

(2) completed micropile installation projects over the past three (3) years. The Professional Engineer shall be directly responsible for the work.

☐ **OTHER:** _____

SPECIAL EXPERIENCE REQUIREMENTS FOR ENTITIES PERFORMING SPECIFIC AREAS OF WORK:

The requirements in this Section (B) apply to this contract where indicated by a blackened box (■).

The Special Experience Requirements set forth below apply to the Entity that will perform the specific area of work. **Compliance with such Special Experience Requirements will be determined solely by the City after an award of contract**. **Within two (2) weeks of award of contract, the contractor will be required to submit the qualifications of the Entity that will perform the specific area of work.** If the bidder intends to perform such work itself, it must demonstrate compliance with the Special Experience Requirements. If the bidder intends to subcontract this work, the proposed subcontractor or sub-subcontractor must demonstrate compliance with the Special Experience Requirements. Once approved, no substitution will be permitted, unless the qualifications of the proposed replacement have been approved in writing in advance by the City.

Special Experience Requirements apply to the Entity that will perform any specific area of work indicated by a blackened box. The Entity may have performed the required prior project(s) as a prime contractor, subcontractor or sub-subcontractor.

■ **Hazmat Work:** Hazmat Work is any item of work in the Bid Schedule that begins with the prefix 8.01. The Entity that will perform any Hazmat Work must, within the last three (3) consecutive years prior to the bid opening, have successfully completed in a timely fashion at least five (5) projects similar in scope and type to the required work.

■ **Pile, CFA Pile, and/or Mini-Pile Work:** The Entity that will perform the Pile and/or CFA Pile Work must, within the last three (3) consecutive years prior to the bid opening, have successfully completed in a timely fashion at least two (2) projects similar in scope and type to the required work.

For professional services in connection with Pile Work (i.e., engineering and inspection services), the individual who will perform the required services must be a Professional Engineer licensed by the state of New York. Such individual must also comply with the above requirements for prior projects.

■ **Construction Report, Monitoring and Post-Construction Report, and Continuous Real-Time Monitoring For Vibrations and Movements and Post-Construction Report Work:** The Entity that will perform the Construction Report, Monitoring For Vibrations And Movements, and Post-Construction Report Work must, within the last three (3) consecutive years prior to the bid opening, have successfully completed in a timely fashion at least two (2) projects similar in scope and type to the required work.

For professional services in connection with Reporting and Monitoring Work (i.e., engineering and inspection services), the individual who will perform the required services must be a Professional Engineer licensed by the state of New York. Such individual must also comply with the above requirements for prior projects.

■ **OTHER (by specification section):**

1. S-Pages B1. Critical Path Method (CPM) Schedule : The Contractor must employ or retain a project Scheduler with a minimum of five (5) years of experience in the use of Oracle's Primavera Project Management Primavera Project Management (P6 or later) for the purpose of developing, monitoring, maintaining and updating the Contractor's detailed Project's Schedule utilizing the latest version of Primavera Project Management P6 software (Version 15.0 or higher). The Project Scheduler must also possess at least five (5) years of relevant experience in construction, planning, scheduling, expediting and tracking the progress of the work for projects of a similar nature, size, and complexity

2. IG/PC-Pages, Section 05 52 13.05 Installer Qualifications: Engage a single installer skilled, trained and with successful and documented experience in the installation of stainless-steel welded pipe railing systems and with specific skill and successful experience in the erection of the types of materials required; and who agrees to employ only tradesmen with specific skill and successful experience in this type of work. Submit names and qualification to Engineer along with the following information on a minimum of three (3) successful projects in the last five (5) years:

   (a) Names and telephone numbers of owner, architects or engineers responsible for projects.
   (b) Approximate contract cost of the stainless-steel welded pipe railing.
   (c) Amount of area installed.

3. IG/PC-Pages, Section 09 91 00 Applicator Qualifications: Submit list of a minimum of 5 completed projects of similar size and complexity to this work. Include for each project:
   a. Project name and location
   b. Name of owner
   c. Name of contractor
   d. Name of engineer
   e. Name of coating manufacturer
   f. Approximate area of coatings applied
   g. Date of completion.

4. IG/PC-Pages, Section 26 05 20 Cable Splicer Qualifications: All low-voltage wire and cable splicing and terminations shall be done by experienced cable splicers who have worked with similar wire and cable for a period of at least five (5) years, using materials and procedures recommended by the wire and cable manufacturer.

5. IG/PC-Pages, Section 40 05 07 Pipe Support Designer Qualifications: The pipe support designer, if retained by the Contractor, shall have a minimum of five (5) years of experience in the design of pipe supports and shall show evidence of having completed at least five (5) substantially similar, successful pipe support projects of equal complexity as the systems specified.

6. IG/PC-Pages, Section 40 61 13 Field Engineer Qualifications: The field engineer shall have a minimum of five (5) years' experience in systems engineering and start up and shall have a thorough working knowledge of both the hardware and software supplied for the PMCS.

7. IG/PC-Pages, Section 40 61 13 System Supplier Project Manager Qualifications: The Project Manager shall have a minimum of ten (10) years' experience in coordination, scheduling and delivery of instrumentation and control contracts under similar [Plant]

Facilities as this Contract thorough working knowledge of contract administration as both a prime and sub-prime Vendor/Contractor.

8. IG/PC-Pages, Section 40 61 13 System Supplier Field Engineer Qualifications: The Field Engineer shall have a minimum of ten (10) years' experience in systems engineering and start-up and shall have a thorough working knowledge of both the hardware and software supplied for the PMCS.

9. IG/PC-Pages, Section 40 61 26 System Supplier Lead Trainer Qualifications: The Lead Trainer shall have a minimum of ten (10) years' experience in coordination, scheduling and delivery of instrumentation and control training at/under similar Facilities as this Contract including a thorough working knowledge of training administration as both a prime and sub-prime Vendor/Contractor.

10. IGB-Pages, Section 04 81 50 Installer Qualifications: Installer" Company must have successfully completed five (5) documented glass block projects of 1,000 square feet minimum in the past five (5) years

11. IGB-Pages, Section 05 80 00 Installer Qualifications: The architectural metal work shall be performed by a firm having five (5) years' experience in the installation of specified materials on comparable projects. The firm shall have the approval of the architectural metal materials fabricator/manufacturer. The applicator shall provide evidence of successful completion of work of similar scope to that shown and specified for this Project using similar architectural metal systems.

12. IGB-Pages, Section 07 13 26 Installer Qualifications: Installer shall have not less than ten (10) years of successful experience in the installation of waterproofing systems similar to those specified for this Project. The qualified installer shall also have completed 3 projects in the past 5 years similar in size and scope.

13. IGB-Pages, Section 07 19 10 Installer Qualifications: Installer shall have a minimum of five (5) years successful experience in the application of water-based, penetrating, concrete sealers.

14. IGB-Pages, Section 23 05 93 Balancer's Qualifications: Submit a record of at least five (5) years' experience in the testing and balancing contracting industry, engaged in HVAC work, including but not limited to:
    Names of projects.
    Approximate contract cost of the TAB Work.
    Amount of area that was tested, adjusted, and balanced for each project.

15. IGB-Pages, Section 23 31 14 Installer's Qualifications: The Contractor shall have at least five (5) years' experience in the installation of the Work specified herein. The Contractor shall employ only tradespersons with specific skills and experience in this type of Work.

16. IGB-Pages, Section 26 05 20 Cable Splicer Qualifications: All low-voltage wire and cable splicing and terminations shall be done by experienced cable splicers who have worked with similar wire and cable for a period of at least five (5) years, using materials and procedures recommended by the wire and cable manufacturer.

17. IGB-Pages, Section 26 05 48 Vibration and Seismic Controls Testing Agencies Qualifications: Independent testing agencies for V&SCs shall have fifteen (15) or more years conducting tests on V&SCs.

18. IGB-Pages, Section 26 05 48 Professional Engineer Qualifications: Calculations in relation V&SCs shall be made by a Registered Professional Engineer in New York State and who has (five) 5 or more years of experience in providing vibration and seismic control calculations.

19. IGB-Pages, Section 26 05 73: The Licensed Engineer shall be from an independent consulting firm or the equipment manufacturer and shall have a minimum of five (5) years of experience in performing Industrial Power System Studies.

20. IGB-Pages, Section 26 05 75: Licensed Professional Engineer to perform Arc Flash Studies. The Licensed Engineer performing Arc Flash Studies shall be from an independent engineering firm, or as directed by the Engineer. The Licensed Engineer performing Arc Flash Studies shall have at least five (5) years' experience in conducting Industrial Power System Studies inclusive of Arc Flash Studies for projects of similar scope.

21. IGB-Pages, Section 26 08 11 Independent Testing Companies (ITCs) conducting Electrical Testing Qualifications: ITCs conducting Electrical Testing shall have a minimum of ten (10) years conducting tests as detailed in NETA ATS.

22. IGB-Pages, Section 26 08 11 Independent Testing Companies (ITCs) conducting Thermographic Testing Qualifications: ITCs conducting Thermographic Testing shall have a minimum of ten (10) years conducting tests as detailed by the Infraspection Institute.

QUALIFICATION FORM

Name of Contractor: New York Concrete Corp

Name of Project: HAP 8

Location of Project: 28th Street, New York, NY

Owner or Owner's representative (Architect or Engineer) who is familiar with the work performed:

Name: Stefano Braganti, PE

Title: Project Manager Phone Number: 917-297-9747

Brief description of the Project completed or the Project in progress: Installation of Secant Piles, Foundation Concrete, Jet Grouting

Was the Project performed as a prime, a subcontractor or a sub-subcontractor: Prime

Amount of Contract, Subcontract or Sub-subcontract: _____

Start Date and Completion Date: _____

****

Name of Contractor: _____

Name of Project: — See attached —

Location of Project: _____

Owner or Owner's representative (Architect or Engineer) who is familiar with the work performed:

Name: _____

Title: _____ Phone Number: _____

Brief description of the Project completed or the Project in progress: _____

_____

Was the Project performed as a prime, a subcontractor or a sub-subcontractor: _____

Amount of Contract, Subcontract or Sub-subcontract: _____

Start Date and Completion Date: _____

The following are a few jobs that New York Concrete Corp. is working on or has completed within the past 5 years:

Prime Contractor / Owner	Hunter Roberts Construction 55 Water Street New York, NY 10041 Tel: (212) 699-7266	DASNY 515 Broadway Albany, NY 12207 Tel: (518) 257-3000 Citnalta (631) 563-1110	Restani Construction Corp. 42-04 Berrian Blvd Astoria, NY 11105 Tel: (718) 728-0870 Fax: (718) 728-0873	ARC Electrical Contractors 26 Delvan Street Brooklyn, NY 11231 Tel: (718) 222-8162 Fax: (718) 222-8165	DASNY 515 Broadway Albany, NY 12207 Tel: (518) 257-3000
Name & Location of Project	100 Flatbush Ave Brooklyn, NY	Lehman College Bronx, NY	Far Rockaway Streetscape Queens, NY	Bowery Bay Queens, NY	GOSR #3 Queens, NY
Surety	NA	Chubb	NA	NA	Chubb
Description	Earthwork & Excavation, Site Clearing & Grubbing, Concrete Foundation, Grade Beams, Sheeting, Shoring, Underpinning Traffic Control, DeWatering, Noise & Dust Mitigation, Fencing Piles, Caissons, Pile Caps, Waterproofing	Earthwork & Excavation, Site Clearing & Grubbing, Concrete Foundation, Grade Beams, Sheeting, Shoring, Underpinning Traffic Control, DeWatering, Noise & Dust Mitigation, Fencing Piles, Caissons, Pile Caps, Waterproofing	Earthwork & Pile Driving	Earthwork & Excavation, Site Clearing & Grubbing Traffic Control, DeWatering, Noise & Dust Mitigation, Utilities	Bioswales Infrastructure in Rockaway Queens Earthwork & Excavation, Site Clearing & Grubbing, Concrete, Drainage
Start Date	Jun-21	Jan-21	Nov-20	Dec-20	Jan-21
Completion Date	Jun-22	Oct-21	May-21	Sep-21	Jun-21
Contract Amount	22,200,000	9,000,000	2,296,650	1,800,000	680,000
Supervisor	Darran Mullahy	Jay Dier	Andrew Klimbal	Angelos Regis	Michael Costache

The following are a few jobs that New York Concrete Corp. is working on or has completed within the past 5 years:

Prime Contractor / Owner	Gilbane Building Company 88 Pine St. - 27th Fl New York, NY 10005 Tel: (212) 312-1604 Fax: (212) 312-1654	Turner Construction 375 Hudson St. New York, NY 10014 Tel: (212) 229-6160 Fax: (212) 229-6311	NYC DDC 30-30 Thomson Ave Long Island City, NY 11101 Tel: (718) 391-1000 Fax: (718) 391-2390	NYC DDC 30-30 Thomson Ave Long Island City, NY 11101 Tel: (347) 578-0948 Fax: (718) 391-2390	NYC DDC 30-30 Thomson Ave Long Island City, NY 11101 Tel: (718) 391-2251 Fax: (718) 391-2390
Name & Location of Project	Bush Terminal Brooklyn, NY	550 Washington St. - Superstructur New York, NY	GCTI10-03 Queens, NY	GCTI10-02 Queens, NY	HWPR19Q1 Queens, NY
Surety	NA	NA	Chubb	Chubb	Chubb
Description	Earthwork & Excavation, Site Clearing & Grubbing Traffic Control, DeWatering, Noise & Dust Mitigation, Utilities	Superstructure Concrete	Construction of Right-Of-Way Bioswales Infrastructure in Flushing Creek - Phase 3 Earthwork & Excavation, Site Clearing & Grubbing, Concrete, Drainage	Construction of Right-Of-Way Bioswales Infrastructure in Flushing Creek - Phase 2 Earthwork & Excavation, Site Clearing & Grubbing, Concrete, Drainage	Sidewalks and Pedestrian Ramps throughout
Start Date	Nov-20	Jun-20	Apr-20	Apr-20	Jan-20
Completion Date	Dec-21	Sep-21	Jun-22	Jun-22	Jun-21
Contract Amount	8,622,000	24,155,000	22,784,817	20,075,435	10,923,459
Supervisor	Eric Witzke	Ted Furutani	Charles Dickens	Charles Martinez	Howard Jiang

The following are a few jobs that New York Concrete Corp. is working on or has completed within the past 5 years:

Prime Contractor / Owner	Turner Construction 375 Hudson St. New York, NY 10014 Tel: (212) 229-6160 Fax: (212) 229-6311	Monadnock Construction, Inc. 155 - 3rd Street Brooklyn, NY 11231 Tel: (718) 875-8160 Fax: (718) 802-1109	Tishman Construction 100 Park Ave New York, NY 10017 Tel: (646) 271-4406 Fax: (212) 843-3991	HAP Construction, LLC 3 East 54th Street New York, NY 10022 Tel: (212) 269-3196 Fax: (212) 269-3190	Monadnock Construction, Inc. 155 - 3rd Street Brooklyn, NY 11231 Tel: (718) 875-8160 Fax: (718) 802-1109
Name & Location of Project	181 Mercer St. - Superstructure New York, NY	1490 Southern Blvd Bronx, NY	Pacific Park - B15 Brooklyn, NY	215-225 West 28th St New York, NY	155 - 3rd Street Brooklyn, NY
Surety	NA	NA	NA	Chubb	NA
Description	Superstructure Concrete	Earthwork & Excavation, Site Clearing & Grubbing, Concrete Foundation, Piles, Caissons, Sheeting, Shoring, Underpinning Traffic Control, DeWatering, Noise & Dust Mitigation, Fencing Waterproofing	Earthwork & Excavation, Site Clearing & Grubbing, Concrete Foundation, Piles, Caissons, Sheeting, Shoring, Underpinning Traffic Control, DeWatering, Noise & Dust Mitigation, Fencing Waterproofing	Earthwork & Excavation, Site Clearing & Grubbing, Concrete Foundation, Grade Beams, Sheeting, Shoring, Underpinning Traffic Control, DeWatering, Noise & Dust Mitigation, Fencing Piles, Caissons, Pile Caps, Waterproofing	Restoration of Waterway Bulkhead
Start Date	Aug-19	Jan-19	Mar-19	Aug-18	Mar-18
Completion Date	Jun-21	Jun-19	Feb-20	Jun-19	Jun-18
Contract Amount	23,600,000	3,072,500	13,559,433	20,663,949	938,351
Supervisor	Scott Walsh	Alphonse Lembo	Timothy Jarzynka	Stefano Braganti	Alphonse Lembo

The following are a few jobs that New York Concrete Corp. is working on or has completed within the past 5 years:

Prime Contractor / Owner	Peter Scalamandre & Sons, Inc. 157 Albany Ave Freeport, NY 11520 Tel: (516) 868-3000 Fax: (516) 868-3943	NYC DDC 30-30 Thomson Ave Long Island City, NY 11101 Tel: (718) 391-1000 Fax: (718) 391-2390	Turner Construction 375 Hudson St. New York, NY 10014 Tel: (212) 229-6160 Fax: (212) 229-6311	JDS Development 104 5th Ave - 9th Fl New York, NY 10011 Tel: (646) 650-2279	Monadnock Construction, Inc. 155 - 3rd Street Brooklyn, NY 11231 Tel: (718) 875-8160 Fax: (718) 802-1109
Name & Location of Project	3 Hudson Blvd New York, NY	HWS2017Q1 Queens, NY	181 Mercer St. New York, NY	9 DeKalb Ave Brooklyn, NY	One Flushing Ave Queens, NY
Surety	NA	Chubb	NA	NA	NA
Description	Support of Excavation, Sheeting, Shoring, Underpinning Caissons, DeWatering	Sidewalks and Pedestrian Ramps throughout CB 5, 10, and 12.	Earthwork & Excavation, Site Clearing & Grubbing, Concrete Foundation, Grade Beams, Sheeting, Shoring, Underpinning Traffic Control, DeWatering, Noise & Dust Mitigation, Fencing Piles, Caissons, Pile Caps, Waterproofing	Support of Excavation, Sheeting, Shoring, Underpinning Caissons, DeWatering	Earthwork & Excavation, Site Clearing & Grubbing, Caissons, Concrete Foundation, Sheeting, Shoring, Underpinning Traffic Control, DeWatering, Noise & Dust Mitigation, Fencing, Waterproofing
Start Date	Nov-17	Oct-17	Sep-17	Feb-17	Jan-17
Completion Date	Nov-18	Dec-19	Dec-18	Feb-18	Nov-17
Contract Amount	3,137,516	6,225,329	40,310,005	15,069,145	10,400,000
Supervisor	Damon Disimone	Jean Clermont	Scott Walsh	James Corral	Alphonse Lembo

The following are a few jobs that New York Concrete Corp. is working on or has completed within the past 5 years:

Prime Contractor / Owner	Hunter Roberts Construction 55 Water Street New York, NY 10041 Tel: (212) 321-6809 Fax: (212) 321-6990	RAR Construction 60 Columbus Circle New York, NY 10023 Tel: (212) 801-1000 Fax: (212) 801-1003	March Associates 601 Hamburg Turnpike New Jersey Tel: (973) 904-0213 Fax: (973) 904-0263	The Related Companies 60 Columbus Circle New York, NY 10023 Tel: (212) 801-1000 Fax: (212) 801-1003	Tishman Construction 100 Park Ave New York, NY 10017 Tel: (646) 589-0513 Fax: (212) 843-3991
Name & Location of Project	Yankee Bleacher Landing Bronx, NY	268 West Street aka 70 Vestry New York, NY	300 Lafayette New York, NY	Tower B - Retail Podium New York, NY	Riverside Building 3 New York, NY
Surety	NA	NA	Chubb	Chubb	Chubb
Description	Sitework	Superstructure Concrete	Earthwork & Excavation, Site Clearing & Grubbing, Caissons, Concrete Foundation, Sheeting, Shoring, Underpinning Traffic Control, DeWatering, Noise & Dust Mitigation, Fencing, Waterproofing	Superstructure Concrete	Earthwork & Excavation, Site Clearing & Grubbing, Caissons, Concrete Foundation, Sheeting, Shoring, Underpinning Traffic Control, DeWatering, Noise & Dust Mitigation, Fencing, Waterproofing
Start Date	Dec-16	Jun-16	Aug-16	Aug-15	Sep-15
Completion Date	Mar-17	Apr-17	Jun-17	Jun-17	Feb-17
Contract Amount	760,000	16,021,922	9,442,026	17,237,028	26,226,964
Supervisor	Paul Wassenbergh	Sean Gavigan	Todd Laubach	Steve Martinez	Bryan Boylan

The following are a few jobs that New York Concrete Corp. is working on or has completed within the past 5 years:

Prime Contractor / Owner	Tishman Construction 100 Park Ave New York, NY 10017 Tel: (646) 260-3929 Fax: (212) 843-3991	Tishman Construction 100 Park Ave New York, NY 10017 Tel: (212) 708-6800 Fax: (212) 843-3991	RAR Construction 60 Columbus Circle New York, NY 10023 Tel: (212) 801-1000 Fax: (212) 801-1003	RAR Construction 60 Columbus Circle New York, NY 10023 Tel: (212) 801-1000 Fax: (212) 801-1003	The Related Companies 60 Columbus Circle New York, NY 10023 Tel: (212) 801-1000 Fax: (212) 801-1003
Name & Location of Project	Riverside Building 4 New York, NY	160 Leroy Street New York, NY	268 West Street aka 70 Vestry New York, NY	Phase II - Superstructure New York, NY	Tower D Foundation New York, NY
Surety	Chubb	NA	NA	NA	NA
Description	Earthwork & Excavation, Site Clearing & Grubbing, Caissons, Concrete Foundation, Sheeting, Shoring, Underpinning Traffic Control, DeWatering, Noise & Dust Mitigation, Fencing, Waterproofing	Earthwork & Excavation, Site Clearing & Grubbing, Caissons, Concrete Foundation, Sheeting, Shoring, Underpinning Traffic Control, DeWatering, Noise & Dust Mitigation, Fencing, Waterproofing	Earthwork & Excavation, Site Clearing & Grubbing, Caissons, Concrete Foundation, Sheeting, Shoring, Underpinning Traffic Control, DeWatering, Noise & Dust Mitigation, Fencing, Waterproofing	Superstructure Concrete	Earthwork & Excavation, Site Clearing & Grubbing, Caissons, Concrete Foundation, Sheeting, Shoring, Underpinning Traffic Control, DeWatering, Noise & Dust Mitigation, Fencing, Waterproofing
Start Date	Sep-15	Sep-15	Aug-15	Jan-15	Feb-15
Completion Date	Apr-17	Oct-16	Dec-16	Dec-16	Mar-17
Contract Amount	27,140,133	11,961,312	17,081,981	19,068,824	18,900,764
Supervisor	Andrew Cranford	Kyle Lott	Sean Gavigan	Sean Gavigan	Rick Lorimer

QUALIFICATION FORM

Name of Contractor: J. PIZZARUSSO LANDSCAPE DBA JPL INDUSTRIES

Name of Project: INSTALLATION OF STORM, SANITARY, WATER MAIN.

Location of Project: MASON AVE STATEN ISLAND

Owner or Owner's representative (Architect or Engineer) who is familiar with the work performed:

Name: ADAM ALWIESS

Title: ASSIST. COMM. Phone Number: 917-417-6784

Brief description of the Project completed or the Project in progress: STORM, WATER MAIN, SANITARY SEWERS, PIPES, STORM CHAMBERS - (100% COMPLETE)

Was the Project performed as a prime, a subcontractor or a sub-subcontractor: PRIME / JV

Amount of Contract, Subcontract or Sub-subcontract: 33,500,000

Start Date and Completion Date: 12/30/19 - ONGOING (SCD 6/23/23)
BMP REMAINING WORK

****

Name of Contractor: _____

Name of Project: _____

Location of Project: _____

Owner or Owner's representative (Architect or Engineer) who is familiar with the work performed:

Name: _____

Title: _____ Phone Number: _____

Brief description of the Project completed or the Project in progress: _____

_____

Was the Project performed as a prime, a subcontractor or a sub-subcontractor: _____

Amount of Contract, Subcontract or Sub-subcontract: _____

Start Date and Completion Date: _____

SEE ATTACHED
FOR FULL LIST

J. Pizzirusso Landscaping Corp DBA JPL INDUSTRIES (Jobs as Prime Contractor)

	Contract #	Description	Year of Award	Agency	Percent Complete	Comptroller #	Contract Amount
1	BG-804M	Planting of New & Replacement Street Trees	2004	NYCDPR	100%	20050016990	$ 544,000.00
2	BG-104M	Planting of New & Replacement Street Trees	2004	NYCDPR	100%	20050017287	$ 287,297.00
3	CNYG-3005M	Construction of Green Streets	2005	NYCDPR	100%	20060017893	$ 250,000.00
4	BG-605M	Planting of New & Replacement Street Trees	2005	NYCDPR	100%	20050030571	$ 462,000.00
5	QG-505M	Planting of New & Replacement Street Trees	2005	NYCDPR	100%	20050034934	$ 626,000.00
6	BG-804MR	Planting of New & Replacement Street Trees	2005	NYCDPR	100%	20060019027	$ 400,000.00
7	QG-505MR	Planting of New & Replacement Street Trees	2006	NYCDPR	100%	20060034429	$ 674,000.00
8	BG-605MR	Planting of New & Replacement Street Trees	2006	NYCDPR	100%	20060037821	$ 563,000.00
9	BG-306M	Planting of New & Replacement Street Trees	2006	NYCDPR	100%	20070013063	$ 738,000.00
10	QG-606M	Planting of New & Replacement Street Trees	2006	NYCDPR	100%	20070018729	$ 453,000.00
11	CNYG-3005MR	Construction of Green Streets	2006	NYCDPR	100%	20070020526	$ 450,000.00
12	CNYG-507M	Planting of New & Replacement Street Trees	2007	NYCDPR	100%	20070035596	$ 575,000.00
13	CNYG-407M	Planting of New & Replacement Street Trees	2007	NYCDPR	100%	20070036600	$ 575,000.00
14	QG-207M	Planting of New & Replacement Street Trees	2007	NYCDPR	100%	20070037195	$ 425,000.00
15	CNYG-2906M	Construction of Green Streets	2007	NYCDPR	100%	20070037864	$ 895,000.00
16	QG-1007M	Planting of New & Replacement Street Trees	2007	NYCDPR	100%	20080015412	$ 1,050,000.00
17	QG-606MR	Planting of New & Replacement Street Trees	2007	NYCDPR	100%	20080015701	$ 850,000.00
18	QG-207MR	Planting of New & Replacement Street Trees	2008	NYCDPR	100%	20080028942	$ 490,000.00
19	CNYG-2906MR	Construction of Green Streets	2008	NYCDPR	100%	20080030071	$ 1,095,000.00
20	QG-1007MR	Planting of New & Replacement Street Trees	2008	NYCDPR	100%	20080033330	$ 1,700,000.00
21	RG-108M	Planting of New & Replacement Street Trees	2008	NYCDPR	100%	20080033802	$ 1,250,000.00
22	MG-408M	Planting of New & Replacement Street Trees	2008	NYCDPR	100%	20090005334	$ 187,500.00
23	BG-1708M	Planting of New & Replacement Street Trees	2008	NYCDPR	100%	20090007438	$ 910,000.00
24	QG-2308M	Planting of New & Replacement Street Trees	2008	NYCDPR	100%	20090011787	$ 721,000.00
25	QG-2108M	Planting of New & Replacement Street Trees	2008	NYCDPR	100%	20090011844	$ 950,000.00
26	XG-809M	Planting of New & Replacement Street Trees	2009	NYCDPR	100%	20090029100	$ 1,239,000.00
27	RG-709M	Planting of New & Replacement Street Trees	2009	NYCDPR	100%	20090029492	$ 1,701,000.00
28	BG-1109M	Planting of New & Replacement Street Trees	2009	NYCDPR	100%	20090029891	$ 1,729,000.00
29	BG-909M	Planting of New & Replacement Street Trees	2009	NYCDPR	100%	20090030216	$ 800,000.00
30	QG-2709M	Planting of New & Replacement Street Trees	2009	NYCDPR	100%	20100015386	$ 605,000.00
31	CNYG-2609M	Planting of New & Replacement Street Trees	2010	NYCDPR	100%	20101401745	$ 847,000.00
32	CNYG-5009M	Construct Storm Water Capture Greenstreets	2010	NYCDPR	100%	20101403241	$ 1,818,000.00

	Contract #	Description	Year of Award	Agency	Percent Complete	Comptroller #	Contract Amount
33	BG-210MA	Reconctruction of Plaza- Lafayette Street, Brooklyn	2012	NYCDPR	100%	20121440652	$ 737,000.00
34	GK26W03-1	ROWB Demo Area 2	2012	DEP	100%	2021442033	$ 896,200.00
35	GKNC15-05	ROWB Demo Area 3	2012	DEP	100%	20131408316	$ 508,150.00
36	Q021-109M	Reconstruction of Cunningham Park	2012	NYCDPR	100%	20121441209	$ 1,700,000.00
37	B065-112M	Ocean Parkway Malls- Brooklyn	2013	NYCDPR	100%	20131421377	$ 1,250,000.00
38	BG-212M	Ocean Parkway Malls- Brooklyn	2014	NYCDPR	100%	2014140456	$ 2,100,000.00
39	Q015-210M	Reconstruction of Forest Park- Queens	2012	NYCDPR	100%	20121442766	$ 600,000.00
40	CNYG-512M	Construction of Green Infrastructure - Citywide	2013	NYCDPR	100%	20121440850	$ 2,800,000.00
41	CNYG-1013M	Construction of Green Infrastructure - Citywide	2013	NYCDPR	100%	20141415393	$ 2,841,000.00
42	BG-1013M	Construction of Green Infrastructure - Citywide	2013	NYCDPR	100%	20141413520	$ 2,060,000.00
43	B073-211M	Reconstruct Paths & Ballfields in Prospect Pk.	2013	NYCDPR	100%	2041403516	$ 916,874.00
44	QG-214M	Planting of Street Trees - Queens	2014	NYCDPR	100%	20151403872	$ 2,450,000.00
45	BG-315M	Planting of Street Trees - Brooklyn	2015	NYCDPR	100%	20141413520	$ 1,770,000.00
46	CNYG-414M	Planting of Street Trees - Citywide	2015	NYCDPR	100%	2015422517-1	$ 2,650,000.00
47	Q015-113M	Reconstruction of Forest Park- Queens	2015	NYCDPR	100%	20151414522	$ 1,313,560.00
48	Q020-111M	Reconstruction of Ballfields- Highland Pk. Queens	2015	NYCDPR	100%	20151407249	$ 2,594,360.00
49	GKNC1501	Right of way Bioswales - Brooklyn	2015	Liro/EDC	100%	N/A	$ 4,739,505.00
50	GK26W3-03	Right of way Bioswales - Brooklyn	2015	HR/EDC	100%	N/A	$ 4,132,284.00
51	QG-813M	Right of way Bioswales - Queens	2015	NYCDPR	100%	20141417191	$ 2,658,000.00
52	B073-214M	Reconstruction of Ballfields- Prospect Pk. Brooklyn	2016	NYCDPR	100%	20161418031	$ 2,086,704.00
53	BG-1315M	Planting of Street Trees - Brooklyn	2016	NYCDPR	100%	20161413922	$ 1,800,000.00
54	BG-1215M	Planting of Street Trees - Brooklyn	2016	NYCDPR	100%	20161414075	$ 1,800,000.00
55	HWPEDSF1	School Safety Routes @ 31st Street & Broadway, Queens	2016	NYCDDC	100%	20161417326	$ 2,130,068.00
56	HWPLZ009K	Reconstruction of New Lots Triangle- Brooklyn	2016	NYCDDC	100%	20161422876	$ 2,667,626.00
57	X274-113M	Reconstruction of Retaining Walls & Site Mt. Hope Park	2016	NYCDPR	100%	20171403991	$ 3,761,639.01
58	R035-115M	Reconstruction of DeMatti Playground- Staten Island	2016	NYCDPR	100%	20161429777	$ 5,105,370.00
59	BG-116M	Planting of Street Trees - Brooklyn	2017	NYCDPR	100%	20181406773	$ 2,900,000.00
60	GQBB09-01	Right of Way Bioswales- Queens	2017	NYCDDC	100%	20161429838	$ 9,110,000.00
61	D004898	Roberto Clemente State Park- Lower Plaza Reconstruction	2017	NYSPRHP	100%	N/A	$ 5,100,000.00
62	B057-114M	Reconstruction of Dr. John's Playground, Brooklyn	2017	NYCDPR	100%	20171409895	$ 2,681,600.00
63	GQBB06-03-1	Right of way Bioswales -Queens	2017	NYCDEP	100%	2017146974	$ 9,707,000.00
64	SECBRPQ10-R	Installation of New Catch Basins - Citywide	2017	NYCDDC	100%	20181405056	$ 5,160,000.00
65	HWBUSPAD6	Installation or Replacement of Bus Pads Citywide	2017	NYCDDC	100%	20181400711	$ 3,204,632.00
66	XG32250313MA	Right of way Bioswales- Greenstreets, The Bronx	2017	NYCDPR	0%	Cancelled	$ -
67	BG-518M	Planting of Street Trees - Brooklyn	2018	NYCDPR	100%	20181427541	$ 1,700,000.00
68	SANDHW15	Reconstruction of Father Capodanno Blvd. - Midland Beach	2018	NYCDDC	100%	20181412527	$ 6,445,703.00
69	SANDHW14	Reconstruction of Father Capodanno Blvd. - South Beach	2018	NYCDDC	100%	20181420093	$ 18,180,900.00

Contract #		Description	Year of Award	Agency	Percent Complete	Comptroller #	Contract Amount
70	B429-116M	Reconstruction of The Ballfield, Playground, Sitting area and Perimeter Sidewalks at Hope Ballfield, Located on the Southwest side of Knickerbocker A venue Between Menahan and Grove Streets, In The Bororugh of Brooklyn	2018	NYCDPR	100%	20181416171	$ 2,927,210.00
71	HWMWTCB5A	Reconstruction of Liberty Street- Manhattan	2018	NYCDDC	100%	20181427663	$ 1,951,333.21
72	RED-385	Installation of Water Mains & Appurtenances in the Boroughs of Staten Island and Brooklyn	2018	NYCDDC	100%	20181425084	$ 4,650,000.00
73	BG-419M	Planting of Street Trees - Brooklyn	2019	NYCDPR	100%	20201415534	$ 2,975,000.00
74	QG-519M	Planting of Street Trees - Queens	2019	NYCDPR	100%	20201420702	$ 2,875,000.00
75	R153-118M	The Construction of a 12 Acre Multi-Purpose Field, Parking Area Retention Areas, Paths and Landscaping in Fairview Park, Located on Mohr Street Between Arthur Kill Road and Veterans Road West, in the Borough of Staten Island	2019		100%	20191407986	$ 12,288,411.60
76	SECBRKR02	Installing New Catch Basins & Reconstruction of Existing Catch Basins in the Boroughs of Brooklyn & Staten Island	2019	NYCDDC	100%	20191426223	$3,826,800.00
77	MIBBNC003	Installation of Storm and Sanitary Sewers and Replacement of Water Mains, Wet Lands Restorations including BMP Practices in Mason Avenue, Staten Island	2019	NYCDDC	55%	20201400406	$ 33,500,000.00
78	D00055551	Roberto Clemente State Park- Sports Field Upgrades	2019	NYSPRHP	100%	N/A	$ 2,000,000.00
79	BG-319MA	Planting of Street Trees - Brooklyn	2020	NYCDPR	25%	20211415751	$ 3,407,000.00
80	BG-1319M	Planting of Street Trees - Brooklyn	2020	NYCDPR	0%	20211425396	$ 9,450,000.00
81	BG-1619M	Planting of Street Trees - Brooklyn	2020	NYCDPR	0%	20221400723	$ 2,530,000.00
82	M159-219M	Reconstruction of Fredrick Johnson Park- Manhattan	2020	NYCDPR	100%	20201414689	$ 5,000,000.00
83	SECBRKR03	Installing New Catch Basins & Reconstruction of Existing Catch Basins in the Boroughs of Brooklyn & Staten Island	2020	NYCDEP	80%	20211404369	$ 3,882,600.00
84	SANDRESP	East Coast Resiliency- Early Package Jackson to Cherry Streets, Manhattan	2020	NYCDDC	100%	20201420401	$ 1,899,000.00
85	XZ-120M	Emergency Contract for Cemetery Operations and Sevices fotr Hart Island, Borough of the Bronx	2020	NYCDPR	100%	20201426567	$1,000,000.00

	Contract #	Description	Year of Award	Agency	Percent Complete	Comptroller #	Contract Amount
86	48480005	Reconstruction of Water Street from Broad Street to Fulton Streeet, Manhattan	2021	NYCEDC	10%	N/A	$ 19,051,418.82
87	SEK002380	Combined Relief Sewer and Chambers imn 7th Street Between 3rd and 4th Avenues, including Water Main, Street Lighting and Traffic Signal Work, Borough of Brooklyn	2021	NYCDDC	5%	20211414686	$ 8,984,000.00
88	B219-117M	Reconstruction of Callahan Kelly Playground, Boundeed by Fulton and Truxton Streets and Eastern Parkway and Van Sinderen Ave, Brooklyn	2021	NYCDPR	35%	2021140799	$ 18,000,000.00
89	HWS2020R	Installation of Sidewalks, Adjacent Curbs and Pedestrian Ramps as Necessary in Various Loactions, Borough of Staten Island	2021	NYCDDC	25%	20211426342	$ 2,489,031.00
90	RFP EPIN 09621P0330	Management of Hart Island - Cementary and Site Management	2021	NYCHRA	10%	N/A	$ 33,000,000.00
91	HWS2020K2	Installation of Sidewalks, Adjacent Curbs and Pedestrian Ramps as Necessary in Various Loactions, Borough of Brooklyn	2021	NYCDDC	0%	N/A	$ 6,400,000.00
92	SER200232	Construction of New Storm and Sanitary Sewers and Watermains in Xenia Street, Borough of Staten Island	2021	NYCDDC	1%		$ 4,200,000.00
						TOTAL	$ 334,404,776.64

NYC Mayor's Office of Contract Services

SCHEDULE B – M/WBE Utilization Plan

Part 1: M/WBE Participation Goals

Contract Overview (To be completed by contracting agency)

APT E-Pin# 85021B0007 FMS Project ID# SANDRESPC

Project Title EAST SIDE COASTAL RESILENCY FROM MONTGOMERY STREET TO EAST 15TH STF Agency PIN# 8502020RC0003C

Contracting Agency Department of Design and Co Bid/Proposal Response Date

Agency Address 30-30 Thomson Ave. City Long Island City State NY ZIP 11101

Contact Person Janelle Husain Title MWBE Outreach & Compliance Analyst

Telephone (718) 391-1322 Email Husainja@ddc.nyc.gov

Project Description (attach additional pages if necessary)

EAST SIDE COASTAL RESILENCY FROM MONTGOMERY STREET TO EAST 15TH STREET

SEWER WORK, INTERCEPTOR GATES AND GATE HOUSES

Bidder or proposer ☐ is required OR ☒ is not required to specifically identify the contact information of all M/WBE firms they intend to use as a subcontractor on this contract, including the M/WBE vendor name, address and telephone number in the space provided below in Part 2 Section 4.

M/WBE Participation Goals for Services

Enter the percentage amount for each category or for an unspecified Goal.

Prime Contract Industry:

Category and Breakdown:

Unspecified 10.00 %

Black American ____ %

Hispanic American ____ %

Asian American ____ %

Women ____ %

Total Participation Goals 10.00 %
Line 1

Part 2: M/WBE Participation Plan

(To be completed by the bidder/proposer unless granted a full waiver, which must be submitted with the bid/proposal in lieu of this form)

Section 1: Prime Contractor Contact Information

Tax ID# 82-3633182 FMS Vendor ID#

Business Name NYCC JPL JV Contact Person Joseph Pizzirusso

Business Address 708 Sharrotts Road City Staten Island State NY ZIP 10309

Telephone 718-531-6084 Email Jplcorp@aol.com

Section 3: Contractor M/WBE Utilization Plan

Please review the Notice to Prospective Contractors for more information on how to obtain credit for M/WBE participation. Check applicable box. The Proposer or Bidder will fulfill the M/WBE Participation Goals:

☐ As an M/WBE Prime Contractor that will self-perform and/or subcontract to other M/WBE firms a portion of the contract the value of which is at least the amount located on Lines 2 or 3 in the panels in Section 2, as applicable. The value of any work subcontracted to non-M/WBE firms will not be credited towards fulfillment of M/WBE Participation Goals. Please check all that apply to Prime Contractor: ☐ MBE ☐ WBE

☒ As a Qualified Joint Venture with an M/WBE partner, in which the value of the M/WBE partner's participation and/or the value of any work subcontracted to other M/WBE firms is at least the amount located on Lines 2 or 3 in the panels in Section 2, as applicable. The value of any work subcontracted to non-M/WBE firms will not be credited towards fulfillment of M/WBE Participation Goals.

☐ As a non-M/WBE Prime Contractor that will enter into subcontracts with M/WBE firms the value of which is at least the amount located on Lines 2 or 3 in the panels in Section 2, as applicable.

Section 2: M/WBE Utilization Goal Calculation

Prime Contractor Adopting Agency Participation Goals
For Prime Contractors (including Qualified Joint Ventures and M/WBE firms) adopting Agency M/WBE Participation Goals.

Total Bid/Proposal Value $ 154,991,054.00

multiplied by x

Total Participation Goals 10.00 %
(Line 1 above)

Calculated M/WBE Participation Amount $ 15,499,105.40
Line 2

OR

Prime Contractor With Partial Waiver Approval Adopting Revised Participation Goals
For Prime Contractors (including Qualified Joint Ventures and M/WBE firms) adopting Revised M/WBE Participation Goals.

Total Bid/Proposal Value $ ____

multiplied by x

Total Revised Participation Goals ____ %

Calculated M/WBE Participation Amount $ ____
Line 3

Tax ID# 82-3633182 APT E-Pin# 85021B0007

Section 4: General Contract Information

What is the expected percentage of the total contract dollar value that you expect to award in subcontracts for services, regardless of M/WBE status? 10.00 %

Enter a brief description of the type(s) and dollar value of subcontracts for all services you plan to subcontract if awarded this contract, along with the anticipated start and end dates for such subcontracts. For each item, indicate whether the work is designated for participation by an M/WBE. Where the contracting agency's solicitation has indicated a requirement that the bidder or proposer specifically identify the contact information of all M/WBEs they intend to use on this contract, vendors must also include the M/WBE vendor name, address and telephone number in the space provided below. Use additional sheets if necessary.

	Description of Work	Start Date (MM/YY)	End Date (MM/YY)	Planned $ Amount	Designated for M/WBE Y	Designated for M/WBE N	M/WBE Vendor Name	M/WBE Address	M/WBE Telephone
1.	Self Performed	TBD /	TBD /	$ 12,500,000.00	☐	☐	New York Concrete Corp.	708 Sharrotts Rd SI NY 10309	(718) 967 - 3720
2.	Trucking	TBD /	TBD /	$ 3,000,000.00	☐	☐	South Bay Industries	321 Lagoon Drive Copiage NY 11726	(516) 714 - 5537
3.	Engineering	TBD /	TBD /	$ 1,500,000.00	☐	☐	Miramax Engineering, PC	118 Peare Place Staten Island NY 10312	(347) 524 - 6522
4.		/	/	$	☐	☐			( ) -
5.		/	/	$	☐	☐			( ) -
6.		/	/	$	☐	☐			( ) -
7.		/	/	$	☐	☐			( ) -
8.		/	/	$	☐	☐			( ) -
9.		/	/	$	☐	☐			( ) -
10.		/	/	$	☐	☐			( ) -

Section 5: Vendor Certification and Required Affirmations

I hereby:

1. *acknowledge my understanding of the M/WBE participation requirements as set forth herein and the pertinent provisions of Section 6-129 of the Administrative Code of the City of New York ("Section 6-129"), and the rules promulgated thereunder;*
2. *affirm that the information supplied in support of this M/WBE Utilization Plan is true and correct;*
3. *agree, if awarded this Contract, to comply with the M/WBE participation requirements of this Contract, the pertinent provisions of Section 6-129, and the rules promulgated thereunder, all of which shall be deemed to be material terms of this Contract;*
4. *agree and affirm that it is a material term of this Contract that the Vendor will award the total dollar value of the M/WBE Participation Goals to certified MBEs and/or WBEs, unless a full waiver is obtained or such Goals are modified by the Agency; and*
5. *agree and affirm, if awarded this Contract, to make all reasonable, good faith efforts to meet the M/WBE Participation Goals, or If a partial waiver is obtained or such Goals are modified by the Agency, to meet the modified Participation Goals by soliciting and obtaining the participation of certified MBE and/or WBE firms.*

Signature _____ Date 2-22-2022

Print Name Joseph Pizzirusso Title Vice President

SAFETY QUESTIONNAIRE

The Bidder must include, with its bid, all information requested on this Safety Questionnaire. Failure to provide a completed and signed Safety Questionnaire at the time of bid opening may result in disqualification of the bid as non-responsive. This Safety Questionnaire will be reviewed as per Section V of the Safety Requirements for Construction Contracts, found in Volume 2 of the Contract.

1. Bidder Information:

Company Name: NYCC / JPL JV

DDC Project Number: SANDRESPC

Company Size: ☐ Ten (10) employees or less

☒ Greater than ten (10) employees

Company has previously worked for DDC: ☒ YES ☐ NO

2. Type(s) of Construction Work:

Identify the types of work that the Bidder has performed in the last three years, and the types of work that are part of this Contract.

TYPE OF WORK	LAST 3 YEARS	THIS PROJECT
General Building Construction	☐	☐
Residential Building Construction	☐	☐
Nonresidential Building Construction	☐	☐
Heavy Construction, except building	☐	☐
Highway and Street Construction	☒	☒
Heavy Construction, except highways	☐	☐
Plumbing, Heating, HVAC	☐	☐
Painting and Paper Hanging	☐	☐
Electrical Work	☐	☐
Masonry, Stonework and Plastering	☐	☐
Carpentry and Floor Work	☐	☐
Roofing, Siding, and Sheet Metal	☐	☐
Concrete Work	☐	☐
Specialty Trade Contracting	☐	☐
Asbestos Abatement		
Other (specify) _____	☐	☐

3. Experience Modification Rate:

The Experience Modification Rate (EMR) is a rating generated by the National Council of Compensation Insurance (NCCI). This rating is used to determine the contractor's premium for worker's compensation insurance. The Bidder / Contractor may obtain its EMR by contacting its insurance broker or the NCCI. If the Bidder cannot obtain its EMR, it must submit a written explanation as to why.

The Bidder must indicate its Intrastate and Interstate EMR for the past three years. [Note: For contractors with less than three years of experience, the EMR will be considered to be 1.00].

YEAR	INTRASTATE RATE	INTERSTATE RATE
2019	1.0	
2020	1.0	
2021	1.27	

If the Intrastate and/or Interstate EMR for any of the past three years is greater than 1.00, the Bidder / Contractor must attach, to this questionnaire, a written explanation for the rating and identify what corrective action was taken to correct the situation resulting in that rating.

4. OSHA Information:

☐ **YES** ☒ **NO** **Contractor has received a willful violation issued by OSHA or a New York City Department of Buildings (NYCDOB) construction-related violation within the last three years.**

☐ **YES** ☒ **NO** **Contractor has had an incident requiring OSHA notification within 8 hours (all work-related fatalities) or an incident requiring OSHA notification within 24 hours (work-related in-patient hospitalization, amputation and all loss of an eye).**

The OSHA Form 300 "Log of Work-Related Injuries and Illnesses" and OSHA Form 300A "Summary of Work-Related Injuries and Illnesses" must be submitted for the last three years for Contractors with more than ten employees.

The Bidder / Contractor must indicate the total number of hours worked by its employees, as reflected in payroll records for the past three (3) years.

The Bidder / Contractor must submit the Incident Rate for Lost Time Injuries (the Incident Rate) for the past three (3) years. The Incident Rate is calculated in accordance with the formula set forth below. For each given year, the total number of incidents is the total number of non-fatal injuries and illnesses reported on the OSHA Form 300 and OSHA Form 300A. The 200,000 hours represents the equivalent of 100 employees working forty hours a week, fifty (50) weeks per year.

$$\text{Incident Rate} = \frac{\text{Total Number of Incidents X 200,000}}{\text{Total Number of Hours Worked by Employees}}$$

YEAR	TOTAL NUMBERS OF HOURS WORKED BY EMPLOYEES	INCIDENT RATE
2019	0	0
2020	19,688.00	10.16
2021	48,190.17	4.63

If the Bidder's / Contractor's Incident Rate for any of the past three years is one point higher than the Incident Rate for the type of construction it performs (listed below), the Bidder / Contractor must attach, to this questionnaire, a written explanation for the relatively high rate.

General Building Construction 8.5
Residential Building Construction 7.0
Nonresidential Building Construction 10.2
Heavy Construction, except building 8.7
Highway and Street Construction 9.7
Heavy Construction, except highways 8.3
Plumbing, Heating, HVAC 11.3
Painting and Paper Hanging 6.9
Electrical Work 9.5
Masonry, Stonework and Plastering 10.5
Carpentry and Floor Work 12.2
Roofing, Siding, and Sheet Metal 10.3
Concrete Work 8.6
Specialty Trade Contracting 8.6

5. Safety Performance on Previous DDC Project(s)

☐ YES ☒ NO Fatality or an incident requiring OSHA notification within 24 hours (work-related in-patient hospitalization, amputation and all loss of an eye) on DDC Project(s) within the last three (3) years.

DDC Project Number(s): _____, _____, _____

The Bidder hereby affirms that all the information provided in this Safety Questionnaire and all additional pages and/or attachments, if applicable, consist of accurate representations.

Date: 4/8/22 By: _____

(Signature of Bidder: Owner, Partner, Corporate Officer)

Title: President

SAFETY QUESTIONNAIRE

The Bidder must include, with its bid, all information requested on this Safety Questionnaire. Failure to provide a completed and signed Safety Questionnaire at the time of bid opening may result in disqualification of the bid as non-responsive. This Safety Questionnaire will be reviewed as per Section V of the Safety Requirements for Construction Contracts, found in Volume 2 of the Contract.

1. Bidder Information:

Company Name: New York Concrete Corp

DDC Project Number: SANDRESPC

Company Size: ☐ Ten (10) employees or less

☒ Greater than ten (10) employees

Company has previously worked for DDC: ☒ YES ☐ NO

2. Type(s) of Construction Work:

Identify the types of work that the Bidder has performed in the last three years, and the types of work that are part of this Contract.

TYPE OF WORK	LAST 3 YEARS	THIS PROJECT
General Building Construction	☒	☐
Residential Building Construction	☒	☐
Nonresidential Building Construction	☒	☐
Heavy Construction, except building	☐	☐
Highway and Street Construction	☒	☒
Heavy Construction, except highways	☒	☐
Plumbing, Heating, HVAC	☐	☐
Painting and Paper Hanging	☐	☐
Electrical Work	☐	☐
Masonry, Stonework and Plastering	☐	☐
Carpentry and Floor Work	☐	☐
Roofing, Siding, and Sheet Metal	☐	☐
Concrete Work	☒	☒
Specialty Trade Contracting	☒	☐
Asbestos Abatement		
Other (specify) _____	☐	☐

3. Experience Modification Rate:

The Experience Modification Rate (EMR) is a rating generated by the National Council of Compensation Insurance (NCCI). This rating is used to determine the contractor's premium for worker's compensation insurance. The Bidder / Contractor may obtain its EMR by contacting its insurance broker or the NCCI. If the Bidder cannot obtain its EMR, it must submit a written explanation as to why.

The Bidder must indicate its Intrastate and Interstate EMR for the past three years. [Note: For contractors with less than three years of experience, the EMR will be considered to be 1.00].

YEAR	INTRASTATE RATE	INTERSTATE RATE
2021	0.84	N/A
2020	0.96	N/A
2019	1.04	N/A

If the Intrastate and/or Interstate EMR for any of the past three years is greater than 1.00, the Bidder / Contractor must attach, to this questionnaire, a written explanation for the rating and identify what corrective action was taken to correct the situation resulting in that rating.

4. OSHA Information:

☐ **YES** ☒ **NO** **Contractor has received a willful violation issued by OSHA or a New York City Department of Buildings (NYCDOB) construction-related violation within the last three years.**

☐ **YES** ☒ **NO** **Contractor has had an incident requiring OSHA notification within 8 hours (all work-related fatalities) or an incident requiring OSHA notification within 24 hours (work-related in-patient hospitalization, amputation and all loss of an eye).**

The OSHA Form 300 "Log of Work-Related Injuries and Illnesses" and OSHA Form 300A "Summary of Work-Related Injuries and Illnesses" must be submitted for the last three years for Contractors with more than ten employees.

The Bidder / Contractor must indicate the total number of hours worked by its employees, as reflected in payroll records for the past three (3) years.

The Bidder / Contractor must submit the Incident Rate for Lost Time Injuries (the Incident Rate) for the past three (3) years. The Incident Rate is calculated in accordance with the formula set forth below. For each given year, the total number of incidents is the total number of non-fatal injuries and illnesses reported on the OSHA Form 300 and OSHA Form 300A. The 200,000 hours represents the equivalent of 100 employees working forty hours a week, fifty (50) weeks per year.

$$\text{Incident Rate} = \frac{\text{Total Number of Incidents X 200,000}}{\text{Total Number of Hours Worked by Employees}}$$

YEAR	TOTAL NUMBERS OF HOURS WORKED BY EMPLOYEES	INCIDENT RATE
2021	331,627	2.41
2020	259,907	4.62
2019	212,018	2.83

If the Bidder's / Contractor's Incident Rate for any of the past three years is one point higher than the Incident Rate for the type of construction it performs (listed below), the Bidder / Contractor must attach, to this questionnaire, a written explanation for the relatively high rate.

General Building Construction 8.5
Residential Building Construction 7.0
Nonresidential Building Construction 10.2
Heavy Construction, except building 8.7
Highway and Street Construction 9.7
Heavy Construction, except highways 8.3
Plumbing, Heating, HVAC 11.3
Painting and Paper Hanging 6.9
Electrical Work 9.5
Masonry, Stonework and Plastering 10.5
Carpentry and Floor Work 12.2
Roofing, Siding, and Sheet Metal 10.3
Concrete Work 8.6
Specialty Trade Contracting 8.6

5. Safety Performance on Previous DDC Project(s)

☐ YES ☒ NO Fatality or an incident requiring OSHA notification within 24 hours (work-related in-patient hospitalization, amputation and all loss of an eye) on DDC Project(s) within the last three (3) years.

DDC Project Number(s): _____, _____, _____

The Bidder hereby affirms that all the information provided in this Safety Questionnaire and all additional pages and/or attachments, if applicable, consist of accurate representations.

Date: April 4, 2022 By: DonnaMarie Russo
(Signature of Bidder: Owner, Partner, Corporate Officer)

Title: DonnaMarie Russo, President

SAFETY QUESTIONNAIRE

The Bidder must include, with its bid, all information requested on this Safety Questionnaire. Failure to provide a completed and signed Safety Questionnaire at the time of bid opening may result in disqualification of the bid as non-responsive. This Safety Questionnaire will be reviewed as per Section V of the Safety Requirements for Construction Contracts, found in Volume 2 of the Contract.

1. Bidder Information:

Company Name: J. PIZZIRUSSO LANDSCAPING CORP

DDC Project Number: SANDRESPC

Company Size: ☐ Ten (10) employees or less

☒ Greater than ten (10) employees

Company has previously worked for DDC: ☒ YES ☐ NO

2. Type(s) of Construction Work:

Identify the types of work that the Bidder has performed in the last three years, and the types of work that are part of this Contract.

TYPE OF WORK	LAST 3 YEARS	THIS PROJECT
General Building Construction	☐	☐
Residential Building Construction	☐	☐
Nonresidential Building Construction	☐	☐
Heavy Construction, except building	☐	☐
Highway and Street Construction	☒	☒
Heavy Construction, except highways	☐	☐
Plumbing, Heating, HVAC	☐	☐
Painting and Paper Hanging	☐	☐
Electrical Work	☐	☐
Masonry, Stonework and Plastering	☐	☐
Carpentry and Floor Work	☐	☐
Roofing, Siding, and Sheet Metal	☐	☐
Concrete Work	☒	☒
Specialty Trade Contracting	☐	☐
Asbestos Abatement		
Other (specify) _____	☐	☐

3. Experience Modification Rate:

The Experience Modification Rate (EMR) is a rating generated by the National Council of Compensation Insurance (NCCI). This rating is used to determine the contractor's premium for worker's compensation insurance. The Bidder / Contractor may obtain its EMR by contacting its insurance broker or the NCCI. If the Bidder cannot obtain its EMR, it must submit a written explanation as to why.

The Bidder must indicate its Intrastate and Interstate EMR for the past three years. [Note: For contractors with less than three years of experience, the EMR will be considered to be 1.00].

YEAR	INTRASTATE RATE	INTERSTATE RATE
2019	1.02	
2020	0.90	
2021	0.75	

If the Intrastate and/or Interstate EMR for any of the past three years is greater than 1.00, the Bidder / Contractor must attach, to this questionnaire, a written explanation for the rating and identify what corrective action was taken to correct the situation resulting in that rating.

4. OSHA Information:

☐ **YES** ☒ **NO** **Contractor has received a willful violation issued by OSHA or a New York City Department of Buildings (NYCDOB) construction-related violation within the last three years.**

☐ **YES** ☒ **NO** **Contractor has had an incident requiring OSHA notification within 8 hours (all work-related fatalities) or an incident requiring OSHA notification within 24 hours (work-related in-patient hospitalization, amputation and all loss of an eye).**

The OSHA Form 300 "Log of Work-Related Injuries and Illnesses" and OSHA Form 300A "Summary of Work-Related Injuries and Illnesses" must be submitted for the last three years for Contractors with more than ten employees.

The Bidder / Contractor must indicate the total number of hours worked by its employees, as reflected in payroll records for the past three (3) years.

The Bidder / Contractor must submit the Incident Rate for Lost Time Injuries (the Incident Rate) for the past three (3) years. The Incident Rate is calculated in accordance with the formula set forth below. For each given year, the total number of incidents is the total number of non-fatal injuries and illnesses reported on the OSHA Form 300 and OSHA Form 300A. The 200,000 hours represents the equivalent of 100 employees working forty hours a week, fifty (50) weeks per year.

$$\text{Incident Rate} = \frac{\text{Total Number of Incidents X 200,000}}{\text{Total Number of Hours Worked by Employees}}$$

YEAR	TOTAL NUMBERS OF HOURS WORKED BY EMPLOYEES	INCIDENT RATE
2019	170,932.50	1.17
2020	133,600.00	0.00
2021	127,960.33	0.00

If the Bidder's / Contractor's Incident Rate for any of the past three years is one point higher than the Incident Rate for the type of construction it performs (listed below), the Bidder / Contractor must attach, to this questionnaire, a written explanation for the relatively high rate.

General Building Construction	8.5
Residential Building Construction	7.0
Nonresidential Building Construction	10.2
Heavy Construction, except building	8.7
Highway and Street Construction	9.7
Heavy Construction, except highways	8.3
Plumbing, Heating, HVAC	11.3
Painting and Paper Hanging	6.9
Electrical Work	9.5
Masonry, Stonework and Plastering	10.5
Carpentry and Floor Work	12.2
Roofing, Siding, and Sheet Metal	10.3
Concrete Work	8.6
Specialty Trade Contracting	8.6

5. Safety Performance on Previous DDC Project(s)

☐ YES ☒ NO Fatality or an incident requiring OSHA notification within 24 hours (work-related in-patient hospitalization, amputation and all loss of an eye) on DDC Project(s) within the last three (3) years.

DDC Project Number(s): _____, _____, _____

The Bidder hereby affirms that all the information provided in this Safety Questionnaire and all additional pages and/or attachments, if applicable, consist of accurate representations.

Date: 4/8/22 By: _____

(Signature of Bidder: Owner, Partner, Corporate Officer)

Title: PRESIDENT

Pre-Award Process

The bidder is advised that as part of the pre-award review of its bid, it may be required to submit the information described in Sections (A) through (D) below. If required, the bidder must submit such information within five (5) business days following receipt of notification from DDC that it is among the low bidders. Such notification from DDC will be by email and will specify the types of information which must be submitted directly to DDC.

In the event the bidder fails to submit the required information within the specified time frame, its bid may be rejected as nonresponsive.

****

(A) **Project Reference Form**: If required, the bidder must complete and submit the Project Reference Form set forth in this Bid Booklet. The Project Reference Form consists of 3 parts: (1) Contracts Completed by the Bidder, (2) Contracts Currently Under Construction by the Bidder, and (3) Pending Contracts Not Yet Started by the Bidder.

(B) **Copy of License**: If required, the bidder must submit a copy of the license under which the bidder will be performing the work. Such license must clearly show the following: (1) Name of the Licensee, (2) License Number, and (3) Expiration date of the License. A copy of the license will be required from bidders for the following contracts: Plumbing Work, Electrical Work and Asbestos Abatement.

(C) **Financial Information**: If required, the bidder must submit the financial information described below:

(1) Audited Financial Statements: Financial statements (Balance Sheet and Income Statement) of the entity submitting the bid, as audited by an independent auditor licensed to practice as a certified public accountant (CPA). Audited financial statements for the three most recent fiscal years must be submitted. Each such financial statement must include the auditor's standard report.

If the bidder does not have audited financial statements, it must submit an affidavit attesting to the fact that the bidder does not have such statements. In addition, the bidder must submit the following documentation covering the three most recent fiscal years: signed federal tax returns, unaudited financial statements, and a "certified review letter" from a certified public accountant (CPA) verifying the unaudited financial statements.

Unless the most recent audited or unaudited financial statement was issued within ninety (90) days, the bidder must submit interim financial information that includes data on financial position and results of operation (income data) for the current fiscal year. Such information may be summarized on a monthly or quarterly basis or at other intervals.

(2) Schedule of Aged Accounts Receivable, including portion due within ninety (90) days.

(D) **Project Specific Information**: If required, the bidder must submit the project specific information described below:

(1) Statement indicating the number of years of experience the bidder has had and in what type of construction.

(2) Resumes of all key personnel to be involved in the project, including the proposed project superintendent.

(3) List of significant pieces of equipment expected to be used for the contract, and whether such equipment is owned or leased.

(4) Description of work expected to be subcontracted, and to what firms, if known.

(5) List of key material suppliers.

(6) Preliminary bar chart time schedule

(7) Contractor's expected means of financing the project. This should be based on the assumption that the contractor is required to finance 2X average monthly billings throughout the contract period.

(8) Any other issues the contractor sees as impacting his ability to complete the project according to the contract.

In addition to the information described in Sections (A) through (D) above, the bidder shall submit such additional information as the Commissioner may require, including without limitation, an explanation or justification for specific unit price items.

The bidder is further advised that it may be required to attend a pre-award meeting with DDC representatives. If such a meeting is convened, the bidder will be advised as to any additional material to be provided.

Prime Contractor / Owner	Hunter Roberts Construction 55 Water Street New York, NY 10041 Tel: (212) 699-7266	DASNY 515 Broadway Albany, NY 12207 Tel: (518) 257-3000 Citnalta (631) 563-1110	Restani Construction Corp. 42-04 Berrian Blvd Astoria, NY 11105 Tel: (718) 728-0870 Fax: (718) 728-0873	ARC Electrical Contractors 26 Delvan Street Brooklyn, NY 11231 Tel: (718) 222-8162 Fax: (718) 222-8165
Name & Location of Project	100 Flatbush Ave Brooklyn, NY	Lehman College Bronx, NY	Far Rockaway Streetscape Queens, NY	Bowery Bay Queens, NY
Surety	NA	Chubb	NA	NA
Description	Earthwork & Excavation, Site Clearing & Grubbing, Concrete Foundation, Grade Beams, Sheeting, Shoring, Underpinning Traffic Control, DeWatering, Noise & Dust Mitigation, Fencing Piles, Caissons, Pile Caps, Waterproofing	Earthwork & Excavation, Site Clearing & Grubbing, Concrete Foundation, Grade Beams, Sheeting, Shoring, Underpinning Traffic Control, DeWatering, Noise & Dust Mitigation, Fencing Piles, Caissons, Pile Caps, Waterproofing	Earthwork & Pile Driving	Earthwork & Excavation, Site Clearing & Grubbing Traffic Control, DeWatering, Noise & Dust Mitigation, Utilities
Start Date	Jun-21	Jan-21	Nov-20	Dec-20
Completion Date	Jun-22	Oct-21	May-21	Sep-21
Contract Amount	22,200,000	9,000,000	2,296,650	1,800,000
Supervisor	Darran Mullahy	Jay Dier	Andrew Klimbal	Angelos Regis

Prime Contractor / Owner	Judlau / MTA	Mega Contracting	Mega Contracting	GeoStructures
Name & Location of Project	8 Stations Multi-Site (NYC)	203 Newport Brooklyn, NY	Nameoke Queens, NY	JFK Aeroterm Cargo Queens, NY
Surety	Chubb	N/A	N/A	N/A
Description	Steel Sheeting Secant Wall Micropiles Soldier Piles Lagging Steel Bracing Caissons Deep Shaft Exacavation Street Work	Displacement Pile Installation Load Testing	Displacement Pile Installation Load Testing	Displacement Pile Installation Load Testing
Start Date	Aug-21	Apr-22	Jul-21	April 22
Completion Date	June-22	July 22	Aug-21	Aug-22
Contract Amount	9,800,000	1,900,000	900,000	4,000,000
Supervisor	Omar Attia	Charles Sanitorou	Charles Sanitorou	Ben Lay

Prime Contractor / Owner	DASNY 515 Broadway Albany, NY 12207 Tel: (518) 257-3000	Gilbane Building Company 88 Pine St. - 27th Fl New York, NY 10005 Tel: (212) 312-1604 Fax: (212) 312-1654	Turner Construction 375 Hudson St. New York, NY 10014 Tel: (212) 229-6160 Fax: (212) 229-6311	NYC DDC 30-30 Thomson Ave Long Island City, NY 11101 Tel: (718) 391-1000 Fax: (718) 391-2390
Name & Location of Project	GOSR #3 Queens, NY	Bush Terminal Brooklyn, NY	550 Washington St. - Superstructure New York, NY	GCTI10-03 Queens, NY
Surety	Chubb	NA	NA	Chubb
Description	Bioswales Infrastructure in Rockaway Queens Earthwork & Excavation, Site Clearing & Grubbing, Concrete, Drainage	Earthwork & Excavation, Site Clearing & Grubbing Traffic Control, DeWatering, Noise & Dust Mitigation, Utilities	Superstructure Concrete	Construction of Right-Of-Way Bioswales Infrastructure in Flushing Creek - Phase 3 Earthwork & Excavation, Site Clearing & Grubbing, Concrete, Drainage
Start Date	Jan-21	Nov-20	Jun-20	Apr-20
Completion Date	Jun-21	Dec-21	Sep-21	Jun-22
Contract Amount	680,000	8,622,000	24,155,000	22,784,817
Supervisor	Michael Costache	Eric Witzke	Ted Furutani	Charles Dickens

Prime Contractor / Owner	NYC DDC 30-30 Thomson Ave Long Island City, NY 11101 Tel: (347) 578-0948 Fax: (718) 391-2390	NYC DDC 30-30 Thomson Ave Long Island City, NY 11101 Tel: (718) 391-2251 Fax: (718) 391-2390	Turner Construction 375 Hudson St. New York, NY 10014 Tel: (212) 229-6160 Fax: (212) 229-6311	Monadnock Construction, Inc. 155 - 3rd Street Brooklyn, NY 11231 Tel: (718) 875-8160 Fax: (718) 802-1109
Name & Location of Project	GCTI10-02 Queens, NY	HWPR19Q1 Queens, NY	181 Mercer St. - Superstructure New York, NY	1490 Southern Blvd Bronx, NY
Surety	Chubb	Chubb	NA	NA
Description	Construction of Right-Of-Way Bioswales Infrastructure in Flushing Creek - Phase 2 Earthwork & Excavation, Site Clearing & Grubbing, Concrete, Drainage	Sidewalks and Pedestrian Ramps throughout	Superstructure Concrete	Earthwork & Excavation, Site Clearing & Grubbing, Concrete Foundation, Piles, Caissons, Sheeting, Shoring, Underpinning Traffic Control, DeWatering, Noise & Dust Mitigation, Fencing Waterproofing
Start Date	Apr-20	Jan-20	Aug-19	Jan-19
Completion Date	Jun-22	Jun-21	Jun-21	Jun-19
Contract Amount	20,075,435	10,923,459	23,600,000	3,072,500
Supervisor	Charles Martinez	Howard Jiang	Scott Walsh	Alphonse Lembo

Prime Contractor / Owner	Tishman Construction 100 Park Ave New York, NY 10017 Tel: (646) 271-4406 Fax: (212) 843-3991	HAP Construction, LLC 3 East 54th Street New York, NY 10022 Tel: (212) 269-3196 Fax: (212) 269-3190	Monadnock Construction, Inc. 155 - 3rd Street Brooklyn, NY 11231 Tel: (718) 875-8160 Fax: (718) 802-1109	Peter Scalamandre & Sons, Inc. 157 Albany Ave Freeport, NY 11520 Tel: (516) 868-3000 Fax: (516) 868-3943
Name & Location of Project	Pacific Park - B15 Brooklyn, NY	215-225 West 28th St New York, NY	155 - 3rd Street Brooklyn, NY	3 Hudson Blvd New York, NY
Surety	NA	Chubb	NA	NA
Description	Earthwork & Excavation, Site Clearing & Grubbing, Concrete Foundation, Piles, Caissons, Sheeting, Shoring, Underpinning Traffic Control, DeWatering, Noise & Dust Mitigation, Fencing Waterproofing	Earthwork & Excavation, Site Clearing & Grubbing, Concrete Foundation, Grade Beams, Sheeting, Shoring, Underpinning Traffic Control, DeWatering, Noise & Dust Mitigation, Fencing Piles, Caissons, Pile Caps, Waterproofing	Restoration of Waterway Bulkhead	Support of Excavation, Sheeting, Shoring, Underpinning Caissons, DeWatering
Start Date	Mar-19	Aug-18	Mar-18	Nov-17
Completion Date	Feb-20	Jun-19	Jun-18	Nov-18
Contract Amount	13,559,433	20,663,949	938,351	3,137,516
Supervisor	Timothy Jarzynka	Stefano Braganti	Alphonse Lembo	Damon Disimone

Prime Contractor / Owner	NYC DDC 30-30 Thomson Ave Long Island City, NY 11101 Tel: (718) 391-1000 Fax: (718) 391-2390	Turner Construction 375 Hudson St. New York, NY 10014 Tel: (212) 229-6160 Fax: (212) 229-6311	JDS Development 104 5th Ave - 9th Fl New York, NY 10011 Tel: (646) 650-2279	Monadnock Construction, Inc. 155 - 3rd Street Brooklyn, NY 11231 Tel: (718) 875-8160 Fax: (718) 802-1109
Name & Location of Project	HWS2017Q1 Queens, NY	181 Mercer St. New York, NY	9 DeKalb Ave Brooklyn, NY	One Flushing Ave Queens, NY
Surety	Chubb	NA	NA	NA
Description	Sidewalks and Pedestrian Ramps throughout CB 5, 10, and 12.	Earthwork & Excavation, Site Clearing & Grubbing, Concrete Foundation, Grade Beams, Sheeting, Shoring, Underpinning Traffic Control, DeWatering, Noise & Dust Mitigation, Fencing Piles, Caissons, Pile Caps, Waterproofing	Support of Excavation, Sheeting, Shoring, Underpinning Caissons, DeWatering	Earthwork & Excavation, Site Clearing & Grubbing, Caissons, Concrete Foundation, Sheeting, Shoring, Underpinning Traffic Control, DeWatering, Noise & Dust Mitigation, Fencing, Waterproofing
Start Date	Oct-17	Sep-17	Feb-17	Jan-17
Completion Date	Dec-19	Dec-18	Feb-18	Nov-17
Contract Amount	6,225,329	40,310,005	15,069,145	10,400,000
Supervisor	Jean Clermont	Scott Walsh	James Corral	Alphonse Lembo

Prime Contractor / Owner	Hunter Roberts Construction 55 Water Street New York, NY 10041 Tel: (212) 321-6809 Fax: (212) 321-6990	RAR Construction 60 Columbus Circle New York, NY 10023 Tel: (212) 801-1000 Fax: (212) 801-1003	March Associates 601 Hamburg Turnpike New Jersey Tel: (973) 904-0213 Fax: (973) 904-0263	The Related Companies 60 Columbus Circle New York, NY 10023 Tel: (212) 801-1000 Fax: (212) 801-1003
Name & Location of Project	Yankee Bleacher Landing Bronx, NY	268 West Street aka 70 Vestry New York, NY	300 Lafayette New York, NY	Tower B - Retail Podium New York, NY
Surety	NA	NA	Chubb	Chubb
Description	Sitework	Superstructure Concrete	Earthwork & Excavation, Site Clearing & Grubbing, Caissons, Concrete Foundation, Sheeting, Shoring, Underpinning Traffic Control, DeWatering, Noise & Dust Mitigation, Fencing, Waterproofing	Superstructure Concrete
Start Date	Dec-16	Jun-16	Aug-16	Aug-15
Completion Date	Mar-17	Apr-17	Jun-17	Jun-17
Contract Amount	760,000	16,021,922	9,442,026	17,237,028
Supervisor	Paul Wassenbergh	Sean Gavigan	Todd Laubach	Steve Martinez

Prime Contractor / Owner	Tishman Construction 100 Park Ave New York, NY 10017 Tel: (646) 589-0513 Fax: (212) 843-3991	Tishman Construction 100 Park Ave New York, NY 10017 Tel: (646) 260-3929 Fax: (212) 843-3991	Tishman Construction 100 Park Ave New York, NY 10017 Tel: (212) 708-6800 Fax: (212) 843-3991	RAR Construction 60 Columbus Circle New York, NY 10023 Tel: (212) 801-1000 Fax: (212) 801-1003
Name & Location of Project	Riverside Building 3 New York, NY	Riverside Building 4 New York, NY	160 Leroy Street New York, NY	268 West Street aka 70 Vestry New York, NY
Surety	Chubb	Chubb	NA	NA
Description	Earthwork & Excavation, Site Clearing & Grubbing, Caissons, Concrete Foundation, Sheeting, Shoring, Underpinning Traffic Control, DeWatering, Noise & Dust Mitigation, Fencing, Waterproofing	Earthwork & Excavation, Site Clearing & Grubbing, Caissons, Concrete Foundation, Sheeting, Shoring, Underpinning Traffic Control, DeWatering, Noise & Dust Mitigation, Fencing, Waterproofing	Earthwork & Excavation, Site Clearing & Grubbing, Caissons, Concrete Foundation, Sheeting, Shoring, Underpinning Traffic Control, DeWatering, Noise & Dust Mitigation, Fencing, Waterproofing	Earthwork & Excavation, Site Clearing & Grubbing, Caissons, Concrete Foundation, Sheeting, Shoring, Underpinning Traffic Control, DeWatering, Noise & Dust Mitigation, Fencing, Waterproofing
Start Date	Sep-15	Sep-15	Sep-15	Aug-15
Completion Date	Feb-17	Apr-17	Oct-16	Dec-16
Contract Amount	26,226,964	27,140,133	11,961,312	17,081,981
Supervisor	Bryan Boylan	Andrew Cranford	Kyle Lott	Sean Gavigan

Prime Contractor / Owner	RAR Construction 60 Columbus Circle New York, NY 10023 Tel: (212) 801-1000 Fax: (212) 801-1003	The Related Companies 60 Columbus Circle New York, NY 10023 Tel: (212) 801-1000 Fax: (212) 801-1003	RAR Construction 60 Columbus Circle New York, NY 10023 Tel: (212) 801-1000 Fax: (212) 801-1003	Gilbane Building Company 88 Pine St. - 27th Fl New York, NY 10005 Tel: (212) 312-1604 Fax: (212) 312-1654
Name & Location of Project	Phase II - Superstructure New York, NY	Tower D Foundation New York, NY	Phase II New York, NY	55 Hudson Blvd. New York, NY
Surety	NA	NA	NA	Chubb
Description	Superstructure Concrete	Earthwork & Excavation, Site Clearing & Grubbing, Caissons, Concrete Foundation, Sheeting, Shoring, Underpinning Traffic Control, DeWatering, Noise & Dust Mitigation, Fencing, Waterproofing	Earthwork & Excavation, Site Clearing & Grubbing, Caissons, Concrete Foundation, Sheeting, Shoring, Underpinning Traffic Control, DeWatering, Noise & Dust Mitigation, Fencing, Waterproofing	Earthwork & Excavation, Site Clearing & Grubbing, Caissons, Concrete Foundation, Sheeting, Shoring, Underpinning Traffic Control, DeWatering, Noise & Dust Mitigation, Fencing, Waterproofing
Start Date	Jan-15	Feb-15	Jan-15	Jan-15
Completion Date	Dec-16	Mar-17	Jul-16	Dec-16
Contract Amount	19,068,824	18,900,764	14,654,797	28,034,847
Supervisor	Sean Gavigan	Rick Lorimer	Moheb Beshara	Ted Gardner

Prime Contractor / Owner	The Related Companies 60 Columbus Circle New York, NY 10023 Tel: (212) 801-1000 Fax: (212) 801-1003	The Related Companies 60 Columbus Circle New York, NY 10023 Tel: (212) 801-1000 Fax: (212) 801-1003	The Related Companies 60 Columbus Circle New York, NY 10023 Tel: (212) 801-1000 Fax: (212) 801-1003	Skanska USA Building, Inc. 350 5th Ave New York, NY 10118 Tel: (631) 774-4558 Fax: (866) 897-3110
Name & Location of Project	Tower D Caissons New York, NY	520 West 28th St New York, NY	205 East 92nd St. New York, NY	Mt. Sinai Queens, NY
Surety	Chubb	NA	NA	NA
Description	Caisson Installation	Earthwork & Excavation, Site Clearing & Grubbing, Concrete Foundation, Grade Beams, Sheeting, Shoring, Underpinning Traffic Control, DeWatering, Noise & Dust Mitigation, Fencing, Waterproofing	Earthwork & Excavation, Site Clearing & Grubbing, Concrete Foundation, Grade Beams, Sheeting, Shoring, Underpinning Traffic Control, DeWatering, Noise & Dust Mitigation, Fencing, Waterproofing	Earthwork & Excavation, Site Clearing & Grubbing, Concrete Foundation, Grade Beams, Sheeting, Shoring, Underpinning Traffic Control, DeWatering, Noise & Dust Mitigation, Fencing, Waterproofing
Start Date	Nov-14	Mar-14	Nov-13	Nov-13
Completion Date	May-16	Dec-15	Aug-16	Dec-14
Contract Amount	3,903,419	9,770,625	8,200,000	4,726,000
Supervisor	Rick Lorimer	Michael Giuliano	James Harris	Brian McGowan

Prime Contractor / Owner	F.J. Sciame Construction Co., Inc. 14 Wall Street New York, NY 10005 Tel: (212) 709-2594 Fax: (212) 248-5299	Turner Construction 375 Hudson St. New York, NY 10014 Tel: (212) 229-6160 Fax: (212) 229-6311	Lend Lease 200 Park Ave New York, NY Tel: (212) 592-6700 Fax: (212) 592-6988	Lend Lease 200 Park Ave New York, NY Tel: (212) 592-6700 Fax: (212) 592-6988
Name & Location of Project	CCNY - New Academic Bldg New York, NY	Rudin West Village New York, NY	Columbia Manhattanville - Con Ed New York, NY	Columbia Manhattanville New York, NY
Surety	NA	NA	Chubb	Chubb
Description	Earthwork & Excavation, Site Clearing & Grubbing, Concrete Foundation, Grade Beams, Sheeting, Shoring, Underpinning Traffic Control, DeWatering, Noise & Dust Mitigation, Fencing Piles, Caissons, Pile Caps, Waterproofing	Earthwork & Excavation, Site Clearing & Grubbing, Concrete Foundation, Grade Beams, Sheeting, Shoring, Underpinning Traffic Control, DeWatering, Noise & Dust Mitigation, Fencing Piles, Caissons, Pile Caps, Waterproofing	Con Ed Vault, GeoFoam, Timber Mats	Concrete Slabs on Metal Deck
Start Date	Jul-13	May-13	Jan-13	Jan-13
Completion Date	NA	Jun-15	May-15	May-15
Contract Amount	16,639,392	28,350,000	1,436,741	2,178,240
Supervisor	Melissa Steeves	Melissa Herder	Kevin Taborsky	Kevin Taborsky

Prime Contractor / Owner	The Related Companies 60 Columbus Circle New York, NY 10023 Tel: (212) 801-1000 Fax: (212) 801-1003	Skanska USA Building, Inc. 350 5th Ave New York, NY 10118 Tel: (973) 343-8391 Fax: (866) 897-3110	Monadnock Construction, Inc. 155 - 3rd Street Brooklyn, NY 11231 Tel: (718) 875-8160 Fax: (718) 802-1109	Monadnock Construction, Inc. 155 - 3rd Street Brooklyn, NY 11231 Tel: (718) 875-8160 Fax: (718) 802-1109
Name & Location of Project	Hudson Yards - Tower C New York, NY	Columbia University New York, NY	Courtlandt Crescent Bronx, NY	Markham Gardens Staten Island, NY
Surety	Chubb	NA	NA	NA
Description	Earthwork & Excavation, Site Clearing & Grubbing, Concrete Foundation, Grade Beams, Sheeting, Shoring, Underpinning Traffic Control, DeWatering, Noise & Dust Mitigation, Fencing Piles, Caissons, Pile Caps, Waterproofing	Earthwork & Excavation Minipiles Elevated Slab	Earthwork & Excavation, Site Clearing & Grubbing, Concrete Foundation, Grade Beams, Sheeting, Shoring, Underpinning Traffic Control, DeWatering, Noise & Dust Mitigation, Fencing, Waterproofing	Earthwork & Excavation, Site Clearing & Grubbing, Concrete Foundation, Grade Beams, Sheeting, Shoring, Underpinning Traffic Control, DeWatering, Noise & Dust Mitigation, Fencing, Waterproofing
Start Date	Dec-12	Apr-12	Jul-11	Jul-11
Completion Date	Jun-15	May-13	May-13	Mar-13
Contract Amount	49,553,672	1,122,327	4,739,328	1,607,656
Supervisor	Scott Levy	Chad Alger	Bob Wieda	Bob Wieda

Prime Contractor / Owner	Gilbane Building Company 2 Rector St. New York, NY 10006 Tel: (212) 312-1604 Fax: (212) 312-1654	NYC DDC 30-30 Thomson Ave Long Island City, NY 11101 Tel: (718) 391-2251 Fax: (718) 391-2390	NYC DDC 30-30 Thomson Ave Long Island City, NY 11101 Tel: (718) 391-2251 Turner/STV (718) 747-7010	DASNY 515 Broadway Albany, NY 12207 Tel: (518) 257-3000 Skanska (646) 548-1950
Name & Location of Project	Urban Health Bronx, NY	Palisade Retaining Wall Bronx, NY	NY Police Academy Fdn West 19A Queens, NY	CUNY - CCNY GMP 8.2 New York, NY
Surety	Chubb	Chubb	Chubb	NA
Description	Earthwork & Excavation Concrete Foundation Site Clearing & Grubbing Traffic Control Noise Mitigation & Fencing	Earthwork & Excavation, Site Clearing & Grubbing, Concrete Foundation, Reconstruction of Retaining Wall Traffic Control, Noise & Dust Mitigation, Fencing,	Earthwork & Excavation, Site Clearing & Grubbing, Concrete Foundation, Grade Beams, Sheeting, Shoring, Underpinning Traffic Control, DeWatering, Noise & Dust Mitigation, Fencing Pile Caps, Waterproofing	Earthwork & Utility Work
Start Date	Jun-11	Jun-11	May-11	Mar-11
Completion Date	Apr-12	Jun-13	Dec-12	Nov-13
Contract Amount	1,646,612	3,599,794	14,670,815	3,372,151
Supervisor	Jon DiBiase	John Pavlik	Daniel Dillon	Michael Franco

Prime Contractor / Owner	DASNY 515 Broadway Albany, NY 12207 Tel: (518) 257-3000 Skanska (646) 548-1950	Bovis Lend Lease 200 Park Ave New York, NY Tel: (212) 592-6700 Fax: (212) 592-6988	Turner Construction 375 Hudson St. New York, NY 10014 Tel: (212) 229-6160 Fax: (212) 229-6311	Monadnock Construction, Inc. 155 - 3rd Street Brooklyn, NY 11231 Tel: (718) 875-8160 Fax: (718) 802-1109
Name & Location of Project	CUNY - CCNY GMP 8.1 New York, NY	29 Flatbush Brooklyn, NY	Maiden Lane / JSSB New York, NY	Genesis II Brooklyn, NY
Surety	NA	Chubb	Chubb	NA
Description	Earthwork & Utility Work	Earthwork & Excavation Caissons & Piles Concrete Foundation Site Clearing & Grubbing Traffic Control Noise Mitigation & Fencing	Concrete Foundation, Topping Slabs, Utility Work, Sitework	Earthwork & Excavation Concrete Foundation Site Clearing & Grubbing Sitework
Start Date	Mar-11	Jan-11	Jan-11	Jul-10
Completion Date	Sep-13	Dec-13	Feb-12	Nov-11
Contract Amount	687,234	8,050,000	428,655	2,150,000
Supervisor	Michael Franco	Kevin Mangan	John DePalma	Robert Burton

Prime Contractor / Owner	Turner Construction 375 Hudson St. New York, NY 10014 Tel: (212) 229-6160 Fax: (212) 229-6311	Monadnock Construction, Inc. 155 - 3rd Street Brooklyn, NY 11231 Tel: (718) 875-8160 Fax: (718) 802-1109	PA NY&NJ 233 Park Ave New York, NY 10013 Tel: (212) 435-5605	Tishman 100 Broadway - 5th Fl New York, NY Tel: (917) 723-4910 thru DCM Erectors
Name & Location of Project	Pier 15 New York, NY	Lafayette Manor Senior Housing Staten Island, NY	World Trade Center New York, NY	World Trade Center New York, NY
Surety	Chubb	NA	Chubb	Chubb
Description	Sitework, Planters, Topping Slabs, Railings, Pavers	Earthwork & Excavation Concrete Foundation Site Clearing & Grubbing Traffic Control Noise Mitigation & Fencing	Rock Excavation, Rock Anchors, Concrete Footings	M18000 Crane Pad
Start Date	Jul-10	Mar-10	Nov-09	Apr-10
Completion Date	Feb-12	Sep-11	Apr-10	Jun-10
Contract Amount	1,770,000	1,272,500	1,520,000	569,301
Supervisor	John DePalma	Bill Harwood	Thomas Scarcella	Eric Reid

Prime Contractor / Owner	ARC Electrical Contractors 26 Delvan Street Brooklyn, NY 11231 Tel: (718) 222-8162 Fax: (718) 222-8165	DASNY 515 Broadway Albany, NY 12207 Tel: (518) 257-3000 Skanska (646) 548-1950	DASNY 515 Broadway Albany, NY 12207 Tel: (518) 257-3000 TDX (212) 939-1201	DASNY 515 Broadway Albany, NY 12207 Tel: (518) 257-3000 Turner (212) 245-3216 x106
Name & Location of Project	Harlem Hospital - Superstructure New York, NY	CUNY - CCNY New York, NY	Harlem Hospital New York, NY	John Jay College New York, NY
Surety	Chubb	Chubb	Chubb	Chubb
Description	Superstructure Concrete	Earthwork & Rock Excavation	Earthwork & Excavation, Site Clearing & Grubbing, Concrete Foundation, Grade Beams, Sheeting, Shoring, Underpinning Traffic Control, DeWatering, Noise & Dust Mitigation, Fencing, Waterproofing	Superstructure Concrete
Start Date	Sep-09	Sep-08	Sep-08	Nov-08
Completion Date	Jan-12	Mar-12	Mar-12	Mar-12
Contract Amount	3,150,000	19,264,158	10,494,800	14,222,722
Supervisor	Angelos Regis	Michael Franco	Thomas Tilleli	Anthony Gervaise

Prime Contractor / Owner	Leon DeMatteis Construction 820 Elmont Road Elmont, NY 11003 Tel: (516) 285-5580 Fax: (516) 285-8248	Bovis Lend Lease 200 Park Ave New York, NY Tel: (212) 592-6700 Fax: (212) 592-6988	Avalon Bay Communities 275 7th Ave - 25th Fl New York, NY 10001 Tel: (718) 222-5290 Fax: (212) 370-1415	Bovis Lend Lease 200 Park Ave New York, NY Tel: (212) 592-6700 Fax: (212) 592-6988
Name & Location of Project	Mott Haven Campus Bronx, NY	Monroe High School Bronx, NY	Avalon Gold Street Brooklyn, NY	One Madison Park - Phase 3 New York, NY
Surety	Chubb	Chubb	Chubb	Chubb
Description	Concrete Slab & Metal Deck Concrete Roof & Floor Fills Sitework Sidewalks, Curbs, Retaining Walls	Sitework Sidewalks, Curbs, Retaining Walls	Earthwork & Excavation, Site Clearing & Grubbing, Concrete Foundation, Grade Beams, Sheeting, Shoring, Underpinning Traffic Control, DeWatering, Noise & Dust Mitigation, Fencing, Waterproofing, Concrete Button SOE Wall	Earthwork & Excavation, Site Clearing & Grubbing, Concrete Foundation, Grade Beams, Sheeting, Shoring, Underpinning Traffic Control, DeWatering, Noise & Dust Mitigation, Fencing, Waterproofing
Start Date	Aug-08	Jun-08	Dec-07	Oct-07
Completion Date	Mar-12	Dec-08	Dec-08	Aug-09
Contract Amount	7,000,000	775,000	10,400,000	3,645,000
Supervisor	Fred Abbate	Robert Benzinger	Andrew Baranello	Andy Yang

Prime Contractor / Owner	Bovis Lend Lease 200 Park Ave New York, NY Tel: (212) 592-6700 Fax: (212) 592-6988	Bovis Lend Lease 200 Park Ave New York, NY Tel: (212) 592-6700 Fax: (212) 592-6988	DASNY 515 Broadway Albany, NY 12207 Tel: (518) 257-3000 McKissack/Turner (718) 467-0340	Bovis Lend Lease 200 Park Ave New York, NY Tel: (212) 592-6700 Fax: (212) 592-6988
Name & Location of Project	One Madison Park - Phase 2 New York, NY	Former Queens Family Courthouse Queens, NY	Medgar Evers College Brooklyn, NY	150 Amsterdam Ave New York, NY
Surety	Chubb	Chubb	Chubb	Chubb
Description	Earthwork & Excavation, Site Clearing & Grubbing, Concrete Foundation, Grade Beams, Sheeting, Shoring, Underpinning Traffic Control, DeWatering, Noise & Dust Mitigation, Fencing, Waterproofing	Earthwork & Excavation, Site Clearing & Grubbing, Concrete Foundation, Grade Beams, Sheeting, Shoring, Underpinning Traffic Control, DeWatering, Noise & Dust Mitigation, Fencing, Waterproofing	Superstructure Concrete	Earthwork & Excavation, Site Clearing & Grubbing, Concrete Foundation, Grade Beams, Sheeting, Shoring, Underpinning Traffic Control, DeWatering, Noise & Dust Mitigation, Fencing, Waterproofing
Start Date	Oct-07	Oct-07	Nov-07	Nov-07
Completion Date	Aug-09	May-10	Dec-08	Dec-08
Contract Amount	955,000	13,400,000	3,508,914	9,150,000
Supervisor	Andy Yang	John Moore	Albert Odjidja	Gerald Bianco

Prime Contractor / Owner	Leon DeMatteis Construction 820 Elmont Road Elmont, NY 11003 Tel: (516) 285-5580 Fax: (516) 285-8248	Monadnock Construction, Inc. 155 - 3rd Street Brooklyn, NY 11231 Tel: (718) 875-8160 Fax: (718) 802-1109	Avalon Bay Communities 275 7th Ave - 25th Floor New York, NY 10001 Tel: (212) 370-9269 Fax: (212) 370-1511	Monadnock Construction, Inc. 155 - 3rd Street Brooklyn, NY 11231 Tel: (718) 875-8160 Fax: (718) 802-1109
Name & Location of Project	Mott Haven Campus Bronx, NY	Harrison Condos New York, NY	Avalon Morningside Park NY, NY	Monterey Apts. Bronx, NY
Surety	Chubb	Chubb	Chubb	Chubb
Description	Earthwork & Excavation, Site Clearing & Grubbing, Concrete Foundation, Grade Beams, Sheeting, Shoring, Underpinning Traffic Control, DeWatering, Noise & Dust Mitigation, Fencing, Waterproofing	Earthwork & Excavation, Site Clearing & Grubbing, Concrete Foundation, Grade Beams, Sheeting, Shoring, Underpinning Traffic Control, DeWatering, Noise & Dust Mitigation, Fencing, Waterproofing	Earthwork & Excavation, Site Clearing & Grubbing, Concrete Foundation, Grade Beams, Sheeting, Shoring, Underpinning Traffic Control, DeWatering, Noise & Dust Mitigation, Fencing, Waterproofing	Earthwork & Excavation, Site Clearing & Grubbing, Concrete Foundation, Grade Beams, Sheeting, Shoring, Underpinning Traffic Control, DeWatering, Noise & Dust Mitigation, Fencing, Waterproofing
Start Date	Jul-07	May-07	Mar-07	Jan-07
Completion Date	Mar-12	Nov-08	Nov-08	Feb-08
Contract Amount	6,800,000	7,925,000	7,900,000	1,130,000
Supervisor	Fred Abbate	Paul Colapinto	Albert Hromin	Bob Wieda

Prime Contractor / Owner	Army Corp. of Engineer 26 Federal Plaza New York, NY 10278 Tel: (212) 264-0238 Fax: (212) 264-3013	Department of Sanitation 44 Beaver Street New York, NY 10004 Tel: (718) 761-5976 Fax: (718) 761-0286	Bovis Lend Lease 200 Park Ave New York, NY Tel: (212) 592-6700 Fax: (212) 592-6988	DASNY 515 Broadway Albany, NY 12207 Tel: (518) 257-3000 LiRo (212) 368-9038
Name & Location of Project	Arthur Kill Mitigation (BUG) Staten Island, NY	FreshKills Wetlands Staten Island, NY	Monroe High School Bronx, NY	CCNY School of Architecture New York, NY
Surety	St. Paul's Travelers	St. Paul	Chubb	St. Paul's Travelers
Description	Earthwork & Excavation Landscaping Site Work	Earthwork & Excavation Landscaping Site Work	Earthwork & Excavation Concrete Foundation Concrete Slab & SuperStructure DeWatering	Concrete Rehabilitation to Existing Structure Reinforced Concrete Rock Excavation
Start Date	Dec-05	Oct-04	Oct-06	Apr-06
Completion Date	Sep-08	Aug-07	Dec-07	Dec-07
Contract Amount	5,345,070	2,044,827	5,359,200	6,888,827
Supervisor	Mark Kucera	Bernard Weinberger	Robert Benzinger	Ralph Tilleli

Prime Contractor / Owner	AMCC 50-18 Vernon Blvd Long Island City, NY 11101 Tel: (718) 472-9500 Fax: (718) 472-2250	Monadnock Construction, Inc. 155 - 3rd Street Brooklyn, NY 11231 Tel: (718) 875-8160 Fax: (718) 802-1109	Leon DeMatteis Construction 820 Elmont Road Elmont, NY 11003 Tel: (516) 285-5580 Fax: (516) 285-8248	Touro College 27-33 West 23rd St. New York, NY 10010 Tel: (212) 463-0400 Fax: (212) 627-9047
Name & Location of Project	Brooklyn College Brooklyn, NY	319 East 21st St New York, NY	IS/HS43 Staten Island, NY	Touro College Corona, NY
Surety	Chubb	None	None	St. Paul's Travelers
Description	Earthwork, Excavation Concrete Foundation Concrete Slab & Metal Deck Concrete Roof & Floor Fills DeWatering, Sitework	Earthwork & Excavation Rock Excavation	Earthwork, Excavation Concrete Foundation Concrete Slab & Metal Deck Modular Block Retaining Walls, DeWatering, Sitework Sidewalks, Curbs, Retaining Walls	Earthwork, Excavation Concrete Foundation Concrete Slab & Metal Deck Concrete Roof & Floor Fills DeWatering, Sitework
Start Date	Mar-06	Jan-06	Oct-06	Sep-05
Completion Date	Aug-08	Jul-06	Sep-08	Nov-07
Contract Amount	8,200,000	801,400	10,452,081	3,350,000
Supervisor	Charles Marino	William Walsh	Joseph Spallina	Larry Pesce

Prime Contractor / Owner	DASNY 515 Broadway Albany, NY 12207 Tel: (518) 257-3000 Tel: (718) 953-3008	NYC SCA 30-30 Thomson Ave Long Island City, NY 11101 Tel: (718) 472-8000 Fax: (718) 472-8590	Monadnock Construction, Inc. 155 - 3rd Street Brooklyn, NY 11231 Tel: (718) 875-8160 Fax: (718) 802-1109	Bovis Lend Lease 200 Park Ave New York, NY Tel: (212) 592-6700 Fax: (212) 592-6988
Name & Location of Project	Kings County Hospital Center Brooklyn, NY	IS 318 Brooklyn, NY	Encore West Residence New York, NY	Office of Emergency Management Brooklyn, NY
Surety	St. Paul's Travelers	St. Paul's Travelers	None	St. Paul's Travelers
Description	Earthwork, Excavation Concrete Foundation Concrete Slab & Metal Deck Concrete Roof & Floor Fills DeWatering, Sitework	Earthwork & Excavation Foundation Repair New Gymnasium Floor Site Work	Earthwork & Excavation Concrete Foundation Concrete Slab Site Work	Earthwork & Excavation Concrete Foundation Concrete Slab & SuperStructure DeWatering
Start Date	Jun-05	Jun-05	Jan-05	Nov-04
Completion Date	Aug-07	Sep-08	Oct-07	Dec-05
Contract Amount	3,207,340	1,770,500	821,914	1,034,229
Supervisor	Dominick Tucciarone	Dilcia Delacuesta	Bob Wieda	David Wong

Prime Contractor / Owner	Denali Construction 6833 Shore Road Brooklyn, NY 11220 Tel: (718) 765-1651 Fax: (718) 765-1655	T.A. Ahern Contractors Corp. 69-24 49th Ave Woodside, NY 11377 Tel: (718) 639-5880 Fax: (718) 476-1979	Monadnock Construction, Inc. 155 - 3rd Street Brooklyn, NY 11231 Tel: (718) 875-8160 Fax: (718) 802-1109	Monadnock Construction, Inc. 155 - 3rd Street Brooklyn, NY 11231 Tel: (718) 875-8160 Fax: (718) 802-1109
Name & Location of Project	Metropolitian Ave Queens, NY	Bellevue Hospital New York, NY	Roosevelt Island Building #3 New York, NY	Cabrini Senior Housing New York, NY
Surety	None	St. Paul	St. Paul	None
Description	Earthwork, Excavation, Concrete Foundation Concrete Slab DeWatering Superstructure	Super Structure Concrete	Earthwork & Excavation Concrete Foundation Concrete Slab Site Work	Earthwork & Excavation Concrete Foundation Concrete Slab Site Work
Start Date	Jul-03	Aug-04	Aug-04	Mar-04
Completion Date	Mar-05	Mar-07	Mar-05	Nov-05
Contract Amount	4,350,000	5,587,439	1,500,000	545,000
Supervisor	Joseph Scarpinito	Ken Lebeck	Greg Bauso	Bob Wieda

Prime Contractor / Owner	Quantum Construction Group 390 5th Ave Suite 611 New York, NY 10018 Tel: (212) 564-3657 Fax: (212) 564-3658	Monadnock Construction, Inc. 155 - 3rd Street Brooklyn, NY 11231 Tel: (718) 875-8160 Fax: (718) 802-1109	Monadnock Construction, Inc. 155 - 3rd Street Brooklyn, NY 11231 Tel: (718) 875-8160 Fax: (718) 802-1109	Denali Construction 6833 Shore Road Brooklyn, NY 11220 Tel: (718) 765-1651 Fax: (718) 765-1655
Name & Location of Project	The Victoria Towers Flushing, NY	Clinton Parkview Apartments New York, NY	Stadium Court Bronx, NY	Oxford Ave Construction Bronx, NY
Surety	None	None	None	None
Description	Earthwork & Excavation Concrete Foundation Concrete Slab Site Work	Earthwork & Excavation Concrete Foundation Concrete Slab Site Work	Earthwork & Excavation Concrete Foundation Concrete Slab Site Work	Earthwork, Excavation, Concrete Foundation Concrete Slab DeWatering Superstructure
Start Date	Feb-04	Oct-03	Sep-03	Jul-03
Completion Date	Oct-05	Dec-05	Jun-04	Jan-04
Contract Amount	2,700,000	800,000	691,860	2,850,000
Supervisor	James Murphy	Bob Wieda	Anthony Zarrella	Joseph Scarpinito

Prime Contractor / Owner	P&K Contracting, Inc. 225 Jericho Turnpike Floral Park, NY 11001 Tel: (516) 775-5659 Fax: (516) 775-0399	BNG Construction Inc. 14-44 30th Road Long Island City, NY 11102 Tel: (718) 956-6325 Fax: (718) 956-4511	Barbaro Construction Company 325 38th Street Brooklyn, NY 11232 Tel: (718) 768-0916 Fax: (718) 768-2956	Monadnock Construction, Inc. 155 - 3rd Street Brooklyn, NY 11231 Tel: (718) 875-8160 Fax: (718) 802-1109
Name & Location of Project	PS 58 Mitigation Staten Island, NY	PS 1 Staten Island, NY	St. John's University Staten Island, NY	St. Teresa of Avila Brooklyn, NY
Surety	None	None	St. Paul	None
Description	Earthwork & Excavation Landscaping Site Work	Earthwork & Excavation Concrete Foundation Concrete Slab & SuperStructure DeWatering	Earthwork & Excavation Concrete Foundation Concrete Slab & SuperStructure DeWatering Site Work	Earthwork & Excavation Concrete Foundation Concrete Slab Site Work
Start Date	Jul-03	Jun-03	May-03	Jan-03
Completion Date	Mar-05	Sep-04	Sep-04	Jul-04
Contract Amount	1,400,000	114,914	695,000	375,000
Supervisor	Raj Patel	Mamie Lum	Edward Barbaro	Bob Wieda

Prime Contractor / Owner	Denali Construction 6833 Shore Road Brooklyn, NY 11220 Tel: (718) 765-1651 Fax: (718) 765-1655	Monadnock Construction, Inc. 155 - 3rd Street Brooklyn, NY 11231 Tel: (718) 875-8160 Fax: (718) 802-1109	Gottlieb Skanska 20 North Central Avenue Valley Stream, NY 11580 Tel: (516) 872-5700 Fax: (516) 872-0894	Monadnock Construction, Inc. 155 - 3rd Street Brooklyn, NY 11231 Tel: (718) 875-8160 Fax: (718) 802-1109
Name & Location of Project	La Vistas Brooklyn, NY	Nehemiah Phase 9 & 10 Brooklyn, NY	PS 499 Flushing, NY	Atlantic Center Phase III Brooklyn, NY
Surety	None	None	St. Paul	None
Description	Earthwork, Excavation, Concrete Foundation Concrete Slab & SuperStructure Beam Encasement & Patching DeWatering Site Work	Clearing and Grubbing Earthwork, Excavation & Sitework	Earthwork, Excavation, Concrete Foundation Concrete Slab Beam Encasement & Patching DeWatering Site Work	Earthwork & Excavation Concrete Foundation Concrete Slab Site Work
Start Date	Nov-02	Aug-02	Apr-02	Feb-02
Completion Date	Jun-03	Jan-04	Dec-04	Nov-02
Contract Amount	2,975,000	817,638	3,750,000	1,590,000
Supervisor	Joseph Scarpinito	George Mihalis	Nicholas Vutucci	Paul Colapinto

Prime Contractor / Owner	Leon DeMatteis Construction 820 Elmont Road Elmont, NY 11003 Tel: (516) 285-5580 Fax: (516) 285-8248	Monadnock Construction, Inc. 155 - 3rd Street Brooklyn, NY 11231 Tel: (718) 875-8160 Fax: (718) 802-1109	Leon DeMatteis Construction 820 Elmont Road Elmont, NY 11003 Tel: (516) 285-5580 Fax: (516) 285-8248	Monadnock Construction, Inc. 155 - 3rd Street Brooklyn, NY 11231 Tel: (718) 875-8160 Fax: (718) 802-1109
Name & Location of Project	PS 194 Bronx, NY	Bayview Housing Brooklyn, NY	PS 58 Staten Island, NY	Roosevelt Island New York, NY
Surety	None	None	St. Paul	None
Description	Earthwork, Excavation, Concrete Foundation Concrete Slab & Metal Deck Concrete Roof & Floor Fills Beam Encasement & Patching DeWatering Sitework	Earthwork & Excavation Concrete Foundation Concrete Slab Site Work	Earthwork, Excavation, Concrete Foundation Concrete Slab & Metal Deck Concrete Roof & Floor Fills Beam Encasement & Patching DeWatering, Rock Anchors Waterproofing & Sitework	Clearing and Grubbing Earthwork, Excavation & Sitework
Start Date	Jul-01	Aug-01	Dec-01	Jun-01
Completion Date	Feb-04	Oct-02	Sep-04	Mar-03
Contract Amount	4,900,000	1,175,000	5,600,000	385,000
Supervisor	Ben Mena	George Mihalis	Joseph Spallina	Gregg Bauso

Prime Contractor / Owner	Monadnock Construction, Inc. 155 - 3rd Street Brooklyn, NY 11231 Tel: (718) 875-8160 Fax: (718) 802-1109	WVC Development Co. 197 Spring Street Staten Island, NY 10304 Tel: (718) 987-6480 Fax: (718) 477-3720	Monadnock Construction, Inc. 155 - 3rd Street Brooklyn, NY 11231 Tel: (718) 875-8160 Fax: (718) 802-1109	HHCM Design Associates, Inc. 280 Elm Street Suite 100 Southampton, NY 11968 Tel: (631) 283-5540 Fax: (631) 283-5583
Name & Location of Project	Nehemiah Phase VIB, 7 & 8 Brooklyn, NY	ADCO Headquarters Staten Island, NY	Clinton Development New York, NY	Pace Wildenstein Museum New York, NY
Surety	None	None	None	None
Description	Clearing and Grubbing Earthwork, Excavation & Sitework	Earthwork, Excavation, Concrete Foundation Concrete Slab & Metal Deck Concrete Roof & Floor Fills Beam Encasement & Patching Site Work	Earthwork & Excavation Concrete Foundation Concrete Slab Beam Encasement & Patching Site Work	Earthwork & Excavation Concrete Slab & Metal Deck Multiple Phases Site Work
Start Date	May-01	Aug-01	Nov-01	Jan-01
Completion Date	Mar-02	Apr-03	Oct-04	Apr-01
Contract Amount	650,000	1,150,000	750,827	76,000
Supervisor	Fred McCasky	William Conte	Sean Ennis	Vincent Galardi

Prime Contractor / Owner	Nicotra Group, Inc. 1000 South Avenue Staten Island, NY 10314 Tel: (718) 477-2100 Fax: (718) 494-8776	Two Trees Management Co. 25 Washington Street 3rd Floor Brooklyn, NY 11201 Tel: (718) 222-2500 Fax: (718) 222-2501	Nicotra Group, Inc. 1000 South Avenue Staten Island, NY 10314 Tel: (718) 477-2100 Fax: (718) 494-8776	Breeze National, Inc. 2620 West 13th Street Brooklyn, NY 11223 Tel: (718) 266-7336 Fax: (718) 266-9015
Name & Location of Project	Garden's Office Staten Island, NY	Gair 5 Parking Garage Brooklyn, NY	Hilton Hotel Staten Island, NY	Museum of Modern Art New York, NY
Surety	None	None	None	None
Description	Concrete Foundation Concrete Slab & Metal Deck Concrete Roof & Floor Fills Beam Encasement & Patching Multiple Phases Site Work	Concrete Foundation Concrete Slab & Metal Deck Beam Encasement & Patching Site Work	Concrete Foundation Concrete Slab & Metal Deck Concrete Roof & Floor Fills Beam Encasement & Patching Multiple Phases Site Work	Concrete Foundation Concrete Slab & Metal Deck Beam Encasement & Patching Multiple Phases Site Work
Start Date	Oct-00	Jun-00	Aug-00	Oct-00
Completion Date	Jan-02	Dec-00	Sep-01	Apr-01
Contract Amount	750,000	525,000	821,714	160,629
Supervisor	John Caltibiano	Jed Walentas	John Caltibiano	Dyal Ramcharan

Prime Contractor / Owner	Monadnock Construction, Inc. 155 - 3rd Street Brooklyn, NY 11231 Tel: (718) 875-8160 Fax: (718) 802-1109	Breeze National, Inc. 2620 West 13th Street Brooklyn, NY 11223 Tel: (718) 266-7336 Fax: (718) 266-9015	Monadnock Construction, Inc. 155 - 3rd Street Brooklyn, NY 11231 Tel: (718) 875-8160 Fax: (718) 802-1109	Monadnock Construction, Inc. 155 - 3rd Street Brooklyn, NY 11231 Tel: (718) 875-8160 Fax: (718) 802-1109
Name & Location of Project	Castleton Manor Senior Housing Staten Island, NY	Seward Park Housing New York, NY	Southside Housing Brooklyn, NY	Crossroads New York, NY
Surety	None	None	None	None
Description	Earthwork & Excavation Concrete Foundation Concrete Slab Beam Encasement & Patching Site Work	Concrete Foundation Concrete Slab & Metal Deck Beam Encasement & Patching	Earthwork & Excavation Concrete Foundation Concrete Slab Multiple Phases Site Work	Earthwork & Excavation Concrete Foundation Concrete Slab Multiple Phases
Start Date	May-00	Aug-00	May-00	Jun-99
Completion Date	Mar-01	Jan-01	Apr-02	Jan-01
Contract Amount	530,777	265,310	1,837,918	188,536
Supervisor	Gregg Bauso	Dyal Ramcharan	Fred McCasky	Gregg Bauso

Prime Contractor / Owner	Monadnock Construction, Inc. 155 - 3rd Street Brooklyn, NY 11231 Tel: (718) 875-8160 Fax: (718) 802-1109	Monadnock Construction, Inc. 155 - 3rd Street Brooklyn, NY 11231 Tel: (718) 875-8160 Fax: (718) 802-1109	Mackroyce Dismantling, Ltd. 242 Nevins Street Brooklyn, NY 11217 Tel: (718) 852-5800 Fax: (718) 858-5874	Monadnock Construction, Inc. 155 - 3rd Street Brooklyn, NY 11231 Tel: (718) 875-8160 Fax: (718) 802-1109
Name & Location of Project	Nehemiah Phase VB Brooklyn, NY	Nehemiah Phase IV Brooklyn, NY	Queens Family Court House Jamaica, NY	Nehemiah Phase VA Brooklyn, NY
Surety	None	None	AXA Global Risks US Ins. Co.	None
Description	Clearing and Grubbing Earthwork, Excavation & Sitework	Clearing and Grubbing Earthwork, Excavation & Sitework	Concrete Foundation Beam Encasement & Patching	Clearing and Grubbing Earthwork, Excavation & Sitework
Start Date	Dec-99	Apr-99	Jun-99	Aug-99
Completion Date	Oct-00	Jan-00	Aug-00	Mar-00
Contract Amount	495,450	329,885	1,102,000	135,478
Supervisor	Fred McCasky	Fred McCasky	John Belsito	Fred McCasky

Prime Contractor / Owner	Storage USA 25 Lindsley Drive Suite 101 Morristown, NJ 07960 Tel: (973) 401-0505 Fax: (973) 401-0506	Monadnock Construction, Inc. 155 - 3rd Street Brooklyn, NY 11231 Tel: (718) 875-8160 Fax: (718) 802-1109	Halpern Construction Corp. 410 Saw Mill River Road Ardsley, NY 10502 Tel: (914) 674-0800 Fax: (914) 674-9670	Delight Construction Corp. 1360 Fulton Street Brooklyn, NY 11216 Tel: (718) 399-8300 Fax: (718) 399-0122
Name & Location of Project	7 Arden Avenue Staten Island, NY	Ellery Court Senior Housing Brooklyn, NY	West 18th Street Apartments New York, NY	Interfaith Medical Center Brooklyn, NY
Surety	None	None	None	None
Description	Clearing and Grubbing Earthwork, Excavation & Sitework Multiple Phases Site Work	Earthwork & Excavation Concrete Foundation Concrete Slab Site Work	Earthwork & Excavation Concrete Foundation Concrete Slab	Earthwork & Excavation Concrete Foundation Concrete Slab & Metal Deck Beam Encasement & Patching Site Work
Start Date	Nov-98	Jul-99	Aug-99	Aug-99
Completion Date	Dec-00	Apr-00	Nov-99	Sep-00
Contract Amount	458,751	477,201	610,389	370,000
Supervisor	Vincent D'Antoni	Peter Hansen	Hyman Rostoker	Mohammad Aziz

Prime Contractor / Owner	Breeze National, Inc. 2620 West 13th Street Brooklyn, NY 11223 Tel: (718) 266-7336 Fax: (718) 266-9015	Monadnock Construction, Inc. 155 - 3rd Street Brooklyn, NY 11231 Tel: (718) 875-8160 Fax: (718) 802-1109	Halpern Construction Corp. 410 Saw Mill River Road Ardsley, NY 10502 Tel: (914) 674-0800 Fax: (914) 674-9670	Monadnock Construction, Inc. 155 - 3rd Street Brooklyn, NY 11231 Tel: (718) 875-8160 Fax: (718) 802-1109
Name & Location of Project	Regal Cinemas Staten Island, NY	Fulton Ralph Brooklyn, NY	Savoy Senior Housing Little Neck, NY	Nehemiah Phase III Brooklyn, NY
Surety	None	None	None	None
Description	Earthwork & Excavation Concrete Foundation Concrete Slab & Metal Deck Beam Encasement & Patching Site Work	Earthwork, Excavation & Sitework	Earthwork & Excavation Concrete Foundation Concrete Slab Beam Encasement & Patching	Clearing and Grubbing Earthwork, Excavation & Sitework
Start Date	Dec-99	Jul-98	Aug-99	Jun-98
Completion Date	Sep-00	Apr-99	Dec-99	Apr-99
Contract Amount	1,140,000	209,616	203,000	397,569
Supervisor	Dyal Ramcharan	Paul Alba	Hyman Rostoker	Fred McCasky

Prime Contractor / Owner	Monadnock Construction, Inc. 155 - 3rd Street Brooklyn, NY 11231 Tel: (718) 875-8160 Fax: (718) 802-1109	Monadnock Construction, Inc. 155 - 3rd Street Brooklyn, NY 11231 Tel: (718) 875-8160 Fax: (718) 802-1109	Atlas Concrete Construction 80 Davids Drive Hauppauge, NY 11788 Tel: (516) 435-8100 Fax: (516) 435-8605	Atlas Concrete Construction 80 Davids Drive Hauppauge, NY 11788 Tel: (516) 435-8100 Fax: (516) 435-8605
Name & Location of Project	Casella Plaza Brooklyn, NY	Saratoga VII Brooklyn, NY	St. Pius Brooklyn, NY	Cambridge House on the Bay Brooklyn, NY
Surety	None	None	None	None
Description	Earthwork, Excavation & Sitework	Earthwork & Excavation Concrete Foundation Concrete Slab Beam Encasement & Patching	Earthwork, Excavation & Sitework	Earthwork & Excavation Concrete Foundation Concrete Slab
Start Date	Jul-98	Jan-99	Sep-98	Jan-99
Completion Date	Sep-99	Dec-99	Oct-99	Dec-99
Contract Amount	379,760	1,584,778	185,600	426,000
Supervisor	Gregg Bauso	Peter Hansen	Ken Padover	Ken Padover

Prime Contractor / Owner	Monadnock Construction, Inc. 155 - 3rd Street Brooklyn, NY 11231 Tel: (718) 875-8160 Fax: (718) 802-1109	Monadnock Construction, Inc. 155 - 3rd Street Brooklyn, NY 11231 Tel: (718) 875-8160 Fax: (718) 802-1109
Name & Location of Project	Nehemiah Phase II Brooklyn, NY	Seview Manor Apts. Staten Island, NY
Surety	None	None
Description	Earthwork, Excavation & Sitework	Earthwork, Excavation & Sitework
Start Date	Aug-97	Jan-97
Completion Date	Sep-98	Aug-98
Contract Amount	859,967	571,591
Supervisor	Fred McCasky	Gregg Bauso

J. Pizzirusso Landscaping Corp DBA JPL INDUSTRIES (Jobs as Prime Contractor)

	Contract #	Description	Year of Award	Agency	Percent Complete	Comptroller #	Contract Amount
1	BG-804M	Planting of New & Replacement Street Trees	2004	NYCDPR	100%	20050016990	$ 544,000.00
2	BG-104M	Planting of New & Replacement Street Trees	2004	NYCDPR	100%	20050017287	$ 287,297.00
3	CNYG-3005M	Construction of Green Streets	2005	NYCDPR	100%	20060017893	$ 250,000.00
4	BG-605M	Planting of New & Replacement Street Trees	2005	NYCDPR	100%	20050030571	$ 462,000.00
5	QG-505M	Planting of New & Replacement Street Trees	2005	NYCDPR	100%	20050034934	$ 626,000.00
6	BG-804MR	Planting of New & Replacement Street Trees	2005	NYCDPR	100%	20060019027	$ 400,000.00
7	QG-505MR	Planting of New & Replacement Street Trees	2006	NYCDPR	100%	20060034429	$ 674,000.00
8	BG-605MR	Planting of New & Replacement Street Trees	2006	NYCDPR	100%	20060037821	$ 563,000.00
9	BG-306M	Planting of New & Replacement Street Trees	2006	NYCDPR	100%	20070013063	$ 738,000.00
10	QG-606M	Planting of New & Replacement Street Trees	2006	NYCDPR	100%	20070018729	$ 453,000.00
11	CNYG-3005MR	Construction of Green Streets	2006	NYCDPR	100%	20070020526	$ 450,000.00
12	CNYG-507M	Planting of New & Replacement Street Trees	2007	NYCDPR	100%	20070035596	$ 575,000.00
13	CNYG-407M	Planting of New & Replacement Street Trees	2007	NYCDPR	100%	20070036600	$ 575,000.00
14	QG-207M	Planting of New & Replacement Street Trees	2007	NYCDPR	100%	20070037195	$ 425,000.00
15	CNYG-2906M	Construction of Green Streets	2007	NYCDPR	100%	20070037864	$ 895,000.00
16	QG-1007M	Planting of New & Replacement Street Trees	2007	NYCDPR	100%	20080015412	$ 1,050,000.00
17	QG-606MR	Planting of New & Replacement Street Trees	2007	NYCDPR	100%	20080015701	$ 850,000.00
18	QG-207MR	Planting of New & Replacement Street Trees	2008	NYCDPR	100%	20080028942	$ 490,000.00
19	CNYG-2906MR	Construction of Green Streets	2008	NYCDPR	100%	20080030071	$ 1,095,000.00
20	QG-1007MR	Planting of New & Replacement Street Trees	2008	NYCDPR	100%	20080033330	$ 1,700,000.00
21	RG-108M	Planting of New & Replacement Street Trees	2008	NYCDPR	100%	20080033802	$ 1,250,000.00
22	MG-408M	Planting of New & Replacement Street Trees	2008	NYCDPR	100%	20090005334	$ 187,500.00
23	BG-1708M	Planting of New & Replacement Street Trees	2008	NYCDPR	100%	20090007438	$ 910,000.00
24	QG-2308M	Planting of New & Replacement Street Trees	2008	NYCDPR	100%	20090011787	$ 721,000.00
25	QG-2108M	Planting of New & Replacement Street Trees	2008	NYCDPR	100%	20090011844	$ 950,000.00
26	XG-809M	Planting of New & Replacement Street Trees	2009	NYCDPR	100%	20090029100	$ 1,239,000.00
27	RG-709M	Planting of New & Replacement Street Trees	2009	NYCDPR	100%	20090029492	$ 1,701,000.00
28	BG-1109M	Planting of New & Replacement Street Trees	2009	NYCDPR	100%	20090029891	$ 1,729,000.00
29	BG-909M	Planting of New & Replacement Street Trees	2009	NYCDPR	100%	20090030216	$ 800,000.00
30	QG-2709M	Planting of New & Replacement Street Trees	2009	NYCDPR	100%	20100015386	$ 605,000.00
31	CNYG-2609M	Planting of New & Replacement Street Trees	2010	NYCDPR	100%	20101401745	$ 847,000.00
32	CNYG-5009M	Construct Storm Water Capture Greenstreets	2010	NYCDPR	100%	20101403241	$ 1,818,000.00

	Contract #	Description	Year of Award	Agency	Percent Complete	Comptroller #	Contract Amount
33	BG-210MA	Reconctruction of Plaza- Lafayette Street, Brooklyn	2012	NYCDPR	100%	20121440652	$ 737,000.00
34	GK26W03-1	ROWB Demo Area 2	2012	DEP	100%	2021442033	$ 896,200.00
35	GKNC15-05	ROWB Demo Area 3	2012	DEP	100%	20131408316	$ 508,150.00
36	Q021-109M	Reconstruction of Cunningham Park	2012	NYCDPR	100%	20121441209	$ 1,700,000.00
37	B065-112M	Ocean Parkway Malls- Brooklyn	2013	NYCDPR	100%	20131421377	$ 1,250,000.00
38	BG-212M	Ocean Parkway Malls- Brooklyn	2014	NYCDPR	100%	2014140456	$ 2,100,000.00
39	Q015-210M	Reconstruction of Forest Park- Queens	2012	NYCDPR	100%	20121442766	$ 600,000.00
40	CNYG-512M	Construction of Green Infrastructure - Citywide	2013	NYCDPR	100%	20121440850	$ 2,800,000.00
41	CNYG-1013M	Construction of Green Infrastructure - Citywide	2013	NYCDPR	100%	20141415393	$ 2,841,000.00
42	BG-1013M	Construction of Green Infrastructure - Citywide	2013	NYCDPR	100%	20141413520	$ 2,060,000.00
43	B073-211M	Reconstruct Paths & Ballfields in Prospect Pk.	2013	NYCDPR	100%	2041403516	$ 916,874.00
44	QG-214M	Planting of Street Trees - Queens	2014	NYCDPR	100%	20151403872	$ 2,450,000.00
45	BG-315M	Planting of Street Trees - Brooklyn	2015	NYCDPR	100%	20141413520	$ 1,770,000.00
46	CNYG-414M	Planting of Street Trees - Citywide	2015	NYCDPR	100%	2015422517-1	$ 2,650,000.00
47	Q015-113M	Reconstruction of Forest Park- Queens	2015	NYCDPR	100%	20151414522	$ 1,313,560.00
48	Q020-111M	Reconstruction of Ballfields- Highland Pk. Queens	2015	NYCDPR	100%	20151407249	$ 2,594,360.00
49	GKNC1501	Right of way Bioswales - Brooklyn	2015	Liro/EDC	100%	N/A	$ 4,739,505.00
50	GK26W3-03	Right of way Bioswales - Brooklyn	2015	HR/EDC	100%	N/A	$ 4,132,284.00
51	QG-813M	Right of way Bioswales - Queens	2015	NYCDPR	100%	20141417191	$ 2,658,000.00
52	B073-214M	Reconstruction of Ballfields- Prospect Pk. Brooklyn	2016	NYCDPR	100%	20161418031	$ 2,086,704.00
53	BG-1315M	Planting of Street Trees - Brooklyn	2016	NYCDPR	100%	20161413922	$ 1,800,000.00
54	BG-1215M	Planting of Street Trees - Brooklyn	2016	NYCDPR	100%	20161414075	$ 1,800,000.00
55	HWPEDSF1	School Safety Routes @ 31st Street & Broadway, Queens	2016	NYCDDC	100%	20161417326	$ 2,130,068.00
56	HWPLZ009K	Reconstruction of New Lots Triangle- Brooklyn	2016	NYCDDC	100%	20161422876	$ 2,667,626.00
57	X274-113M	Reconstruction of Retaining Walls & Site Mt. Hope Park	2016	NYCDPR	100%	20171403991	$ 3,761,639.01
58	R035-115M	Reconstruction of DeMatti Playground- Staten Island	2016	NYCDPR	100%	20161429777	$ 5,105,370.00
59	BG-116M	Planting of Street Trees - Brooklyn	2017	NYCDPR	100%	20181406773	$ 2,900,000.00
60	GQBB09-01	Right of Way Bioswales- Queens	2017	NYCDDC	100%	20161429838	$ 9,110,000.00
61	D004898	Roberto Clemente State Park- Lower Plaza Reconstruction	2017	NYSPRHP	100%	N/A	$ 5,100,000.00
62	B057-114M	Reconstruction of Dr. John's Playground, Brooklyn	2017	NYCDPR	100%	20171409895	$ 2,681,600.00
63	GQBB06-03-1	Right of way Bioswales -Queens	2017	NYCDEP	100%	2017146974	$ 9,707,000.00
64	SECBRPQ10-R	Installation of New Catch Basins - Citywide	2017	NYCDDC	100%	20181405056	$ 5,160,000.00
65	HWBUSPAD6	Installation or Replacement of Bus Pads Citywide	2017	NYCDDC	100%	20181400711	$ 3,204,632.00
66	XG32250313MA	Right of way Bioswales- Greenstreets, The Bronx	2017	NYCDPR	0%	Cancelled	$ -
67	BG-518M	Planting of Street Trees - Brooklyn	2018	NYCDPR	100%	20181427541	$ 1,700,000.00
68	SANDHW15	Reconstruction of Father Capodanno Blvd. - Midland Beach	2018	NYCDDC	100%	20181412527	$ 6,445,703.00
69	SANDHW14	Reconstruction of Father Capodanno Blvd. - South Beach	2018	NYCDDC	100%	20181420093	$ 18,180,900.00

	Contract #	Description	Year of Award	Agency	Percent Complete	Comptroller #	Contract Amount
70	B429-116M	Reconstruction of The Ballfield, Playground, Sitting area and Perimeter Sidewalks at Hope Ballfield, Located on the Southwest side of Knickerbocker A venue Between Menahan and Grove Streets, In The Bororugh of Brooklyn	2018	NYCDPR	100%	20181416171	$ 2,927,210.00
71	HWMWTCB5A	Reconstruction of Liberty Street- Manhattan	2018	NYCDDC	100%	20181427663	$ 1,951,333.21
72	RED-385	Installation of Water Mains & Appurtenances in the Boroughs of Staten Island and Brooklyn	2018	NYCDDC	100%	20181425084	$ 4,650,000.00
73	BG-419M	Planting of Street Trees - Brooklyn	2019	NYCDPR	100%	20201415534	$ 2,975,000.00
74	QG-519M	Planting of Street Trees - Queens	2019	NYCDPR	100%	20201420702	$ 2,875,000.00
75	R153-118M	The Construction of a 12 Acre Multi-Purpose Field, Parking Area Retention Areas, Paths and Landscaping in Fairview Park, Located on Mohr Street Between Arthur Kill Road and Veterans Road West, in the Borough of Staten Island	2019	NYCDPR	100%	20191407986	$ 12,288,411.60
76	SECBRKR02	Installing New Catch Basins & Reconstruction of Existing Catch Basins in the Boroughs of Brooklyn & Staten Island	2019	NYCDDC	100%	20191426223	$3,826,800.00
77	MIBBNC003	Installation of Storm and Sanitary Sewers and Replacement of Water Mains, Wet Lands Restorations including BMP Practices in Mason Avenue, Staten Island	2019	NYCDDC	55%	20201400406	$ 33,500,000.00
78	D00055551	Roberto Clemente State Park- Sports Field Upgrades	2019	NYSPRHP	100%	N/A	$ 2,000,000.00
79	BG-319MA	Planting of Street Trees - Brooklyn	2020	NYCDPR	90%	20211415751	$ 3,407,000.00
80	BG-1319M	Planting of Street Trees - Brooklyn	2020	NYCDPR	0%	20211425396	$ 9,450,000.00
81	BG-1619M	Planting of Street Trees - Brooklyn	2020	NYCDPR	0%	20221400723	$ 2,530,000.00
82	M159-219M	Reconstruction of Fredrick Johnson Park- Manhattan	2020	NYCDPR	100%	20201414689	$ 5,000,000.00
83	SECBRKR03	Installing New Catch Basins & Reconstruction of Existing Catch Basins in the Boroughs of Brooklyn & Staten Island ** note contract extended by 12 months & value increased*	2020	NYCDEP	60%	20211404369	$ 5,882,600.00
84	SANDRESP	East Coast Resiliency- Early Package Jackson to Cherry Streets, Manhattan	2020	NYCDDC	100%	20201420401	$ 1,899,000.00
85	XZ-120M	Emergency Contract for Cemetery Operations and Sevices fotr Hart Island, Borough of the Bronx	2020	NYCDPR	100%	20201426567	$1,000,000.00

	Contract #	Description	Year of Award	Agency	Percent Complete	Comptroller #	Contract Amount
86	48480005	Reconstruction of Water Street from Broad Street to Fulton Streeet, Manhattan	2021	NYCEDC	10%	N/A	$ 19,051,418.82
87	SEK002380	Combined Relief Sewer and Chambers imn 7th Street Between 3rd and 4th Avenues, including Water Main, Street Lighting and Traffic Signal Work, Borough of Brooklyn	2021	NYCDDC	5%	20211414686	$ 8,984,000.00
88	B219-117M	Reconstruction of Callahan Kelly Playground, Boundeed by Fulton and Truxton Streets and Eastern Parkway and Van Sinderen Ave, Brooklyn	2021	NYCDPR	35%	2021140799	$ 18,000,000.00
89	HWS2020R	Installation of Sidewalks, Adjacent Curbs and Pedestrian Ramps as Necessary in Various Loactions, Borough of Staten Island	2021	NYCDDC	25%	20211426342	$ 2,489,031.00
90	RFP EPIN 09621P0330	Management of Hart Island - Cementary and Site Management	2021	NYCHRA	10%	N/A	$ 33,000,000.00
91	HWS2020K2	Installation of Sidewalks, Adjacent Curbs and Pedestrian Ramps as Necessary in Various Loactions, Borough of Brooklyn	2021	NYCDDC	0%	N/A	$ 6,400,000.00
92	SER200232	Construction of New Storm and Sanitary Sewers and Watermains in Xenia Street, Borough of Staten Island	2021	NYCDDC	10%		$ 4,200,000.00
						TOTAL	$ 336,404,776.64

Item Grid and Bid Schedule

The Item Grid in the PASSPort system contains the Bid Schedule. Items listed in the Bid Schedule shall comply with the requirements of the corresponding sections of the specifications detailed in the table below. All references to the Standard Specifications, Details, Standards and Drawings shall be to the version in effect at the time of bid.

NOTES:

- "XXX" in the table below signifies any possible combination of characters and spaces.
- The table below may contain item formats which are not included in the Bid Schedule.
  Please refer to the Bid Schedule to determine which specifications apply.

Item Number Format	Applicable Specifications
4.XXX 6.XXX 7.XXX 8.XXX *(Except 8.01 XXX; see below)* 9.XXX HW-XXX	NYC Department of Transportation ("DOT") Standard Highway Specifications, as amended in the R-Pages, located in Volume 3 of 3 herein; ***AND*** NYC DOT Standard Details of Construction; ***OR,*** ***if the item is not contained within the Standard Specifications***, then see the applicable New Sections in the I-Pages, located in Volume 3 of 3 herein.
1.XXX 50.XXX through 55.XXX 60.XXX through 66.XXX 70.XXX through 79.XXX *(Except 79.11XXX; see below)* DSS XXX DSW XXX	NYC Department of Environmental Protection ("DEP") Standard Sewer and Water Main Specifications, as amended in the R-Pages and SW-Pages, located in Volume 3 of 3 herein; ***AND*** NYC DEP Specifications for Trunk Main Work; ***AND*** NYC DEP Sewer Design Standards; ***AND*** NYC DEP Water Main Standard Drawings; ***OR,*** ***if the item is not contained within the Standard Specifications,*** then see the Amendments to the Standard Sewer and Water Main Specifications in the SW-Pages, located in Volume 3 of 3 herein.
GI-XXX PM-XXX ROW XXX	New Sections in the I-Pages, located in Volume 3 of 3 herein ***AND*** NYC DEP Standards for Green Infrastructure.

Item Number Format	Applicable Specifications
UTL-XXX	Gas Cost Sharing Standard Specifications in the EP7-Pages, located in Volume 3 of 3 herein.
83X.XXX MX.XXX MP XXX NYC-XXX NYCT-XXX NYPD-XXX P XXX PK-XXX	New Sections in the I-Pages, located in Volume 3 of 3 herein.
BMP-XXX	Specifications for Construction of Best Management Practice (BMP) and Mitigation Area in the BMP-Pages, located in Volume 3 of 3 herein.
E XXX ME XXX	Specifications for the Specialty Electrical Works in the EL-Pages, located in Volume 3 of 3 herein.
SL-XXX	NYC DOT Division of Street Lighting Specifications ***AND*** NYC Division of Street Lighting Standard Drawings.
T-XXX	NYC DOT Specifications for Traffic Signals and Intelligent Transportation Systems ***AND*** NYC DOT Traffic Signal Standard Drawings.
JB XXX	Joint Bid Specifications in the JB-Pages, located in Volume 3 of 3 herein.
8.01 XXX	Specifications for Handling, Transportation and Disposal of Nonhazardous and Potentially Hazardous Contaminated Materials in the HAZ-Pages, located in Volume 3 of 3 herein.
67.XXX	Specifications for Abatement of Coal Tar Wrap Asbestos Containing Materials in the ASB-Pages, located in Volume 3 of 3 herein.
79.11XXX	Specifications for Abatement of Transit Authority Duct Insulation Asbestos Containing Materials in the ASB-Pages, located in Volume 3 of 3 herein.

Code	Item No.	Label	Quantity	Unit	Unit Price	Total	Price Criteria	Field type
bid_1	4.01 RAE	ASPHALT MACADAM PAVEMENT, 4" THICK	2850	S.Y.	45	128250		Required Item
bid_2	4.02 AB-R	ASPHALTIC CONCRETE WEARING COURSE, 1-1/2" THICK	202	S.Y.	30	6060		Required Item
bid_3	4.02 AG	ASPHALTIC CONCRETE WEARING COURSE, 3" THICK	27670	S.Y.	25	691750		Required Item
bid_4	4.02 CB	ASPHALTIC CONCRETE MIXTURE	842	TONS	150	126300		Required Item
bid_5	4.04 AC	CONCRETE BASE FOR PAVEMENT, 6" THICK, CLASS B-32	1439	C.Y.	350	503650		Required Item
bid_6	4.04 HC	CONCRETE BASE FOR PAVEMENT, 8" THICK (HIGH-EARLY STRENGTH)	872	C.Y.	400	348800		Required Item
bid_7	4.05 AX	HIGH-EARLY STRENGTH REINFORCED CONCRETE PAVEMENT (BUS STOPS)	259	C.Y.	600	155400		Required Item
bid_8	4.06	CONCRETE IN STRUCTURES, CLASS A-40	112	C.Y.	4000	448000		Required Item
bid_9	4.07 BA	RESET GRANITE CURB	248	L.F.	125	31000		Required Item
bid_10	4.07 CB	NEW GRANITE CURB, STRAIGHT	150	L.F.	200	30000		Required Item
bid_11	4.07 CC	NEW GRANITE CURB, CORNER	50	L.F.	300	15000		Required Item
bid_12	4.08 AA	CONCRETE CURB (18" DEEP)	2779	L.F.	60	166740		Required Item
bid_13	4.09 AD	STRAIGHT STEEL FACED CONCRETE CURB (18" DEEP)	4658	L.F.	125	582250		Required Item
bid_14	4.09 AF	STRAIGHT STEEL FACED CONCRETE CURB (27" DEEP)	522	L.F.	130	67860		Required Item

Code	Item No.	Label	Quantity	Unit	Unit Price	Total	Price Criteria	Field type
bid_15	4.09 BD	DEPRESSED STEEL FACED CONCRETE CURB (18" DEEP)	893	L.F.	150	133950		Required Item
bid_16	4.09 CD	CORNER STEEL FACED CONCRETE CURB (18" DEEP)	685	L.F.	150	102750		Required Item
bid_17	4.11 CA	FILL, PLACE MEASUREMENT	5	C.Y.	35	175		Required Item
bid_18	4.13 AAS	4" CONCRETE SIDEWALK (UNPIGMENTED)	17322	S.F.	17	294474		Required Item
bid_19	4.13 ABS	4" CONCRETE SIDEWALK (PIGMENTED)	2825	S.F.	20	56500		Required Item
bid_20	4.13 BAS	7" CONCRETE SIDEWALK (UNPIGMENTED)	24210	S.F.	19	459990		Required Item
bid_21	4.13 BBS	7" CONCRETE SIDEWALK (PIGMENTED)	455	S.F.	22	10010		Required Item
bid_22	4.13 DE	EMBEDDED PREFORMED DETECTABLE WARNING UNITS	381	S.F.	35	13335		Required Item
bid_23	4.14	STEEL REINFORCEMENT BARS	1331	LBS.	4	5324		Required Item
bid_24	4.14 W	WELDED STEEL WIRE FABRIC	280	LBS.	10	2800		Required Item
bid_25	4.15	TOPSOIL	141	C.Y.	118	16638		Required Item
bid_26	4.18 A	MAINTENANCE TREE PRUNING (UNDER 12" CAL.)	25	EACH	230	5750		Required Item
bid_27	4.18 B	MAINTENANCE TREE PRUNING (12" TO UNDER 18" CAL.)	4	EACH	350	1400		Required Item
bid_28	4.18 C	MAINTENANCE TREE PRUNING (18" TO UNDER 24" CAL.)	3	EACH	715	2145		Required Item
bid_29	4.18 D	MAINTENANCE TREE PRUNING (24" CAL. AND OVER)	1	EACH	1150	1150		Required Item

Code	Item No.	Label	Quantity	Unit	Unit Price	Total	Price Criteria	Field type
bid_30	4.21	TREE CONSULTANT	538	P/HR	75	40350		Required Item
bid_31	50.21C3C024D	24" R.C.P. CLASS III COMBINED SEWER, ON CONCRETE CRADLE	737	L.F.	960	707520		Required Item
bid_32	50.21C3C030D	30" R.C.P. CLASS III COMBINED SEWER, ON CONCRETE CRADLE	295	L.F.	1200	354000		Required Item
bid_33	50.21C3C042D	42" R.C.P. CLASS III COMBINED SEWER, ON CONCRETE CRADLE	44	L.F.	1680	73920		Required Item
bid_34	50.21C4C024D	24" R.C.P. CLASS IV COMBINED SEWER, ON CONCRETE CRADLE	725	L.F.	1080	783000		Required Item
bid_35	50.21C4C030D	30" R.C.P. CLASS IV COMBINED SEWER, ON CONCRETE CRADLE	679	L.F.	1350	916650		Required Item
bid_36	50.21C4C036D	36" R.C.P. CLASS IV COMBINED SEWER, ON CONCRETE CRADLE	282	L.F.	1620	456840		Required Item
bid_37	50.21C4C048D	48" R.C.P. CLASS IV COMBINED SEWER, ON CONCRETE CRADLE	616	L.F.	2160	1330560		Required Item
bid_38	50.21C5C024D	24" R.C.P. CLASS V COMBINED SEWER, ON CONCRETE CRADLE	438	L.F.	1200	525600		Required Item
bid_39	50.31MC12	12" E.S.V.P. STORM SEWER, ON CONCRETE CRADLE	114	L.F.	1800	205200		Required Item
bid_40	50.41C6C24	24" D.I.P. CLASS 56 COMBINED SEWER, ON CONCRETE CRADLE	27	L.F.	1000	27000		Required Item
bid_41	50.41S6C08	8" D.I.P. CLASS 56 SANITARY SEWER, ON CONCRETE CRADLE	205	L.F.	350	71750		Required Item
bid_42	51.11C002	CHAMBER NO. 2	1	EACH	250000	250000		Required Item
bid_43	51.11CNIG	NORTH INTERCEPTOR GATE CHAMBER	1	L.S.	12950000	12950000		Required Item
bid_44	51.11CSIG	SOUTH INTERCEPTOR GATE CHAMBER	1	L.S.	12950000	12950000		Required Item

Code	Item No.	Label	Quantity	Unit	Unit Price	Total	Price Criteria	Field type
bid_45	51.11P004	STANDARD 4'-0" DIAMETER PRECAST MANHOLE	11	EACH	20000	220000		Required Item
bid_46	51.11P005	STANDARD 5'-0" DIAMETER PRECAST MANHOLE	9	EACH	25000	225000		Required Item
bid_47	51.11P006	STANDARD 6'-0" DIAMETER PRECAST MANHOLE	9	EACH	30000	270000		Required Item
bid_48	51.11P007	STANDARD 7'-0" DIAMETER PRECAST MANHOLE	1	EACH	35000	35000		Required Item
bid_49	51.11P008	STANDARD 8'-0" DIAMETER PRECAST MANHOLE	1	EACH	40000	40000		Required Item
bid_50	51.11P010	STANDARD 10'-0" DIAMETER PRECAST MANHOLE	1	EACH	50000	50000		Required Item
bid_51	51.11V001	DIVERSION CHAMBER NO. 1	1	EACH	65000	65000		Required Item
bid_52	51.11V002	DIVERSION CHAMBER NO. 2	1	EACH	65000	65000		Required Item
bid_53	51.11V003	DIVERSION CHAMBER NO. 3	1	EACH	90000	90000		Required Item
bid_54	51.11V004	DIVERSION CHAMBER NO. 4	1	EACH	75000	75000		Required Item
bid_55	51.21C000000C	CLEANOUT MANHOLE	3	EACH	15000	45000		Required Item
bid_56	51.21S0B1030R	STANDARD MANHOLE TYPE B-1 ON 30” R.C.P. SEWER	1	EACH	70000	70000		Required Item
bid_57	51.21S0B2030R	STANDARD MANHOLE TYPE B-2 ON 30” R.C.P. SEWER	1	EACH	70000	70000		Required Item
bid_58	51.31D000108E	SPECIAL DEEP DROP-PIPE MANHOLE ON EXISTING 108" SEWER	2	EACH	8060000	16120000		Required Item

Code	Item No.	Label	Quantity	Unit	Unit Price	Total	Price Criteria	Field type
bid_59	51.31S00224R	STANDARD DROP-PIPE MANHOLE TYPE II ON 24" R.C.P. SEWER	1	EACH	40000	40000		Required Item
bid_60	51.31S00230R	STANDARD DROP-PIPE MANHOLE TYPE II ON 30" R.C.P. SEWER	1	EACH	45000	45000		Required Item
bid_61	51.31S00236R	STANDARD DROP-PIPE MANHOLE TYPE II ON 36" R.C.P. SEWER	1	EACH	50000	50000		Required Item
bid_62	51.41S001	STANDARD CATCH BASIN, TYPE 1	4	EACH	12000	48000		Required Item
bid_63	51.41S002	STANDARD CATCH BASIN, TYPE 2	1	EACH	12000	12000		Required Item
bid_64	51.71C00000	MODIFICATION OF EXISTING CHAMBER	5	EACH	25000	125000		Required Item
bid_65	51.71D000108E	MODIFICATION OF EXISTING DEEP DROP-PIPE MANHOLE ON EXISTING 108" SEWER	2	EACH	75000	150000		Required Item
bid_66	51.71M00000	MODIFICATION OF EXISTING MANHOLE	2	EACH	10000	20000		Required Item
bid_67	51.71M00001	MODIFICATION OF EXISTING MANHOLE NO. 1	1	EACH	10000	10000		Required Item
bid_68	52.11D12	12" DUCTILE IRON PIPE BASIN CONNECTION	195	L.F.	400	78000		Required Item
bid_69	53.11DR	TELEVISION INSPECTION AND DIGITAL AUDIO-VISUAL RECORDING OF SEWERS	6000	L.F.	10	60000		Required Item
bid_70	54.11SC	SEWER CLEANING	1290	L.F.	5	6450		Required Item

Code	Item No.	Label	Quantity	Unit	Unit Price	Total	Price Criteria	Field type
bid_71	54.12CS	CLEANING OF DRAINAGE STRUCTURES	146	C.Y.	400	58400		Required Item
bid_72	54.31SR	SHOTCRETE FOR REPAIR WORK	787	C.F.	650	511550		Required Item
bid_73	55.11AB	ABANDONING BASINS AND INLETS	3	EACH	500	1500		Required Item
bid_74	551.4020002	FURNISHING EQUIPMENT FOR INSTALLING MICROPILES	1	L.S.	100000	100000		Required Item
bid_75	6.02 AAN	UNCLASSIFIED EXCAVATION	4690	C.Y.	80	375200		Required Item
bid_76	6.03 AA	STRIPPING PAVEMENT SURFACE (ASPHALTIC CONCRETE)	5594	S.Y.	25	139850		Required Item
bid_77	6.04 BC	INSTALL GRANITE BLOCK PAVEMENT (NEW OR CLEANED EXISTING)	110	S.Y.	250	27500		Required Item
bid_78	6.22 F	ADDITIONAL HARDWARE	4900	LBS.	5	24500		Required Item
bid_79	6.24	ASPHALTIC CONCRETE SIDEWALK	1679	S.F.	15	25185		Required Item
bid_80	6.25 RS	TEMPORARY SIGNS	12582	S.F.	5	62910		Required Item
bid_81	6.26	TIMBER CURB	7855	L.F.	5	39275		Required Item
bid_82	6.28 AA	LIGHTED TIMBER BARRICADES	1928	L.F.	10	19280		Required Item
bid_83	6.28 AB	UNLIGHTED TIMBER BARRICADES	1682	L.F.	5	8410		Required Item
bid_84	6.28 BA	LIGHTED TYPE III BREAKAWAY BARRICADES	368	L.F.	10	3680		Required Item

Code	Item No.	Label	Quantity	Unit	Unit Price	Total	Price Criteria	Field type
bid_85	6.28 BB	UNLIGHTED TYPE III BREAKAWAY BARRICADES	598	L.F.	5	2990		Required Item
bid_86	6.29 LSSR	REMOVE, STORE AND REINSTALL PERMANENT DEDICATED LANE SEPARATOR SYSTEM WITH REBOUNDABLE BOLLARDS	90	L.F.	150	13500		Required Item
bid_87	6.31 WS	PRECAST CONCRETE WHEEL STOPS	129	EACH	400	51600		Required Item
bid_88	6.34 ACT	TEMPORARY CHAIN LINK FENCE, 6'-0" HIGH	7832	L.F.	75	587400		Required Item
bid_89	6.34 ACTP	TEMPORARY CHAIN LINK FENCE, 6'-0" HIGH (WITH TOP AND BOTTOM RAILS AND POSTS MOUNTED ON STEEL PLATES)	6000	L.F.	125	750000		Required Item
bid_90	6.34 AD	CHAIN LINK FENCE, 8'-0" HIGH	60	L.F.	160	9600		Required Item
bid_91	6.34 ADT	TEMPORARY CHAIN LINK FENCE, 8'-0" HIGH	440	L.F.	100	44000		Required Item
bid_92	6.34 BCT	TEMPORARY CHAIN LINK FENCE GATE FOR 6'-0" HIGH FENCE	545	L.F.	275	149875		Required Item
bid_93	6.34 BD	CHAIN LINK FENCE GATE FOR 8'-0" HIGH FENCE	20	L.F.	325	6500		Required Item
bid_94	6.34 BDT	TEMPORARY CHAIN LINK FENCE GATE FOR 8'-0" HIGH FENCE	95	L.F.	150	14250		Required Item
bid_95	6.40 CR	ENGINEER'S FIELD OFFICE (COASTAL RESILIENCY)	54	MONTH	16000	864000		Required Item
bid_96	6.41	LINE AND GRADE SURVEYS	1	L.S.	500000	500000		Required Item
bid_97	6.43 D	DIGITAL PHOTOGRAPHS	15000	SETS	15	225000		Required Item

Code	Item No.	Label	Quantity	Unit	Unit Price	Total	Price Criteria	Field type
bid_98	6.44	THERMOPLASTIC REFLECTORIZED PAVEMENT MARKINGS (4" WIDE)	57555	L.F.	1	57555		Required Item
bid_99	6.49	TEMPORARY PAVEMENT MARKINGS (4" WIDE)	44070	L.F.	1	44070		Required Item
bid_100	6.53	REMOVE EXISTING LANE MARKINGS (4" WIDE)	35250	L.F.	1	35250		Required Item
bid_101	6.55	SAWCUTTING EXISTING PAVEMENT	19248	L.F.	6	115488		Required Item
bid_102	6.59 C	CONCRETE BARRIER, HALF SECTION	1890	L.F.	175	330750		Required Item
bid_103	6.59 P	TEMPORARY CONCRETE BARRIER	3165	L.F.	75	237375		Required Item
bid_104	6.59 PF	TEMPORARY CONCRETE BARRIER WITH FENCE	3070	L.F.	150	460500		Required Item
bid_105	6.60 B	FURNISH AND INSTALL ASPHALT BLOCK PAVERS	250	S.Y.	325	81250		Required Item
bid_106	6.67	SUBBASE COURSE, SELECT GRANULAR MATERIAL	570	C.Y.	100	57000		Required Item
bid_107	6.75	GRINDING EXISTING ASPHALTIC CONCRETE WEARING COURSE	1310	C.Y.	100	131000		Required Item
bid_108	6.82 A	REMOVING EXISTING TRAFFIC AND STREET NAME SIGNS	29	S.F.	10	290		Required Item
bid_109	6.82 B	REMOVING EXISTING TRAFFIC AND STREET NAME SIGN POSTS	160	L.F.	10	1600		Required Item
bid_110	6.83 AA	FURNISHING NEW NON-REFLECTORIZED TRAFFIC SIGNS	29	S.F.	10	290		Required Item
bid_111	6.83 AB	FURNISHING NEW TRAFFIC SIGN POSTS	100	L.F.	20	2000		Required Item
bid_112	6.83 AR	FURNISHING NEW REFLECTORIZED TRAFFIC SIGNS	40	S.F.	20	800		Required Item

Code	Item No.	Label	Quantity	Unit	Unit Price	Total	Price Criteria	Field type
bid_113	6.83 BA	INSTALLING TRAFFIC SIGNS	40	S.F.	20	800		Required Item
bid_114	6.83 BB	INSTALLING TRAFFIC SIGN POSTS	160	L.F.	20	3200		Required Item
bid_115	6.86 AA	FURNISHING NEW STREET NAME SIGNS	29	S.F.	100	2900		Required Item
bid_116	6.86 AB	FURNISHING NEW STREET NAME SIGN POSTS	100	L.F.	20	2000		Required Item
bid_117	6.86 BA	INSTALLING STREET NAME SIGNS	29	S.F.	20	580		Required Item
bid_118	6.86 BB	INSTALLING STREET NAME SIGN POSTS	160	L.F.	20	3200		Required Item
bid_119	6.87	PLASTIC BARRELS	3283	EACH	5	16415		Required Item
bid_120	6.87 L	PLASTIC BARRELS WITH LIGHT	1397	EACH	55	76835		Required Item
bid_121	6.91	REFLECTIVE CRACKING MEMBRANE (18" WIDE)	12332	L.F.	4	49328		Required Item
bid_122	6.99	AUDIO AND VIDEO DOCUMENTATION SURVEY	1	L.S.	50000	50000		Required Item
bid_123	60.11R520	FURNISHING AND DELIVERING 20-INCH DUCTILE IRON RESTRAINED JOINT PIPE (CLASS 55)	383	L.F.	225	86175		Required Item
bid_124	60.11R606	FURNISHING AND DELIVERING 6-INCH DUCTILE IRON RESTRAINED JOINT PIPE (CLASS 56)	250	L.F.	54	13500		Required Item
bid_125	60.11R612	FURNISHING AND DELIVERING 12-INCH DUCTILE IRON RESTRAINED JOINT PIPE (CLASS 56)	2042	L.F.	115	234830		Required Item

Code	Item No.	Label	Quantity	Unit	Unit Price	Total	Price Criteria	Field type
bid_126	60.12D06	LAYING 6-INCH DUCTILE IRON PIPE AND FITTINGS	300	L.F.	160	48000		Required Item
bid_127	60.12D12	LAYING 12-INCH DUCTILE IRON PIPE AND FITTINGS	2172	L.F.	200	434400		Required Item
bid_128	60.12D20	LAYING 20-INCH DUCTILE IRON PIPE AND FITTINGS	393	L.F.	240	94320		Required Item
bid_129	60.13M0A24	FURNISHING AND DELIVERING DUCTILE IRON MECHANICAL JOINT 24-INCH DIAMETER AND SMALLER FITTINGS, INCLUDING WEDGE TYPE RETAINER GLANDS	5.8	TONS	13500	78300		Required Item
bid_130	61.11DMM06	FURNISHING AND DELIVERING 6-INCH MECHANICAL JOINT DUCTILE IRON GATE VALVE COMPLETE WITH WEDGE TYPE RETAINER GLANDS	10	EACH	1400	14000		Required Item
bid_131	61.11DMM12	FURNISHING AND DELIVERING 12-INCH MECHANICAL JOINT DUCTILE IRON GATE VALVE COMPLETE WITH WEDGE TYPE RETAINER GLANDS	8	EACH	4200	33600		Required Item
bid_132	61.12DMM06	SETTING 6-INCH MECHANICAL JOINT DUCTILE IRON GATE VALVE COMPLETE WITH WEDGE TYPE RETAINER GLANDS	10	EACH	800	8000		Required Item
bid_133	61.12DMM12	SETTING 12-INCH MECHANICAL JOINT DUCTILE IRON GATE VALVE COMPLETE WITH WEDGE TYPE RETAINER GLANDS	9	EACH	1300	11700		Required Item

Code	Item No.	Label	Quantity	Unit	Unit Price	Total	Price Criteria	Field type
bid_134	619.0199131	BARRIER/SHADOW VEHICLE	10	DAY	2000	20000		Required Item
bid_135	619.1802	TEMPORARY IMPACT ATTENUATOR	24	EACH	32000	768000		Required Item
bid_136	619.1812	TEMPORARY IMPACT ATTENUATOR - GATING (TEST LEVEL 2)	1	EACH	11000	11000		Required Item
bid_137	62.11SD	FURNISHING AND DELIVERING HYDRANTS	5	EACH	4500	22500		Required Item
bid_138	62.12SG	SETTING HYDRANTS COMPLETE WITH WEDGE TYPE RETAINER GLANDS	10	EACH	4000	40000		Required Item
bid_139	62.13RH	REMOVING HYDRANTS	5	EACH	500	2500		Required Item
bid_140	62.14FS	FURNISHING, DELIVERING AND INSTALLING HYDRANT FENDERS	14	EACH	500	7000		Required Item
bid_141	63.11VC	FURNISHING AND DELIVERING VARIOUS CASTINGS	9.2	TONS	3500	32200		Required Item
bid_142	64.12COEG	CUTTING AND OFFSETTING HOUSE SERVICE WATER CONNECTIONS (EQUAL TO OR GREATER THAN 3-INCH DIAMETER)	70	L.F.	150	10500		Required Item
bid_143	64.12ESEG	EXTENDING HOUSE SERVICE WATER CONNECTIONS (EQUAL TO OR GREATER THAN 3-INCH DIAMETER)	60	L.F.	150	9000		Required Item

Code	Item No.	Label	Quantity	Unit	Unit Price	Total	Price Criteria	Field type
bid_144	64.13WC20	FURNISHING, DELIVERING AND INSTALLING WET CONNECTION SLEEVE ON 20-INCH WATER MAIN PIPE WITH VARIOUS OUTLETS	1	EACH	8000	8000		Required Item
bid_145	65.11BR	FURNISHING, DELIVERING AND INSTALLING BANDS, RODS, WASHERS, ETC., COMPLETE, FOR RESTRAINING JOINTS	2100	LBS.	2	4200		Required Item
bid_146	65.21PS	FURNISHING AND PLACING POLYETHYLENE SLEEVE	2035	L.F.	1	2035		Required Item
bid_147	65.31FF	FURNISHING, DELIVERING AND PLACING FILTER FABRIC	36575	S.F.	1	36575	Unit price bid shall not be less than: $ 0.10	Required Item
bid_148	65.71SG	FURNISHING, DELIVERING AND PLACING SCREENED GRAVEL OR SCREENED BROKEN STONE BEDDING	4354	C.Y.	80	348320		Required Item
bid_149	7.12 A	PROCTOR ANALYSIS	120	EACH	200	24000		Required Item
bid_150	7.12 B	IN-PLACE SOIL DENSITY TEST	120	EACH	150	18000		Required Item
bid_151	7.13 B	MAINTENANCE OF SITE	48	MONTH	23000	1104000		Required Item
bid_152	7.16 D	TEST PITS	1600	C.Y.	600	960000		Required Item
bid_153	7.30 B	REMOVAL OF TRACK	500	L.F.	150	75000		Required Item

Code	Item No.	Label	Quantity	Unit	Unit Price	Total	Price Criteria	Field type
bid_154	7.36	PEDESTRIAN STEEL BARRICADES	11646	L.F.	5	58230		Required Item
bid_155	7.88 AA	RODENT INFESTATION SURVEY AND MONITORING	1	L.S.	160535	160535	Unit price bid shall not be less than: $ 160,535.00	Required Item
bid_156	7.88 AB	RODENT BAIT STATIONS	100	EACH	80	8000	Unit price bid shall not be less than: $ 80.00	Required Item
bid_157	7.88 AC	BAITING OF RODENT BAIT STATIONS	9000	EACH	10.5	94500	Unit price bid shall not be less than: $ 10.50	Required Item
bid_158	7.88 AD	WATERBUG BAIT APPLICATIONS	10	BLOCK	80	800	Unit price bid shall not be less than: $ 80.00	Required Item
bid_159	7.96 A	ANTI-GRAFFITI COATING	115	S.F.	25	2875		Required Item
bid_160	70.81CB	CLEAN BACKFILL	2298	C.Y.	16.75	38491.5	Unit price bid shall not be less than: $ 16.75	Required Item
bid_161	70.91SW12	FURNISHING AND PLACING SHEETING AND BRACING IN TRENCH FOR WATER MAIN PIPE 12-INCH IN DIAMETER AND LESS	33600	S.F.	10	336000		Required Item
bid_162	73.21AC	ADDITIONAL CONCRETE	345	C.Y.	200	69000		Required Item

Code	Item No.	Label	Quantity	Unit	Unit Price	Total	Price Criteria	Field type
bid_163	73.31AE5	ADDITIONAL EARTH EXCAVATION INCLUDING TEST PITS (OVER 24' DEPTH)	1200	C.Y.	37.5	45000	Unit price bid shall not be less than: $ 37.50	Required Item
bid_164	73.41AG	ADDITIONAL SELECT GRANULAR BACKFILL	1149	C.Y.	90	103410		Required Item
bid_165	73.51AS	ADDITIONAL STEEL REINFORCING BARS	78430	LBS.	1	78430	Unit price bid shall not be less than: $ 1.00	Required Item
bid_166	73.61AT	ADDITIONAL STONE BALLAST	80	C.Y.	15	1200	Unit price bid shall not be less than: $ 15.00	Required Item
bid_167	8.02 A	SPECIAL CARE EXCAVATION AND RESTORATION FOR SIDEWALK WORK	3300	S.F.	10	33000		Required Item
bid_168	8.02 B	SPECIAL CARE EXCAVATION AND RESTORATION FOR CURB WORK	900	L.F.	25	22500		Required Item
bid_169	9.99	FLASHING ARROW BOARD	11	EACH	7500	82500		Required Item
bid_170	ESCR 9.30	STORM WATER POLLUTION PREVENTION	1	L.S.	35000	35000		Required Item
bid_171	ESCR-10	AIR QUALITY MONITORING	48	MONTH	2500	120000		Required Item
bid_172	ESCR-11	NOISE MONITORING	48	MONTH	25000	1200000		Required Item
bid_173	ESCR-501	NORTH INTERCEPTOR GATE BUILDING	1	L.S.	2500000	2500000		Required Item

Code	Item No.	Label	Quantity	Unit	Unit Price	Total	Price Criteria	Field type
bid_174	ESCR-502	SOUTH INTERCEPTOR GATE BUILDING	1	L.S.	2500000	2500000		Required Item
bid_175	ESCR-51.11C003	CHAMBER NO. 3	1	L.S.	8084125	8084125		Required Item
bid_176	ESCR-51.12P	INTERCEPTOR GATE SPARE PARTS	1	L.S.	125000	125000	Unit price bid shall not be less than: $ 125,000.00	Required Item
bid_177	ESCR-51.12SG108	NORTH AND SOUTH INTERCEPTOR GATES	1	L.S.	7000000	7000000		Required Item
bid_178	ESCR-6.18 DPC	DECORATIVE POST AND CHAIN FENCE	40	L.F.	300	12000		Required Item
bid_179	ESCR-619.3610	QUICK CHANGE MOVEABLE BARRIER TRANSFER VEHICLE (QMBTV) - (LEASE & MAINTAIN)	6.1	MONTH	75000	457500		Required Item
bid_180	ESCR-619.3614	QUICK-CHANGE MOVEABLE CONCRETE BARRIER (QMCB) - LEASE & MAINTAIN	400	L.F.	350	140000		Required Item
bid_181	ESCR-619.37	QUICK CHANGE MOVEABLE BARRIER - OPERATION	1140	L.F.	70	79800		Required Item
bid_182	ESCR-70.13MC.1275	12.750 IN. O.D. X 0.5 IN. WALL THICKNESS MICROPILE	14054	L.F.	385	5410790		Required Item
bid_183	ESCR-70.13MC.1275C	PILE LOAD TESTING FOR 12.750 IN. O.D. X 0.5 IN. WALL THICKNESS MICROPILE - STATIC COMPRESSION TEST	5	PER TEST	65000	325000		Required Item
bid_184	ESCR-70.13MC.1600	16.000 IN. O.D. X 0.495 IN. WALL THICKNESS MICROPILE	4000	L.F.	650	2600000		Required Item

Code	Item No.	Label	Quantity	Unit	Unit Price	Total	Price Criteria	Field type
bid_185	ESCR-70.13MC.1600C	PILE LOAD TESTING FOR 16.000 IN. O.D. X 0.495 IN. WALL THICKNESS MICROPILE - STATIC COMPRESSION TEST	2	PER TEST	65000	130000		Required Item
bid_186	ESCR-70.13MC.9625	9.625 IN. O.D. X 0.47 IN. WALL THICKNESS MICROPILE	52738	L.F.	260	13711880		Required Item
bid_187	ESCR-70.13MC.9625C	PILE LOAD TESTING FOR 9.625 IN. O.D. X 0.47 IN. WALL THICKNESS MICROPILE - STATIC COMPRESSION TEST	7	PER TEST	65000	455000		Required Item
bid_188	ESCR-70.4101	SHORING, BRACING, SUPPORTING AND PROTECTING EXISTING LARGE SEWERS AT JACKSON AND WATER STREETS	1	L.S.	1250000	1250000		Required Item
bid_189	ESCR-70.4102	SHORING, BRACING, SUPPORTING AND PROTECTING EXISTING LARGE SEWERS AT AVENUE C, STA C415+70	1	L.S.	1250000	1250000		Required Item
bid_190	ESCR-76.11	CONSTRUCTION REPORT	1	L.S.	400000	400000		Required Item
bid_191	ESCR-76.21	MONITORING AND POST-CONSTRUCTION REPORT	1	L.S.	1000000	1000000		Required Item
bid_192	ESCR-8.01 C1	HANDLING, TRANSPORTING, AND DISPOSAL OF NON-HAZARDOUS CONTAMINATED SOIL	1000	TONS	164	164000	Unit price bid shall not be less than: $ 164.00	Required Item

Code	Item No.	Label	Quantity	Unit	Unit Price	Total	Price Criteria	Field type
bid_193	ESCR-8.01 C2	SAMPLING AND TESTING OF CONTAMINATED/POTENTIALLY HAZARDOUS SOIL FOR DISPOSAL PURPOSES	20	SETS	2190	43800	Unit price bid shall not be less than: $ 2,190.00	Required Item
bid_194	ESCR-8.01 H	HANDLING, TRANSPORTING, AND DISPOSAL OF HAZARDOUS SOIL	500	TONS	385	192500	Unit price bid shall not be less than: $ 385.00	Required Item
bid_195	ESCR-8.01 S	HEALTH AND SAFETY	1	L.S.	602585	602585	Unit price bid shall not be less than: $ 602,585.00	Required Item
bid_196	ESCR-8.01 W1	REMOVAL, TREATMENT, AND DISCHARGE/DISPOSAL OF CONTAMINATED WATER	150	DAY	4380	657000	Unit price bid shall not be less than: $ 4,380.00	Required Item
bid_197	ESCR-8.01 W2-1	NYCDEP - SAMPLING AND TESTING OF CONTAMINATED WATER	40	SETS	1645	65800	Unit price bid shall not be less than: $ 1,645.00	Required Item
bid_198	JB 100.1(CE)	UTILITIES CROSSING TRENCH FOR CATCH BASIN CHUTE CONNECTION AND/OR TEST PIT (TYPE .1)	8	EACH	355.5	2844	Unit price bid shall not be less than: $ 355.50	Required Item
bid_199	JB 100.1(ECS)	UTILITIES CROSSING TRENCH FOR CATCH BASIN CHUTE CONNECTION AND/OR TEST PIT (TYPE .1)	8	EACH	595	4760	Unit price bid shall not be less than: $ 595.00	Required Item

Code	Item No.	Label	Quantity	Unit	Unit Price	Total	Price Criteria	Field type
bid_200	JB 100.2(CE)	UTILITIES CROSSING TRENCH FOR CATCH BASIN CHUTE CONNECTION AND/OR TEST PIT (TYPE .2)	3	EACH	667	2001	Unit price bid shall not be less than: $ 666.00	Required Item
bid_201	JB 100.3(CE)	UTILITIES CROSSING TRENCH FOR CATCH BASIN CHUTE CONNECTION AND/OR TEST PIT (TYPE .3)	2	EACH	987	1974	Unit price bid shall not be less than: $ 987.00	Required Item
bid_202	JB 100.4(CE)	UTILITIES CROSSING TRENCH FOR CATCH BASIN CHUTE CONNECTION AND/OR TEST PIT (TYPE .4)	1	EACH	1284.75	1284.75	Unit price bid shall not be less than: $ 1,284.75	Required Item
bid_203	JB 1006V(CE)	6" VERTICAL OR ROLLED WATER MAIN OFFSET	8	EACH	3638	29104	Unit price bid shall not be less than: $ 3,638.00	Required Item
bid_204	JB 1008V(CE)	8" VERTICAL OR ROLLED WATER MAIN OFFSET	2	EACH	4799	9598	Unit price bid shall not be less than: $ 4,799.00	Required Item
bid_205	JB 101.1(CE)	UTILITIES CROSSING TRENCH FOR SEWERS OVER 12" TO 24" DIAMETER (TYPE .1)	19	EACH	3021	57399	Unit price bid shall not be less than: $ 3,021.00	Required Item
bid_206	JB 101.1(ECS)	UTILITIES CROSSING TRENCH FOR SEWERS OVER 12" TO 24" DIAMETER (TYPE .1)	23	EACH	2364	54372	Unit price bid shall not be less than: $ 2,364.00	Required Item

Code	Item No.	Label	Quantity	Unit	Unit Price	Total	Price Criteria	Field type
bid_207	JB 101.2(CE)	UTILITIES CROSSING TRENCH FOR SEWERS OVER 12" TO 24" DIAMETER (TYPE .2)	27	EACH	3777.75	101999.25	Unit price bid shall not be less than: $ 3,777.75	Required Item
bid_208	JB 101.2(ECS)	UTILITIES CROSSING TRENCH FOR SEWERS OVER 12" TO 24" DIAMETER (TYPE .2)	5	EACH	2394	11970	Unit price bid shall not be less than: $ 2,394.00	Required Item
bid_209	JB 101.3(CE)	UTILITIES CROSSING TRENCH FOR SEWERS OVER 12" TO 24" DIAMETER (TYPE .3)	5	EACH	4973.25	24866.25	Unit price bid shall not be less than: $ 4,973.25	Required Item
bid_210	JB 101.3(ECS)	UTILITIES CROSSING TRENCH FOR SEWERS OVER 12" TO 24" DIAMETER (TYPE .3)	5	EACH	3309	16545	Unit price bid shall not be less than: $ 3,309.00	Required Item
bid_211	JB 101.4(CE)	UTILITIES CROSSING TRENCH FOR SEWERS OVER 12" TO 24" DIAMETER (TYPE .4)	3	EACH	5042.25	15126.75	Unit price bid shall not be less than: $ 5,042.25	Required Item
bid_212	JB 101.5(CE)	UTILITIES CROSSING TRENCH FOR SEWERS OVER 12" TO 24" DIAMETER (TYPE .5)	2	EACH	6213	12426	Unit price bid shall not be less than: $ 6,213.00	Required Item
bid_213	JB 1012V(CE)	12" VERITCAL OR ROLLED WATER MAIN OFFSET	6	EACH	7296	43776	Unit price bid shall not be less than: $ 7,296.00	Required Item

Code	Item No.	Label	Quantity	Unit	Unit Price	Total	Price Criteria	Field type
bid_214	JB 102.1(CE)	UTILITIES CROSSING TRENCH FOR SEWERS OVER 24" TO 36" DIAMETER (TYPE .1)	6	EACH	3119.25	18715.5	Unit price bid shall not be less than: $ 3,119.25	Required Item
bid_215	JB 102.1(ECS)	UTILITIES CROSSING TRENCH FOR SEWERS OVER 24" TO 36" DIAMETER (TYPE .1)	11	EACH	2905	31955	Unit price bid shall not be less than: $ 2,905.00	Required Item
bid_216	JB 102.2(CE)	UTILITIES CROSSING TRENCH FOR SEWERS OVER 24" TO 36" DIAMETER (TYPE .2)	6	EACH	3802.5	22815	Unit price bid shall not be less than: $ 3,802.50	Required Item
bid_217	JB 102.3(CE)	UTILITIES CROSSING TRENCH FOR SEWERS OVER 24" TO 36" DIAMETER (TYPE .3)	4	EACH	4777.5	19110	Unit price bid shall not be less than: $ 4,777.50	Required Item
bid_218	JB 102.4(CE)	UTILITIES CROSSING TRENCH FOR SEWERS OVER 24" TO 36" DIAMETER (TYPE .4)	3	EACH	5594.25	16782.75	Unit price bid shall not be less than: $ 5,594.25	Required Item
bid_219	JB 102.5(CE)	UTILITIES CROSSING TRENCH FOR SEWERS OVER 24" TO 36" DIAMETER (TYPE .5)	18	EACH	6238.5	112293	Unit price bid shall not be less than: $ 6,238.50	Required Item
bid_220	JB 1020V(CE)	20" VERTICAL OR ROLLED WATER MAIN OFFSET	4	EACH	15793.5	63174	Unit price bid shall not be less than: $ 15,793.50	Required Item

Code	Item No.	Label	Quantity	Unit	Unit Price	Total	Price Criteria	Field type
bid_221	JB 103.1(CE)	UTILITIES CROSSING TRENCH FOR SEWERS OVER 36" TO 48" DIAMETER (TYPE .1)	18	EACH	3438.75	61897.5	Unit price bid shall not be less than: $ 3,438.75	Required Item
bid_222	JB 103.1(ECS)	SUPPORT OF FACILITIES UP TO & INCLUDING 0.75 S.F. CROSSING SEWERS OVER 36" UP TO & INCLUDING 48" IN DIAMETER	5	EACH	3971	19855	Unit price bid shall not be less than: $ 3,971.00	Required Item
bid_223	JB 103.2(CE)	UTILITIES CROSSING TRENCH FOR SEWERS OVER 36" TO 48" DIAMETER (TYPE .2)	19	EACH	4226.25	80298.75	Unit price bid shall not be less than: $ 4,226.25	Required Item
bid_224	JB 103.2(ECS)	UTILITIES CROSSING TRENCH FOR SEWERS OVER 36" TO 48" DIAMETER (TYPE .2)	4	EACH	3971	15884	Unit price bid shall not be less than: $ 3,971.00	Required Item
bid_225	JB 103.3(CE)	UTILITIES CROSSING TRENCH FOR SEWERS OVER 36" TO 48" DIAMETER (TYPE .3)	4	EACH	5305.5	21222	Unit price bid shall not be less than: $ 5,305.50	Required Item
bid_226	JB 103.4(CE)	UTILITIES CROSSING TRENCH FOR SEWERS OVER 36" TO 48" DIAMETER (TYPE .4)	1	EACH	6124.5	6124.5	Unit price bid shall not be less than: $ 6,124.50	Required Item
bid_227	JB 108.1(CE)	UTILITIES CROSSING TRENCH FOR WATER MAIN UP TO AND INCLUDING 12" DIAMETER (TYPE .1)	20	EACH	485.25	9705	Unit price bid shall not be less than: $ 485.25	Required Item

Code	Item No.	Label	Quantity	Unit	Unit Price	Total	Price Criteria	Field type
bid_228	JB 108.1(ECS)	UTILITIES CROSSING TRENCH FOR WATER MAIN UP TO AND INCLUDING 12" DIAMETER (TYPE .1)	18	EACH	886	15948	Unit price bid shall not be less than: $ 886.00	Required Item
bid_229	JB 108.2(CE)	UTILITIES CROSSING TRENCH FOR WATER MAIN UP TO AND INCLUDING 12" DIAMETER (TYPE .2)	34	EACH	1523.25	51790.5	Unit price bid shall not be less than: $ 1,523.25	Required Item
bid_230	JB 108.2(ECS)	UTILITIES CROSSING TRENCH FOR WATER MAIN UP TO AND INCLUDING 12" DIAMETER (TYPE .2)	8	EACH	1097	8776	Unit price bid shall not be less than: $ 1,097.00	Required Item
bid_231	JB 108.3(CE)	UTILITIES CROSSING TRENCH FOR WATER MAIN UP TO AND INCLUDING 12" DIAMETER (TYPE .3)	10	EACH	2476.5	24765	Unit price bid shall not be less than: $ 2,476.50	Required Item
bid_232	JB 108.4(CE)	UTILITIES CROSSING TRENCH FOR WATER MAIN UP TO AND INCLUDING 12" DIAMETER (TYPE .4)	4	EACH	3095.25	12381	Unit price bid shall not be less than: $ 3,095.25	Required Item
bid_233	JB 109.1(CE)	UTILITIES CROSSING TRENCH FOR WATER MAIN OVER 12" AND UP TO 24" DIAMETER (TYPE .1)	3	EACH	1252.5	3757.5	Unit price bid shall not be less than: $ 1,252.50	Required Item
bid_234	JB 109.1(ECS)	UTILITIES CROSSING TRENCH FOR WATER MAIN OVER 12" AND UP TO 24" DIAMETER (TYPE .1)	5	EACH	1003	5015	Unit price bid shall not be less than: $ 1,003.00	Required Item

Code	Item No.	Label	Quantity	Unit	Unit Price	Total	Price Criteria	Field type
bid_235	JB 109.2(CE)	UTILITIES CROSSING TRENCH FOR WATER MAIN OVER 12" AND UP TO 24" DIAMETER (TYPE .2)	6	EACH	1875	11250	Unit price bid shall not be less than: $ 1,875.00	Required Item
bid_236	JB 109.3(CE)	UTILITIES CROSSING TRENCH FOR WATER MAIN OVER 12" AND UP TO 24" DIAMETER (TYPE .3)	3	EACH	3002.25	9006.75	Unit price bid shall not be less than: $ 3,002.25	Required Item
bid_237	JB 109.4(CE)	UTILITIES CROSSING TRENCH FOR WATER MAIN OVER 12" AND UP TO 24" DIAMETER (TYPE .4)	2	EACH	3904.5	7809	Unit price bid shall not be less than: $ 3,904.50	Required Item
bid_238	JB 122(CE)	INCREMENTAL COST FOR MGP CONTAMINENT HANDLING & DISPOSAL	10000	C.Y.	65	650000	Unit price bid shall not be less than: $ 65.00	Required Item
bid_239	JB 200(CE)	EXTRA DEPTH EXCAVATION OF CATCH BASIN CHUTE CONNECTION PIPES	100	L.F.	119.25	11925	Unit price bid shall not be less than: $ 119.25	Required Item
bid_240	JB 225(CE)	INSTALLATION AND REMOVAL OF CATCH BASINS WITH UTILITY INTERFERENCES	3	EACH	5100	15300	Unit price bid shall not be less than: $ 5,100.00	Required Item
bid_241	JB 225(ECS)	INSTALLATION AND REMOVAL OF CATCH BASINS WITH UTILITY INTERFERENCES	5	EACH	2925	14625	Unit price bid shall not be less than: $ 2,925.00	Required Item

Code	Item No.	Label	Quantity	Unit	Unit Price	Total	Price Criteria	Field type
bid_242	JB 226(CE)	INSTALLATION OF CATCH BASINS WITH UTILITY INTERFERENCES	2	EACH	3693.75	7387.5	Unit price bid shall not be less than: $ 3,693.75	Required Item
bid_243	JB 226(ECS)	INSTALLATION OF CATCH BASINS WITH UTILITY INTERFERENCES	5	EACH	1463	7315	Unit price bid shall not be less than: $ 1,463.00	Required Item
bid_244	JB 300(CE)	SPECIAL CARE EXCAVATION AND BACKFILLING	344	C.Y.	231	79464	Unit price bid shall not be less than: $ 231.00	Required Item
bid_245	JB 300(ECS)	SPECIAL CARE EXCAVATION AND BACKFILLING	55	C.Y.	167	9185	Unit price bid shall not be less than: $ 167.00	Required Item
bid_246	JB 301(CE)	SPECIAL CARE EXCAVATION AND BACKFILLING FOR OIL-O-STATIC PIPE	120	C.Y.	285.75	34290	Unit price bid shall not be less than: $ 285.75	Required Item
bid_247	JB 302(CE)	FIELD COATING OF OIL-O-STATIC FEEDER PIPES	1800	L.F.	35	63000	Unit price bid shall not be less than: $ 35.00	Required Item
bid_248	JB 303(CE)	FURNISH, DELIVER AND INSTALL TYPE 3/8 CLEAN SAND BACKFILL	210	C.Y.	38.25	8032.5	Unit price bid shall not be less than: $ 38.25	Required Item

Code	Item No.	Label	Quantity	Unit	Unit Price	Total	Price Criteria	Field type
bid_249	JB 330E.1(CE)	SUPPORT AND PROTECTION OF ELECTRIC AND GAS FACILITIES DURING EXCAVATION OF CITY TRENCH WHEN FACILITIES LIE WITHIN TRENCH LIMITS (TYPE .1)	120	L.F.	24.75	2970	Unit price bid shall not be less than: $ 24.75	Required Item
bid_250	JB 330E.2(CE)	SUPPORT AND PROTECTION OF ELECTRIC AND GAS FACILITIES DURING EXCAVATION OF CITY TRENCH WHEN FACILITIES LIE WITHIN TRENCH LIMITS (TYPE .2)	410	L.F.	30	12300	Unit price bid shall not be less than: $ 30.00	Required Item
bid_251	JB 330E.3(CE)	SUPPORT AND PROTECTION OF ELECTRIC AND GAS FACILITIES DURING EXCAVATION OF CITY TRENCH WHEN FACILITIES LIE WITHIN TRENCH LIMITS (TYPE .3)	100	L.F.	34.5	3450	Unit price bid shall not be less than: $ 34.50	Required Item
bid_252	JB 330E.4(CE)	SUPPORT AND PROTECTION OF ELECTRIC AND GAS FACILITIES DURING EXCAVATION OF CITY TRENCH WHEN FACILITIES LIE WITHIN TRENCH LIMITS (TYPE .4)	80	L.F.	48	3840	Unit price bid shall not be less than: $ 48.00	Required Item
bid_253	JB 330T1(ECS)	SUPPORT AND PROTECTION OF COMMUNICATION UTILITY FACILITIES DURING EXCAVATION OF CITY TRENCH WHEN PARALLELING COMMUNICATION FACILITIES LIE COMPLETELY IN THE PROPOSED TRENCH	1025	L.F.	115	117875	Unit price bid shall not be less than: $ 115.00	Required Item

Code	Item No.	Label	Quantity	Unit	Unit Price	Total	Price Criteria	Field type
bid_254	JB 400(CE)	TEST PITS FOR UTILITY FACILITIES	280	C.Y.	1000	280000	Unit price bid shall not be less than: $ 197.25	Required Item
bid_255	JB 400(ECS)	TEST PITS FOR UTILITY FACILITIES	40	C.Y.	1000	40000	Unit price bid shall not be less than: $ 218.00	Required Item
bid_256	JB 400A(CE)	SURVEYED AND DRAFTED TEST PITS FOR UTILITY FACILITIES	250	C.Y.	240	60000	Unit price bid shall not be less than: $ 240.00	Required Item
bid_257	JB 401(CE)	TRENCH EXCAVATION FOR ADJUSTMENT OF UTILITY FACILITIES	421	C.Y.	237.75	100092.75	Unit price bid shall not be less than: $ 237.75	Required Item
bid_258	JB 401(ECS)	TRENCH EXCAVATION FOR ADJUSTMENT OF UTILITY FACILITIES	338	C.Y.	228	77064	Unit price bid shall not be less than: $ 228.00	Required Item
bid_259	JB 402.1A(CE)	EXISTING CONCRETE ENCASED CONDUITS PLACED IN FINAL POSITION WITH CONCRETE ENCASEMENT	4148	L.F.	75	311100	Unit price bid shall not be less than: $ 75.00	Required Item
bid_260	JB 402.2A(CE)	EXISTING NON-CONCRETE ENCASED CONDUITS PLACED IN FINAL POSITION WITH CONCRETE ENCASEMENT	2765	L.F.	48.75	134793.75	Unit price bid shall not be less than: $ 48.75	Required Item

Code	Item No.	Label	Quantity	Unit	Unit Price	Total	Price Criteria	Field type
bid_261	JB 402B.1A(CE)	EXISTING TRANSMISSION FACILITY UP TO 6" DIAM, ADJUSTED 0" UP TO AND INCLUDING 6" IN ANY DIRECTION, TO FINAL POSITION	80	L.F.	60	4800	Unit price bid shall not be less than: $ 60.00	Required Item
bid_262	JB 402B.1B(CE)	EXISTING TRANSMISSION FACILITY 6" TO 12" DIAM, ADJUSTED 0" UP TO AND INCLUDING 6" IN ANY DIRECTION, TO FINAL POSITION	120	L.F.	65	7800	Unit price bid shall not be less than: $ 65.00	Required Item
bid_263	JB 402B.2A(CE)	EXISTING TRANSMISSION FACILITY UP TO 6" DIAM, ADJUSTED GREATER THAN 6" UP TO AND INCLUDING 9" IN ANY DIRECTION, TO FINAL POSITION	120	L.F.	70	8400	Unit price bid shall not be less than: $ 70.00	Required Item
bid_264	JB 402B.2B(CE)	EXISTING TRANSMISSION FACILITY 6" TO 12" DIAM, ADJUSTED GREATER THAN 6" UP TO AND INCLUDING 9" IN ANY DIRECTION, TO FINAL POSITION	180	L.F.	75	13500	Unit price bid shall not be less than: $ 75.00	Required Item
bid_265	JB 402B.3A(CE)	EXISTING TRANSMISSION FACILITY UP TO 6" DIAM, ADJUSTED GREATERTHAN 9" UP TO AND INCLUDING 12" IN ANY DIRECTION, TO FINAL POSITION	200	L.F.	80	16000	Unit price bid shall not be less than: $ 80.00	Required Item
bid_266	JB 402B.3B(CE)	EXISTING TRANSMISSION FACILITY 6" TO 12" DIAM, ADJUSTED GREATER THAN 9" UP TO AND INCLUDING 12" IN ANY DIRECTION, TO FINAL POSITION	300	L.F.	85	25500	Unit price bid shall not be less than: $ 85.00	Required Item

Code	Item No.	Label	Quantity	Unit	Unit Price	Total	Price Criteria	Field type
bid_267	JB 402T.1A(ECS)	EXISTING CONCRETE ENCASED TELECOMMUNICATION CONDUITS PLACED IN FINAL POSITION WITH CONCRETE ENCASEMENT	1980	L.F.	57.63	114107.4	Unit price bid shall not be less than: $ 57.63	Required Item
bid_268	JB 402T.2A(ECS)	EXISTING NON-CONCRETE ENCASED TELECOMMUNICATION CONDUITS PLACED IN FINAL POSITION WITH CONCRETE ENCASEMENT	150	L.F.	46	6900	Unit price bid shall not be less than: $ 46.00	Required Item
bid_269	JB 402T.R1A(ECS)	EXISTING CONCRETE ENCASED STEEL/IRON CONDUITS PLACED IN FINAL POSITION WITH CONCRETE ENCASEMENT	180	L.F.	49.18	8852.4	Unit price bid shall not be less than: $ 49.18	Required Item
bid_270	JB 402T.V1A(ECS)	EXISTING VACANT CONCRETE ENCASED TELECOMMUNICATION CONDUITS PLACED IN FINAL POSITION WITH CONCRETE ENCASEMENT	400	L.F.	53	21200	Unit price bid shall not be less than: $ 53.00	Required Item
bid_271	JB 403(CE)	PLACING STEEL PROTECTION PLATES FOR UTILITY FACILITIES	2200	S.F.	2.25	4950	Unit price bid shall not be less than: $ 2.25	Required Item
bid_272	JB 403T.1(ECS)	FURNISH AND INSTALL STEEL PROTECTION PLATES FOR UTILITY FACILITIES (1/4" THICK)	200	S.F.	12.37	2474	Unit price bid shall not be less than: $ 12.37	Required Item

Code	Item No.	Label	Quantity	Unit	Unit Price	Total	Price Criteria	Field type
bid_273	JB 404(CE)	PIER & PLATE METHOD OF PROTECTION FOR DUCTILE IRON WATER MAINS AND OTHER SHALLOW FACILITIES	600	S.F.	339	203400	Unit price bid shall not be less than: $ 339.00	Required Item
bid_274	JB 405.1(CE)	TRENCH EXCAVATION FOR INSTALLATION OF UTILITY FACILITIES WITH TOTAL DEPTHS LESS THAN FIVE FEET	4010	C.Y.	203.25	815032.5	Unit price bid shall not be less than: $ 203.25	Required Item
bid_275	JB 405.2(CE)	TRENCH EXCAVATION FOR INSTALLATION OF UTILITY FACILITIES WITH TOTAL DEPTHS EQUAL TO OR GREATER THAN FIVE FEET, REQUIRING SHEETING	2315	C.Y.	350	810250	Unit price bid shall not be less than: $ 294.00	Required Item
bid_276	JB 406(CE)	EXCAVATION FOR UTILITY STRUCTURE	4015	C.Y.	229.5	921442.5	Unit price bid shall not be less than: $ 229.50	Required Item
bid_277	JB 410.1(CE)	MASS TRENCH EXCAVATION FOR UTILITY FACILITIES UP TO AND INCLUDING 20% (TYPE .1)	1240	C.Y.	500	620000	Unit price bid shall not be less than: $ 280.50	Required Item
bid_278	JB 410.2(CE)	MASS TRENCH EXCAVATION FOR UTILITY FACILITIES OVER 20% AND UP TO AND INCLUDING 40% (TYPE .2)	874	C.Y.	500	437000	Unit price bid shall not be less than: $ 354.75	Required Item
bid_279	JB 410.5(CE)	MASS TRENCH EXCAVATION FOR UTILITY FACILITIES UP TO AND INCLUDING 20% WITH TRENCH DEPTH EQUAL TO OR GREATER THAN FIVE FEET (TYPE .5)	500	C.Y.	500	250000	Unit price bid shall not be less than: $ 289.50	Required Item

Code	Item No.	Label	Quantity	Unit	Unit Price	Total	Price Criteria	Field type
bid_280	JB 410.6(CE)	MASS TRENCH EXCAVATION FOR UTILITY FACILITIES OVER 20% AND UP TO AND INCLUDING 40% WITH TRENCH DEPTH EQUAL TO OR GREATER THAN FIVE FEET (TYPE .6)	250	C.Y.	500	125000	Unit price bid shall not be less than: $ 363.00	Required Item
bid_281	JB 450.1(CE)	CONSTRUCTION FIELD SUPPORT - SURVEY CREW (TYPE .1)	256	CREW/HR	800	204800	Unit price bid shall not be less than: $ 274.50	Required Item
bid_282	JB 450.2(CE)	CONSTRUCTION FIELD SUPPORT - SMALL SIZE CREW (TYPE .2)	3408	CREW/HR	400	1363200	Unit price bid shall not be less than: $ 270.00	Required Item
bid_283	JB 450.3(CE)	CONSTRUCTION FIELD SUPPORT - MEDIUM SIZE CREW (TYPE .3)	5408	CREW/HR	1000	5408000	Unit price bid shall not be less than: $ 770.25	Required Item
bid_284	JB 450.5 (ECS)	CONSTRUCTION FIELD SUPPORT - PIPE RIPPING (TYPE 5)	24	CREW/HR	607.76	14586.24	Unit price bid shall not be less than: $ 607.76	Required Item
bid_285	JB 500(CE)	REMOVAL OF ABANDONED UTILITY CONDUITS (NON-CONCRETE ENCASED)	10530	L.F.	3	31590	Unit price bid shall not be less than: $ 3.00	Required Item
bid_286	JB 500.1(CE)	REMOVAL OF ABANDONED PVC CABLE TELEVISION DUCT BANKS ATTACHED TO THE PAVEMENT BASE, CONCRETE ENCASED	3510	L.F.	3	10530	Unit price bid shall not be less than: $ 3.00	Required Item

Code	Item No.	Label	Quantity	Unit	Unit Price	Total	Price Criteria	Field type
bid_287	JB 501(CE)	REMOVAL OF ABANDONED MASONRY FOR UTILITY FACILITIES	60	C.Y.	297.75	17865	Unit price bid shall not be less than: $ 297.75	Required Item
bid_288	JB 603E.1(CE)	INSTALL UTILITY CONDUITS PLACED IN FINAL POSITION WITHOUT CONCRETE ENCASEMENT	17566	L.F.	4.5	79047	Unit price bid shall not be less than: $ 4.50	Required Item
bid_289	JB 603E.2(CE)	INSTALL UTILITY CONDUITS PLACED IN FINAL POSITION WITH CONCRETE ENCASEMENT	40987	L.F.	7.5	307402.5	Unit price bid shall not be less than: $ 7.50	Required Item
bid_290	JB 610.12(CE)	12" DIAMETER STEEL GAS PIPE	460	L.F.	320	147200	Unit price bid shall not be less than: $ 66.00	Required Item
bid_291	JB 610.3(CE)	3" DIAMETER STEEL GAS PIPE	300	L.F.	215	64500	Unit price bid shall not be less than: $ 11.25	Required Item
bid_292	JB 610.4(CE)	4" DIAMETER STEEL GAS PIPE	280	L.F.	13.5	3780	Unit price bid shall not be less than: $ 13.50	Required Item
bid_293	JB 610.6(CE)	6" DIAMETER STEEL GAS PIPE	138	L.F.	26.25	3622.5	Unit price bid shall not be less than: $ 26.25	Required Item

Code	Item No.	Label	Quantity	Unit	Unit Price	Total	Price Criteria	Field type
bid_294	JB 610.8(CE)	8" DIAMETER STEEL GAS PIPE	60	L.F.	270	16200	Unit price bid shall not be less than: $ 35.25	Required Item
bid_295	JB 611.12(CE)	12" DIAMETER STEEL GAS PIPE FITTING	20	EACH	1234.5	24690	Unit price bid shall not be less than: $ 1,234.50	Required Item
bid_296	JB 611.3(CE)	3" DIAMETER STEEL GAS PIPE FITTING	6	EACH	309.75	1858.5	Unit price bid shall not be less than: $ 309.75	Required Item
bid_297	JB 611.4(CE)	4" DIAMETER STEEL GAS PIPE FITTING	6	EACH	404.25	2425.5	Unit price bid shall not be less than: $ 404.25	Required Item
bid_298	JB 611.6(CE)	6" DIAMETER STEEL GAS PIPE FITTING	14	EACH	600.75	8410.5	Unit price bid shall not be less than: $ 600.75	Required Item
bid_299	JB 611.8(CE)	8" DIAMETER STEEL GAS PIPE FITTING	4	EACH	825.75	3303	Unit price bid shall not be less than: $ 825.75	Required Item
bid_300	JB 615.12(CE)	INSTALLATION OF PLASTIC GAS PIPE - 12" DIAMETER	780	L.F.	36	28080	Unit price bid shall not be less than: $ 36.00	Required Item

Code	Item No.	Label	Quantity	Unit	Unit Price	Total	Price Criteria	Field type
bid_301	JB 615.2(CE)	INSTALLATION OF PLASTIC GAS PIPE - 2" DIAMETER	80	L.F.	9	720	Unit price bid shall not be less than: $ 9.00	Required Item
bid_302	JB 615.3(CE)	INSTALLATION OF PLASTIC GAS PIPE - 3" DIAMETER	40	L.F.	11.25	450	Unit price bid shall not be less than: $ 11.25	Required Item
bid_303	JB 615.6(CE)	INSTALLATION OF PLASTIC GAS PIPE - 6" DIAMETER	450	L.F.	17.25	7762.5	Unit price bid shall not be less than: $ 17.25	Required Item
bid_304	JB 616.12(CE)	INSTALLATION OF PLASTIC GAS PIPE FITTING - 12" DIAMETER	10	EACH	638.25	6382.5	Unit price bid shall not be less than: $ 638.25	Required Item
bid_305	JB 616.2(CE)	INSTALLATION OF PLASTIC GAS PIPE FITTING - 2" DIAMETER	4	EACH	106	424	Unit price bid shall not be less than: $ 106.00	Required Item
bid_306	JB 616.3(CE)	INSTALLATION OF PLASTIC GAS PIPE FITTING - 3" DIAMETER	3	EACH	132	396	Unit price bid shall not be less than: $ 132.00	Required Item
bid_307	JB 616.6(CE)	INSTALLATION OF PLASTIC GAS PIPE FITTING - 6" DIAMETER	16	EACH	189.75	3036	Unit price bid shall not be less than: $ 189.75	Required Item

Code	Item No.	Label	Quantity	Unit	Unit Price	Total	Price Criteria	Field type
bid_308	JB 620.12(CE)	INSTALL 24" DIAMETER STEAM PIPE	350	L.F.	346.5	121275	Unit price bid shall not be less than: $ 346.50	Required Item
bid_309	JB 621.12(CE)	INSTALL 24" DIAMETER STEAM PIPE FITTING	12	EACH	3360	40320	Unit price bid shall not be less than: $ 3,360.00	Required Item
bid_310	JB 625 B(CE)	STEAM TRAP ASSEMBLY	3	EACH	900	2700	Unit price bid shall not be less than: $ 900.00	Required Item
bid_311	JB 625 C(CE)	STEAM DRAIN ASSEMBLY	3	EACH	1072.5	3217.5	Unit price bid shall not be less than: $ 1,072.50	Required Item
bid_312	JB 625E(CE)	INSTALLATION OF STEAM ANCHOR	2	EACH	4000	8000	Unit price bid shall not be less than: $ 4,000.00	Required Item
bid_313	JB 625F(CE)	INSTALLATION OF STEAM MANHOLE	3	EACH	40000	120000	Unit price bid shall not be less than: $ 40,000.00	Required Item
bid_314	JB 636 EA(CE)	ADJUSTMENT OF UTILITY HARDWARE (UNDER 7" WIDTH)	10	EACH	265.5	2655	Unit price bid shall not be less than: $ 265.50	Required Item

Code	Item No.	Label	Quantity	Unit	Unit Price	Total	Price Criteria	Field type
bid_315	JB 636 EB(CE)	ADJUSTMENT OF UTILITY HARDWARE (7" TO UNDER 14" WIDTH)	8	EACH	302.25	2418	Unit price bid shall not be less than: $ 302.25	Required Item
bid_316	JB 636 EC(CE)	ADJUSTMENT OF UTILITY HARDWARE (14" TO UNDER 30" WIDTH)	16	EACH	769.5	12312	Unit price bid shall not be less than: $ 769.50	Required Item
bid_317	JB 636 ED(CE)	ADJUSTMENT OF UTILITY HARDWARE (30" TO UNDER 34" WIDTH)	8	EACH	774.75	6198	Unit price bid shall not be less than: $ 774.75	Required Item
bid_318	JB 636 EE(CE)	ADJUSTMENT OF UTILITY HARDWARE (34" TO UNDER 41" WIDTH)	14	EACH	893.25	12505.5	Unit price bid shall not be less than: $ 893.25	Required Item
bid_319	JB 636 EG RD (ECS)	ADJUSTMENT OF UTILITY HARDWARE (41" TO UNDER 75" WIDTH) IN ROADWAY	12	EACH	540	6480	Unit price bid shall not be less than: $ 540.00	Required Item
bid_320	JB 636 EG(CE)	ADJUSTMENT OF UTILITY HARDWARE (41" TO UNDER 75" WIDTH)	15	EACH	1021.5	15322.5	Unit price bid shall not be less than: $ 1,021.50	Required Item
bid_321	JB 636 EH(CE)	ADJUSTMENT OF UTILITY HARDWARE (75" TO UNDER 125" WIDTH)	5	EACH	1165.5	5827.5	Unit price bid shall not be less than: $ 1,165.50	Required Item

Code	Item No.	Label	Quantity	Unit	Unit Price	Total	Price Criteria	Field type
bid_322	JB 636 EI(CE)	ADJUSTMENT OF UTILITY HARDWARE (125" TO UNDER 170" WIDTH)	8	EACH	1285.5	10284	Unit price bid shall not be less than: $ 1,285.50	Required Item
bid_323	JB 636 MA(CE)	MODIFICATION OF WORK METHODS TO ACCOMMODATE UTILITY HARDWARE (UNDER 7" WIDTH)	20	EACH	48	960	Unit price bid shall not be less than: $ 48.00	Required Item
bid_324	JB 636 MB(CE)	MODIFICATION OF WORK METHODS TO ACCOMMODATE UTILITY HARDWARE (7" TO UNDER 14" WIDTH)	16	EACH	56.25	900	Unit price bid shall not be less than: $ 56.25	Required Item
bid_325	JB 636 MC(CE)	MODIFICATION OF WORK METHODS TO ACCOMMODATE UTILITY HARDWARE (14" TO UNDER 30" WIDTH)	16	EACH	64	1024	Unit price bid shall not be less than: $ 64.00	Required Item
bid_326	JB 636 MD(CE)	MODIFICATION OF WORK METHODS TO ACCOMMODATE UTILITY HARDWARE (30" TO UNDER 34" WIDTH)	16	EACH	84.75	1356	Unit price bid shall not be less than: $ 84.75	Required Item
bid_327	JB 636 ME(CE)	MODIFICATION OF WORK METHODS TO ACCOMMODATE UTILITY HARDWARE (34" TO UNDER 41" WIDTH)	24	EACH	90	2160	Unit price bid shall not be less than: $ 90.00	Required Item
bid_328	JB 636 MG(CE)	MODIFICATION OF WORK METHODS TO ACCOMMODATE UTILITY HARDWARE (41" TO UNDER 75" WIDTH)	30	EACH	96.75	2902.5	Unit price bid shall not be less than: $ 96.75	Required Item

Code	Item No.	Label	Quantity	Unit	Unit Price	Total	Price Criteria	Field type
bid_329	JB 636 MH(CE)	MODIFICATION OF WORK METHODS TO ACCOMMODATE UTILITY HARDWARE (75" TO UNDER 125" WIDTH)	10	EACH	48	480	Unit price bid shall not be less than: $ 48.00	Required Item
bid_330	JB 636 MI(CE)	MODIFICATION OF WORK METHODS TO ACCOMMODATE UTILITY HARDWARE (125" TO UNDER 170" WIDTH)	12	EACH	114	1368	Unit price bid shall not be less than: $ 114.00	Required Item
bid_331	JB 636 R(CE)	REPAIR TO UTILITY STRUCTURES	100	C.Y.	208.5	20850	Unit price bid shall not be less than: $ 208.50	Required Item
bid_332	JB 636 SA(CE)	CONCRETE COLLAR AROUND STEAM CASTINGS	648	S.F.	12.75	8262	Unit price bid shall not be less than: $ 12.75	Required Item
bid_333	JB 636 SB(CE)	ADJUSTMENT OF UTILITY STEAM CASTINGS (UNDER AND INCLUDING 8" WIDTH)	3	EACH	206.25	618.75	Unit price bid shall not be less than: $ 206.25	Required Item
bid_334	JB 636 SC(CE)	ADJUSTMENT OF UTILITY STEAM CASTINGS (ABOVE 8" TO 34" WIDTH)	4	EACH	610.5	2442	Unit price bid shall not be less than: $ 610.50	Required Item
bid_335	JB 636 SMB(CE)	MODIFICATION OF WORK METHODS TO ACCOMMODATE UTILITY STEAM HARDWARE (UNDER AND INCLUDING 8" WIDTH)	5	EACH	50	250	Unit price bid shall not be less than: $ 50.00	Required Item

Code	Item No.	Label	Quantity	Unit	Unit Price	Total	Price Criteria	Field type
bid_336	JB 636 SMC(CE)	MODIFICATION OF WORK METHODS TO ACCOMMODATE UTILITY STEAM HARDWARE (ABOVE 8" TO 34" WIDTH)	6	EACH	80	480	Unit price bid shall not be less than: $ 80.00	Required Item
bid_337	JB 638 N(CE)	INSTALLATION OF FIELD CONSTRUCTED UTILITY STRUCTURE	1020	C.Y.	978.75	998325	Unit price bid shall not be less than: $ 978.75	Required Item
bid_338	JB 638 NT(ECS)	INSTALLATION OF FIELD CONSTRUCTED TELEPHONE UTILITY STRUCTURE	15	C.Y.	2576	38640	Unit price bid shall not be less than: $ 2,576.00	Required Item
bid_339	JB 638 R(CE)	BREAK OUT AND REMOVE UTILITY STRUCTURE	850	C.Y.	780.75	663637.5	Unit price bid shall not be less than: $ 780.75	Required Item
bid_340	JB 638 R(ECS)	BREAK OUT AND REMOVE UTILITY STRUCTURE	15	C.Y.	5088.59	76328.85	Unit price bid shall not be less than: $ 5,088.59	Required Item
bid_341	JB 700(CE)	SPECIAL MODIFICATION OF WORK METHODS TO ACCOMMODATE/PROTECT UNDERGROUND FACILITIES WITH LIMITED COVER	220	C.Y.	46.5	10230	Unit price bid shall not be less than: $ 46.50	Required Item
bid_342	JB 700(ECS)	SPECIAL MODIFICATION OF WORK METHODS TO ACCOMMODATE/PROTECT UNDERGROUND FACILITIES WITH LIMITED COVER	10	C.Y.	95	950	Unit price bid shall not be less than: $ 95.00	Required Item

Code	Item No.	Label	Quantity	Unit	Unit Price	Total	Price Criteria	Field type
bid_343	JB 710.3 (CE)	REMOVAL OF ABANDONED UTILITY STEEL/CAST IRON/ PLASTIC PIPES, OVER 20" DIAMETER PIPE	150	L.F.	38.25	5737.5	Unit price bid shall not be less than: $ 38.25	Required Item
bid_344	JB 711(CE)	USE SHEETING LINE AS FORM	800	L.F.	4.5	3600	Unit price bid shall not be less than: $ 4.50	Required Item
bid_345	JB 711(ECS)	USE SHEETING LINE AS FORM	30	L.F.	6	180	Unit price bid shall not be less than: $ 6.00	Required Item
bid_346	JB 800(CE)	MODIFICATION OF TROLLEY STRUCTURE REMOVAL WHEN CROSSING UTILITY FACILITIES	280	L.F.	158.25	44310	Unit price bid shall not be less than: $ 158.25	Required Item
bid_347	JB 801(CE)	MODIFICATION OF TROLLEY STRUCTURE REMOVAL PARALLEL TO UTILITY FACILITIES	300	L.F.	147	44100	Unit price bid shall not be less than: $ 147.00	Required Item
bid_348	JB 803.1(CE)	LINE CUT BY PNEUMATIC TOOLS IN LIEU OF SAW CUT ASSOCIATED WITH ROADWAY REMOVAL (LINE CUT ASPHALT ROADWAY)	200	L.F.	8	1600	Unit price bid shall not be less than: $ 8.00	Required Item
bid_349	JB 803.2 (ECS)	LINE CUT BY PNEUMATIC TOOLS IN LIEU OF SAW CUT ASSOCIATED WITH ROADWAY REMOVAL OPERATIONS (LINE CUT ANY COMBINATION OF ASPHALT AND CONCRETE ROADWAY)	100	L.F.	15.8	1580	Unit price bid shall not be less than: $ 15.80	Required Item

Code	Item No.	Label	Quantity	Unit	Unit Price	Total	Price Criteria	Field type
bid_350	JB 803.2(CE)	LINE CUT BY PNEUMATIC TOOLS IN LIEU OF SAW CUT ASSOCIATED WITH ROADWAY REMOVAL OPERATIONS (LINE CUT ANY COMBINATION OF ASPHALT AND CONCRETE ROADWAY)	280	L.F.	9	2520	Unit price bid shall not be less than: $ 9.00	Required Item
bid_351	JB 803.3 (CE)	LINE CUT ANY COMBINATION OF ASPHALT, CONCRETE, AND BELGIUM BLOCK	420	L.F.	11	4620	Unit price bid shall not be less than: $ 11.00	Required Item
bid_352	JB 850(CE)	PLACING RUBBER SHEETS FOR UTILITY FACILITIES	200	S.F.	3	600	Unit price bid shall not be less than: $ 3.00	Required Item
bid_353	PK-227B ADA	GRANITE BLOCK ON SAND-ACCESSIBLE	354	S.F.	75	26550		Required Item
bid_354	PK-ESCR 0-05	TREE REMOVAL (0"-6" DBH)	20	EACH	200	4000		Required Item
bid_355	PK-ESCR 028 B	6” CONCRETE SIDEWALK WITH SPECIAL SCORING AND EXPOSED AGGREGATE SURFACE TREATMENT (SAW CUT TYPE JOINTS)	8000	S.F.	30	240000		Required Item
bid_356	PK-ESCR 0712	TREE REMOVAL (6" - 12" DBH)	10	EACH	425	4250		Required Item
bid_357	PK-ESCR 110 D30-36	SHRUB 30-36 IN. HEIGHT	10	EACH	115	1150		Required Item
bid_358	PK-ESCR 1318	TREE REMOVAL (12" - 18" DBH)	8	EACH	665	5320		Required Item

Code	Item No.	Label	Quantity	Unit	Unit Price	Total	Price Criteria	Field type
bid_359	PK-ESCR 149	GEOTEXTILES-SEPARATION	20	S.Y.	10	200		Required Item
bid_360	PK-ESCR 156	BICYCLE RACK "HOOP"	8	EACH	1250	10000		Required Item
bid_361	PK-ESCR 1924	TREE REMOVAL (18" - 24" DBH)	4	EACH	900	3600		Required Item
bid_362	PK-ESCR 2530	TREE REMOVAL (24" - 30" DBH)	4	EACH	1500	6000		Required Item
bid_363	PK-ESCR 3136	TREE REMOVAL (30" - 36" DBH)	4	EACH	2200	8800		Required Item
bid_364	PK-ESCR 605	4” DIA. DUCTILE IRON CEMENT WATER PIPE LINE	70	L.F.	150	10500		Required Item
bid_365	PK-ESCR 609	WET CONNECTION - 4" DIA.	2	EACH	6000	12000		Required Item
bid_366	PK-ESCR 610	GATE VALVE - MECHANICAL JOINTS - 4" DIA.	2	EACH	2800	5600		Required Item
bid_367	PK-ESCR 646	MISCELLANEOUS IRON AND STEEL	1000	LBS.	10	10000		Required Item
bid_368	PK-ESCR 674	4" DIA. HOT DIPPED/HEAVY GAUGE GALVANIZED RIGID STEEL CONDUIT	370	L.F.	165	61050		Required Item
bid_369	PK-ESCR 679	ELECTRICAL MANHOLE	2	EACH	7500	15000		Required Item
bid_370	PK-ESCR 685	500 KCMIL COPPER, 600V WIRE	655	L.F.	45	29475		Required Item
bid_371	PK-ESCR 691	BRICK MASONRY/PRECAST CONCRETE FOR DRAINAGE STRUCTURE	8	C.Y.	2000	16000		Required Item

Code	Item No.	Label	Quantity	Unit	Unit Price	Total	Price Criteria	Field type
bid_372	PK-ESCR 717	SHREDDED BARK MULCH	13	C.Y.	100	1300		Required Item
bid_373	PK-ESCR 741	PLANT STREET TREE	4	EACH	1200	4800		Required Item
bid_374	PK-ESCR 749	FOUNDATION MATERIAL FOR ASPHALT (TRUCK MEASURE)	280	C.Y.	100	28000		Required Item
bid_375	PK-ESCR 764 A	TEMPORARY WOODEN TREE GUARD	25	EACH	500	12500		Required Item
bid_376	PK-ESCR 943 A	FIXED BOLLARD TYPE 1	9	EACH	5500	49500		Required Item
bid_377	PK-ESCR 943 B	FIXED BOLLARD TYPE 2	6	EACH	5500	33000		Required Item
bid_378	PK-ESCR 943 C	SECURITY GATE	3	EACH	10000	30000		Required Item
bid_379	PK-ESCR 943 D	REMOVABLE BOLLARD	12	EACH	5500	66000		Required Item
bid_380	PK-ESCR 944	COMPOST	3	C.Y.	100	300		Required Item
bid_381	SL-20.02.02	FURNISH AND INSTALL STANDARD TYPE ANCHOR BOLT FOUNDATION, AS PER DRAWING E-3788	5	EACH	1500	7500		Required Item
bid_382	SL-20.08.01	REMOVE STANDARD TYPE ANCHOR BOLT CONCRETE FOUNDATION	5	EACH	1000	5000		Required Item
bid_383	SL-21.03.02	FURNISH AND INSTALL TYPE 2S, 4S, 6S, 8S OR 12S LAMPPOST WITH TRANSFORMER BASE	5	EACH	5700	28500		Required Item

Code	Item No.	Label	Quantity	Unit	Unit Price	Total	Price Criteria	Field type
bid_384	SL-21.09.05	REMOVE STANDARD FABRICATED STEEL, SPUN ALUMINUM NO. 10, ETC. WITH ARM(S), LUMINAIRE(S), CONTROL(S) WITH ALL ATTACHMENTS, IF ANY.	5	EACH	500	2500		Required Item
bid_385	SL-21.09.08	REMOVE ALL STREET LIGHTING EQUIPMENT FROM TYPE "M-2" TRAFFIC POST (ARM(S), PHOTOELECTRIC CONTROLLER, LUMINAIRE(S), SHAFT EXTENSION, WIRING, ETC.)	1	EACH	1000	1000		Required Item
bid_386	SL-22.06.19	FURNISH AND INSTALL MAXIMUM 150 WATT LED TYPE "TEAR DROP" LUMINAIRE	2	EACH	2300	4600		Required Item
bid_387	SL-22.16.05	FURNISH AND INSTALL ROADWAY TYPE LED FIXTURE AS PER SPECIFICATION 466 WITH PEC RECEPTACLE AND PEC	6	EACH	600	3600		Required Item
bid_388	SL-24.02.02	FURNISH AND INSTALL FABRICATED STEEL 8 Ft. ARM ON LAMPPOST OR "M-2" TRAFFIC POLE SHAFT EXTENSION.	5	EACH	1100	5500		Required Item
bid_389	SL-24.02.39	FURNISH AND INSTALL FABRICATED STEEL "DAVIT" TYPE SHAFT EXTENSION (SINGLE ARM) ARM ON M-2 TRAFFIC POST.	1	EACH	1500	1500		Required Item

Code	Item No.	Label	Quantity	Unit	Unit Price	Total	Price Criteria	Field type
bid_390	SL-24.04.04	FURNISH AND INST "M" TWIN ARMS/SHAFT EXTENSION ASSEMBLY WITH P.E.C. RECEPTACLE FOR M-2 TRAFFIC POST AS PER DWG H-5268. M-2 ORNAMENTAL CASTINGS FURNISHED AND INSTALLED BY OTHERS PER UNIT ITEM	1	EACH	16500	16500		Required Item
bid_391	SL-24.04.16	REMOVE ORNAMENTAL SHAFT EXTENSION AND ARM(S) ASSEMBLY, LUMINAIRE(S), ETC. FROM "M-2" TRAFFIC LAMPPOST	1	EACH	1500	1500		Required Item
bid_392	SL-25.01.06	FURNISH AND INSTALL FIRE ALARM BRACKET ON METAL LAMPPOST	1	EACH	600	600		Required Item
bid_393	SL-25.01.11	REMOVE FIRE ALARM LUMINAIRE AND ASSOCIATED BRACKET OR POLE CAP ADAPTER.	1	EACH	250	250		Required Item
bid_394	SL-26.06.02	FURNISH AND INSTALL LED FIRE ALARM LUMINAIRES.	1	EACH	8000	8000		Required Item
bid_395	SL-29.01.03	FURNISH, INSTALL, MAINTAIN AND REMOVE EQUIPMENT FOR TEMPORARY LIGHTING, AS PER DRAWING J-5226	60	EACH	500	30000		Required Item
bid_396	T-1.1	INSTALL TYPE "S" OR "T" FOUNDATION	6	EACH	1100	6600		Required Item
bid_397	T-1.18	REMOVE TYPE "A", "B", "S" OR "T" SERIES FOUNDATION	6	EACH	1000	6000		Required Item
bid_398	T-1.2	INSTALL TYPE "F-1" FOUNDATION	1	EACH	1300	1300		Required Item

Code	Item No.	Label	Quantity	Unit	Unit Price	Total	Price Criteria	Field type
bid_399	T-1.20	REMOVE TYPE "M" SERIES FOUNDATION	4	EACH	2900	11600		Required Item
bid_400	T-1.3	INSTALL TYPE "M2-5S" FOUNDATION	2	EACH	2300	4600		Required Item
bid_401	T-1.35	FURNISH AND INSTALL ONE TYPE ACCESSIBLE PEDESTRIAN SIGNAL (APS) FOUNDATION	2	EACH	1000	2000		Required Item
bid_402	T-1.6	INSTALL TYPE "M2-5T" FOUNDATION	1	EACH	2300	2300		Required Item
bid_403	T-2.1	INSTALL TYPE "S-1" OR "T-1" SERIES POST	8	EACH	500	4000		Required Item
bid_404	T-2.16	FURNISH, INSTALL, MAINTAIN AND REMOVE TEMPORARY POST OR PYLON WITH SIGNALS	12	EACH	2800	33600		Required Item
bid_405	T-2.2	INSTALL TYPE "S-14" POST	6	EACH	700	4200		Required Item
bid_406	T-2.22	REMOVE TYPE "S-1" OR "T-1" SERIES POST	6	EACH	500	3000		Required Item
bid_407	T-2.24	REMOVE TYPE "M" SERIES POST	3	EACH	2000	6000		Required Item
bid_408	T-2.4	INSTALL TYPE "M-2" POST	4	EACH	3700	14800		Required Item
bid_409	T-2.45	INSTALL FIVE FOOT TALL GALVANIZED STEEL ACCESSIBLE PEDESTRIAN SIGNAL (APS) POLE	2	EACH	350	700		Required Item
bid_410	T-2.48	RMV 5’ TALL GAL STEEL OR ALUM APS POLE & FDN, R	1	EACH	250	250		Required Item
bid_411	T-20000	FURNISH TEN FOOT ALUMINUM SIGNAL POST TYPE "S-1"	8	EACH	1000	8000		Required Item

Code	Item No.	Label	Quantity	Unit	Unit Price	Total	Price Criteria	Field type
bid_412	T-20001	FURNISH 5' GALVANIZED STEEL ACCESSIBLE PEDESTRIAN SIGNAL (APS) POLE	1	EACH	1100	1100		Required Item
bid_413	T-20020	a) FURNISH 3/4" ANCHOR BOLT ASSEMBLIES FOR S-1 (EACH) (3 REQUIRED PER POST)	18	EACH	125	2250		Required Item
bid_414	T-20160	FURNISH 20 FOOT SIGNAL MAST ARM POLE ASSEMBLY TYPE "M-2"	2	EACH	7500	15000		Required Item
bid_415	T-20184	a) FURNISH 5' EXTENSION ARM ASSEMBLY WITH FITTINGS	2	EACH	500	1000		Required Item
bid_416	T-20220	c) FURNISH 1-1/4" ANCHOR BOLT ASSEMBLIES FOR M-2 (EACH) (4 REQUIRED PER POST)	16	EACH	200	3200		Required Item
bid_417	T-20640	FURNISH ALUMINUM TRAFFIC SIGNAL POST TYPE "S-14"	5	EACH	1500	7500		Required Item
bid_418	T-3.1	INSTALL "ONE-WAY" SIGNAL UNIT ON MAST ARM OR TOP OF TRAFFIC POST	20	EACH	750	15000		Required Item
bid_419	T-3.12	FURNISH AND INSTALL LOUVERS ON SIGNAL UNIT	1	EACH	250	250		Required Item
bid_420	T-3.15	HOOD ONE SIGNAL HEAD	9	EACH	125	1125		Required Item
bid_421	T-3.18	REMOVE SIGNAL HEAD FROM ANY TYPE POST	8	EACH	250	2000		Required Item
bid_422	T-3.2	INSTALL "ONE-WAY" SIGNAL UNIT ON THE SHAFT OF ANY POST	4	EACH	700	2800		Required Item

Code	Item No.	Label	Quantity	Unit	Unit Price	Total	Price Criteria	Field type
bid_423	T-3.21	REMOVE PEDESTRIAN SIGNAL OR SIGN UNIT OR OTHER ILLUMINATED SIGNS FROM ANY POST	11	EACH	500	5500		Required Item
bid_424	T-3.28	INSTALL LONG VISORS ON SIGNAL UNITS	1	EACH	125	125		Required Item
bid_425	T-3.4	INSTALL "ONE-WAY" SIGNAL UNIT OR PEDESTRIAN SIGNAL ON STEEL STRUCTURE (PER FACE)	1	EACH	800	800		Required Item
bid_426	T-3.40	FURNISH AND INSTALL AUDIBLE PEDESTRIAN SIGNALS UNIT	10	EACH	1750	17500		Required Item
bid_427	T-3.6	INSTALL PEDESTRIAN SIGNAL ON ANY TYPE POST	14	EACH	750	10500		Required Item
bid_428	T-30013L	FURNISH ADJUSTABLE 3 SECTION 1-WAY, DIE CAST ALUMINUM TRAFFIC SIGNALS 8" - W/LED LENS	20	EACH	675	13500		Required Item
bid_429	T-30080	FURNISH TUNNEL-TYPE VISORS FOR 8" & 12" VEHICULAR TRAFFIC SIGNAL.	1	EACH	175	175		Required Item
bid_430	T-31150	FURNISH "1SA" ALUMINUM DIE CASTINGS AND ASSEMBLY FOR POST SIGNAL MOUNTING	5	EACH	175	875		Required Item
bid_431	T-31175	b) "2SPA"	2	EACH	305	610		Required Item
bid_432	T-31200	e) "VB" ASSEMBLY *ASSEMBLY IS EQUAL TO ONE PAIR	6	EACH	175	1050		Required Item
bid_433	T-31205	FURNISH MAST ARM SIGNAL MOUNTING ASSEMBLY - a) "1MS"	1	EACH	275	275		Required Item

Code	Item No.	Label	Quantity	Unit	Unit Price	Total	Price Criteria	Field type
bid_434	T-31210	h) "HUB" ASSEMBLY *ASSEMBLY IS EQUAL TO ONE PAIR	13	EACH	85	1105		Required Item
bid_435	T-31215	b) "2MS"	1	EACH	350	350		Required Item
bid_436	T-31225	c) "3MS"	1	EACH	350	350		Required Item
bid_437	T-31245	FURNISH RIGID MOUNT SIGNAL BRACKETS	2	EACH	425	850		Required Item
bid_438	T-31340	f) "VB-P" ASSEMBLY *ASSEMBLY IS EQUAL TO ONE PAIR	10	EACH	135	1350		Required Item
bid_439	T-31351	g) "VB-2P" ASSEMBLY *ASSEMBLY IS EQUAL TO ONE PAIR	2	EACH	350	700		Required Item
bid_440	T-31500AL	FURNISH 12" LENS & SIGNAL SECTION (LED AMBER ARROWS)	2	EACH	275	550		Required Item
bid_441	T-31500GL	FURNISH 12" LENS & SIGNAL SECTION (LED GREEN ARROWS)	2	EACH	275	550		Required Item
bid_442	T-31500RL	FURNISH 12" LENS & SIGNAL SECTION (LED RED ARROW)	4	EACH	275	1100		Required Item
bid_443	T-31501-RA	FURNISH 12 INCH RED ARROW LED (AS PER ITE SPECIFICATION 1/1/98)	2	EACH	100	200		Required Item
bid_444	T-31600L	FURNISH 12" TRAFFIC SIGN (RED, AMBER, GREEN) LED BICYCLE SIGNAL.	6	EACH	1350	8100		Required Item
bid_445	T-33001-L	FURNISH POLYCARBONATE PEDESTRIAN SIGNAL (16 X 16) W/LED COUNT LENS (SPECIFICATION A-L)	14	EACH	505	7070		Required Item

Code	Item No.	Label	Quantity	Unit	Unit Price	Total	Price Criteria	Field type
bid_446	T-33002	FURNISH AUDIBLE PEDESTRIAN SIGNAL UNIT	8	EACH	675	5400		Required Item
bid_447	T-4.22	INSTALL ANY TYPE OF ADVANCED SOLID STATE TRAFFIC SIGNAL CONTROLLER AND CABINET ON METAL POLE	3	EACH	1850	5550		Required Item
bid_448	T-4.4	INSTALL CONTROL BOX ON ANY POST	1	EACH	925	925		Required Item
bid_449	T-4.8	REMOVE ONE CONTROL BOX AND CONTROLLER FROM ANY POST OR SUPPORT	2	EACH	925	1850		Required Item
bid_450	T-5.14	SAW CUT ROADWAY	160	L.F.	10	1600		Required Item
bid_451	T-5.34	RESTORING PERMANENT SIDEWALK	180	S.F.	290	52200		Required Item
bid_452	T-5.49	FURNISH AND INSTALL ADDITIONAL 2" HDPE CONDUIT	140	L.F.	50	7000		Required Item
bid_453	T-5.50	FURNISH AND INSTALL 2" HDPE UNDERGROUND CONDUIT IN PAVED ROADWAY	330	L.F.	50	16500		Required Item
bid_454	T-5.51	FURNISH AND INSTALL 2" HDPE UNDERGROUND CONDUIT IN PAVED SIDEWALK	110	L.F.	50	5500		Required Item
bid_455	T-5.52	FURNISH AND INSTALL 2" HDPE UNDERGROUND CONDUIT IN UNPAVED AREA	60	L.F.	50	3000		Required Item
bid_456	T-5.54	PERMANENT RESTORATION OF PAVED ROADWAY	480	L.F.	100	48000		Required Item

Code	Item No.	Label	Quantity	Unit	Unit Price	Total	Price Criteria	Field type
bid_457	T-5.57	FURNISH AND INSTALL 1-1/4" HDPE UNDERGROUND CONDUIT IN PAVED ROADWAY	40	L.F.	35	1400		Required Item
bid_458	T-6.1	INSTALL CABLE (INCLUDES OVERHEAD)	710	L.F.	10	7100		Required Item
bid_459	T-6.10	REMOVE CABLE (INCLUDES OVERHEAD)	2000	L.F.	5	10000		Required Item
bid_460	T-6.2	INSTALL MULTIPLE CABLE (INCLUDES OVERHEAD)	2000	L.F.	15	30000		Required Item
bid_461	T-60000B	FURNISH 2 c # 10B (BREAKDOWN = 2#10 WITH 3RD WIRE FOR GROUNDING).	1100	L.F.	3	3300		Required Item
bid_462	T-60040	c) 7 CONDUCTOR, 14 A.W.G.	1600	L.F.	3	4800		Required Item
bid_463	T-60190	e) 13 CONDUCTOR, 14 A.W.G.	2400	L.F.	6	14400		Required Item
bid_464	T-60200	FURNISH AND INSTALL AUDIBLE PEDESTRIAN SIGNALS CABLE	500	L.F.	12	6000		Required Item
bid_465	T-7.45	REMOVE PEDESTRIAN PUSHBUTTON AND PUSHBUTTON SIGN	2	EACH	125	250		Required Item
bid_466	T-8.8	INSTALL CONCRETE PYLON	11	EACH	925	10175		Required Item
bid_467	T-8.9	REMOVE CONCRETE PYLON	10	EACH	925	9250		Required Item
bid_468	T-81000	FURNISH CONCRETE PYLON	9	EACH	1150	10350		Required Item

Code	Item No.	Label	Quantity	Unit	Unit Price	Total	Price Criteria	Field type
bid_469	UTL-6.01.1 (CE)	GAS MAIN CROSSING SEWER UP TO 24" IN DIAMETER (S6.01)	11	EACH	1040	11440	Unit price bid shall not be less than: $ 1,040.00	Required Item
bid_470	UTL-6.01.9 (CE)	GAS MAIN CROSSING WATER MAIN UP TO 20" IN DIAMETER (S6.01)	8	EACH	485	3880	Unit price bid shall not be less than: $ 485.00	Required Item
bid_471	UTL-6.02 (CE)	EXTRA EXCAVATION FOR THE INSTALLATION OF CATCH BASIN SEWER DRAIN PIPES WITH GAS INTERFERENCES (S6.02)	4	EACH	715	2860	Unit price bid shall not be less than: $ 715.00	Required Item
bid_472	UTL-6.03 (CE)	REMOVAL OF ABANDONED GAS FACILITIES. ALL SIZES. (S6.03)	2200	L.F.	15	33000	Unit price bid shall not be less than: $ 15.00	Required Item
bid_473	UTL-6.03.1A (CE)	REMOVAL OF ABANDONED GAS FACILITIES WITH POSSIBLE COAL TAR WRAP. ALL SIZES. (FOR CON EDISON WORK ONLY) (S6.03)	640	L.F.	25	16000	Unit price bid shall not be less than: $ 25.00	Required Item
bid_474	UTL-6.04 (CE)	ADJUST HARDWARE TO GRADE USING SPACER RINGS/ADAPTORS. (STREET REPAVING.) (S6.04)	20	EACH	35	700	Unit price bid shall not be less than: $ 35.00	Required Item
bid_475	UTL-6.05 (CE)	ADJUST HARDWARE TO GRADE BY RESETTING. (ROAD RECONSTRUCTION.) (S6.05)	20	EACH	65	1300	Unit price bid shall not be less than: $ 65.00	Required Item

Code	Item No.	Label	Quantity	Unit	Unit Price	Total	Price Criteria	Field type
bid_476	UTL-6.06 (CE)	SPECIAL CARE EXCAVATION AND BACKFILLING (S6.06)	420	C.Y.	180	75600	Unit price bid shall not be less than: $ 180.00	Required Item
bid_477	UTL-6.07 (CE)	TEST PITS FOR GAS FACILITIES (S6.07)	180	C.Y.	100	18000	Unit price bid shall not be less than: $ 100.00	Required Item
bid_478	UTL-6.08A (CE)	PIER AND/OR PLATE METHOD OF PROTECTION FOR DUCTILE IRON WATER MAIN WITH LESS THAN 24" COVER (S6.08A)	2	EACH	5800	11600	Unit price bid shall not be less than: $ 5,800.00	Required Item
bid_479	UTL-6.09 (CE)	TRENCH EXCAVATION AND BACKFILL FOR GAS MAINS AND SERVICES. GAS INSTALLED BY OTHERS (FOR CON EDISON WORK ONLY). (S6.09)	1891	C.Y.	190	359290	Unit price bid shall not be less than: $ 190.00	Required Item

Code	Item No.	Label	Unit	Allowance Amount	YOU MUST ENTER 1 IN THE BOXES BELOW	Field type
fs_1	6.52 FED	UNIFORMED FLAGPERSON	F.S.	260000	1	Additional Fees
fs_2	6.85 A	TRAFFIC ENFORCEMENT AGENTS	F.S.	715773	1	Additional Fees
fs_3	698.05	FUEL PRICE ADJUSTMENT	F.S.	25000	1	Additional Fees
fs_4	698.06	STEEL/IRON PRICE ADJUSTMENT	F.S.	250000	1	Additional Fees
fs_5	9.06 HW	ALLOWANCE FOR DECORATIVE MESH FABRIC	F.S.	150000	1	Additional Fees
fs_6	HW-900H	ALLOWANCE FOR CITY WORK ACCELERATION	F.S.	750000	1	Additional Fees
fs_7	HW-908	ALLOWANCE FOR EXTRA WORK DUE TO ARCHAEOLOGICAL DISCOVERIES	F.S.	1000000	1	Additional Fees
fs_8	JB 900(CE)	EXTRA UTILITY WORK COSTS ALLOWANCE	F.S.	4030000	1	Additional Fees
fs_9	JB 900(ECS)	EXTRA UTILITY WORK COSTS ALLOWANCE	F.S.	110000	1	Additional Fees
fs_10	UTL-GCS-2WS (CE)	GAS INTERFERENCES AND ACCOMMODATIONS	F.S.	100000	1	Additional Fees

Code	Item No.	Label	Quantity	Unit	Unit Price	Total	Price Criteria	Field type
mob_1	6.39 B	MOBILIZATION	1	L.S.	11478843.61	11478843.61	BID PRICE OF MOBILIZATION SHALL NOT EXCEED 8% OF THE ABOVE SUB-TOTAL PRICE.	Required Item

Department of Design and Construction

THE CITY OF NEW YORK
DEPARTMENT OF DESIGN AND CONSTRUCTION
DIVISION OF INFRASTRUCTURE
30-30 THOMSON AVENUE
LONG ISLAND CITY, NY, 11101
TEL: 718.391.1000
WEB: www.nyc.gov/ddc

DDC SPONSOR AGENCY:

NEW YORK CITY DEPARTMENT OF PARKS AND RECREATION

PREPARED BY:

AKRF / KSE JV

DATE PREPARED:

July 20, 2020

VOLUME 2 OF 3

FOR FURNISHING ALL LABOR AND MATERIALS NECESSARY AND REQUIRED FOR:

PROJECT ID: SANDRESPC

INFORMATION FOR BIDDERS
CONTRACT
PERFORMANCE AND PAYMENT BONDS
PREVAILING WAGE SCHEDULE

FOR FURNISHING ALL LABOR AND MATERIALS NECESSARY AND REQUIRED FOR:

EAST SIDE COASTAL RESILENCY FROM MONTGOMERY STREET TO EAST 25TH STREET

SEWER WORK, INTERCEPTOR GATES AND GATE HOUSES, STREET LIGHTING, AND TRAFFIC WORK

TOGETHER WITH ALL WORK INCIDENTAL THERETO

BOROUGH OF MANHATTAN

CITY OF NEW YORK

HUD FUNDED

CITY OF NEW YORK

DEPARTMENT OF DESIGN AND CONSTRUCTION

INFORMATION FOR BIDDERS

December 2021

THIS PAGE INTENTIONALLY LEFT BLANK

CITY OF NEW YORK
DEPARTMENT OF DESIGN AND CONSTRUCTION

INFORMATION FOR BIDDERS

TABLE OF CONTENTS

1.	Description and Location of Work	1
2.	Time and Place for Receipt of Bids	1
3.	Definitions	1
4.	Invitation For Bids and Contract Documents	1
5.	Pre-Bid Conference	1
6.	Agency Contact	1
7.	Bidder's Oath	1
8.	Examination and Viewing of Site, Consideration of Other Sources of Information and Changed Conditions	2
9.	Examination of Proposed Contract	2
10.	Form of Bid	2
11.	Irrevocability of Bid	3
12.	Acknowledgment of Amendments	3
13.	Bid Samples and Descriptive Literature	3
14.	Proprietary Information/Trade Secrets	3
15.	Pre-Opening Modification or Withdrawal of Bids	3
16.	Bid Evaluation and Award	3
17.	Late Bids, Late Withdrawals and Late Modifications	3
18.	Withdrawal of Bids.	3
19.	Mistake in Bids	4
20.	Low Tie Bids	4
21.	Rejection of Bids	5
22.	Right to Appeal Determinations of Non-Responsiveness or Non-Responsibility and Right to Protest Solicitations and Award	5
23.	Affirmative Action and Equal Employment Opportunity	5
25.	Complaints About the Bid Process	6
26.	Bid, Performance and Payment Security	6
27.	Failure to Execute Contract	7
28.	Bidder Responsibilities and Qualifications	7
29.	Employment Report	7
30.	Labor Law Requirements	8
31.	Insurance	8
32.	Lump Sum Contracts	8
33.	Unit Price Contracts	8

34. Excise Tax 9
35. Licenses and Permits 9
36. Multiple Prime Contractors 9
37. Locally Based Enterprise Requirements (LBE) 9
38. Bid Submission Requirements 11
39. Comptroller's Certificate 11
40. Procurement Policy Board Rules 11
41. DDC Safety Requirements 11

1. Description and Location of Work

The description and location of the work for which bids are requested are specified in the PASSPort RFx field "Description".

2. Time and Place for Receipt of Bids

Sealed bids shall be received on or before the date and hour specified in the PASSPort RFx, at which time they will be publicly opened and read aloud in the presence of the Commissioner or the Commissioner's or her representative, and any bidders who may desire to be present.

3. Definitions

The definitions set forth in the Procurement Policy Board Rules shall apply to this Invitation For Bids.

4. Invitation For Bids and Contract Documents

(A) Except for titles, sub-titles, headings, running headlines, tables of contents and indices (all of which are printed herein merely for convenience) the following, except for such portions thereof as may be specifically excluded, shall be deemed to be part of the Contract and the Invitation for Bids.

(1) All provisions required by law to be inserted in this Contract, whether actually inserted or not

(2) The Contract Drawings and Specifications

(3) The General Conditions, the General Requirements and the Special Conditions, if any

(4) The Contract

(5) The Information for Bidders; Request for Proposals; Notice of Solicitation and Proposal For Bids; Bid or Proposal, and the Bid Booklet

(6) The Budget Director's Certificate; all Addenda issued prior to the receipt of the bids; the Notice of Award; Performance and Payment Bonds, if required; and the Notice to Proceed with the Work.

(B) For particulars as to this procurement, including quantity and quality of the purchase, extent of the work or labor to be performed, delivery and performance schedule, and any other special instructions, prospective bidders are referred to the Invitation For Bids Documents. A copy of such documents can be obtained in the PASSPort RFx.

5. Pre-Bid Conference

A pre-bid conference shall be held as set forth in the PASSPort RFx. Nothing stated at the pre-bid conference shall change the terms or conditions of the Invitation For Bids Documents, unless a change is made by written amendment as provided in Section 9 below. Failure to attend a mandatory pre-bid conference shall constitute grounds for the rejection of the bid.

6. Agency Contact

Any questions or correspondence relating to this bid solicitation shall be addressed to the Agency Contact person specified in the PASSPort RFx.

7. Bidder's Oath

(A) The bid shall be properly signed by an authorized representative of the bidder and the bid shall be verified by the written oath of the authorized representative who signed the bid, that the several matters stated and information furnished therein are in all aspects true.

(B) A materially false statement willfully or fraudulently made in connection with the bid or any of the forms completed and submitted with the bid may result in the termination of any Contract between the City and the Bidder. As a result, the Bidder may be barred from participating in future City contracts as well as be subject to possible criminal prosecution.

8. Examination and Viewing of Site, Consideration of Other Sources of Information and Changed Conditions

(A) Pre-Bidding (Investigation) Viewing of Site - Bidders must carefully view and examine the site of the proposed work, as well as its adjacent area, and seek other usual sources of information, for they will be conclusively presumed to have full knowledge of any and all conditions on, about or above the site relating to or affecting in any way the performance of the work to be done under the Contract which were or should have been indicated to a reasonably prudent bidder. To arrange a date for visiting the work site, bidders are to contact the Agency Contact person specified in The PASSPort RFx.

(B) Should the contractor encounter during the progress of the work subsurface conditions at the site materially differing from any shown on the Contract Drawings or indicated in the Specifications or such subsurface conditions as could not reasonably have been anticipated by the contractor and were not anticipated by the City, which conditions will materially affect the cost of the work to be done under the Contract, the attention of the Commissioner must be called immediately to such conditions before they are disturbed. The Commissioner shall thereupon promptly investigate the conditions. If the Commissioner finds that they do so materially differ, or that they could not reasonably have been anticipated by the contractor and were not anticipated by the City, the Contract may be modified with the Commissioner's written approval.

9. Examination of Proposed Contract

(A) Request for Interpretation or Correction: Prospective bidders must examine the Contract Documents carefully and before bidding must request the Commissioner in writing for an interpretation or correction of every patent ambiguity, inconsistency or error therein which should have been discovered by a reasonably prudent bidder. Such interpretation or correction, as well as any additional contract provisions the Commissioner may decide to include, will be issued in writing by the Commissioner as an addendum to the Contract, which will be transmitted to each person recorded as having received a copy of the Contract Documents from the Department. Transmission of such addendum will be by mail, e-mail, facsimile or hand delivery. Such addendum will also be posted at the place where the Contract Documents are available for the inspection of prospective bidders. Upon transmission as provided for herein, such addendum shall become a part of the Contract Documents, and binding on all bidders, whether or not actual notice of such addendum is shown.

(B) Only Commissioner's Interpretation or Correction Binding: Only the written interpretation or correction so given by the Commissioner shall be binding, and prospective bidders are warned that no other officer, agent or employee of the City is authorized to give information concerning, or to explain or interpret, the Contract.

(C) Documents given to a subcontractor for the purpose of soliciting the subcontractor's bid shall include either a copy of the bid cover sheet or a separate information sheet setting forth the project name, the Contract number (if available), the contracting agency and the Project's location.

10. Form of Bid

Each bid must be submitted upon the prescribed form and must contain: a) the name, residence and place of business of the person or persons making the same; b) the names of all persons interested therein, and if no other person is so interested, such fact must be distinctly stated; c) a statement to the effect that it is made without any connection with any other person making a bid for the same purpose and that it is in all respects fair and without collusion or fraud; d) a statement that no Council member or other officer or employee or person whose salary is payable in whole or part from the City Treasury is directly or indirectly interested therein or in the supplies, materials or equipment and work or labor to which it relates, or in any portion of the profits thereof; e) a statement that the bidder is not in arrears to the City or to any agency upon a debt or contract or taxes, and is not a defaulter as surety or otherwise upon any obligation to the City to any agency thereof, except as set forth in the bid.

THE BID SHALL BE TYPEWRITTEN OR WRITTEN LEGIBLY IN INK. THE BID SHALL BE SIGNED IN INK. ERASURES OR ALTERATIONS SHALL BE INITIALED BY THE SIGNER IN INK. FAILURE TO CONFORM TO THE REQUIREMENTS OF THIS SECTION 10 SHALL RESULT IN THE REJECTION OF THE BID.

11. Irrevocability of Bid

The prices set forth in the bid cannot be revoked and shall be effective until the award of the Contract, unless the bid is withdrawn as provided for in Sections 15 and 18 below.

12. Acknowledgment of Amendments

The receipt of any amendment to the Contract Documents shall be acknowledged by the bidder in its bid submission.

13. Bid Samples and Descriptive Literature

Bid samples and descriptive literature shall not be submitted by the bidder, unless expressly requested elsewhere in the Contract or Contract Documents. Any unsolicited bid samples or descriptive literature which are submitted shall not be examined or tested and shall not be deemed to vary any of the provisions of this Contract.

14. Proprietary Information/Trade Secrets

(A) The bidder shall identify those portions of the bid which it deems to be confidential, proprietary information or trade secrets, and provide justification why such materials shall not be disclosed by the City. All such materials shall be clearly indicated by stamping the pages on which such information appears, at the top and bottom thereof with the word "Confidential". Such materials stamped "Confidential" must be easily separable from the non-confidential sections of the bid.

(B) All such materials so indicated shall be reviewed by the Agency and any decision not to honor a request for confidentiality shall be communicated in writing to the bidder. For those bids which are unsuccessful, all such confidential materials shall be returned to the bidder. Prices, makes and model or catalog numbers of the items offered, deliveries, and terms of payment shall be publicly available after bid opening, regardless of any designation of confidentiality made by the bidder.

15. Pre-Opening Modification or Withdrawal of Bids

Bids may be modified or withdrawn by written notice received in the office designated in the PASSPort RFx, before the time and date set for the bid opening. If a bid is withdrawn in accordance with this Section, the bid security, if any, shall be returned to the bidder.

16. Bid Evaluation and Award

In accordance with the New York City Charter, the Procurement Policy Board Rules and the terms and conditions of this Invitation For Bids, this Contract shall be awarded, if at all, to the responsible bidder whose bid meets the requirements and evaluation criteria set forth in the Invitation For Bids, and whose bid price is either the most favorable bid price or, if the Invitation For Bids so states, the most favorable evaluated bid price. A bid may not be evaluated for any requirement or criterion that is not disclosed in the Invitation For Bids.

Restriction: No negotiations with any bidder shall be allowed to take place except under the circumstances and in the manner set forth in Section 21. Nothing in this Section shall be deemed to permit a contract award to a bidder submitting a higher quality item than that designated in the Invitation For Bids, if that bid is not also the most favorable bid.

17. Late Bids, Late Withdrawals and Late Modifications

Any bid received at the place designated in the solicitation after the time and date set for receipt of bids is late and shall not be considered. Any request for withdrawal or modification received at the place designated in the solicitation after the time and date set for receipt of bids is late and shall not be considered. The exception to this provision is that a late modification of a successful bid that makes the bid terms more favorable to the City shall be considered at any time it is received.

18. Withdrawal of Bids.

Except as provided for in Section 15, above, a bidder may not withdraw its bid before the expiration of forty-five (45) days after the date of the opening of bids; thereafter, a bidder may withdraw its bid only in writing and in advance of an actual award. If within sixty (60) days after the execution of the Contract, the Commissioner fails to fix the date

for commencement of work by written notice to the bidder, the bidder at the bidder's option, may ask to be relieved of the bidder's obligation to perform the work called for by written notice to the Commissioner. If such notice is given to the Commissioner, and the request to withdraw is granted, the bidder waives all claims in connection with this Contract.

19. Mistake in Bids

(A) Mistake Discovered Before Bid Opening: A bidder may correct mistakes discovered before the time and date set for bid opening by withdrawing or correcting the bid as provided in Section 15 above.

(B) Mistakes Discovered Before Award

(1) In accordance with General Municipal Law (Section 103, subdivision 11), where a unilateral error or mistake is discovered in a bid, such bid may be withdrawn upon written approval of the Agency Chief Contracting Officer if the following conditions are met:

(a) The mistake is known or made known to the agency prior to the awarding of the Contract or within 3 days after the opening of the bid, whichever period is shorter; and

(b) The price bid was based upon an error of such magnitude that enforcement would be unconscionable; and

(c) The bid was submitted in good faith and the bidder submits credible evidence that the mistake was a clerical error as opposed to a judgment error; and

(d) The error in the bid is actually due to an unintentional and substantial arithmetic error or an unintentional omission of a substantial quantity of work, labor, material or services made directly in the compilation of the bid, which unintentional arithmetic error or unintentional omission can be clearly shown by objective evidence drawn from inspection of the original work paper, documents, or materials used in the preparation of the bid sought to be withdrawn; and

(e) It is possible to place the agency in the same position as existed prior to the bid.

(2) Unless otherwise required by law, the sole remedy for a bid mistake in accordance with this Article shall be withdrawal of the bid, and the return of the bid bond or other security, if any, to the bidder. Thereafter, the agency may, in its discretion, award the Contract to the next lowest bidder or rebid the Contract. Any amendment to or reformation of a bid or a Contract to rectify such an error or mistake therein is strictly prohibited.

(3) If the mistake and the intended correct bid are clearly evident on the face of the bid document, the bid shall be corrected to the intended correct bid and may not be withdrawn. Examples of mistakes that may be corrected are typographical errors, errors in extending unit prices, transposition errors and arithmetical errors.

20. Low Tie Bids

(A) When two or more low responsive bids from responsible bidders are identical in price, meeting all the requirements and criteria set forth in the Invitation For Bids, the Agency Chief Contracting Officer will break the tie in the following manner and order of priority:

(1) Award to a certified New York City small, minority or woman-owned business entity bidder;

(2) Award to a New York City bidder;

(3) Award to a certified New York State small, minority or woman-owned business bidder;

(4) Award to a New York State bidder.

(B) If two or more bidders still remain equally eligible after application of paragraph (A) above, award shall be made by a drawing by lot limited to those bidders. The bidders involved shall be invited to attend the drawing. A witness shall be present to verify the drawing and shall certify the results on the bid tabulation sheet.

21. Rejection of Bids

(A) Rejection of Individual Bids: The Agency may reject a bid if:

(1) The bidder fails to furnish any of the information required pursuant to Section 24 or 28 hereof; or if

(2) The bidder is determined to be not responsible pursuant to the Procurement Policy Board Rules; or if

(3) The bid is determined to be non-responsive pursuant to the Procurement Policy Board Rules; or if

(4) The bid, in the opinion of the Agency Chief Contracting Officer, contains unbalanced bid prices and is thus non-responsive, unless the bidder can show that the prices are not unbalanced for the probable required quantity of items, or if the imbalance is corrected pursuant to Section 15.

(B) Rejection of All Bids: The Agency, upon written approval by the Agency Chief Contracting Officer, may reject all bids and may elect to resolicit bids if in its sole opinion it shall deem it in the best interest of the City so to do.

(C) Rejection of All Bids and Negotiation With All Responsible Bidders: The Agency Head may determine that it is appropriate to cancel the Invitation For Bids after bid opening and before award and to complete the acquisition by negotiation. This determination shall be based on one of the following reasons:

(1) All otherwise acceptable bids received are at unreasonable prices, or only one bid is received and the Agency Chief Contracting Officer cannot determine the reasonableness of the bid price, or no responsive bid has been received from a responsible bidder; or

(2) In the judgment of the Agency Chief Contracting Officer, the bids were not independently arrived at in open competition, were collusive, or were submitted in bad faith.

(B) When the Agency has determined that the Invitation for Bids is to be canceled and that use of negotiation is appropriate to complete the acquisition, the contracting officer may negotiate and award the Contract without issuing a new solicitation, subject to the following conditions:

(1) prior notice of the intention to negotiate and a reasonable opportunity to negotiate have been given by the contracting officer to each responsible bidder that submitted a bid in response to the Invitation for Bids;

(2) the negotiated price is the lowest negotiated price offered by a responsible bidder; and

(3) the negotiated price is lower than the lowest rejected bid price of a responsible bidder that submitted a bid in response to the Invitation for Bids.

22. Right to Appeal Determinations of Non-Responsiveness or Non-Responsibility and Right to Protest Solicitations and Award

The bidder has the right to appeal a determination of non-responsiveness or non-responsibility and has the right to protest a solicitation and award. For further information concerning these rights, the bidder is directed to the Procurement Policy Board Rules.

23. Affirmative Action and Equal Employment Opportunity

This Invitation For Bids is subject to applicable provisions of Federal, State and Local Laws and executive orders requiring affirmative action and equal employment opportunity.

24. PASSPort COMPLIANCE

All vendors that intend to do business with the City of New York must complete a disclosure process in order to be considered for a contract. This disclosure process was formerly completed using Vendor Information Exchange System (VENDEX) paper-based forms. The City of New York has moved collection of vendor disclosure information online. In early August 2017, the New York City Mayor's Office of Contract Services (MOCS) launched the Procurement and Sourcing Solutions Portal (PASSPort), a new online procurement system that replaced the paper-VENDEX process. In anticipation of awards, all bidders must create online accounts in the new PASSPort system, and

file all disclosure information using PASSPort. Paper submissions, including certifications of no changes to existing VENDEX packages, will not be accepted in lieu of complete online filings using PASSPort.

All vendors that intend to do business with the City, but specifically those that fall into any of the following categories, are required to enroll:

- Have a pending award with a City Agency; or
- Hold a current contract with a City Agency and have either an expiring VENDEX or expiring Certificate of No Change.

The Department of Design and Construction (DDC) and MOCS hereby notifies all proposers that the PASSPort system is available, and that disclosure filing completion is required prior to any award through this competitive bid.

To enroll in PASSPort and to access the PASSPort website (including online training), please visit www.nyc.gov/passport. Contact MOCS at passport@mocs.nyc.gov for additional information and technical support.

25. Complaints About the Bid Process

The New York City Comptroller is charged with the audit of contracts in New York City. Any vendor who believes that there has been unfairness, favoritism or impropriety in the bid process should inform the Comptroller, Office of Contract Administration, One Centre Street, Room 835, New York, New York; telephone number (212)669-2323.

26. Bid, Performance and Payment Security

(A) Bid Security: Each bid must be accompanied by bid security in an amount and type specified in the PASSPort RFx questionnaire. The bid security shall assure the City of New York of the adherence of the bidder to its proposal, the execution of the Contract, and the furnishing of Performance and Payment Bonds by the bidder, if required in the PASSPort RFx. Bid security shall be returned to the bidder as follows:

(1) Within ten (10) days after the bid opening, the Comptroller will be notified to return the deposits of all but the three (3) lowest bidders. Within five (5) days after the award, the Comptroller will be notified to return the deposits of the remaining two unsuccessful bidders.

(2) Within five (5) days after the execution of the Contract and acceptance of the Contractor's bonds, the Comptroller will be notified to return the bid security of the successful bidder or, if performance and payment bonds are not required, only after the sum retained under Article 21 of the Contract equals the amount of the bid security.

(3) Where all bids are rejected, the Comptroller will be notified to return the deposit of the three (3) lowest bidders at the time of rejection.

(B) Performance and Payment Security: Performance and Payment Security must be provided in an amount and type specified in the PASSPort RFx. The performance and payment security shall be delivered by the contractor prior to or at the time of execution of the Contract. If a contractor fails to deliver the required performance and payment security, its bid security shall be enforced, and an award of Contract may be made to the next lowest responsible and responsive bidder, or the contract may be rebid.

(C) Acceptable Types of Security: Acceptable types of security for bids, performance, and payment shall be limited to the following:

(1) a one-time bond in a form satisfactory to the City;

(2) a bank certified check or money order;

(3) obligations of the City of New York; or

(4) other financial instruments as determined by the Office of Construction in consultation with the Comptroller.

Whenever the successful bidder deposits obligations of the City of New York as performance and payment security, the Comptroller may sell and use the proceeds thereof for any purpose for which the principal or

surety on such bond would be liable under the terms of the Contract. If the money is deposited with the Comptroller, the successful bidder shall not be entitled to receive interest on such money from the City.

(D) Form of Bonds: Security provided in the form of bonds must be prepared on the form of bonds authorized by the City of New York. Forms for bid, performance, and payment bonds are included in the Invitation for Bids Documents. Such bonds must have as surety thereunder such surety company or companies as are: (1) approved by the City of New York; (2) authorized to do business in the State of New York, and (3) approved by the Department of the Treasury of the United States. Premiums for any required bonds must be included in the base bid.

The bidder is advised that submission of a bid bond where the surety on such bond fails to meet the criteria set forth herein, shall result in the rejection of the bid as non-responsive.

The Department of the Treasury of the United States advises that information concerning approved surety companies may be obtained as follows: (1) from the Government Printing Office at 215-364-6465; (2) through the Internet at https://www.fiscal.treasury.gov/surety-bonds/.

(E) Power of Attorney: Attorneys in fact who sign bid, performance, or payment bonds must file with each bond a certified copy of their power of attorney to sign said bonds.

27. Failure to Execute Contract

In the event of failure of the successful bidder to execute the Contract and furnish the required security within ten (10) days after notice of the award of the Contract, the deposit of the successful bidder or so much thereof as shall be applicable to the amount of the award made shall be retained by the City, and the successful bidder shall be liable for and hereby agrees to pay on demand the difference between the price bid and the price for which such Contract shall be subsequently awarded, including the cost of any required reletting and less the amount of such deposit. No plea of mistake in such accepted bid shall be available to the bidder for the recovery of the deposit or as a defense to any action based upon such accepted bid. Further, should the bidder's failure to comply with this Section cause any funding agency, body or group (Federal, State, City, Public, Private, etc.) to terminate, cancel or reduce the funding on this project, the bidder in such event shall be liable also to the City for the amount of actual funding withdrawn by such agency on this project, less the amount of the forfeited deposit.

28. Bidder Responsibilities and Qualifications

(A) Bidders must include with their bids all information necessary for a determination of bidder responsibility, as set forth in the Specifications.

(B) The Agency may require any bidder or prospective bidder to furnish all books of account, records, vouchers, statements or other information concerning the bidder's financial status for examination as may be required by the Agency to ascertain the bidder's responsibility and capability to perform the Contract. If required, a bidder must also submit a sworn statement setting forth such information as the Agency may require concerning present and proposed plant and equipment, the personnel and qualifications of the bidder’s working organizations, prior experience and performance record.

(C) Oral Examination on Qualifications: In addition thereto, and when directed by the Agency, the bidder, or a responsible officer, agent or employee of the bidder, must submit to an oral examination to be conducted by the Agency in relation to the bidder’s proposed tentative plan and schedule of operations, and such other matters as the Agency may deem necessary in order to determine the bidder's ability and responsibility to perform the work in accordance with the Contract. Each person so examined must sign and verify a stenographic transcript of such examination noting thereon such corrections as such person may desire to make.

(D) If the bidder fails or refuses to supply any of the documents or information set forth in paragraph (B) hereof or fails to comply with any of the requirements thereof, the Agency may reject the bid.

29. Employment Report

In accordance with Executive Order No. 50 (1980) as modified by Executive Order 108 (1986), the filing of a

completed Employment Report (ER) is a requirement of doing business with the City of New York for construction contractors with contracts of $1,000,000 or more and subcontractors with construction subcontracts of $750,000 or more. The required forms and information are included in the PASSPort Vendor Profile.

30. Labor Law Requirements

(A) General: The successful bidder will be required to comply strictly with all Federal, State and local labor laws and regulations.

(B) New York State Labor Law: This Contract is subject to New York State Labor Law Section 220, which requires that construction workers on the site be paid prevailing wages and supplements. The Contractor is reminded that all wage provisions of this Contract will be enforced strictly and failure to comply will be considered when evaluating performance. Noncompliance may result in the contractor being debarred by the City from future contracts. Complaints filed with the Comptroller may result in decisions which may debar a contractor from bidding contracts with any state governmental entity and other political subdivisions.

(C) Records: The Contractor is expected to submit accurate payroll reports and other required documents and verify attendance and job classifications being utilized in compliance with the law, Contract provisions and agency procedures.

31. Insurance

(A) Bidders are advised that the insurance requirements contained herein are regarded as material terms of the Contract. As required by Article 22 of the Contract, the contractor must effect and maintain with companies licensed and authorized to do business in the State of New York, the types of insurance set forth therein, when required by and in the amounts set forth in Schedule A of the General Conditions. Such required insurance must be provided from the date the contractor is ordered to commence work and up to the date of final acceptance of all required work.

(B) The contractor must, within ten days of receipt of the notice of award, submit the following insurance documentation: (a) original certificate of insurance for general liability in the amount required by Schedule A of the General Conditions, and (b) original certificates of insurance or other proof of coverage for workers' compensation and disability benefits, as required by Section 57 of the New York State Workers' Compensation Law and Section 220 of the Disability Benefits Law.

32. Lump Sum Contracts

(A) Comparison of Bids: Bids on Lump Sum Contracts will be compared on the basis of the lump sum price bid, adjusted for alternate prices bid, if any.

(B) Lump Sum Bids for "General Construction Work" which include excavation shall include all necessary excavation work defined in the Specifications as being included in the lump sum bid. The bidder shall also bid a unit price for the additional cost of excavating material which is defined in the Specifications as excavation for which additional payment will be made. The total estimated additional cost of removing such material will be taken as the quantity set forth in the Engineer's Estimate multiplied by the unit price bid. This total estimated cost of additional excavation shall be added to the lump sum bid for the General Construction Work for the purpose of comparing bids to determine the low bidder.

(C) Variations from Engineer's Estimate: The Engineer's Estimate of the quantity of excavation for which additional payment will be made is approximate only and is given solely to be used as a uniform basis for the comparison of bids and such estimate is not to be considered as part of this contract. The quantities actually required to complete the contract work may be more or less than the quantities in the Engineer's Estimate and, if so, no action for damages or for loss of profits shall accrue to the contractor by reason thereof.

33. Unit Price Contracts

(A) Comparison of Bids: Bids on Unit Price Contracts will be compared on the basis of a total estimated price,

arrived at by taking the sum of the estimated quantities of such items, in accordance with the Engineer's Estimate of Quantities set forth in the Bid Schedule, multiplied by the corresponding unit prices, and including any lump sum bids on individual items.

(B) Variations from Engineer's Estimate: Bidders are warned that the Engineer's Estimate of Quantities on the various items of work and materials is approximate only, given solely to be used as a uniform basis for the comparison of bids, and is not be considered part of this contract. The quantities actually required to complete the contract work may be less or more than so estimated, and if so, no action for damages or for loss of profits shall accrue to the contractor by reason thereof.

(C) Overruns: The terms and conditions applicable to overruns of unit price items are set forth in Article 26 of the Contract.

34. Excise Tax

Bidders are referred to the Specifications for information on Federal Excise Tax exemptions.

35. Licenses and Permits

The successful bidder will be required to obtain all necessary licenses and permits necessary to perform the work.

36. Multiple Prime Contractors

If more than one prime contractor will be involved on this project, all contractors are required to examine the Invitation for Bid packages for all other parts of the project.

37. Locally Based Enterprise Requirements (LBE)

This Contract is subject to the requirements of Administrative Code, Section 6-108.1, and the regulations promulgated thereunder. No construction contract will be awarded unless and until these requirements have been complied with in their entirety. The bidder is advised of the provisions set forth below, as well as the provisions with respect to the Locally Based Enterprise Program contained in Article 67 of the Contract. The contractor is advised that:

(A) If any portion of the Contract is subcontracted, not less than ten percent of the total dollar amount of the contract shall be awarded to locally based enterprises ("LBEs"); except, where less than ten percent of the total dollar amount of the Contract is subcontracted, such lesser percentage shall be so awarded.

(B) No contractor shall require performance and payment bonds from LBE subcontractors.

(C) No Contract shall be awarded unless the contractor first identifies in its bid:

(1) the percentage, dollar amount and type of work to be subcontracted; and

(2) the percentage, dollar amount and type of work to be subcontracted to LBEs.

(D) Within ten calendar days after notification of low bid, the apparent low bidder shall submit an "LBE Participation Schedule" to the contracting agency. If such schedule does not identify sufficient LBE subcontractors to meet the requirements of Administrative Code Section 6-108.1, the apparent low bidder shall submit documentation of its good faith efforts to meet such requirements.

(1) The "LBE Participation Schedule" shall include:

(a) the name and address of each LBE that will be given a subcontract,

(b) the percentage, dollar amount and type of work to be subcontracted to the LBE, and

(c) the dates when the LBE subcontract work will commence and end.

(2) The following documents shall be attached to the "LBE Participation Schedule":

(a) verification letters from each subcontractor listed in the "LBE Participation Schedule" stating that the LBE will enter into a formal agreement for work,

(b) certification documents of any proposed LBE subcontractor which is not on the LBE certified list, and

(c) copies of the certification letter of any proposed subcontractor which is an LBE.

(3) Documentation of good faith efforts to achieve the required LBE percentage shall include as appropriate but not limited to the following:

(a) attendance at prebid meetings, when scheduled by the agency, to advise bidders of contract requirements;

(b) advertisement where appropriate in general circulation media, trade association publications and small business media of the specific subcontracts that would be at least equal to the percentage goal for LBE utilization specified by the contractor;

(c) written notification to association of small, minority and women contractors soliciting specific subcontractors;

(d) written notification by certified mail to LBE firms that their interest in the contract is solicited for specific work items and their estimated values;

(e) demonstration of efforts made to select portions of the work for performance by LBE firms in order to increase the likelihood of achieving the stated goal;

(f) documented efforts to negotiate with LBE firms for specific subcontracts, including at a minimum:

(i) The names, address and telephone numbers of LBE firms that are contacted;

(ii) A description of the information provided to LBE firms regarding the plans and specifications for portions of the work to be performed;

(iii) Documentation showing that no reasonable price can be obtained from LBE firms;

(iv) A statement of why agreements with LBE firms were not reached;

(g) a statement of the reason for rejecting any LBE firm which the contractor deemed to be unqualified; and

(h) documentation of efforts made to assist the LBE firms contacted that needed assistance in obtaining required insurance.

(E) Unless otherwise waived by the Commissioner with the approval of the Office of Economic and Financial Opportunity, failure of a proposed contractor to provide the information required by paragraphs (C) and (D) above may render the bid non-responsive and the Contract may not be awarded to the bidder. If the contractor states that it will subcontract a specific portion of the work, but can demonstrate despite good faith efforts it cannot achieve its required LBE percentage for subcontracted work until after award of Contract, the Contract may be awarded, subject to a letter of compliance from the contractor stating that it will comply with Administrative Code Section 6-108.1 and subject to approval by the Commissioner. If the contractor has not met its required LBE percentage prior to award, the contractor shall demonstrate that a good faith effort has been made subsequent to award to obtain LBEs on each subcontract until its meets the required percentage.

(F) When a bidder indicates prior to award that no work will be subcontracted, no work may be subcontracted without the prior written approval of the Commissioner, which shall be granted only if the contractor in good faith seeks LBE subcontractors at least six weeks prior to the start of work.

(G) The contractor may not substitute or change any LBE which was identified prior to award of the contract without the written permission of the Commissioner. The contractor shall make a written application to the Commissioner for permission to make such substitution or change, explaining why the contractor needs to change its LBE subcontractor and how the contractor will meet its LBE subcontracting requirement. Copies of such application must be served on the originally identified LBE by certified mail return receipt requested,

as well as the proposed substitute LBE. The Commissioner shall determine whether or not to grant the contractor's request for substitution.

38. Bid Submission Requirements

The Bid Submission Requirements are set forth in the PASSPort RFx.

39. Comptroller's Certificate

This Contract shall not be binding or of any force unless it is registered by the Comptroller in accordance with Section 328 of the City Charter and the Procurement Policy Board Rules. This Contract shall continue in force only after annual appropriation of funds by the City of New York and certification as hereinabove set forth.

40. Procurement Policy Board Rules

This Invitation For Bids is subject to the Rules of the Procurement Policy Board of the City of New York. In the event of a conflict between said Rules and a provision of this Invitation For Bids, the Rules shall take precedence.

41. DDC Safety Requirements

The DDC Safety Requirements apply to the work to be performed pursuant to the Contract. The DDC Safety Requirements are set forth on the following pages.

THIS PAGE INTENTIONALLY LEFT BLANK

CITY OF NEW YORK
DEPARTMENT OF DESIGN AND CONSTRUCTION
SAFETY REQUIREMENTS FOR CONSTRUCTION CONTRACTS

January 2020

THE DDC SAFETY REQUIREMENTS FOR CONSTRUCTION CONTRACTS INCLUDE THE FOLLOWING SECTIONS:

I. POLICY ON SITE SAFETY 2

II. PURPOSE 2

III. DEFINITIONS 2

IV. RESPONSIBILITIES 4

V. SAFETY QUESTIONNAIRE 7

VI. SITE SAFETY PLAN 7

VII. KICK-OFF/PRE-CONSTRUCTION MEETINGS AND SAFETY REVIEW 9

VIII. EVALUATION DURING WORK IN PROGRESS 9

IX. SAFETY PERFORMANCE EVALUATION 10

I. POLICY ON SITE SAFETY

The City of New York Department of Design and Construction (DDC) is committed to a policy of injury and illness prevention and risk management for construction work that will ensure the safety and health of the workers engaged in the projects and the protection of the general public. Therefore, it is DDC's policy that work carried out by Contractors on DDC contracts must, at a minimum, comply with the most current versions of all applicable federal, state and city laws, rules, and regulations, including without limitation:

- Code of Federal Regulations, Title 29, Part 1926 (29 CFR 1926) and applicable Sub-parts of Part 1910 – U.S. Occupational Safety and Health Administration (OSHA);
- Federal Highway Administration – Manual on Uniform Traffic Control Devices (MUTCD);
- New York Codes, Rules and Regulations (NYCRR), Title 12, Part 23 – Protection in Construction, Demolition and Excavation Operations;
- New York Codes, Rules and Regulations (NYCRR), Title 16, Part 753 – Protection of Underground Facilities;
- New York City Administrative Code, Title 28 – New York City Construction Codes;
- Rules of the City of New York, Title 15, Chapter 13 – Rules Pertaining To the Prevention of the Emission of Dust from Construction Related Activities;
- Rules of the City of New York, Title 15, Chapter 28 – Citywide Construction Noise Mitigation;
- Rules of the City of New York, Title 34 Chapter 2 – NYCDOT Highway Rules.

The Contractor will be required to comply with all new and/or revised federal, state and city laws, rules, and regulations, issued during the course of the project, at the expense of the Contractor without any additional costs to the DDC.

II. PURPOSE

The purpose of this policy is to ensure that Contractors perform their work and supervise their employees in accordance with all applicable federal, state and city rules and regulations. Further, Contractors will be expected to minimize or eliminate jobsite and public hazards, through a planning, inspection, auditing and corrective action process. The goal is to control risks so that injuries, illnesses, and accidents to contractors' employees, DDC employees and the general public, as well as damage to city-owned and private property, are reduced to the lowest level feasible.

III. DEFINITIONS

Agency Chief Contracting Officer (ACCO): The ACCO will mean the person delegated authority by the Commissioner to organize and supervise the procurement activity of subordinate Agency staff in conjunction with the City Chief Procurement Officer (CCPO).

Competent Person: As defined by OSHA, an individual who is capable of identifying existing and predictable hazards in the surroundings or working conditions that are unsanitary, hazardous, or dangerous to employees or the general public, and who has authorization to take prompt corrective measures to eliminate them. This individual will have completed, at a minimum an authorized 30-hour OSHA Construction Safety Course. The Contractor may be required to provide more than one competent person due to construction operations and based on the number of active work sites.

Construction Safety Auditor: A representative of the Office of Construction Safety who provides inspection and assessment services to enhance health and safety on all DDC construction projects. The activities of the Construction Safety Auditor include performing site audits, reviewing safety plans, reviewing construction permits, drawings, verifying Contractor's compliance with applicable federal, state and city laws, rules, regulations, and DDC Contract Safety Requirements, etc. and rendering technical advice and assistance to DDC Resident Engineers and Project Managers.

Office of Construction Safety: A unit of DDC Safety and Site Support that assesses contractor's safety on DDC jobsites and advises responsible parties of needed corrective actions.

Registered Construction Superintendent: For certain projects, as defined in New York City Construction Codes – Title 28, the contractor will provide a Construction Superintendent registered with the NYC Department of Buildings and responsible for all duties as defined in Chapter 33 of Title 1 of the Rules of the City of New York.

Contractor: For purposes of these Safety Requirements, the term "Contractor" will mean any person or entity that enters into a contract for the performance of construction work on a DDC project. The term "Contractor" will include any person or entity which enters into any of the following types of contracts: (1) a prime construction contract for a specific project, (2) a prime construction contract using the Job Order Contracting System ("JOCS Contract"), and (3) a subcontract with a CM/Builder ("First Tier Subcontract").

Daily Safety Job Briefing: Daily jobsite safety briefings, given to all jobsite personnel at project site by the Contractor before work begins and/or if hazards or potential hazards are discovered while working, with the purpose of discussing the scheduled activities for the day, the hazards related to these activities, activity specific safety procedures, and Job Hazard Analysis associated with the scheduled construction work. Daily jobsite briefings will be documented, available at the jobsite, and will include at a minimum, topics, name and signature of the person conducting the briefing session, names and signatures of attendants, name of the designated competent person, contactor's name, DDC Project ID, date, time, and location.

Director – Office of Construction Safety: Responsible for the operations of the Office of Construction Safety and the DDC Site Safety management programs.

Job Hazard Analysis (JHA): A process of identifying the major job tasks and any potential site-specific hazards that may be present during construction and establishing the means and methods to eliminate or control those hazards. A JHA will be documented, available at the jobsite and will include at a minimum work tasks, being performed, identified hazards, control methods for the identified hazards, contractor's name, DDC Project ID, location, date, name and signature of certifying person. A JHA is a living document that will be re-evaluated and revised to address new hazards and tasks that may develop and will be present at the worksite and produced upon request.

Qualified Person: As defined by OSHA, an individual who, by possession of a recognized degree, certificate, license, or professional standing, or who by extensive knowledge, training, and experience, has successfully demonstrated his or her ability to solve problems relating to the subject matter, the work, or the project. Qualified Persons are required under regulation to address issues pertaining, but without limit, to fall protection, scaffold design, maintenance and protection of traffic, and excavation protective system, among others.

Project Site: Those areas indicated in the Contract Documents where the Work is to be performed.

Project Safety Representative: The designated Project Safety Representative will have at a minimum an OSHA 30-hour Construction Safety Course and other safety training applicable to Contractor's/subcontractor's project work. This individual will be responsible to oversee safety performance of the required construction work, conduct documented daily safety inspections, and implement corrective actions to maintain a safe work site. The Project Safety Representative must have sufficient experience and skills necessary to thoroughly understand the health and safety hazards and controls and must have authority to undertake corrective actions. A dedicated full-time Project Safety Representative may be required on large projects and projects deemed by DDC to be particularly high risk. DDC reserves the right to request a dedicated full-time Project Safety Representative for any reason at any time during the course of the project at the expense of the Contractor without any additional costs to the DDC. The full-time Project Safety Representative will be present at the site during all work activities.

Resident Engineer ("RE"): Representative of the Commissioner duly designated by the Commissioner to be his/her representative at the site of the work. The RE may be a consultant retained by DDC, including a Construction Management (CM) or Resident Engineer Inspection (REI) firm. If DDC has retained a CM, REI or other consultant firm to perform management and oversite for the Project (e.g., CM-Builder, CM-Design-Builder, Project Manager, Program Manager), that CM, REI or other consultant is the Resident Engineer for purposes of these Safety Requirements.

Safety Questionnaire: Used by DDC to evaluate Contractor's current and past safety performance. It is required to be completed by all Contractors initially when submitting bids for Construction work, or when being pre-qualified and updated annually or as requested by the DDC.

Site Safety Manager: For certain projects, as defined in New York City Construction Codes – Title 28, the Contractor will provide a Site Safety Manager with a Site Safety Manager License issued by the New York City Department of Building.

Site Safety Plan: A site-specific safety plan developed by the Contractor for a DDC project. The Site Safety Plan will identify the project work scope, identify hazards associated with the project work and include project specific safety procedures and training appropriate and necessary to complete the work. The Site Safety Plan will be submitted within 30 days from the Award Date or as otherwise directed and is subject to review and acceptance by the Office of Construction Safety prior to the commencement of work at the site.

Unsafe or Unhealthy Condition: A condition that could be potentially hazardous to the health and safety of personnel or the public, and/or damaging to equipment, machinery, property, or the environment.

Weekly Safety Meetings: Weekly jobsite safety meetings, given to all jobsite personnel by Contractor, with the purpose of discussing general safety topics and job specific requirements encountered at the DDC work site. Weekly safety meetings will be documented and will include at a minimum, topics, name and signature of the person conducting the meeting, names and signatures of attendees, contractor's name, DDC Project ID, date, and location.

Work: The construction required by the Contractor's Contract Documents whether completed or partially completed, performed by the Contractor/ subcontractors. Work refers to the furnishing of labor, furnishing and incorporating materials and equipment into the construction and providing any service required by the Contract Documents to fulfill the Contractor's obligation to complete the Project. For the purposes of these Safety Requirements, the term "Work" includes all Utility Interference work (commonly referred to as "Section U", "EP-7", and "Joint Bid" work) performed in association with this Contract.

IV. RESPONSIBILITIES

All persons who manage, perform, and provide support for construction projects will conduct operations in compliance with the requirements identified in this Policy and all applicable governing regulatory agency requirements and guidelines pertaining to safety in construction.

A. Resident Engineer

1. Review and facilitate Contractor(s) Site Safety Plan submittals to DDC for acceptability.
2. Notify the Office of Construction Safety of the commencement of construction work.
3. Develop and implement a training verification process to ensure that all CM/REI, consultant, Contractor, and subcontractor employees are properly trained. Maintain all applicable initial and refresher training records and assures documentation availability on site.
4. Maintain documentation of and attend weekly safety meetings and daily safety job briefings.
5. Assure that Contractor(s) JHA's are current to reflect the work tasks being performed, hazards, and control methods to mitigate the identified hazards. Verify that all employees at the job site are trained on the JHAs and maintain supporting documentation on site.
6. Assure adequate planning for all critical construction activities (crane operation, excavation, confined space entry, etc.) including coordination between Contractor(s) /DDC/ other Agencies as required.
7. Maintain custody of all construction related permits, plans, approvals, drawings, etc., related to the project and assure their availability on site.
8. Recognize, minimize, or eliminate jobsite and public hazards, through required planning, inspection, verification, and corrective action process.
9. Monitor the conditions at the site for conformance with the Contractor's Site Safety Plan, DDC policies, permits, and all applicable regulations and documentation that pertain to construction safety.
10. Notify the Contractor and DDC immediately upon determination of any condition or activity existing which is not in compliance with the Contractor's Site Safety Plan, applicable federal, state or local codes or any condition that presents a potential risk of injury to the public or workers or possible damage to property. Direct the Contractor to provide such labor, materials, equipment, and supervision to remedy such conditions.
11. Notify the Office of Construction Safety and the ACCO's Insurance and Risk Management Unit of project-related accidents, incidents, and near misses as per DDC's Construction Safety Emergency and Accident Notification and Response Procedure within two (2) hours.
12. In case of an accident, incident, or near miss, RE is responsible to protect the integrity of the accident site including but not limited to: the safeguarding of all evidence, documentation of all personnel on site at the time of the accident, gather facts related to all accidents, incidents, or near miss, and prepare required DDC Construction Accident Report as per DDC's Construction Safety Emergency and Accident Notification and Response Procedure. Maintain all records pertaining to accidents, incidents, and near miss and have them available upon request.
13. Notify the Office of Construction Safety within two (2) hours of the start of an inspection by any outside/ regulatory agency personnel, including NYS, OSHA, NYC DOB or any other City/State/Federal oversight entity and forward a copy of the inspection report within one business day of its receipt.
14. Escort and assist Construction Safety Auditors during all field and record audits.
15. Report any emergency conditions to the Office of Construction Safety immediately.

Note: In addition to the responsibilities listed above, if the Resident Engineer is a CM/REI or other non-City party hired by the City to manage the Project, the Resident Engineer is also required to do the following:

16. Provide personnel who are certified and or trained appropriately for the requirements of the project.

17. Perform an investigation for any project-related accidents, incidents, and near misses. Within 24-hours of the time of the accident, incident, or near miss, the CM/REI will submit an investigation report to the Office of Construction Safety. Such report will include proposed remedial measures and implementation of corrective actions to prevent recurrence.

DDC reserves the right to request that the CM/REI replace any CM/REI personnel for any reason at any time during the project.

B. Construction Contractors

Note: For CM-Build and CM-Design-Build Projects, the CM will meet all requirements listed in this section, as well as the Resident Engineer section above.

1. Submit a completed Safety Questionnaire and other safety performance related documentation with its bid or as part of a pre-qualification package.
2. Submit a Site Safety Plan within 30 days from the Award Date or as otherwise directed. The Site Safety Plan is subject to review and acceptance by the Office of Construction Safety prior to the commencement of work at the site. The Site Safety Plan will be revised and updated as necessary during the course of the project. If requested by the Office of Construction Safety, the Site Safety Plan must be developed and submitted for approval using a web-based system, the Site Safety Plan Application (SSP App).
3. Designate and identify a Project Safety Representative in the Site Safety Plan. The Contractor will immediately notify the Office of Construction Safety, in a form and manner acceptable to the Office of Construction Safety, of any permanent change to the designated Project Safety Representative. In the event the primary designated Project Safety Representative is temporary unable to perform his or her duties, an alternate Project Safety Representative will be provided. Resumes, outlining the qualification and experience for the Project Safety Representative (s) will be included in the Site Safety Plan and available upon request. DDC reserves the right to request the Contractor to replace a Project Safety Representative for any reason at any time during the course of the project.
4. Designate and identify a Competent Person(s) in the Site Safety Plan. Contractor/subcontractor may be required to provide more than one competent person due to construction operations and based on a number of work tasks/areas. DDC reserves the right to request the Contractor to replace a Competent Person or provide additional Competent Person(s) for any reason at any time during the course of the project. The Competent Person will be present at the site during all work activities.
5. For certain projects, as defined in New York City Construction Codes – Title 28, designate and identify the Licensed Site Safety Manager or Registered Construction Superintendent. Resumes, outlining the qualification and experience for the Licensed Site Safety Manager or Registered Construction Superintendent will be included in the Site Safety Plan and available upon request. The Contractor will immediately notify the Office of Construction Safety, in a form and manner acceptable to the Office of Construction Safety, of any permanent change to the designated Site Safety Manager and/or Construction Superintendent. In the event the primary designated Site Safety Manager or Construction Superintendent is temporarily unable to perform his
or her duties, an alternate Licensed Site Safety Manager and/or Registered Construction Superintendent will be provided. The Office of Construction Safety must be informed of such change. DDC reserves the right to request the Contractor to replace Site Safety Manager or Construction Superintendent for any reason at any time during the course of the project.
6. Develop a written Job Hazard Analysis (JHA) that identifies safety hazards and control methods for project specific work tasks. A preliminary JHA will be included in the Site Safety Plan submitted by the Contractor. A JHA is a living document that will be re-evaluated and revised to address new hazards and tasks that may develop during the course of the project and will be present at the worksite and produced upon request.
7. Develop project specific safety procedures to protect employees, general public, and property during all construction activities for the duration of the project.
8. Ensure that all employees are aware of the hazards associated with the project through documented formal and informal training and/or other communications. Conduct and document new employee and site-specific safety orientation for all Contractor and subcontractor personnel to review the hazards associated with the project as identified in the Site Safety Plan and the specific safety procedures and controls that will be used to protect workers, the general public and property. The Project Safety Representative will conduct this training prior to mobilization and if necessary during the course of the project. Documentation will be provided to the RE.

9. Prior to performing any work on DDC projects all Contractor's and subcontractor's employees will, at a minimum, have successfully completed, within the previous five calendar years, an OSHA 10-hour construction safety course.

   All training records (OSHA 10-hour, flagger, scaffold, fall protection, confined space, etc.) will be provided to the RE prior to mobilization, included in the Site Safety Plan, kept current during the course of the project, and available for review.

10. Conduct and document weekly safety meetings and daily job briefing sessions for the duration of the project. Attendance at weekly safety meetings and daily job briefing sessions is mandatory. A written record of weekly safety meetings will be available upon request and job briefing sessions will be available at the worksite.
11. As part of the Site Safety Plan, prepare site specific procedures, such as maintenance and protection of traffic plan, steel erection plan, confined space program, fall protection plan, demolition plan, site specific emergency evacuation plan, etc. (if not otherwise provided in the contract documents) and comply with all of its provisions.
12. Have immediately available for review at the project site where actual construction activities are being performed all applicable documentation, including but not limited to: JHAs for work tasks being performed, all required training records, MPT plan (where applicable), Noise and Dust Mitigation Plans, excavation protective system drawings (where applicable), Emergency Evacuation plan, fall protection program (where applicable), confined space program (where applicable), all required permits, daily job briefing records, all required documentation for crane operation (where applicable), daily inspection checklist, scaffold and sidewalk drawings (when applicable), safety data sheets for chemicals in use.
13. Comply with all federal, state and local safety and health rules, laws, and regulations.
14. Comply with all provisions of the Site Safety Plan.
15. Provide, replace, and adequately maintain at or around the project site, suitable and sufficient signage, lights, barricades and enclosures (fences, sidewalk sheds, netting, bracing, etc.). The project specific MPT plan will be developed, implemented, and reviewed during the course of the project.
16. The Project Safety Representative will conduct daily safety inspections, document the inspection results, implement corrective actions for the identified hazards. Maintain the inspection records and have them available upon request.
17. **Report unsafe or unhealthy conditions to the RE as soon as practical, but no more than 24 hours after discovery, and take prompt actions to remove or abate such conditions. Should an imminent dangerous condition be discovered, Contractor will stop all work in the area of danger until corrections are made.**
18. Report all accidents, incidents and near misses involving injuries to workers or the general public, as well as property damage, to the RE within one (1) hour.
19. Following an accident or incident, unless otherwise directed, the Contractor will not remove or alter any equipment, structure, material, or evidence related to the accident or incident. Exception: Immediate emergency procedures taken to secure structures, temporary construction, operations, or equipment that pose a continued imminent danger or facilitate assistance for persons who are trapped or who have sustained bodily injury. Take additional measures as necessary to secure the accident or incident site and to protect against any further injury or property damage.
20. The Contractor will perform an investigation into the root cause of the accident, incident, or near miss. Within 24 hours of an accident, incident, or near miss, the Contractor will prepare and submit to the RE a written investigation report detailing findings, corrective actions, and hazard mitigation implementation to prevent recurrence.
21. Notify the RE within two (2) hours of the start of an inspection by any outside regulatory agency personnel, including OSHA, NYC DOB, or others.
22. Maintain all records pertaining to all required safety compliance documents, accidents and incidents reports. DDC reserves the right to request copy of any records pertaining to the safety of the project and required by DDC and other federal, state, and city agencies, including but not limited to permits, training records, safety inspection records, drawings, equipment records, etc.
23. Cooperate with DDC Office of Construction Safety/ RE and address DDC recommendations on safety, which will in no way relieve the Contractor of its responsibilities for safety on the project. The Contractor has sole responsibility for safety.

V. SAFETY QUESTIONNAIRE

DDC requires that all Contractors provide information regarding their current and past safety performance and programs. This will be accomplished by the use of the DDC Safety Questionnaire. As a part of the bid submittal package, the contractor will submit a completed DDC Safety Questionnaire listing company workers' compensation experience modification rating and OSHA Incident Rates for the three (3) years prior to the date of the bid opening. DDC may request a Contractor to update its Questionnaire at any time or to provide more detailed information. The Contractor will provide the requested information within 15 days.

The following criteria will be used by DDC in reviewing the Contractor's responsibility, which will be based on the information provided on the questionnaire:

Criteria 1: OSHA Injury and Illness Rates (I&IR) are no greater than the average for the industry (based on the most current Bureau of Labor Statistics data for the Contractors SIC code); and

Criteria 2: Insurance workers compensation Experience Modification Rate (EMR) equal to or less than 1.0; and

Criteria 3: Any willful violations issued by OSHA or NYC DOB within the last three (3) years; and

Criteria 4: A fatality (worker or member of public) and injuries, requiring OSHA notification, experienced on or near Contractor's worksite within the last three (3) years; and

Criteria 5: Past safety performance on DDC projects (accidents; status of site safety plan submittals; etc.)

Criteria 6: OSHA violation history for the last three (3) years;

Criteria 7: Contractor will provide OSHA Injury and Illness Records (currently OSHA 300 and 300A Logs) for the last three (3) years.

If the Contractor fails to meet the basic criteria listed above, the Office of Construction Safety may request, through the ACCO, more details concerning the Contractor's safety experience. DDC may request the Contractor to provide copies of, among other things, accident investigation reports, OSHA records, OSHA and NYC DOB citations, EPA citations and written corrective action plan.

VI. SITE SAFETY PLAN

Within thirty (30) days from the Award Date or as otherwise directed, the Contractor will submit the Site Safety Plan. The Site Safety Plan will identify project work scope, safety hazards associated with the project tasks, and include specific safety procedures and training appropriate and necessary to complete the work. The Site Safety Plan is subject to review and acceptance by the Office of Construction Safety prior to the commencement of work at the site. Due to the project work scope and project duration, the Office of Construction Safety may grant a conditional acceptance for a Site Safety Plan without all sections being complete. In a case of a "Conditional Acceptance" of a Site Safety Plan, the Contractor will provide the remaining sections previously incomplete and/or not submitted for review and acceptance by the Office of Construction Safety prior to the commencement of the construction activities. The Office of Construction Safety reserves the right to withdraw the initial "Conditional Acceptance" if the Contractor fails to provide the remaining sections of a Site Safety Plan. Failure by the Contractor to submit an acceptable Site Safety Plan will be grounds for default.

Site Safety Plan requirements: The Site Safety Plan will be a written document and will apply to all project specific Contractor and subcontractor operations, and will have at a minimum, the following elements with each described in a separate section (It may be necessary to modify the basic format for certain unique or high-risk projects, such as tunnels or high-rise construction). All Site Safety Plan sections will be numbered in the order listed below. For sections, which are not applicable for the type of the work being performed by the Contractor on DDC project, the Contractor will in writing indicate "Not applicable based on the project work scope." The Site Safety Plan will include Contractor's name, DDC project ID, project location (s), and development and revision dates. The Site Safety Plan will include the sections, attachments, and appendixes provided in the Site Safety Plan. All pages of the Site Safety Plan will be numbered. If requested by the Office of Construction Safety, the Site Safety Plan must be developed and submitted for approval using a web-based system, the Site Safety Plan Application (SSP App).

1. Project Work Scope – Detailed information regarding work tasks that will be performed by Contractor and subcontractors under the project.
2. Responsibility and Organization – Contractor's organization chart with responsible personnel for the project, including titles, names, contact information, roles, and responsibilities. All Contractor's personnel required by the DDC Safety Requirements will be identified.
3. Safety Training and Education – OSHA 10 Hours training, requirements for daily safety briefings and weekly safety meetings, any work task specific training, responsible staff for implementation of training program for the project.
4. Job Hazard Analysis (JHA) – Project specific Job Hazard Analysis including work tasks, identified hazards, hazard control methods (administrative, engineering, PPE) to protect workers, property and general public, Contractor's name, project id, location, name and signature of a certifying person, hazard assessment date.
5. Protection of Public – Project specific procedures covering safety of the general public during all project construction activities.
6. Hazard Corrective Actions - Procedures for hazard identification, including responsible person(s), frequency of safety inspections, implementation of corrective actions, safety inspection checklist.
7. Accident/Exposure Investigation – Project specific procedures for accident/incident/near miss investigation and implementation of corrective actions. Accident/incident/near miss notification procedure of DDC project staff (timer frame and responsible personnel).
8. Recording and Reporting Injuries – Procedures to meet 29 CFR 1904 requirements.
9. First Aid and Medical Attention – Responsible staff, location and inspection of First Aid kit, directions to local hospitals; emergency telephone numbers.
10. Project Specific Fire Protection and Prevention Program – Project specific procedures, including responsible staff, fire alarm system/methods, hot work procedures, etc.
11. Housekeeping Procedure.
12. Project Specific Illumination Procedure.
13. Project Specific Sanitation Procedure.
14. Personal Protective Equipment (PPE), including Respiratory Protection Program and Hearing Conservation Program, if required.
15. Hazard Communication Program – Contractor's Hazard Communication Program, responsible staff; training; SDS records, project specific list of chemicals; location of the program and SDS records.
16. Means of Egress – Information regarding free and unobstructed egress from all parts of the building or structure; exit marking; maintenance of means of egress, etc.
17. Employee Emergency Action Plan – Project specific: responsible staff, emergency alarm system/devices, evacuation procedure, procedure to account for employees after evacuation, etc.
18. Evacuation Plan – Project specific evacuation plan (drawing/scheme) with exists and evacuation routes.
19. Ionizing/Nonionizing Radiation – Competent person, license and qualification requirements, type of radiation, employee's exposure and protection, safety procedures, etc.
20. Material Handling, Storage, Use and Disposal – Project specific information regarding material storage, disposal, and handling: procedures, plan/drawings, etc.
21. Signs, Signals, and Barricades – Use of danger/warning signs, safety instruction signs, sidewalk closure and pedestrian fencing and barricades (if not included in the MPT plan), etc.
22. Tools – Hand and Power – Safety procedures for the type of tools to be used.
23. Scaffold – Project specific scaffold types, procedures, training requirements, scaffold drawings, designed, sealed, and signed by NYS Licensed Professional Engineer, or as otherwise directed; competent person, criteria for project specific scaffold, falling object protection, procedures for aerial lifts/scissor lifts.
24. Welding and Cutting – Project specific procedure for welding and cutting, including all necessary safety requirements such as fire prevention, personal protective equipment, hot work permits (if not covered by Contractor's Fire Prevention and Protection program, FDNY certificate requirements).
25. Electrical Safety – Project specific procedures, including lock out-tag out.
26. Fall Protection – Project specific information regarding selected fall protection systems, fall protection plan, responsible staff.
27. Cranes, Derrick, Hoists, Elevators, Conveyors – project specific equipment information including type, rated load capacity, manufacture specification requirements, competent person, exposure to falling load, inspection, recordkeeping, clearance requirements, communication procedure, ground lines, permits.

28. Excavation Safety – Competent person; excavation procedures; project specific protective system, including drawings, designed, sealed, and signed by NYS Licensed Professional Engineer, or as otherwise directed.
29. Protection of Underground Facilities and Utilities Procedure, including responsible staff and responsibilities.
30. Concrete and Masonry Construction Procedures
31. Maintenance and Protection of Traffic Plan – Project specific MPT plan, designed, sealed, and signed by NYS Licensed Professional Engineer, or as otherwise directed; flagmen training, public safety, etc.
32. Steel Erection – Site specific erection plan, requirements for applicable written notifications, competent person, fall protection plan, training requirements, etc.
33. Demolition – Engineering survey, including written evidence, disconnection of all effected utilities, identification of all hazardous chemicals, materials, gases, etc., floor openings, chutes, inspection and maintenance of all stairs/passageways, removal of materials/debris/structural elements, lock out/tag out, competent person.
34. Blasting and the Use of Explosives – Project specific safety procedures, warning signs, training/qualification, transportation, storage and use of explosives, inspection.
35. Stairways and Ladders – Types of stairs and ladders, safety procedures, training requirements.
36. Alcohol and Drug Abuse Policy
37. Rodents and Vermin Controls
38. Toxic and Hazardous Substances – Safety procedures for substances that Contractor's and subcontractor's employees can be exposed on project.
39. Noise Mitigation Plan – Completed project specific Noise Mitigation Plan, and noise mitigation procedures.
40. Confined Space Program – Project specific Confined Space Program, responsible staff, training records, equipment information, rescue procedure, list of project specific confined spaces, forms.
41. Construction Vehicles/Heavy Equipment – Type of construction vehicles/heavy equipment to be used on site, procedures
42. Dust Mitigation Plan – Completed project specific Dust Mitigation Plan, and dust mitigation procedures.
43. Working Over and Near Water. Diving Operations – safety procedures including personal protective equipment, fall protection, rescue services, etc.

The most critical component of the Site Safety Plan is the Job Hazard Analysis (JHA) section. The JHA form is a written document prepared by the Contractor. The Contractor will conduct a site and task assessment to identify the tasks and any potential safety or environmental hazards related to performance of the work, eliminate or implement controls for the potential hazards, and identify proper personal protective equipment for the task. The JHA will be communicated to all Contractor/subcontractor personnel on site. The JHA will include safety hazard identification and controls to protect employees, general public, and property.

The initial JHA will be included in the Contractor's Site Safety Plan and the current JHA form will be available at the construction site for reference. A JHA is a living document that will be re-evaluated and revised to address new hazards and tasks that may develop and will be present at the worksite and produced upon request.

VII. KICK-OFF MEETINGS/PRE-CONSTRUCTION AND SAFETY REVIEW

Prior to the start of construction activities on all DDC projects, RE will invite the Office of Construction Safety to the construction kick-off meeting. The Office of Construction Safety representative(s) will participate in this meeting with the Contractor and RE for the purpose of:

A. Reviewing DDC Contract Safety Requirements
B. Reviewing site-specific safety issues based on a project work scope, location, and any other factors which may impact safety of workers and general public.
C. Reviewing the Site Safety Plan and JHA requirements.
D. Reviewing Accident/Incident reporting and investigation procedures.
E. Reviewing designated safety contacts, roles, and responsibilities.
F. Discussing planned inspections and audits of the site by the Office of Construction Safety personnel.

VIII. EVALUATION DURING WORK IN PROGRESS

The Contractor's adherence to these Safety Requirements will be monitored throughout the project. This will be accomplished by the following:

A. Use of a safety checklist by a representative of the Office of Construction Safety (or other designated DDC representative) and the RE during regular inspections and comprehensive audits of the job site. Field Exit Conferences will be held with the RE and Contractor Project Safety Representatives.

B. The RE will continually monitor the safety and environmental performance of the Contractor's employees and work methods. Deficiencies will be brought to the attention of the Contractor's Project Safety Representative on site for immediate correction. The RE will maintain a written record of these deficiencies and have these records available upon request. Any critical deficiencies will be immediately reported to the Office of Construction Safety via telephone (718)391-1911.

C. If the Contractor's safety performance during the project is not up to DDC standards (safety performance measure, accident/incident rate, etc.) the Director – Office of Construction Safety, or his/her designee will meet with the Contractor's Project Safety Representative and other representatives, the RE, and the DDC Environmental Specialist (if environmental issues are involved). The purpose of this meeting is to 1) determine the level of non-compliance; 2) explain and clarify the safety/environmental provisions; 3) agree on a future course of action to correct the deficiencies.

D. If the deficiencies continue, the Commissioner may, without limitation, declare the Contractor in default.

E. The Contractor will within 1 hour inform the RE of all accidents/incidents/near misses including all fatalities, any injuries to employees or members of the general public, and property damage (e.g., structural damage, equipment rollovers, utility damage, loads dropped from crane). The RE will notify the Office of Construction Safety as per DDC's Construction Safety Emergency and Accident Notification and Response Procedure and will maintain a record of all Contractor accidents/incidents for the project.

F. The Contractor and the RE will notify the Office of Construction Safety within two (2) hours of the start of any NYS-DOL/ NYC-COSH/ OSHA/ EPA inspections.

IX. SAFETY PERFORMANCE EVALUATION

The Contractor's safety record, including accident/incident history and DDC safety inspection results, will be considered as part of the Contractor's performance evaluation at the conclusion of the project. Poor safety performance during the course of the project will be a reason to rate a Contractor unsatisfactory which may be reflected in the City's PASSPort system and will be considered for future procurement actions as set forth in the City's Procurement Policy Board Rules.

NOTICE TO BIDDERS

Please be advised that a Rider to the March 2017 New York City Standard Construction Contract regarding Non-Compensable Delays and Grounds for Extension has been attached and incorporated in this Invitation for Bid. Other than provisions specifically delineated in the Rider, all other terms of the March 2017 New York City Standard Construction Contract continue to apply in full force and effect.

RIDER TO NEW YORK CITY STANDARD CONSTRUCTION CONTRACT (MARCH 2017) REGARDING NON-COMPENSABLE DELAYS AND GROUNDS FOR EXTENSION

[Instructions to Agencies: Please attach this Rider to the March 2017 version of the New York City Standard Construction Contract]

The following provisions supersede the corresponding provisions in the March 2017 version of the New York City Standard Construction Contract:

1. Section **11.5.1** provides as follows:

   11.5.1 The acts or omissions of public or government bodies (other than **City** agencies) or of any third parties who are disclosed in the **Contract Documents,** or those third parties who are ordinarily encountered or who are generally recognized as related to the **Work**, including but not limited to, **Other Contractors**, utilities or private enterprises;

2. Section **11.5.6** provides as follows:

   11.5.6 Climatic conditions, storms, floods, droughts, tidal waves, fires, hurricanes, earthquakes, landslides or other catastrophes or acts of God; acts of war or of the public enemy or terrorist acts; disruption, outage or power failure caused by a utility's inability or failure to provide service, pandemics, epidemics, outbreaks of infectious disease or any other public health emergency; other states of emergency declared by the City, State or Federal government , quarantine restrictions, and freight embargoes; including the **City's** reasonable responses to any of the above; and

3. Section **13.3** provides as follows:

   13.3 Grounds for Extension: If such application is made, the **Contractor** shall be entitled to an extension of time for delay in completion of the **Work** caused solely:

   13.3.1 By any of the acts or omissions of the **City**, its officials, agents or employees set forth in Articles **11.4.1.1** through **11.4.1.9**; or

   13.3.2 By or attributable to any of the items set forth in Articles **11.5.1** through **11.5.7**.

   13.3.3 The **Contractor** shall, however, be entitled to an extension of time for such causes only for the number of **Days** of delay which the **ACCO** or the Board may determine to be due solely to such causes, and then only if the **Contractor** shall have strictly complied with all of the requirements of Articles 9 and 10

CITY OF NEW YORK

STANDARD CONSTRUCTION CONTRACT

March 2017

(NO TEXT ON THIS PAGE)

CITY OF NEW YORK
STANDARD CONSTRUCTION CONTRACT

TABLE OF CONTENTS

CHAPTER I: THE CONTRACT AND DEFINITIONS 1
ARTICLE 1. THE CONTRACT 1
ARTICLE 2. DEFINITIONS 1
CHAPTER II: THE WORK AND ITS PERFORMANCE 4
ARTICLE 3. CHARACTER OF THE WORK 4
ARTICLE 4. MEANS AND METHODS OF CONSTRUCTION 4
ARTICLE 5. COMPLIANCE WITH LAWS 5
ARTICLE 6. INSPECTION 10
ARTICLE 7. PROTECTION OF WORK AND OF PERSONS AND PROPERTY; NOTICES AND INDEMNIFICATION 11
CHAPTER III: TIME PROVISIONS 12
ARTICLE 8. COMMENCEMENT AND PROSECUTION OF THE WORK 12
ARTICLE 9. PROGRESS SCHEDULES 13
ARTICLE 10. REQUESTS FOR INFORMATION OR APPROVAL 13
ARTICLE 11. NOTICE OF CONDITIONS CAUSING DELAY AND DOCUMENTATION OF DAMAGES CAUSED BY DELAY 14
ARTICLE 12. COORDINATION WITH OTHER CONTRACTORS 18
ARTICLE 13. EXTENSION OF TIME FOR PERFORMANCE 19
ARTICLE 14. COMPLETION AND FINAL ACCEPTANCE OF THE WORK 21
ARTICLE 15. LIQUIDATED DAMAGES 23
ARTICLE 16. OCCUPATION OR USE PRIOR TO COMPLETION 23
CHAPTER IV: SUBCONTRACTS AND ASSIGNMENTS 24
ARTICLE 17. SUBCONTRACTS 24
ARTICLE 18. ASSIGNMENTS 26
CHAPTER V: CONTRACTOR'S SECURITY AND GUARANTEE 26
ARTICLE 19. SECURITY DEPOSIT 26
ARTICLE 20. PAYMENT GUARANTEE 27
ARTICLE 21. RETAINED PERCENTAGE 29
ARTICLE 22. INSURANCE 30
ARTICLE 23. MONEY RETAINED AGAINST CLAIMS 36
ARTICLE 24. MAINTENANCE AND GUARANTY 37
CHAPTER VI: CHANGES, EXTRA WORK, AND DOCUMENTATION OF CLAIM 38
ARTICLE 25. CHANGES 38
ARTICLE 26. METHODS OF PAYMENT FOR OVERRUNS AND EXTRA WORK 38
ARTICLE 27. RESOLUTION OF DISPUTES 41
ARTICLE 28. RECORD KEEPING FOR EXTRA OR DISPUTED WORK OR WORK ON A TIME & MATERIALS BASIS 45
ARTICLE 29. OMITTED WORK 46
ARTICLE 30. NOTICE AND DOCUMENTATION OF COSTS AND DAMAGES; PRODUCTION OF FINANCIAL RECORDS 46
CHAPTER VII: POWERS OF THE RESIDENT ENGINEER,THE ENGINEER OR ARCHITECT AND THE COMMISSIONER 48
ARTICLE 31. THE RESIDENT ENGINEER 48
ARTICLE 32. THE ENGINEER OR ARCHITECT OR PROJECT MANAGER 48
ARTICLE 33. THE COMMISSIONER 48
ARTICLE 34. NO ESTOPPEL 49
CHAPTER VIII: LABOR PROVISIONS 49
ARTICLE 35. EMPLOYEES 49
ARTICLE 36. NO DISCRIMINATION 57
ARTICLE 37. LABOR LAW REQUIREMENTS 59

ARTICLE 38. PAYROLL REPORTS **64**
ARTICLE 39. DUST HAZARDS **64**
CHAPTER IX: PARTIAL AND FINAL PAYMENTS 65
ARTICLE 40. CONTRACT PRICE **65**
ARTICLE 41. BID BREAKDOWN ON LUMP SUM **65**
ARTICLE 42. PARTIAL PAYMENTS **65**
ARTICLE 43. PROMPT PAYMENT **66**
ARTICLE 44. SUBSTANTIAL COMPLETION PAYMENT **66**
ARTICLE 45. FINAL PAYMENT **67**
ARTICLE 46. ACCEPTANCE OF FINAL PAYMENT **68**
ARTICLE 47. APPROVAL BY PUBLIC DESIGN COMMISSION **69**
CHAPTER X: CONTRACTOR'S DEFAULT 69
ARTICLE 48. COMMISSIONER'S RIGHT TO DECLARE CONTRACTOR IN DEFAULT **69**
ARTICLE 49. EXERCISE OF THE RIGHT TO DECLARE DEFAULT **71**
ARTICLE 50. QUITTING THE SITE **71**
ARTICLE 51. COMPLETION OF THE WORK **71**
ARTICLE 52. PARTIAL DEFAULT **71**
ARTICLE 53. PERFORMANCE OF UNCOMPLETED WORK **72**
ARTICLE 54. OTHER REMEDIES **72**
CHAPTER XI: MISCELLANEOUS PROVISIONS 72
ARTICLE 55. CONTRACTOR'S WARRANTIES **72**
ARTICLE 56. CLAIMS AND ACTIONS THEREON **73**
ARTICLE 57. INFRINGEMENT **73**
ARTICLE 58. NO CLAIM AGAINST OFFICIALS, AGENTS OR EMPLOYEES **74**
ARTICLE 59. SERVICE OF NOTICES **74**
ARTICLE 60. UNLAWFUL PROVISIONS DEEMED STRICKEN FROM CONTRACT **74**
ARTICLE 61. ALL LEGAL PROVISIONS DEEMED INCLUDED **74**
ARTICLE 62. TAX EXEMPTION **74**
ARTICLE 63. INVESTIGATION(S) CLAUSE **76**
ARTICLE 64. TERMINATION BY THE CITY **78**
ARTICLE 65. CHOICE OF LAW, CONSENT TO JURISDICTION AND VENUE **80**
ARTICLE 66. PARTICIPATION IN AN INTERNATIONAL BOYCOTT **81**
ARTICLE 67. LOCALLY BASED ENTERPRISE PROGRAM **82**
ARTICLE 68. ANTITRUST **82**
ARTICLE 69. MACBRIDE PRINCIPLES PROVISIONS **83**
ARTICLE 70. ELECTRONIC FILING/NYC DEVELOPMENT HUB **85**
ARTICLE 71. PROHIBITION OF TROPICAL HARDWOODS **85**
ARTICLE 72. CONFLICTS OF INTEREST **85**
ARTICLE 73. MERGER CLAUSE **85**
ARTICLE 74. STATEMENT OF WORK **85**
ARTICLE 75. COMPENSATION TO BE PAID TO CONTRACTOR **85**
ARTICLE 76. ELECTRONIC FUNDS TRANSFER **85**
ARTICLE 77. RECORDS RETENTION **86**
ARTICLE 78. EXAMINATION AND VIEWING OF SITE, CONSIDERATION OF OTHER SOURCES OF INFORMATION AND CHANGED SITE CONDITIONS **86**

ARTICLE 79: PARTICIPATION BY MINORITY-OWNED AND WOMEN-OWNED BUSINESS ENTERPRISES IN CITY PROCUREMENT ……87

SIGNATURES ……95

ACKNOWLEDGMENT BY CORPORATION ……96
ACKNOWLEDGMENT BY PARTNERSHIP……96
ACKNOWLEDGMENT BY INDIVIDUAL ……96

ACKNOWLEDGMENT BY COMMISSIONER ……97

AUTHORITY ……98
COMPTROLLER'S CERTIFICATE ……98
MAYOR'S CERTIFICATE ……99
PERFORMANCE BOND #1 ……100
PERFORMANCE BOND #2……104
PAYMENT BOND ……108

(NO TEXT ON THIS PAGE)

WITNESSETH:

The parties, in consideration of the mutual agreements contained herein, agree as follows:

CHAPTER I: THE CONTRACT AND DEFINITIONS

ARTICLE 1. THE CONTRACT

1.1 Except for titles, subtitles, headings, running headlines, tables of contents and indices (all of which are printed herein merely for convenience), the following, except for such portions thereof as may be specifically excluded, shall be deemed to be part of this **Contract**:

1.1.1 All provisions required by law to be inserted in this **Contract**, whether actually inserted or not;

1.1.2 The Contract Drawings and Specifications;

1.1.3 The General Conditions and Special Conditions, if any;

1.1.4 The **Contract**;

1.1.5 The Information for Bidders; Request for Proposals; Notice of Solicitation and Proposal For Bids; Bid or Proposal, and, if used, the Bid Booklet;

1.1.6 All Addenda issued prior to the receipt of the bids; the Notice of Award; Performance and Payment Bonds, if required; and the Notice to Proceed or the Order to Work.

1.2 Should any conflict occur in or between the Drawings and Specifications, the **Contractor** shall be deemed to have estimated the most expensive way of doing the **Work**, unless the **Contractor** shall have asked for and obtained a decision in writing from the **Commissioner** of the **Agency** that is entering into this **Contract**, before the submission of its bid, as to what shall govern.

ARTICLE 2. DEFINITIONS

2.1 The following words and expressions, or pronouns used in their stead, shall, wherever they appear in this Contract, be construed as follows, unless a different meaning is clear from the context:

2.1.1 **"Addendum"** or **"Addenda"** shall mean the additional Contract provisions and/or technical clarifications issued in writing by the Commissioner prior to the receipt of bids.

2.1.2 **"Agency"** shall mean a city, county, borough or other office, position, department, division, bureau, board or commission, or a corporation, institution or agency of government, the expenses of which are paid in whole or in part from the City treasury.

2.1.3 **"Agency Chief Contracting Officer" (ACCO)** shall mean a person delegated authority by the Commissioner to organize and supervise the procurement activity of subordinate Agency staff in conjunction with the CCPO, or his/her duly authorized representative.

2.1.4 **"Allowance"** shall mean a sum of money which the Agency may include in the total amount of the Contract for such specific contingencies as the Agency believes may be necessary to complete the Work, *e.g.*, lead or asbestos remediation, and for which the Contractor will be paid on the basis of stipulated unit prices or a formula set forth in the Contract or negotiated between the parties provided, however, that if the Contractor is not directed to use the Allowance, the Contractor shall have no right to such money and it shall be deducted from the total amount of the Contract.

2.1.5 **"City"** shall mean the City of New York.

2.1.6 **"City Chief Procurement Officer" (CCPO)** shall mean a person delegated authority by the Mayor to coordinate and oversee the procurement activity of Mayoral agency staff, including the ACCO and any offices which have oversight responsibility for the procurement of construction, or his/her duly authorized representative.

2.1.7 **"Commissioner"** shall mean the head of the Agency that has entered into this Contract, or his/her duly authorized representative.

2.1.8 **"Comptroller"** shall mean the Comptroller of the City of New York.

2.1.9 **"Contract"** or **"Contract Documents"** shall mean each of the various parts of the contract referred to in Article 1 hereof, both as a whole and severally.

2.1.10 **"Contract Drawings"** shall mean only those drawings specifically entitled as such and listed in the Specifications or in any Addendum, or any drawings furnished by the Commissioner, pertaining or supplemental thereto.

2.1.11 **"Contract Work"** shall mean everything required to be furnished and done by the Contractor by any one or more of the parts of the Contract referred to in Article 1, except Extra Work as hereinafter defined.

2.1.12 **"Contractor"** shall mean the entity which executed this Contract, whether a corporation, firm, partnership, joint venture, individual, or any combination thereof, and its, their, his/her successors, personal representatives, executors, administrators, and assigns, and any person, firm, partnership, joint venture, individual, or corporation which shall at any time be substituted in the place of the Contractor under this Contract.

2.1.13 **"Days"** shall mean calendar days, except where otherwise specified.

2.1.14 **"Engineer"** or **"Architect"** or **"Project Manager"** shall mean the person so designated in writing by the Commissioner in the Notice to Proceed or the Order to Work to act as such in relation to this Contract, including a private Architect or Engineer or Project Manager, as the case may be. Subject to written approval by the Commissioner, the Engineer, Architect or Project Manager may designate an authorized representative.

2.1.15 **"Engineering Audit Officer" (EAO)** shall mean the person so designated by the Commissioner to perform responsible auditing functions hereunder.

2.1.16 **"Extra Work"** shall mean Work other than that required by the Contract at the time of award which is authorized by the Commissioner pursuant to Chapter VI of this Contract.

2.1.17 **"Federal-Aid Contract"** shall mean a contract in which the United States (federal) Government provides financial funding as so designated in the Information for Bidders.

2.1.18 **"Final Acceptance"** shall mean final written acceptance of all the Work by the Commissioner, a copy of which shall be sent to the Contractor.

2.1.19 **"Final Approved Punch List"** shall mean a list, approved pursuant to Article 14.2.2, specifying those items of Work to be completed by the Contractor after Substantial Completion and dates for the completion of each item of Work.

2.1.20 **"Law"** or **"Laws"** shall mean the Constitution of the State of New York, the New York City Charter, the New York City Administrative Code, a statute of the United States or of the State of New York, a local law of the City of New York, any ordinance, rule or regulation having the force of law, or common law.

2.1.21 **"Materialman"** shall mean any corporation, firm, partnership, joint venture, or individual, other than employees of the Contractor, who or which contracts with the Contractor or any Subcontractor, to fabricate or deliver, or who actually fabricates or delivers, plant, materials or equipment to be incorporated in the Work.

2.1.22 **"Means and Methods of Construction"** shall mean the labor, materials, temporary structures, tools, plant, and construction equipment, and the manner and time of their use, necessary to accomplish the result intended by this Contract.

2.1.23**"Notice to Proceed" or "Order to Work"** shall mean the written notice issued by the Commissioner specifying the time for commencement of the Work and the Engineer, Architect or Project Manager.

2.1.24 **"Other Contractor(s)"** shall mean any contractor (other than the entity which executed this Contract or its Subcontractors) who or which has a contract with the City for work on or adjacent to the building or Site of the Work.

2.1.25 **"Payroll Taxes"** shall mean State Unemployment Insurance (SUI), Federal Unemployment Insurance (FUI), and payments pursuant to the Federal Insurance Contributions Act (FICA).

2.1.26 **"Project"** shall mean the public improvement to which this Contract relates.

2.1.27 **"Procurement Policy Board" (PPB)** shall mean the Agency of the City of New York whose function is to establish comprehensive and consistent procurement policies and rules which shall have broad application throughout the City.

2.1.28 **"Required Quantity"** in a unit price Contract shall mean the actual quantity of any item of Work or materials which is required to be performed or furnished in order to comply with the Contract.

2.1.29 **"Resident Engineer"** shall mean the representative of the Commissioner duly designated by the Commissioner to be his/her representative at the site of the Work.

2.1.30 **"Site"** shall mean the area upon or in which the Contractor's operations are carried on, and such other areas adjacent thereto as may be designated as such by the Engineer.

2.1.31 **"Small Tools"** shall mean items that are ordinarily required for a worker's job function, including but not limited to, equipment that ordinarily has no licensing, insurance or substantive storage costs associated with it; such as circular and chain saws, impact drills, threaders, benders, wrenches, socket tools, etc.

2.1.32 **"Specifications"** shall mean all of the directions, requirements, and standards of performance applying to the Work as hereinafter detailed and designated under the Specifications.

2.1.33 **"Subcontractor"** shall mean any person, firm or corporation, other than employees of the Contractor, who or which contracts with the Contractor or with its subcontractors to furnish, or actually furnishes labor, or labor and materials, or labor and equipment, or superintendence, supervision and/or management at the Site. Wherever the word Subcontractor appears, it shall also mean sub-Subcontractor.

2.1.34 **"Substantial Completion"** shall mean the written determination by the Engineer that the Work required under this Contract is substantially, but not entirely, complete and the approval of the **Final Approved Punch List**.

2.1.35 **"Work"** shall mean all services required to complete the Project in accordance with the Contract Documents, including without limitation, labor, material, superintendence, management, administration, equipment, and incidentals, and obtaining any and all permits, certifications and licenses as may be necessary and required to complete the Work, and shall include both Contract Work and Extra Work.

CHAPTER II: THE WORK AND ITS PERFORMANCE

ARTICLE 3. CHARACTER OF THE WORK

3.1 Unless otherwise expressly provided in the **Contract Drawings**, **Specifications,** and **Addenda**, the **Work** shall be performed in accordance with the best modern practice, utilizing, unless otherwise specified in writing, new and unused materials of standard first grade quality and workmanship and design of the highest quality, to the satisfaction of the **Commissioner**.

ARTICLE 4. MEANS AND METHODS OF CONSTRUCTION

4.1 Unless otherwise expressly provided in the **Contract Drawings**, **Specifications,** and **Addenda**, the **Means and Methods of Construction** shall be such as the **Contractor** may choose; subject, however, to the **Engineer's** right to reject the **Means and Methods of Construction** proposed by the **Contractor** which in the opinion of the **Engineer**:

4.1.1 Will constitute or create a hazard to the **Work**, or to persons or property; or

4.1.2 Will not produce finished **Work** in accordance with the terms of the **Contract**; or

4.1.3 Will be detrimental to the overall progress of the **Project**.

4.2 The **Engineer's** approval of the **Contractor's Means and Methods of Construction**, or his/her failure to exercise his/her right to reject such means or methods, shall not relieve the **Contractor**

of its obligation to complete the **Work** as provided in this **Contract**; nor shall the exercise of such right to reject create a cause of action for damages.

ARTICLE 5. COMPLIANCE WITH LAWS

5.1 The **Contractor** shall comply with all **Laws** applicable to this **Contract** and to the **Work** to be done hereunder.

5.2 Procurement Policy Board Rules: This **Contract** is subject to the Rules of the **PPB** ("**PPB** Rules") in effect at the time of the bid opening for this **Contract**. In the event of a conflict between the **PPB** Rules and a provision of this **Contract**, the **PPB** Rules shall take precedence.

5.3 Noise Control Code provisions.

5.3.1 In accordance with the provisions of Section 24-216(b) of the Administrative Code of the **City** ("Administrative Code"), Noise Abatement Contract Compliance, devices and activities which will be operated, conducted, constructed or manufactured pursuant to this **Contract** and which are subject to the provisions of the **City** Noise Control Code shall be operated, conducted, constructed, or manufactured without causing a violation of the Administrative Code. Such devices and activities shall incorporate advances in the art of noise control development for the kind and level of noise emitted or produced by such devices and activities, in accordance with regulations issued by the **Commissioner** of the **City** Department of Environmental Protection.

5.3.2 The **Contractor** agrees to comply with Section 24-219 of the Administrative Code and implementing rules codified at 15 Rules of the City of New York ("RCNY") Section 28-100 *et seq*. In accordance with such provisions, the **Contractor**, if the **Contractor** is the responsible party under such regulations, shall prepare and post a Construction Noise Mitigation Plan at each **Site**, in which the **Contractor** shall certify that all construction tools and equipment have been maintained so that they operate at normal manufacturers operating specifications. If the **Contractor** cannot make this certification, it must have in place an Alternative Noise Mitigation Plan approved by the **City** Department of Environmental Protection. In addition, the **Contractor**'s certified Construction Noise Mitigation Plan is subject inspection by the **City** Department of Environmental Protection in accordance with Section 28-101 of Title 15 of RCNY. No **Contract Work** may take place at a **Site** unless there is a Construction Noise Mitigation Plan or approved Alternative Noise Mitigation Plan in place. In addition, the **Contractor** shall create and implement a noise mitigation training program. Failure to comply with these requirements may result in fines and other penalties pursuant to the applicable provisions of the Administrative Code and RCNY.

5.4 Ultra Low Sulfur Diesel Fuel: In accordance with the provisions of Section 24-163.3 of the Administrative Code, the **Contractor** specifically agrees as follows:

5.4.1 Definitions. For purposes of this Article 5.4, the following definitions apply:

5.4.1(a) "Contractor" means any person or entity that enters into a Public Works Contract with a **City Agency**, or any person or entity that enters into an agreement with such person or entity, to perform work or provide labor or services related to such Public Works Contract.

5.4.1(b) "Motor Vehicle" means any self-propelled vehicle designed for transporting persons or property on a street or highway.

5.4.1(c) "Nonroad Engine" means an internal combustion engine (including the fuel system) that is not used in a Motor Vehicle or a vehicle used solely for competition, or that is not subject to standards promulgated under Section 7411 or Section 7521 of Title 42 of the United States Code, except that this term shall apply to internal combustion engines used to power generators, compressors or similar equipment used in any construction program or project.

5.4.1(d) "Nonroad Vehicle" means a vehicle that is powered by a Nonroad Engine, fifty (50) horsepower and greater, and that is not a Motor Vehicle or a vehicle used solely for competition, which shall include, but not be limited to, excavators, backhoes, cranes, compressors, generators, bulldozers, and similar equipment, except that this term shall not apply to horticultural maintenance vehicles used for landscaping purposes that are powered by a Nonroad Engine of sixty-five (65) horsepower or less and that are not used in any construction program or project.

5.4.1(e) "Public Works Contract" means a contract with a **City Agency** for a construction program or project involving the construction, demolition, restoration, rehabilitation, repair, renovation, or abatement of any building, structure, tunnel, excavation, roadway, park or bridge; a contract with a **City Agency** for the preparation for any construction program or project involving the construction, demolition, restoration, rehabilitation, repair, renovation, or abatement of any building, structure, tunnel, excavation, roadway, park or bridge; or a contract with a **City Agency** for any final work involved in the completion of any construction program or project involving the construction, demolition, restoration, rehabilitation, repair, renovation, or abatement of any building, structure, tunnel, excavation, roadway, park or bridge.

5.4.1(f) "Ultra Low Sulfur Diesel Fuel" means diesel fuel that has a sulfur content of no more than fifteen parts per million (15 ppm).

5.4.2 Ultra Low Sulfur Diesel Fuel

5.4.2(a) All **Contractors** shall use Ultra Low Sulfur Diesel Fuel in diesel-powered Nonroad Vehicles in the performance of this **Contract**.

5.4.2(b) Notwithstanding the requirements of Article 5.4.2(a), **Contractors** may use diesel fuel that has a sulfur content of no more than thirty parts per million (30 ppm) to fulfill the requirements of this Article 5.4.2, where the Commissioner of the **City** Department of Environmental Protection ("DEP Commissioner") has issued a determination that a sufficient quantity of Ultra Low Sulfur Diesel Fuel is not available to meet the needs of **Agencies** and **Contractors**. Any such determination shall expire after six (6) months unless renewed.

5.4.2(c) **Contractors** shall not be required to comply with this Article 5.4.2 where the **City Agency** letting this **Contract** makes a written finding, which is approved, in writing, by the DEP Commissioner, that a sufficient quantity of Ultra Low Sulfur Diesel Fuel, or diesel fuel that has a sulfur content of no more than thirty parts per million (30 ppm) is not available to meet the requirements of Section 24-163.3 of the Administrative Code, provided that such **Contractor** in its fulfillment of the

requirements of this **Contract**, to the extent practicable, shall use whatever quantity of Ultra Low Sulfur Diesel Fuel or diesel fuel that has a sulfur content of no more than thirty parts per million (30 ppm) is available. Any finding made pursuant to this Article 5.4.2(c) shall expire after sixty (60) **Days**, at which time the requirements of this Article 5.4.2 shall be in full force and effect unless the **City Agency** renews the finding in writing and such renewal is approved by the DEP Commissioner.

5.4.2(d) **Contractors** may check on determinations and approvals issued by the DEP Commissioner pursuant to Section 24-163.3 of the Administrative Code, if any, at www.dep.nyc.gov or by contacting the **City Agency** letting this **Contract**.

5.4.2(e) The requirements of this Article 5.4.2 do not apply where they are precluded by federal or State funding requirements or where the **Contract** is an emergency procurement.

5.4.3 Best Available Technology

5.4.3(a) All **Contractors** shall utilize the best available technology for reducing the emission of pollutants for diesel-powered Nonroad Vehicles in the performance of this **Contract**. For determinations of best available technology for each type of diesel-powered Nonroad Vehicle, **Contractors** shall comply with the regulations of the **City** Department of Environmental Protection, as and when adopted, Chapter 14 of Title 15 of the Rules of the City of New York (RCNY). The **Contractor** shall fully document all steps in the best available technology selection process and shall furnish such documentation to the **City Agency** or the DEP Commissioner upon request. The **Contractor** shall retain all documentation generated in the best available technology selection process for as long as the selected best available technology is in use.

5.4.3(b) No **Contractor** shall be required to replace best available technology for reducing the emission of pollutants or other authorized technology utilized for a diesel-powered Nonroad Vehicle in accordance with the provisions of this Article 5.4.3 within three (3) years of having first utilized such technology for such vehicle.

5.4.3(c) This Article 5.4.3 shall not apply to any vehicle used to satisfy the requirements of a specific Public Works Contract for fewer than twenty (20) **Days**.

5.4.3(d) The **Contractor** shall not be required to comply with this Article 5.4.3 with respect to a diesel-powered Nonroad Vehicle under the following circumstances:

5.4.3(d)(i) Where the **City Agency** makes a written finding, which is approved, in writing, by the DEP Commissioner, that the best available technology for reducing the emission of pollutants as required by this Article 5.4.3 is unavailable for such vehicle, the **Contractor** shall use whatever technology for reducing the emission of pollutants, if any, is available and appropriate for such vehicle.

5.4.3(d)(ii) Where the DEP Commissioner has issued a written waiver based upon the **Contractor** having demonstrated to the DEP Commissioner that the use of the best available technology for reducing the emission of pollutants might endanger the operator of such vehicle or those working near such vehicle, due to engine malfunction, the **Contractor** shall use whatever technology for

reducing the emission of pollutants, if any, is available and appropriate for such vehicle, which would not endanger the operator of such vehicle or those working near such vehicle.

5.4.3(d)(iii) In determining which technology to use for the purposes of Articles 5.4.3(d)(i) and 5.4.3(d)(ii) above, the **Contractor** shall primarily consider the reduction in emissions of particulate matter and secondarily consider the reduction in emissions of nitrogen oxides associated with the use of such technology, which shall in no event result in an increase in the emissions of either such pollutant.

5.4.3(d)(iv) The **Contractor** shall submit requests for a finding or a waiver pursuant to this Article 5.4.3(d) in writing to the DEP Commissioner, with a copy to the **ACCO** of the **City Agency** letting this **Contract**. Any finding or waiver made or issued pursuant to Articles 5.4.3(d)(i) and 5.4.3(d)(ii) above shall expire after one hundred eighty (180) **Days**, at which time the requirements of Article 5.4.3(a) shall be in full force and effect unless the **City Agency** renews the finding, in writing, and the DEP Commissioner approves such finding, in writing, or the DEP Commissioner renews the waiver, in writing.

5.4.3(e) The requirements of this Article 5.4.3 do not apply where they are precluded by federal or State funding requirements or where the **Contract** is an emergency procurement.

5.4.4 Section 24-163 of the Administrative Code. The **Contractor** shall comply with Section 24-163 of the Administrative Code related to the idling of the engines of motor vehicles while parking.

5.4.5 Compliance

5.4.5(a) The **Contractor's** compliance with Article 5.4 may be independently monitored. If it is determined that the **Contractor** has failed to comply with any provision of Article 5.4, any costs associated with any independent monitoring incurred by the **City** shall be reimbursed by the **Contractor**.

5.4.5(b) Any **Contractor** who violates any provision of Article 5.4, except as provided in Article 5.4.5(c) below, shall be liable for a civil penalty between the amounts of one thousand ($1,000) and ten thousand ($10,000) dollars, in addition to twice the amount of money saved by such **Contractor** for failure to comply with Article 5.4.

5.4.5(c) No **Contractor** shall make a false claim with respect to the provisions of Article 5.4 to a **City Agency**. Where a **Contractor** has been found to have done so, such **Contractor** shall be liable for a civil penalty of twenty thousand ($20,000) dollars, in addition to twice the amount of money saved by such **Contractor** in association with having made such false claim.

5.4.6 Reporting

5.4.6(a) For all Public Works Contracts covered by this Article 5.4, the **Contractor** shall report to the **City Agency** the following information:

5.4.6(a)(i) The total number of diesel-powered Nonroad Vehicles used to fulfill the requirements of this Public Works Contract;

5.4.6(a)(ii) The number of such Nonroad Vehicles that were powered by Ultra Low Sulfur Diesel Fuel;

5.4.6(a)(iii) The number of such Nonroad Vehicles that utilized the best available technology for reducing the emission of pollutants, including a breakdown by vehicle model and the type of technology;

5.4.6(a)(iv) The number of such Nonroad Vehicles that utilized such other authorized technology in accordance with Article 5.4.3, including a breakdown by vehicle model and the type of technology used for each such vehicle;

5.4.6(a)(v) The locations where such Nonroad Vehicles were used; and

5.4.6(a)(vi) Where a determination is in effect pursuant to Article 5.4.2(b) or 5.4.2(c), detailed information concerning the **Contractor's** efforts to obtain Ultra Low Sulfur Diesel Fuel or diesel fuel that has a sulfur content of no more than thirty parts per million (30 ppm).

5.4.6(b) The **Contractor** shall submit the information required by Article 5.4.6(a) at the completion of **Work** under the Public Works Contract and on a yearly basis no later than August 1 throughout the term of the Public Works Contract. The yearly report shall cover **Work** performed during the preceding fiscal year (July 1 - June 30).

5.5 Ultra Low Sulfur Diesel Fuel. In accordance with the Coordinated Construction Act for Lower Manhattan, as amended:

5.5.1 Definitions. For purposes of this Article 5.5, the following definitions apply:

5.5.1(a) "Lower Manhattan" means the area to the south of and within the following lines: a line beginning at a point where the United States pierhead line in the Hudson River as it exists now or may be extended would intersect with the southerly line of West Houston Street in the Borough of Manhattan extended, thence easterly along the southerly side of West Houston Street to the southerly side of Houston Street, thence easterly along the southerly side of Houston Street to the southerly side of East Houston Street, thence northeasterly along the southerly side of East Houston Street to the point where it would intersect with the United States pierhead line in the East River as it exists now or may be extended, including tax lots within or immediately adjacent thereto.

5.5.1(b) "Lower Manhattan Redevelopment Project" means any project in Lower Manhattan that is funded in whole or in part with federal or State funding, or any project intended to improve transportation between Lower Manhattan and the two air terminals in the **City** known as LaGuardia Airport and John F. Kennedy International Airport, or between Lower Manhattan and the air terminal in Newark known as Newark Liberty International Airport, and that is funded in whole or in part with federal funding.

5.5.1(c) "Nonroad Engine" means an internal combustion engine (including the fuel system) that is not used in a Motor Vehicle or a vehicle used solely for competition, or that is not subject to standards promulgated under Section 7411 or Section 7521 of Title 42 of the United States Code, except that this term shall apply to internal combustion engines used to power generators, compressors or similar equipment used in any construction program or project.

5.5.1(d) "Nonroad Vehicle" means a vehicle that is powered by a Nonroad Engine, fifty (50) horsepower (HP) and greater, and that is not a Motor Vehicle or a vehicle used solely for competition, which shall include, but not be limited to, excavators, backhoes, cranes, compressors, generators, bulldozers, and similar equipment, except that this terms shall not apply to horticultural maintenance vehicles used for landscaping purposes that are powered by a Nonroad Engine of sixty-five (65) HP or less and that are not used in any construction program or project.

5.5.1(e) "Ultra Low Sulfur Diesel Fuel" means diesel fuel that has a sulfur content of no more than fifteen parts per million (15 ppm).

5.5.2 Requirements. **Contractors** and **Subcontractors** are required to use only Ultra Low Sulfur Diesel Fuel to power the diesel-powered Nonroad Vehicles with engine HP rating of fifty (50) HP and above used on a Lower Manhattan Redevelopment Project and, where practicable, to reduce the emission of pollutants by retrofitting such Nonroad Vehicles with oxidation catalysts, particulate filters, or technology that achieves lowest particulate matter emissions.

5.6 Pesticides. In accordance with Section 17-1209 of the Administrative Code, to the extent that the **Contractor** or any **Subcontractor** applies pesticides to any property owned or leased by the **City**, the **Contractor,** and any **Subcontractor** shall comply with Chapter 12 of the Administrative Code.

5.7 Waste Treatment, Storage, and Disposal Facilities and Transporters. In connection with the **Work**, the **Contractor** and any **Subcontractor** shall use only those waste treatment, storage, and disposal facilities and waste transporters that possess the requisite license, permit or other governmental approval necessary to treat, store, dispose, or transport the waste, materials or hazardous substances.

5.8 Environmentally Preferable Purchasing. The **Contractor** shall ensure that products purchased or leased by the **Contractor** or any **Subcontractor** for the **Work** that are not specified by the **City** or are submitted as equivalents to a product specified by the **City** comply with the requirements of the New York City Environmentally Preferable Purchasing Program contained in Chapter 11 of Title 43 of the RCNY, pursuant to Chapter 3 of Title 6 of the Administrative Code.

ARTICLE 6. INSPECTION

6.1 During the progress of the **Work** and up to the date of **Final Acceptance**, the **Contractor** shall at all times afford the representatives of the **City** every reasonable, safe, and proper facility for inspecting all **Work** done or being done at the **Site** and also for inspecting the manufacture or preparation of materials and equipment at the place of such manufacture or preparation.

6.2 The **Contractor's** obligation hereunder shall include the uncovering or taking down of finished **Work** and its restoration thereafter; provided, however, that the order to uncover, take down and restore shall be in writing, and further provided that if **Work** thus exposed proves satisfactory, and if the **Contractor** has complied with Article 6.1, such uncovering or taking down and restoration shall be

considered an item of **Extra Work** to be paid for in accordance with the provisions of Article 26. If the **Work** thus exposed proves unsatisfactory, the **City** has no obligation to compensate the **Contractor** for the uncovering, taking down or restoration.

6.3 Inspection and approval by the **Commissioner**, the **Engineer**, **Project Manager**, or **Resident Engineer**, of finished **Work** or of **Work** being performed, or of materials and equipment at the place of manufacture or preparation, shall not relieve the **Contractor** of its obligation to perform the **Work** in strict accordance with the **Contract**. Finished or unfinished **Work** not found to be in strict accordance with the **Contract** shall be replaced as directed by the **Engineer**, even though such **Work** may have been previously approved and paid for. Such corrective **Work** is **Contract Work** and shall not be deemed **Extra Work**.

6.4 Rejected **Work** and materials shall be promptly taken down and removed from the **Site**, which must at all times be kept in a reasonably clean and neat condition.

ARTICLE 7. PROTECTION OF WORK AND OF PERSONS AND PROPERTY; NOTICES AND INDEMNIFICATION

7.1 During the performance of the **Work** and up to the date of **Final Acceptance**, the **Contractor** shall be under an absolute obligation to protect the finished and unfinished **Work** against any damage, loss, injury, theft and/or vandalism and in the event of such damage, loss, injury, theft and/or vandalism, it shall promptly replace and/or repair such **Work** at the **Contractor's** sole cost and expense, as directed by the **Resident Engineer**. The obligation to deliver finished **Work** in strict accordance with the **Contract** prior to **Final Acceptance** shall be absolute and shall not be affected by the **Resident Engineer's** approval of, or failure to prohibit, the **Means and Methods of Construction** used by the **Contractor**.

7.2 During the performance of the **Work** and up to the date of **Final Acceptance**, the **Contractor** shall take all reasonable precautions to protect all persons and the property of the **City** and of others from damage, loss or injury resulting from the **Contractor's**, and/or its **Subcontractors'** operations under this **Contract.** The **Contractor's** obligation to protect shall include the duty to provide, place or replace, and adequately maintain at or about the **Site** suitable and sufficient protection such as lights, barricades, and enclosures.

7.3 The **Contractor** shall comply with the notification requirements set forth below in the event of any loss, damage or injury to **Work**, persons or property, or any accidents arising out of the operations of the **Contractor** and/or its **Subcontractors** under this **Contract**.

7.3.1 The **Contractor** shall make a full and complete report in writing to the **Resident Engineer** within three (3) **Days** after the occurrence.

7.3.2 The **Contractor** shall also send written notice of any such event to all insurance carriers that issued potentially responsive policies (including commercial general liability insurance carriers for events relating to the **Contractor**'s own employees) no later than twenty (20) days after such event and again no later than twenty (20) days after the initiation of any claim and/or action resulting therefrom. Such notice shall contain the following information: the number of the insurance policy, the name of the Named Insured, the date and location of the incident, and the identity of the persons injured or property damaged. For any policy on which the **City** and/or the **Engineer**, **Architect**, or **Project Manager** are Additional Insureds, such notice shall expressly specify that "this notice is

being given on behalf of the City of New York as Additional Insured, such other Additional Insureds, as well as the Named Insured."

7.3.2(a) Whenever such notice is sent under a policy on which the **City** is an Additional Insured, the **Contractor** shall provide copies of the notice to the **Comptroller,** the **Commissioner** and the **City** Corporation Counsel. The copy to the **Comptroller** shall be sent to the Insurance Unit, NYC Comptroller's Office, 1 Centre Street – Room 1222, New York, New York, 10007. The copy to the **Commissioner** shall be sent to the address set forth in Schedule A of the General Conditions. The copy to the **City** Corporation Counsel shall be sent to Insurance Claims Specialist, Affirmative Litigation Division, New York City Law Department, 100 Church Street, New York, New York 10007.

7.3.2(b) If the **Contractor** fails to provide any of the foregoing notices to any appropriate insurance carrier(s) in a timely and complete manner, the **Contractor** shall indemnify the **City** for all losses, judgments, settlements, and expenses, including reasonable attorneys' fees, arising from an insurer's disclaimer of coverage citing late notice by or on behalf of the **City**.

7.4 To the fullest extent permitted by law, the **Contractor** shall defend, indemnify, and hold the **City**, its employees, and officials (the "Indemnitees") harmless against any and all claims (including but not limited to claims asserted by any employee of the **Contractor** and/or its **Subcontractors**) and costs and expenses of whatever kind (including but not limited to payment or reimbursement of attorneys' fees and disbursements) allegedly arising out of or in any way related to the operations of the **Contractor** and/or its **Subcontractors** in the performance of this **Contract** or from the **Contractor's** and/or its **Subcontractors'** failure to comply with any of the provisions of this **Contract** or of the **Law**. Such costs and expenses shall include all those incurred in defending the underlying claim and those incurred in connection with the enforcement of this Article 7.4 by way of cross-claim, third-party claim, declaratory action or otherwise. The parties expressly agree that the indemnification obligation hereunder contemplates (1) full indemnity in the event of liability imposed against the Indemnitees without negligence and solely by reason of statute, operation of **Law** or otherwise; and (2) partial indemnity in the event of any actual negligence on the part of the Indemnitees either causing or contributing to the underlying claim (in which case, indemnification will be limited to any liability imposed over and above that percentage attributable to actual fault whether by statute, by operation of **Law**, or otherwise). Where partial indemnity is provided hereunder, all costs and expenses shall be indemnified on a pro rata basis.

7.4.1 Indemnification under Article 7.4 or any other provision of the **Contract** shall operate whether or not **Contractor** or its **Subcontractors** have placed and maintained the insurance specified under Article 22.

7.5 The provisions of this Article 7 shall not be deemed to create any new right of action in favor of third parties against the **Contractor** or the **City**.

CHAPTER III: TIME PROVISIONS

ARTICLE 8. COMMENCEMENT AND PROSECUTION OF THE WORK

8.1 The **Contractor** shall commence the **Work** on the date specified in the **Notice to Proceed** or the **Order to Work**. The time for performance of the **Work** under the **Contract** shall be computed from

the date specified in the **Notice to Proceed** or the **Order to Work**. **TIME BEING OF THE ESSENCE** to the **City**, the **Contractor** shall thereafter prosecute the **Work** diligently, using such **Means and Methods of Construction** as are in accord with Article 4 herein and as will assure its completion not later than the date specified in this Contract, or on the date to which the time for completion may be extended.

ARTICLE 9. PROGRESS SCHEDULES

9.1 To enable the **Work** to be performed in an orderly and expeditious manner, the **Contractor**, within fifteen (15) **Days** after the **Notice to Proceed** or **Order to Work**, unless otherwise directed by the **Engineer**, shall submit to the **Engineer** a proposed progress schedule based on the Critical Path Method in the form of a bar graph or in such other form as specified by the **Engineer**, and monthly cash flow requirements, showing:

9.1.1 The anticipated time of commencement and completion of each of the various operations to be performed under this **Contract**; and

9.1.2 The sequence and interrelation of each of these operations with the others and with those of other related contracts; and

9.1.3 The estimated time required for fabrication or delivery, or both, of all materials and equipment required for the **Work**, including the anticipated time for obtaining required approvals pursuant to Article 10; and

9.1.4 The estimated amount in dollars the **Contractor** will claim on a monthly basis.

9.2 The proposed schedule shall be revised as directed by the **Engineer**, until finally approved by the **Engineer**, and after such approval, subject to the provisions of Article 11, shall be strictly adhered to by the **Contractor**.

9.3 If the **Contractor** shall fail to adhere to the approved progress schedule, or to the schedule as revised pursuant to Article 11, it shall promptly adopt such other or additional **Means and Methods of Construction**, at its sole cost and expense, as will make up for the time lost and will assure completion in accordance with the approved progress schedule. The approval by the **City** of a progress schedule which is shorter than the time allotted under the **Contract** shall not create any liability for the **City** if the approved progress schedule is not met.

9.4 The **Contractor** will not receive any payments until the proposed progress schedule is submitted.

ARTICLE 10. REQUESTS FOR INFORMATION OR APPROVAL

10.1 From time to time as the **Work** progresses and in the sequence indicated by the approved progress schedule, the **Contractor** shall submit to the **Engineer** a specific request in writing for each item of information or approval required by the **Contractor**. These requests shall state the latest date upon which the information or approval is actually required by the **Contractor**, and shall be submitted in a reasonable time in advance thereof to provide the **Engineer** a sufficient time to act upon such submissions, or any necessary re-submissions thereof.

10.2 The **Contractor** shall not have any right to an extension of time on account of delays due to the **Contractor's** failure to submit requests for the required information or the required approval in accordance with the above requirements.

ARTICLE 11. NOTICE OF CONDITIONS CAUSING DELAY AND DOCUMENTATION OF DAMAGES CAUSED BY DELAY

11.1 After the commencement of any condition which is causing or may cause a delay in completion of the **Work**, including conditions for which the **Contractor** may be entitled to an extension of time, the following notifications and submittals are required:

11.1.1 Within fifteen (15) **Days** after the **Contractor** becomes aware or reasonably should be aware of each such condition, the **Contractor** must notify the **Resident Engineer** or **Engineer**, as directed by the **Commissioner**, in writing of the existence, nature and effect of such condition upon the approved progress schedule and the **Work**, and must state why and in what respects, if any, the condition is causing or may cause a delay. Such notice shall include a description of the construction activities that are or could be affected by the condition and may include any recommendations the **Contractor** may have to address the delay condition and any activities the **Contractor** may take to avoid or minimize the delay.

11.1.2 If the **Contractor** shall claim to be sustaining damages for delay as provided for in this Article 11,within forty-five (45) **Days** from the time such damages are first incurred for each such condition, the **Contractor** shall submit to the **Commissioner** a verified written statement of the details and estimates of the amounts of such damages, including categories of expected damages and projected monthly costs, together with documentary evidence of such damages as the **Contractor** may have at the time of submission ("statement of delay damages"), as further detailed in Article 11.6. The **Contractor** may submit the above statement within such additional time as may be granted by the **Commissioner** in writing upon written request therefor.

11.1.3 Articles 11.1.1 and 11.1.2 do not relieve the **Contractor** of its obligation to comply with the provisions of Article 44.

11.2 Failure of the **Contractor** to strictly comply with the requirements of Article 11.1.1 may, in the discretion of the **Commissioner**, be deemed sufficient cause to deny any extension of time on account of delay arising out of such condition. Failure of the **Contractor** to strictly comply with the requirements of both Articles 11.1.1 and 11.1.2 shall be deemed a conclusive waiver by the **Contractor** of any and all claims for damages for delay arising from such condition and no right to recover on such claims shall exist.

11.3 When appropriate and directed by the **Engineer**, the progress schedule shall be revised by the **Contractor** until finally approved by the **Engineer**. The revised progress schedule must be strictly adhered to by the **Contractor**.

11.4 Compensable Delays

11.4.1 The **Contractor** agrees to make claim only for additional costs attributable to delay in the performance of this **Contrac**t necessarily extending the time for completion of the **Work** or resulting from acceleration directed by the **Commissioner** and required to maintain the progress schedule, occasioned solely by any act or omission to act of the **City** listed below. The **Contractor** also agrees that delay from any other cause shall be

compensated, if at all, solely by an extension of time to complete the performance of the **Work**.

11.4.1.1 The failure of the **City** to take reasonable measures to coordinate and progress the **Work** to the extent required by the **Contract**, except that the City shall not be responsible for the **Contractor's** obligation to coordinate and progress the **Work** of its **Subcontractors**.

11.4.1.2 Unreasonable delays attributable to the review of shop drawings, the issuance of change orders, or the cumulative impact of change orders that were not brought about by any act or omission of the **Contractor**.

11.4.1.3 The unavailability of the **Site** caused by acts or omissions of the **City**..

11.4.1.4 The issuance by the **Engineer** of a stop work order that was not brought about through any act or omission of the **Contractor**.

11.4.1.5 Differing site conditions or environmental hazards that were neither known nor reasonably ascertainable on a pre-bid inspection of the **Site** or review of the bid documents or other publicly available sources, and that are not ordinarily encountered in the **Project**'s geographical area or neighborhood or in the type of **Work** to be performed.

11.4.1.6 Delays caused by the **City's** bad faith or its willful, malicious, or grossly negligent conduct;

11.4.1.7 Delays not contemplated by the parties;

11.4.1.8 Delays so unreasonable that they constitute an intentional abandonment of the **Contract** by the **City**; and

11.4.1.9 Delays resulting from the **City's** breach of a fundamental obligation of the **Contract**.

11.4.2 No claim may be made for any alleged delay in **Substantial Completion** of the **Work** if the **Work** will be or is substantially completed by the date of **Substantial Completion** provided for in Schedule A unless acceleration has been directed by the **Commissioner** to meet the date of **Substantial Completion** set forth in Schedule A, or unless there is a provision in the **Contract** providing for additional compensation for early completion.

11.4.3 The provisions of this Article 11 apply only to claims for additional costs attributable to delay and do not preclude determinations by the **Commissioner** allowing reimbursements for additional costs for **Extra Work** pursuant to Articles 25 and 26 of this **Contract**. To the extent that any cost attributable to delay is reimbursed as part of a change order, no additional claim for compensation under this Article 11 shall be allowed.

11.5 Non-Compensable Delays. The **Contractor** agrees to make no claim for, and is deemed to have included in its bid prices for the various items of the **Contract**, the extra/additional costs attributable to any delays caused by or attributable to the items set forth below. For such items, the **Contractor** shall be compensated, if at all, solely by an extension of time to complete the performance of the **Work**, in accordance with the provisions of Article 13. Such extensions of time will be granted, if at all, pursuant to the grounds set forth in Article 13.3.

11.5.1 The acts or omissions of any third parties, including but not limited to **Other Contractors**, public/ governmental bodies (other than **City Agencies**), utilities or private enterprises, who are disclosed in the **Contract Documents** or are ordinarily encountered or generally recognized as related to the **Work**;

11.5.2 Any situation which was within the contemplation of the parties at the time of entering into the **Contract**, including any delay indicated or disclosed in the **Contract Documents** or that would be generally recognized by a reasonably prudent contractor as related to the nature of the **Work**, and/or the existence of any facility or appurtenance owned, operated or maintained by any third party, as indicated or disclosed in the **Contract Documents** or ordinarily encountered or generally recognized as related to the nature of the **Work**;

11.5.3 Restraining orders, injunctions or judgments issued by a court which were caused by a Contractor's submission, action or inaction or by a Contractor's **Means and Methods of Construction**, or by third parties, unless such order, injunction or judgment was the result of an act or omission by the **City**;

11.5.4 Any labor boycott, strike, picketing, lockout or similar situation;

11.5.5 Any shortages of supplies or materials, or unavailability of equipment, required by the **Contract Work**;

11.5.6 Climatic conditions, storms, floods, droughts, tidal waves, fires, hurricanes, earthquakes, landslides or other catastrophes or acts of God, or acts of war or of the public enemy or terrorist acts, including the **City's** reasonable responses thereto; and

11.5.7 **Extra Work** which does not significantly affect the overall completion of the **Contract**, reasonable delays in the review or issuance of change orders or field orders and/or in shop drawing reviews or approvals.

11.6 Required Content of Submission of Statement of Delay Damages

11.6.1 In the verified written statement of delay damages required by Article 11.1.2, the following information shall be provided by the **Contractor**:

11.6.1.1 For each delay, the start and end dates of the claimed periods of delay and, in addition, a description of the operations that were delayed, an explanation of how they were delayed, and the reasons for the delay, including identifying the applicable act or omission of the City listed in Article 11.4.

11.6.1.2 A detailed factual statement of the claim providing all necessary dates, locations and items of **Work** affected by the claim.

11.6.1.3 The estimated amount of additional compensation sought and a breakdown of that amount into categories as described in Article 11.7.

11.6.1.4 Any additional information requested by the **Commissioner**.

11.7 Recoverable Costs

11.7.1 Delay damages may be recoverable for the following costs actually and necessarily incurred in the performance of the **Work**:

11.7.1.1 Direct labor, including payroll taxes (subject to statutory wage caps) and supplemental benefits, based on time and materials records;

11.7.1.2 Necessary materials (including transportation to the **Site**), based on time and material records;

11.7.1.3 Reasonable rental value of necessary plant and equipment other than small tools, plus fuel/energy costs according to the applicable formula set forth in Articles 26.2.4 and/or 26.2.8, based on time and material records;

11.7.1.4 Additional insurance and bond costs;

11.7.1.5 Extended **Site** overhead, field office rental, salaries of field office staff, on-site project managers and superintendents, field office staff vehicles, **Project-**specific storage, field office utilities and telephone, and field office consumables;

11.7.1.6 Labor escalation costs based on actual costs;

11.7.1.7 Materials and equipment escalation costs based on applicable industry indices unless documentation of actual increased cost is provided;

11.7.1.8 Additional material and equipment storage costs based on actual documented costs and additional costs necessitated by extended manufacturer warranty periods; and

11.7.1.9 Extended home office overhead calculated based on the following formula:

(1) Subtract from the original **Contract** amount the amount earned by original contractual **Substantial Completion** date (not including change orders);

(2) Remove 15% overhead and profit from the calculation in item (1) by dividing the results of item (1) by 1.15;

(3) Multiply the result of item (2) by 7.25% for the total home office overhead;

(4) Multiply the result of item (3) by 7.25% for the total profit; and

(5) The total extended home office overhead will be the total of items (3) and (4).

11.7.2 Recoverable Subcontractor Costs. When the **Work** is performed by a **Subcontractor**, the **Contractor** may be paid the actual and necessary costs of such subcontracted **Work** as outlined above in Articles 11.7.1.1 through 11.7.1.8, and an additional overhead of 5% of the costs outlined in Articles 11.7.1.1 through 11.7.1.3.

11.7.3 Non-Recoverable Costs. The parties agree that the **City** will have no liability for the following items and the **Contractor** agrees it shall make no claim for the following items:

11.7.3.1 Profit, or loss of anticipated or unanticipated profit, except as provided in Article 11.7.1.9;

11.7.3.2 Consequential damages, including, but not limited to, construction or bridge loans or interest paid on such loans, loss of bonding capacity, bidding opportunities, or interest in investment, or any resulting insolvency;

11.7.3.3 Indirect costs or expenses of any nature except those included in Article 11.7.1;

11.7.3.4 Direct or indirect costs attributable to performance of **Work** where the **Contractor**, because of situations or conditions within its control, has not progressed the **Work** in a satisfactory manner; and

11.7.3.5 Attorneys' fees and dispute and claims preparation expenses.

11.8 Any claims for delay under this Article 11 are not subject to the jurisdiction of the Contract Dispute Resolution Board pursuant to the dispute resolution process set forth in Article 27.

11.9 Any compensation provided to the **Contractor** in accordance with this Article 11 will be made pursuant to a claim filed with the **Comptroller**. Nothing in this Article 11 extends the time for the **Contractor** to file an action with respect to a claim within six months after **Substantial Completion** pursuant to Article 56.

ARTICLE 12. COORDINATION WITH OTHER CONTRACTORS

12.1 During the progress of the **Work**, **Other Contractors** may be engaged in performing other work or may be awarded other contracts for additional work on this **Project**. In that event, the **Contractor** shall coordinate the **Work** to be done hereunder with the work of such **Other Contractors** and the **Contractor** shall fully cooperate with such **Other Contractors** and carefully fit its own **Work** to that provided under other contracts as may be directed by the **Engineer**. The **Contractor** shall not commit or permit any act which will interfere with the performance of work by any **Other Contractors**.

12.2 If the **Engineer** determines that the **Contractor** is failing to coordinate its **Work** with the work of **Other Contractors** as the **Engineer** has directed, then the **Commissioner** shall have the right to withhold any payments otherwise due hereunder until the **Contractor** completely complies with the **Engineer's** directions.

12.3 The **Contractor** shall notify the **Engineer** in writing if any **Other Contractor** on this **Project** is failing to coordinate its work with the **Work** of this **Contract**. If the **Engineer** finds such charges to be true, the **Engineer** shall promptly issue such directions to the **Other Contractor** with respect thereto as the situation may require. The **City** shall not, however, be liable for any damages suffered by any **Other Contractor's** failure to coordinate its work with the **Work** of this **Contract** or by reason of the **Other Contractor's** failure to promptly comply with the directions so issued by the **Engineer**, or by reason of any **Other Contractor's** default in performance, it being understood that the **City** does not guarantee the responsibility or continued efficiency of any contractor. The **Contractor** agrees to make no claim against the **City** for any damages relating to or arising out of any directions issued by the **Engineer** pursuant to this Article 12 (including but not limited to the failure of any **Other Contractor** to comply or promptly comply with such directions), or the failure of any **Other Contractor** to coordinate its work, or the default in performance of any **Other Contractor**.

12.4 The **Contractor** shall indemnify and hold the **City** harmless from any and all claims or judgments for damages and from costs and expenses to which the **City** may be subjected or which it may suffer or incur by reason of the **Contractor's** failure to comply with the **Engineer's** directions promptly; and the **Comptroller** shall have the right to exercise the powers reserved in Article 23 with respect to any claims which may be made for damages due to the **Contractor's** failure to comply with the **Engineer's** directions promptly. Insofar as the facts and **Law** relating to any claim would preclude the **City** from being completely indemnified by the **Contractor**, the **City** shall be partially indemnified by the **Contractor** to the fullest extent provided by **Law**.

12.5 Should the **Contractor** sustain any damage through any act or omission of any **Other Contractor** having a contract with the **City** for the performance of work upon the **Site** or of work which may be necessary to be performed for the proper prosecution of the **Work** to be performed hereunder, or through any act or omission of a subcontractor of such **Other Contractor**, the **Contractor** shall have no claim against the **City** for such damage, but shall have a right to recover such damage from the **Other**

Contractor under the provision similar to the following provisions which apply to this **Contract** and have been or will be inserted in the contracts with such **Other Contractors**:

12.5.1 Should any **Other Contractor** having or who shall hereafter have a contract with the **City** for the performance of work upon the **Site** sustain any damage through any act or omission of the **Contractor** hereunder or through any act or omission of any **Subcontractor** of the **Contractor**, the **Contractor** agrees to reimburse such **Other Contractor** for all such damages and to defend at its own expense any action based upon such claim and if any judgment or claim (even if the allegations of the action are without merit) against the **City** shall be allowed the **Contractor** shall pay or satisfy such judgment or claim and pay all costs and expenses in connection therewith and agrees to indemnify and hold the **City** harmless from all such claims. Insofar as the facts and **Law** relating to any claim would preclude the **City** from being completely indemnified by the **Contractor**, the **City** shall be partially indemnified by the **Contractor** to the fullest extent provided by **Law**.

12.6 The **City's** right to indemnification hereunder shall in no way be diminished, waived or discharged by its recourse to assessment of liquidated damages as provided in Article 15, or by the exercise of any other remedy provided for by **Contract** or by **Law**.

ARTICLE 13. EXTENSION OF TIME FOR PERFORMANCE

13.1 If performance by the **Contractor** is delayed for a reason set forth in Article 13.3, the **Contractor** may be allowed a reasonable extension of time in conformance with this Article 13 and the **PPB** Rules.

13.2 Any extension of time may be granted only by the **ACCO** or by the Board for the Extension of Time (hereafter "Board") (as set forth below) upon written application by the **Contractor**.

13.3 Grounds for Extension: If such application is made, the **Contractor** shall be entitled to an extension of time for delay in completion of the **Work** caused solely:

13.3.1 By the acts or omissions of the **City**, its officials, agents or employees; or

13.3.2 By the act or omissions of **Other Contractors** on this **Project**; or

13.3.3 By supervening conditions entirely beyond the control of either party hereto (such as, but not limited to, acts of God or the public enemy, excessive inclement weather, war or other national emergency making performance temporarily impossible or illegal, or strikes or labor disputes not brought about by any act or omission of the **Contractor**).

13.3.4 The **Contractor** shall, however, be entitled to an extension of time for such causes only for the number of **Days** of delay which the **ACCO** or the Board may determine to be due solely to such causes, and then only if the **Contractor** shall have strictly complied with all of the requirements of Articles 9 and 10.

13.4 The **Contractor** shall not be entitled to receive a separate extension of time for each of several causes of delay operating concurrently, but, if at all, only for the actual period of delay in completion of the **Work** as determined by the **ACCO** or the Board, irrespective of the number of causes contributing to produce such delay. If one of several causes of delay operating concurrently results from any act, fault or omission of the **Contractor** or of its **Subcontractors** or **Materialmen**, and would of itself (irrespective

of the concurrent causes) have delayed the **Work**, no extension of time will be allowed for the period of delay resulting from such act, fault or omission.

13.5 The determination made by the **ACCO** or the Board on an application for an extension of time shall be binding and conclusive on the **Contractor**.

13.6 The **ACCO** or the Board acting entirely within their discretion may grant an application for an extension of time for causes of delay other than those herein referred.

13.7 Permitting the **Contractor** to continue with the **Work** after the time fixed for its completion has expired, or after the time to which such completion may have been extended has expired, or the making of any payment to the **Contractor** after such time, shall in no way operate as a waiver on the part of the **City** of any of its rights under this **Contract**.

13.8 Application for Extension of Time:

13.8.1 Before the **Contractor's** time extension request will be considered, the **Contractor** shall notify the **ACCO** of the condition which allegedly has caused or is causing the delay, and shall submit a written application to the **ACCO** identifying:

13.8.1(a) The **Contractor**; the registration number; and **Project** description;

13.8.1(b) Liquidated damage assessment rate, as specified in the **Contract**;

13.8.1(c) Original total bid price;

13.8.1(d) The original **Contract** start date and completion date;

13.8.1(e) Any previous time extensions granted (number and duration); and

13.8.1(f) The extension of time requested.

13.8.2 In addition, the application for extension of time shall set forth in detail:

13.8.2(a) The nature of each alleged cause of delay in completing the **Work**;

13.8.2(b) The date upon which each such cause of delay began and ended and the number of **Days** attributable to each such cause;

13.8.2(c) A statement that the **Contractor** waives all claims except for those delineated in the application, and the particulars of any claims which the **Contractor** does not agree to waive. For time extensions for **Substantial Completion** and final completion payments, the application shall include a detailed statement of the dollar amounts of each element of claim item reserved; and

13.8.2(d) A statement indicating the **Contractor's** understanding that the time extension is granted only for purposes of permitting continuation of **Contract** performance and payment for **Work** performed and that the **City** retains its right to conduct an investigation and assess liquidated damages as appropriate in the future.

13.9 Analysis and Approval of Time Extensions:

13.9.1 For time extensions for partial payments, a written determination shall be made by the **ACCO** who may, for good and sufficient cause, extend the time for the performance of the **Contract** as follows:

13.9.1(a) If the **Work** is to be completed within six (6) months, the time for performance may be extended for sixty (60) **Days**;

13.9.1(b) If the **Work** is to be completed within less than one (1) year but more than six (6) months, an extension of ninety (90) **Days** may be granted;

13.9.1(c) If the **Contract** period exceeds one (1) year, besides the extension granted in Article 13.9.1(b), an additional thirty (30) **Days** may be granted for each multiple of six (6) months involved beyond the one (1) year period; or

13.9.1(d) If exceptional circumstances exist, the **ACCO** may extend the time for performance beyond the extensions in Articles 13.9.1(a), 13.9.1(b), and 13.9.1(c). In that event, the **ACCO** shall file with the Mayor's Office of Contract Services a written explanation of the exceptional circumstances.

13.9.2 For extensions of time for **Substantial Completion** and final completion payments, the **Engineer**, in consultation with the **ACCO**, shall prepare a written analysis of the delay (including a preliminary determination of the causes of delay, the beginning and end dates for each such cause of delay, and whether the delays are excusable under the terms of this **Contract**). The report shall be subject to review by and approval of the Board, which shall have authority to question its analysis and determinations and request additional facts or documentation. The report as reviewed and made final by the Board shall be made a part of the **Agency** contract file. Neither the report itself nor anything contained therein shall operate as a waiver or release of any claim the **City** may have against the **Contractor** for either actual or liquidated damages.

13.9.3 Approval Mechanism for Time Extensions for **Substantial Completion** or Final Completion Payments: An extension shall be granted only with the approval of the Board which is comprised of the **ACCO** of the **Agency**, the **City** Corporation Counsel, and the **Comptroller**, or their authorized representatives.

13.9.4 Neither the granting of any application for an extension of time to the **Contractor** or any **Other Contractor** on this **Project** nor the papers, records or reports related to any application for or grant of an extension of time or determination related thereto shall be referred to or offered in evidence by the **Contractor** or its attorneys in any action or proceeding.

13.10 No Damage for Delay: The **Contractor** agrees to make no claim for damages for delay in the performance of this **Contract** occasioned by any act or omission to act of the **City** or any of its representatives, except as provided for in Article 11.

ARTICLE 14. COMPLETION AND FINAL ACCEPTANCE OF THE WORK

14.1 Date for **Substantial Completion**: The **Contractor** shall substantially complete the **Work** within the time fixed in Schedule A of the General Conditions, or within the time to which such **Substantial Completion** may be extended.

14.2 Determining the Date of **Substantial Completion**: The **Work** will be deemed to be substantially complete when the two conditions set forth below have been met.

14.2.1 Inspection: The **Engineer** or **Resident Engineer**, as applicable, has inspected the **Work** and has made a written determination that it is substantially complete.

14.2.2 Approval of **Final Approved Punch List** and Date for **Final Acceptance**: Following inspection of the **Work**, the **Engineer/Resident Engineer** shall furnish the **Contractor** with a final punch list, specifying all items of **Work** to be completed and proposing dates for the completion of each specified item of **Work**. The **Contractor** shall then submit in writing to the **Engineer/Resident Engineer** within ten (10) **Days** of the **Engineer/Resident Engineer** furnishing the final punch list either acceptance of the dates or proposed alternative dates for the completion of each specified item of **Work**. If the **Contractor** neither accepts the dates nor proposes alternative dates within ten (10) **Days**, the schedule proposed by the **Engineer/Resident Engineer** shall be deemed accepted. If the **Contractor** proposes alternative dates, then, within a reasonable time after receipt, the **Engineer/Resident Engineer**, in a written notification to the **Contractor**, shall approve the **Contractor's** completion dates or, if they are unable to agree, the **Engineer/Resident Engineer** shall establish dates for the completion of each item of **Work**. The latest completion date specified shall be the date for **Final Acceptance** of the **Work**.

14.3 Date of **Substantial Completion**. The date of approval of the **Final Approved Punch List**, shall be the date of **Substantial Completion**. The date of approval of the **Final Approved Punch List** shall be either (a) if the **Contractor** approves the final punch list and proposed dates for completion furnished by the **Engineer/Resident Engineer**, the date of the **Contractor**'s approval; or (b) if the **Contractor** neither accepts the dates nor proposes alternative dates, ten (10) **Days** after the **Engineer/Resident Engineer** furnishes the **Contractor** with a final punch list and proposed dates for completion; or (c) if the **Contractor** proposes alternative dates, the date that the **Engineer/Resident Engineer** sends written notification to the **Contractor** either approving the **Contractor**'s proposed alternative dates or establishing dates for the completion for each item of **Work**.

14.4 Determining the Date of **Final Acceptance**: The **Work** will be accepted as final and complete as of the date of the **Engineer**'s/**Resident Engineer**'s inspection if, upon such inspection, the **Engineer/Resident Engineer** finds that all items on the **Final Approved Punch List** are complete and no further **Work** remains to be done. The **Commissioner** will then issue a written determination of **Final Acceptance**.

14.5 Request for Inspection: Inspection of the **Work** by the **Engineer/Resident Engineer** for the purpose of **Substantial Completion** or **Final Acceptance** shall be made within fourteen (14) **Days** after receipt of the **Contractor's** written request therefor.

14.6 Request for Re-inspection: If upon inspection for the purpose of **Substantial Completion** or **Final Acceptance**, the **Engineer/Resident Engineer** determines that there are items of **Work** still to be performed, the **Contractor** shall promptly perform them and then request a re-inspection. If upon re-inspection, the **Engineer/Resident Engineer** determines that the **Work** is substantially complete or finally accepted, the date of such re-inspection shall be the date of **Substantial Completion** or **Final Acceptance**. Re-inspection by the **Engineer/Resident Engineer** shall be made within ten (10) **Days** after receipt of the **Contractor's** written request therefor.

14.7 Initiation of Inspection by the **Engineer/Resident Engineer**: If the **Contractor** does not request inspection or re-inspection of the **Work** for the purpose of **Substantial Completion** or **Final Acceptance**, the **Engineer/Resident Engineer** may initiate such inspection or re-inspection.

ARTICLE 15. LIQUIDATED DAMAGES

15.1 In the event the **Contractor** fails to substantially complete the **Work** within the time fixed for such **Substantial Completion** in Schedule A of the General Conditions, plus authorized time extensions, or if the **Contractor**, in the sole determination of the **Commissioner**, has abandoned the **Work**, the **Contractor** shall pay to the **City** the sum fixed in Schedule A of the General Conditions, for each and every **Day** that the time consumed in substantially completing the **Work** exceeds the time allowed therefor; which said sum, in view of the difficulty of accurately ascertaining the loss which the **City** will suffer by reason of delay in the **Substantial Completion** of the **Work** hereunder, is hereby fixed and agreed as the liquidated damages that the **City** will suffer by reason of such delay, and not as a penalty. This Article 15 shall also apply to the **Contractor** whether or not the **Contractor** is defaulted pursuant to Chapter X of this **Contract**. Neither the failure to assess liquidated damages nor the granting of any time extension shall operate as a waiver or release of any claim the **City** may have against the **Contractor** for either actual or liquidated damages.

15.2 Liquidated damages received hereunder are not intended to be nor shall they be treated as either a partial or full waiver or discharge of the **City's** right to indemnification, or the **Contractor's** obligation to indemnify the **City**, or to any other remedy provided for in this **Contract** or by **Law**.

15.3 The **Commissioner** may deduct and retain out of the monies which may become due hereunder, the amount of any such liquidated damages; and in case the amount which may become due hereunder shall be less than the amount of liquidated damages suffered by the **City**, the **Contractor** shall be liable to pay the difference.

ARTICLE 16. OCCUPATION OR USE PRIOR TO COMPLETION

16.1 Unless otherwise provided for in the **Specifications**, the **Commissioner** may take over, use, occupy or operate any part of the **Work** at any time prior to **Final Acceptance**, upon written notification to the **Contractor**. The **Engineer** or **Resident Engineer**, as applicable, shall inspect the part of the **Work** to be taken over, used, occupied, or operated, and will furnish the **Contractor** with a written statement of the **Work**, if any, which remains to be performed on such part. The **Contractor** shall not object to, nor interfere with, the **Commissioner's** decision to exercise the rights granted by Article 16. In the event the **Commissioner** takes over, uses, occupies, or operates any part of the **Work:**

16.1.1 the **Engineer/Resident Engineer** shall issue a written determination of **Substantial Completion** with respect to such part of the **Work**;

16.1.2 the **Contractor** shall be relieved of its absolute obligation to protect such part of the unfinished **Work** in accordance with Article 7;

16.1.3 the **Contractor's** guarantee on such part of the **Work** shall begin on the date of such use by the **City**; and;

16.1.4 the **Contractor** shall be entitled to a return of so much of the amount retained in accordance with Article 21 as it relates to such part of the **Work**, except so much thereof as may be retained under Articles 24 and 44.

CHAPTER IV: SUBCONTRACTS AND ASSIGNMENTS

ARTICLE 17. SUBCONTRACTS

17.1 The **Contractor** shall not make subcontracts totaling an amount more than the percentage of the total **Contract** price fixed in Schedule A of the General Conditions, without prior written permission from the **Commissioner**. All subcontracts made by the **Contractor** shall be in writing. No **Work** may be performed by a **Subcontractor** prior to the **Contractor** entering into a written subcontract with the **Subcontractor** and complying with the provisions of this Article 17.

17.2 Before making any subcontracts, the **Contractor** shall submit a written statement to the **Commissioner** giving the name and address of the proposed **Subcontractor**; the portion of the **Work** and materials which it is to perform and furnish; the cost of the subcontract; the VENDEX questionnaire if required; the proposed subcontract if requested by the **Commissioner**; and any other information tending to prove that the proposed **Subcontractor** has the necessary facilities, skill, integrity, past experience, and financial resources to perform the **Work** in accordance with the terms and conditions of this **Contract**.

17.3 In addition to the requirements in Article 17.2, **Contractor** is required to list the **Subcontractor** in the web based Subcontractor Reporting System through the City's Payee Information Portal (PIP), available at www.nyc.gov/pip.[1] For each **Subcontractor** listed, **Contractor** is required to provide the following information: maximum contract value, description of **Subcontractor's** Work, start and end date of the subcontract and identification of the **Subcontractor**'s industry. Thereafter, **Contractor** will be required to report in the system the payments made to each **Subcontractor** within 30 days of making the payment. If any of the required information changes throughout the Term of the **Contract**, **Contractor** will be required to revise the information in the system.

Failure of the **Contractor** to list a **Subcontractor** and/or to report **Subcontractor** payments in a timely fashion may result in the **Commissioner** declaring the **Contractor** in default of the **Contract** and will subject **Contractor** to liquidated damages in the amount of $100 per day for each day that the **Contractor** fails to identify a **Subcontractor** along with the required information about the **Subcontractor** and/or fails to report payments to a **Subcontractor**, beyond the time frames set forth herein or in the notice from the **City**. Article 15 shall govern the issue of liquidated damages.

17.4 If an approved **Subcontractor** elects to subcontract any portion of its subcontract, the proposed sub-subcontract shall be submitted in the same manner as directed above.

17.5 The **Commissioner** will notify the **Contractor** in writing whether the proposed **Subcontractor** is approved. If the proposed **Subcontractor** is not approved, the **Contractor** may submit another proposed **Subcontractor** unless the **Contractor** decides to do the **Work**. No **Subcontractor** shall be permitted to enter or perform any work on the **Site** unless approved.

17.6 Before entering into any subcontract hereunder, the **Contractor** shall provide the proposed **Subcontractor** with a complete copy of this document and inform the proposed **Subcontractor** fully and completely of all provisions and requirements of this **Contract** relating either directly or indirectly to the **Work** to be performed and the materials to be furnished under such subcontract, and every such

[1] In order to use the new system, a PIP account will be required. Detailed instructions on creating a PIP account and using the new system are also available at www.nyc.gov/pip. Additional assistance with PIP may be obtained by emailing the Financial Information Services Agency Help Desk at pip@fisa.nyc.gov.

Subcontractor shall expressly stipulate that all labor performed and materials furnished by the **Subcontractor** shall strictly comply with the requirements of this **Contract**.

17.7 Documents given to a prospective **Subcontractor** for the purpose of soliciting the **Subcontractor's** bid shall include either a copy of the bid cover or a separate information sheet setting forth the **Project** name, the **Contract** number (if available), the **Agency** (as noted in Article 2.1.6), and the **Project's** location.

17.8 The **Commissioner's** approval of a **Subcontractor** shall not relieve the **Contractor** of any of its responsibilities, duties, and liabilities hereunder. The **Contractor** shall be solely responsible to the **City** for the acts or defaults of its **Subcontractor** and of such **Subcontractor's** officers, agents, and employees, each of whom shall, for this purpose, be deemed to be the agent or employee of the **Contractor** to the extent of its subcontract.

17.9 If the **Subcontractor** fails to maintain the necessary facilities, skill, integrity, past experience, and financial resources (other than due to the **Contractor's** failure to make payments where required) to perform the **Work** in accordance with the terms and conditions of this **Contract**, the **Contractor** shall promptly notify the **Commissioner** and replace such **Subcontractor** with a newly approved **Subcontractor** in accordance with this Article 17.

17.10 The **Contractor** shall be responsible for ensuring that all **Subcontractors** performing **Work** at the **Site** maintain all insurance required by **Law**.

17.11 The **Contractor** shall promptly, upon request, file with the **Engineer** a conformed copy of the subcontract and its cost. The subcontract shall provide the following:

17.11.1 Payment to **Subcontractors**: The agreement between the **Contractor** and its **Subcontractor** shall contain the same terms and conditions as to method of payment for **Work**, labor, and materials, and as to retained percentages, as are contained in this **Contract**.

17.11.2 Prevailing Rate of Wages: The agreement between the **Contractor** and its **Subcontractor** shall include the prevailing wage rates and supplemental benefits to be paid in accordance with Labor Law Section 220.

17.11.3 Section 6-123 of the Administrative Code: Pursuant to the requirements of Section 6-123 of the Administrative Code, every agreement between the **Contractor** and a **Subcontractor** in excess of fifty thousand ($50,000) dollars shall include a provision that the **Subcontractor** shall not engage in any unlawful discriminatory practice as defined in Title VIII of the Administrative Code (Section 8-101 *et seq*.).

17.11.4 All requirements required pursuant to federal and/or state grant agreement(s), if applicable to the **Work**.

17.12 The **Commissioner** may deduct from the amounts certified under this **Contract** to be due to the **Contractor**, the sum or sums due and owing from the **Contractor** to the **Subcontractors** according to the terms of the said subcontracts, and in case of dispute between the **Contractor** and its **Subcontractor**, or **Subcontractors**, as to the amount due and owing, the **Commissioner** may deduct and withhold from the amounts certified under this **Contract** to be due to the **Contractor** such sum or sums as may be claimed by such **Subcontractor**, or **Subcontractors**, in a sworn affidavit, to be due and owing until such time as such claim or claims shall have been finally resolved.

17.13 On contracts where performance bonds and payment bonds are executed, the **Contractor** shall include on each requisition for payment the following data: **Subcontractor's** name, value of the subcontract, total amount previously paid to **Subcontractor** for **Work** previously requisitioned, and the amount, including retainage, to be paid to the **Subcontractor** for **Work** included in the requisition.

17.14 On **Contracts** where performance bonds and payment bonds are not executed, the **Contractor** shall include with each requisition for payment submitted hereunder, a signed statement from each and every **Subcontractor** and/or **Materialman** for whom payment is requested in such requisition. Such signed statement shall be on the letterhead of the **Subcontractor** and/or **Materialman** for whom payment is requested and shall (i) verify that such **Subcontractor** and/or **Materialman** has been paid in full for all **Work** performed and/or material supplied to date, exclusive of any amount retained and any amount included on the current requisition, and (ii) state the total amount of retainage to date, exclusive of any amount retained on the current requisition.

ARTICLE 18. ASSIGNMENTS

18.1 The **Contractor** shall not assign, transfer, convey or otherwise dispose of this **Contract**, or the right to execute it, or the right, title or interest in or to it or any part thereof, or assign, by power of attorney or otherwise any of the monies due or to become due under this **Contract**, unless the previous written consent of the **Commissioner** shall first be obtained thereto, and the giving of any such consent to a particular assignment shall not dispense with the necessity of such consent to any further or other assignments.

18.2 Such assignment, transfer, conveyance or other disposition of this **Contract** shall not be valid until filed in the office of the **Commissioner** and the **Comptroller**, with the written consent of the **Commissioner** endorsed thereon or attached thereto.

18.3 Failure to obtain the previous written consent of the **Commissioner** to such an assignment, transfer, conveyance or other disposition, may result in the revocation and annulment of this **Contract**. The **City** shall thereupon be relieved and discharged from any further liability to the **Contractor**, its assignees, transferees or sublessees, who shall forfeit and lose all monies therefor earned under the **Contract**, except so much as may be required to pay the **Contractor's** employees.

18.4 The provisions of this clause shall not hinder, prevent, or affect an assignment by the **Contractor** for the benefit of its creditors made pursuant to the **Laws** of the State of New York.

18.5 This **Contract** may be assigned by the **City** to any corporation, agency or instrumentality having authority to accept such assignment.

CHAPTER V: CONTRACTOR'S SECURITY AND GUARANTEE

ARTICLE 19. SECURITY DEPOSIT

19.1 If performance and payment bonds are required, the **City** shall retain the bid security to ensure that the successful bidder executes the **Contract** and furnishes the required payment and performance security within ten (10) **Days** after notice of the award of the **Contract**. If the successful bidder fails to execute the **Contract** and furnish the required payment and performance security, the **City** shall retain such bid security as set forth in the Information for Bidders. If the successful bidder executes the

Contract and furnishes the required payment and performance security, the **City** shall return the bid security within a reasonable time after the furnishing of such bonds and execution of the **Contract** by the **City**.

19.2 If performance and payment bonds are not required, the bid security shall be retained by the **City** as security for the **Contractor**'s faithful performance of the **Contract**. If partial payments are provided, the bid security will be returned to the **Contractor** after the sum retained under Article 21 equals the amount of the bid security, subject to other provisions of this **Contract**. If partial payments are not provided, the bid security will be released when final payment is certified by the **City** for payment.

19.3 If the **Contractor** is declared in default under Article 48 prior to the return of the deposit, or if any claim is made such as referred to in Article 23, the amount of such deposit, or so much thereof as the **Comptroller** may deem necessary, may be retained and then applied by the **Comptroller**:

19.3.1 To compensate the **City** for any expense, loss or damage suffered or incurred by reason of or resulting from such default, including the cost of re-letting and liquidated damages; or

19.3.2 To indemnify the **City** against any and all claims.

ARTICLE 20. PAYMENT GUARANTEE

20.1 On **Contracts** where one hundred (100%) percent performance bonds and payment bonds are executed, this Article 20 does not apply.

20.2 In the event the terms of this **Contract** do not require the **Contractor** to provide a payment bond or where the **Contract** does not require a payment bond for one hundred (100%) percent of the **Contract** price, the **City** shall, in accordance with the terms of this Article 20, guarantee payment of all lawful claims for:

20.2.1 Wages and compensation for labor performed and/or services rendered; and

20.2.2 Materials, equipment, and supplies provided, whether incorporated into the **Work** or not, when demands have been filed with the **City** as provided hereinafter by any person, firm, or corporation which furnished labor, material, equipment, supplies, or any combination thereof, in connection with the **Work** performed hereunder (hereinafter referred to as the "beneficiary") at the direction of the **City** or the **Contractor**.

20.3 The provisions of Article 20.2 are subject to the following limitations and conditions:

20.3.1 If the **Contractor** provides a payment bond for a value that is less than one hundred (100%) percent of the value of the **Contract Work**, the payment bond provided by the **Contractor** shall be primary (and non-contributing) to the payment guarantee provided under this Article 20.

20.3.2 The guarantee is made for the benefit of all beneficiaries as defined in Article 20.2 provided that those beneficiaries strictly adhere to the terms and conditions of Article 20.3.4 and 20.3.5.

20.3.3 Nothing in this Article 20 shall prevent a beneficiary providing labor, services or material for the **Work** from suing the **Contractor** for any amounts due and owing the beneficiary by the **Contractor**.

20.3.4 Every person who has furnished labor or material, to the **Contractor** or to a **Subcontractor** of the **Contractor**, in the prosecution of the **Work** and who has not been paid in full therefor before the expiration of a period of ninety (90) **Days** after the date on which the last of the labor was performed or material was furnished by him/her for which the claim is made, shall have the right to sue on this payment guarantee in his/her own name for the amount, or the balance thereof, unpaid at the time of commencement of the action; provided, however, that a person having a direct contractual relationship with a **Subcontractor** of the **Contractor** but no contractual relationship express or implied with the **Contractor** shall not have a right of action upon the guarantee unless he/she shall have given written notice to the **Contractor** within one hundred twenty (120) **Days** from the date on which the last of the labor was performed or the last of the material was furnished, for which his/her claim is made, stating with substantial accuracy the amount claimed and the name of the party to whom the material was furnished or for whom the labor was performed. The notice shall be served by delivering the same personally to the **Contractor** or by mailing the same by registered mail, postage prepaid, in an envelope addressed to the **Contractor** at any place where it maintains an office or conducts its business; provided, however, that where such notice is actually received by the **Contractor** by other means, such notice shall be deemed sufficient.

20.3.5 Except as provided in Labor Law Section 220-g, no action on this payment guarantee shall be commenced after the expiration of the one-year limitations period set forth in Section 137(4)(b) of the State Finance Law.

20.3.6 The **Contractor** shall promptly forward to the **City** any notice or demand received pursuant to Article 20.3.4. The **Contractor** shall inform the **City** of any defenses to the notice or demand and shall forward to the **City** any documents the **City** requests concerning the notice or demand.

20.3.7 All demands made against the **City** by a beneficiary of this payment guarantee shall be presented to the **Engineer** along with all written documentation concerning the demand which the **Engineer** deems reasonably appropriate or necessary, which may include, but shall not be limited to: the subcontract; any invoices presented to the **Contractor** for payment; the notarized statement of the beneficiary that the demand is due and payable, that a request for payment has been made of the **Contractor** and that the demand has not been paid by the **Contractor** within the time allowed for such payment by the subcontract; and copies of any correspondence between the beneficiary and the **Contractor** concerning such demand. The **City** shall notify the **Contractor** that a demand has been made. The **Contractor** shall inform the **City** of any defenses to the demand and shall forward to the **City** any documents the **City** requests concerning the demand.

20.3.8 The **City** shall make payment only if, after considering all defenses presented by the **Contractor**, it determines that the payment is due and owing to the beneficiary making the demand.

20.3.9 No beneficiary shall be entitled to interest from the **City**, or to any other costs, including, but not limited to, attorneys' fees, except to the extent required by State Finance Law Section 137.

20.4 Upon the receipt by the **City** of a demand pursuant to this Article 20, the **City** may withhold from any payment otherwise due and owing to the **Contractor** under this **Contract** an amount sufficient to satisfy the demand.

20.4.1 In the event the **City** determines that the demand is valid, the **City** shall notify the **Contractor** of such determination and the amount thereof and direct the **Contractor** to immediately pay such amount to the beneficiary. In the event the **Contractor**, within seven (7) **Days** of receipt of such notification from the **City**, fails to pay the beneficiary, such failure shall constitute an automatic and irrevocable assignment of payment by the **Contractor** to the beneficiary for the amount of the demand determined by the **City** to be valid. The **Contractor**, without further notification or other process, hereby gives its unconditional consent to such assignment of payment to the beneficiary and authorizes the **City**, on its behalf, to take all necessary actions to implement such assignment of payment, including without limitation the execution of any instrument or documentation necessary to effectuate such assignment.

20.4.2 In the event that the amount otherwise due and owing to the **Contractor** by the **City** is insufficient to satisfy such demand, the **City** may, at its option, require payment from the **Contractor** of an amount sufficient to cover such demand and exercise any other right to require or recover payment which the **City** may have under **Law** or **Contract**.

20.4.3 In the event the **City** determines that the demand is invalid, any amount withheld pending the **City**'s review of such demand shall be paid to the **Contractor**; provided, however, no lien has been filed. In the event a claim or an action has been filed, the terms and conditions set forth in Article 23 shall apply. In the event a lien has been filed, the parties will be governed by the provisions of the Lien Law of the State of New York.

20.5 The provisions of this Article 20 shall not prevent the **City** and the **Contractor** from resolving disputes in accordance with the **PPB** Rules, where applicable.

20.6 In the event the **City** determines that the beneficiary is entitled to payment pursuant to this Article 20, such determination and any defenses and counterclaims raised by the **Contractor** shall be taken into account in evaluating the **Contractor's** performance.

20.7 Nothing in this Article 20 shall relieve the **Contractor** of the obligation to pay the claims of all persons with valid and lawful claims against the **Contractor** relating to the **Work**.

20.8 The **Contractor** shall not require any performance, payment or other bonds of any **Subcontractor** if this **Contract** does not require such bonds of the **Contractor**.

20.9 The payment guarantee made pursuant to this Article 20 shall be construed in a manner consistent with Section 137 of the State Finance Law and shall afford to persons furnishing labor or materials to the **Contractor** or its **Subcontractors** in the prosecution of the **Work** under this **Contract** all of the rights and remedies afforded to such persons by such section, including but not limited to, the right to commence an action against the **City** on the payment guarantee provided by this Article 20 within the one-year limitations period set forth in Section 137(4)(b).

ARTICLE 21. RETAINED PERCENTAGE

21.1 If this **Contract** requires one hundred (100%) percent performance and payment security, then as further security for the faithful performance of this **Contract**, the **Commissioner** shall deduct, and

retain until the substantial completion of the **Work**, five (5%) percent of the value of **Work** certified for payment in each partial payment voucher.

21.2 If this **Contract** does not require one hundred (100%) percent performance and payment security and if the price for which this **Contract** was awarded does not exceed one million ($1,000,000) dollars, then as further security for the faithful performance of this **Contract**, the **Commissioner** shall deduct, and retain until the substantial completion of the **Work**, five (5%) percent of the value of **Work** certified for payment in each partial payment voucher.

21.3 If this **Contract** does not require one hundred (100%) percent performance and payment security and if the price for which this **Contract** was awarded exceeds one million ($1,000,000) dollars, then as further security for the faithful performance of this **Contract,** the **Commissioner** shall deduct, and retain until the substantial completion of the **Work**, up to ten (10%) percent of the value of **Work** certified for payment in each partial payment voucher. The percentage to be retained is set forth in Schedule A of the General Conditions.

ARTICLE 22. INSURANCE

22.1 Types of Insurance: The **Contractor** shall procure and maintain the following types of insurance if, and as indicated, in Schedule A of the General Conditions (with the minimum limits and special conditions specified in Schedule A). Such insurance shall be maintained from the date the **Contractor** is required to provide Proof of Insurance pursuant to Article 22.3.1 through the date of completion of all required **Work** (including punch list work as certified in writing by the **Resident Engineer**), except for insurance required pursuant to Article 22.1.4, which may terminate upon **Substantial Completion** of the **Contract**. All insurance shall meet the requirements set forth in this Article 22. Wherever this Article requires that insurance coverage be "at least as broad" as a specified form (including all ISO forms), there is no obligation that the form itself be used, provided that the **Contractor** can demonstrate that the alternative form or endorsement contained in its policy provides coverage at least as broad as the specified form.

22.1.1 Commercial General Liability Insurance: The **Contractor** shall provide Commercial General Liability Insurance covering claims for property damage and/or bodily injury, including death, which may arise from any of the operations under this **Contract**. Coverage under this insurance shall be at least as broad as that provided by the latest edition of Insurance Services Office ("ISO") Form CG 0001. Such insurance shall be "occurrence" based rather than "claims-made" and include, without limitation, the following types of coverage: premises operations; products and completed operations; contractual liability (including the tort liability of another assumed in a contract); broad form property damage; independent contractors; explosion, collapse and underground (XCU); construction means and methods; and incidental malpractice. Such insurance shall contain a "per project" aggregate limit, as specified in Schedule A, that applies separately to operations under this **Contract**.

22.1.1(a) Such Commercial General Liability Insurance shall name the **City** as an Additional Insured. Coverage for the City shall specifically include the **City's** officials and employees, be at least as broad as the latest edition of ISO Form CG 20 10 and provide completed operations coverage at least as broad as the latest edition of ISO Form CG 20 37.

22.1.1(b) Such Commercial General Liability Insurance shall name all other entities designated as additional insureds in Schedule A but only for claims arising from the

Contractor's operations under this **Contract**, with coverage at least as broad as the latest edition of ISO Form CG 20 26.

22.1.1(c) If the **Work** requires a permit from the Department of Buildings pursuant to 1 RCNY Section 101-08, the **Contractor** shall provide Commercial General Liability Insurance with limits of at least those required by 1 RCNY section 101-08 or greater limits required by the Agency in accordance with Schedule A. If the **Work** does not require such a permit, the minimum limits shall be those provided for in Schedule A.

22.1.1(d) If any of the **Work** includes repair of a waterborne vessel owned by or to be delivered to the **City**, such Commercial General Liability shall include, or be endorsed to include, Ship Repairer's Legal Liability Coverage to protect against, without limitation, liability arising from navigation of such vessels prior to delivery to and acceptance by the **City**.

22.1.2 Workers' Compensation Insurance, Employers' Liability Insurance, and Disability Benefits Insurance: The **Contractor** shall provide, and shall cause its **Subcontractors** to provide, Workers Compensation Insurance, Employers' Liability Insurance, and Disability Benefits Insurance in accordance with the **Laws** of the State of New York on behalf of all employees providing services under this **Contract** (except for those employees, if any, for which the **Laws** require insurance only pursuant to Article 22.1.3).

22.1.3 United States Longshoremen's and Harbor Workers Act and/or Jones Act Insurance: If specified in Schedule A of the General Conditions or if required by **Law**, the **Contractor** shall provide insurance in accordance with the United States Longshoremen's and Harbor Workers Act and/or the Jones Act, on behalf of all qualifying employees providing services under this **Contract**.

22.1.4 Builders Risk Insurance: If specified in Schedule A of the General Conditions, the **Contractor** shall provide Builders Risk Insurance on a completed value form for the total value of the **Work** through **Substantial Completion** of the **Work** in its entirety. Such insurance shall be provided on an All Risk basis and include coverage, without limitation, for windstorm (including named windstorm), storm surge, flood and earth movement. Unless waived by the **Commissioner**, it shall include coverage for ordinance and law, demolition and increased costs of construction, debris removal, pollutant clean up and removal, and expediting costs. Such insurance shall cover, without limitation, (a) all buildings and/or structures involved in the **Work**, as well as temporary structures at the **Site**, and (b) any property that is intended to become a permanent part of such building or structure, whether such property is on the **Site**, in transit or in temporary storage. Policies shall name the **Contractor** as Named Insured and list the **City** as both an Additional Insured and a Loss Payee as its interest may appear.

22.1.4(a) Policies of such insurance shall specify that, in the event a loss occurs at an occupied facility, occupancy of such facility is permitted without the consent of the issuing insurance company.

22.1.4(b) Such insurance may be provided through an Installation Floater, at the **Contractor's** option, if it otherwise conforms with the requirements of this Article 22.1.4.

22.1.5 Commercial Automobile Liability Insurance: The **Contractor** shall provide Commercial Automobile Liability Insurance for liability arising out of ownership,

maintenance or use of any owned (if any), non-owned and hired vehicles to be used in connection with this **Contract**. Coverage shall be at least as broad as the latest edition of ISO Form CA0001. If vehicles are used for transporting hazardous materials, the Automobile Liability Insurance shall be endorsed to provide pollution liability broadened coverage for covered vehicles (endorsement CA 99 48) as well as proof of MCS 90.

22.1.6 Contractors Pollution Liability Insurance: If specified in Schedule A of the General Conditions, the **Contractor** shall maintain, or cause the **Subcontractor** doing such **Work** to maintain, Contractors Pollution Liability Insurance covering bodily injury and property damage. Such insurance shall provide coverage for actual, alleged or threatened emission, discharge, dispersal, seepage, release or escape of pollutants (including asbestos), including any loss, cost or expense incurred as a result of any cleanup of pollutants (including asbestos) or in the investigation, settlement or defense of any claim, action, or proceedings arising from the operations under this **Contract**. Such insurance shall be in the **Contractor's** name and list the **City** as an Additional Insured and any other entity specified in Schedule A. Coverage shall include, without limitation, (a) loss of use of damaged property or of property that has not been physically injured, (b) transportation, and (c) non-owned disposal sites.

22.1.6(a) Coverage for the **City** as Additional Insured shall specifically include the **City's** officials and employees and be at least as broad as provided to the **Contractor** for this **Project**.

22.1.6(b) If such insurance is written on a claims-made policy, such policy shall have a retroactive date on or before the effective date of this **Contract**, and continuous coverage shall be maintained, or an extended discovery period exercised, for a period of not less than three (3) years from the time the **Work** under this **Contract** is completed.

22.1.7 Marine Insurance:

22.1.7(a) Marine Protection and Indemnity Insurance: If specified in Schedule A of the General Conditions or if the **Contractor** engages in marine operations in the execution of any part of the **Work**, the **Contractor** shall maintain, or cause the **Subcontractor** doing such Work to maintain, Marine Protection and Indemnity Insurance with coverage at least as broad as Form SP-23. The insurance shall provide coverage for the **Contractor** or **Subcontractor** (whichever is doing this **Work**) and for the **City** (together with its officials and employees) and any other entity specified in Schedule A as an Additional Insured for bodily injury and property damage arising from marine operations under this **Contract**. Coverage shall include, without limitation, injury or death of crew members (if not fully provided through other insurance), removal of wreck, damage to piers, wharves and other fixed or floating objects and loss of or damage to any other vessel or craft, or to property on such other vessel or craft.

22.1.7(b) Hull and Machinery Insurance: If specified in Schedule A of the General Conditions or if the **Contractor** engages in marine operations in the execution of any part of the **Work**, the **Contractor** shall maintain, or cause the **Subcontractor** doing such **Work** to maintain, Hull and Machinery Insurance with coverage for the **Contractor** or **Subcontractor** (whichever is doing this Work) and for the **City** (together with its officials and employees) as Additional Insured at least as broad as the latest edition of American Institute Tug Form for all tugs used under this

Contract and Collision Liability at least as broad as the latest edition of American Institute Hull Clauses.

22.1.7(c) Marine Pollution Liability Insurance: If specified in Schedule A of the General Conditions or if the **Contractor** engages in marine operations in the execution of any part of the **Work**, the **Contractor** shall maintain, or cause the **Subcontractor** doing such Work to maintain, Marine Pollution Liability Insurance covering itself (or the Subcontractor doing such Work) as Named Insured and the **City** (together with its officials and employees) and any other entity specified in Schedule A as an Additional Insured. Coverage shall be at least as broad as that provided by the latest edition of Water Quality Insurance Syndicate Form and include, without limitation, liability arising from the discharge or substantial threat of a discharge of oil, or from the release or threatened release of a hazardous substance including injury to, or economic losses resulting from, the destruction of or damage to real property, personal property or natural resources.

22.1.8 The **Contractor** shall provide such other types of insurance, at such minimum limits and with such conditions, as are specified in Schedule A of the General Conditions.

22.2 General Requirements for Insurance Coverage and Policies:

22.2.1 All required insurance policies shall be maintained with companies that may lawfully issue the required policy and have an A.M. Best rating of at least A-/VII or a Standard and Poor's rating of at least A, unless prior written approval is obtained from the **City** Corporation Counsel.

22.2.2 The **Contractor** shall be solely responsible for the payment of all premiums for all required policies and all deductibles and self-insured retentions to which such policies are subject, whether or not the **City** is an insured under the policy.

22.2.3 In his/her sole discretion, the **Commissioner** may, subject to the approval of the **Comptroller** and the **City** Corporation Counsel, accept Letters of Credit and/or custodial accounts in lieu of required insurance.

22.2.4 The **City's** limits of coverage for all types of insurance required pursuant to Schedule A of the General Conditions shall be the greater of (i) the minimum limits set forth in Schedule A or (ii) the limits provided to the **Contractor** as Named Insured under all primary, excess, and umbrella policies of that type of coverage.

22.2.5 The **Contractor** may satisfy its insurance obligations under this Article 22 through primary policies or a combination of primary and excess/umbrella policies, so long as all policies provide the scope of coverage required herein.

22.2.6 Policies of insurance provided pursuant to this Article 22 shall be primary and non-contributing to any insurance or self-insurance maintained by the **City**.

22.3 Proof of Insurance:

22.3.1 For all types of insurance required by Article 22.1 and Schedule A, except for insurance required by Articles 22.1.4 and 22.1.7, the **Contractor** shall file proof of insurance in accordance with this Article 22.3 within ten (10) **Days** of award. For insurance

provided pursuant to Articles 22.1.4 and 22.1.7, proof shall be filed by a date specified by the **Commissioner** or ten (10) **Days** prior to the commencement of the portion of the **Work** covered by such policy, whichever is earlier.

22.3.2 For Workers' Compensation Insurance provided pursuant to Article 22.1.2, the **Contractor** shall submit one of the following forms: C-105.2 Certificate of Workers' Compensation Insurance; U-26.3 - State Insurance Fund Certificate of Workers' Compensation Insurance; Request for WC/DB Exemption (Form CE-200); equivalent or successor forms used by the New York State Workers' Compensation Board; or other proof of insurance in a form acceptable to the **Commissioner**. For Disability Benefits Insurance provided pursuant to Article 22.1.2, the Contractor shall submit DB-120.1 - Certificate Of Insurance Coverage Under The NYS Disability Benefits Law, Request for WC/DB Exemption (Form CE-200); equivalent or successor forms used by the New York State Workers' Compensation Board; or other proof of insurance in a form acceptable to the **Commissioner**. ACORD forms are not acceptable.

22.3.3 For policies provided pursuant to all of Article 22.1 other than Article 22.1.2, the **Contractor** shall submit one or more Certificates of Insurance on forms acceptable to the **Commissioner**. All such Certificates of Insurance shall certify (a) the issuance and effectiveness of such policies of insurance, each with the specified minimum limits (b) for insurance secured pursuant to Article 22.1.1 that the **City** and any other entity specified in Schedule A is an Additional Insured thereunder; (c) in the event insurance is required pursuant to Article 22.1.6 and/or Article 22.1.7, that the City is an Additional Insured thereunder; (d) the company code issued to the insurance company by the National Association of Insurance Commissioners (the NAIC number); and (e) the number assigned to the **Contract** by the **City**. All such Certificates of Insurance shall be accompanied by either a duly executed "Certification by Insurance Broker or Agent" in the form contained in Part III of Schedule A or copies of all policies referenced in such Certificate of Insurance as certified by an authorized representative of the issuing insurance carrier. If any policy is not available at the time of submission, certified binders may be submitted until such time as the policy is available, at which time a certified copy of the policy shall be submitted.

22.3.4 Documentation confirming renewals of insurance shall be submitted to the **Commissione**r prior to the expiration date of coverage of policies required under this **Contract**. Such proofs of insurance shall comply with the requirements of Articles 22.3.2 and 22.3.3.

22.3.5 The **Contractor** shall be obligated to provide the **City** with a copy of any policy of insurance provided pursuant to this Article 22 upon the demand for such policy by the **Commissioner** or the **City** Corporation Counsel.

22.4 Operations of the **Contractor**:

22.4.1 The **Contractor** shall not commence the **Work** unless and until all required certificates have been submitted to and accepted by the **Commissioner**. Acceptance by the **Commissioner** of a certificate does not excuse the **Contractor** from securing insurance consistent with all provisions of this Article 22 or of any liability arising from its failure to do so.

22.4.2 The **Contractor** shall be responsible for providing continuous insurance coverage in the manner, form, and limits required by this **Contract** and shall be authorized to perform **Work** only during the effective period of all required coverage.

22.4.3 In the event that any of the required insurance policies lapse, are revoked, suspended or otherwise terminated, for whatever cause, the **Contractor** shall immediately stop all **Work**, and shall not recommence **Work** until authorized in writing to do so by the **Commissioner**. Upon quitting the **Site**, except as otherwise directed by the **Commissioner**, the **Contractor** shall leave all plant, materials, equipment, tools, and supplies on the **Site**. **Contract** time shall continue to run during such periods and no extensions of time will be granted. The **Commissioner** may also declare the **Contractor** in default for failure to maintain required insurance.

22.4.4 In the event the **Contractor** receives notice, from an insurance company or other person, that any insurance policy required under this Article 22 shall be cancelled or terminated (or has been cancelled or terminated) for any reason, the **Contractor** shall immediately forward a copy of such notice to both the **Commissioner** and the New York City Comptroller, attn: Office of Contract Administration, Municipal Building, One Centre Street, room 1005, New York, New York 10007. Notwithstanding the foregoing, the **Contractor** shall ensure that there is no interruption in any of the insurance coverage required under this Article 22.

22.4.5 Where notice of loss, damage, occurrence, accident, claim or suit is required under an insurance policy maintained in accordance with this Article 22, the **Contractor** shall notify in writing all insurance carriers that issued potentially responsive policies of any such event relating to any operations under this **Contract** (including notice to Commercial General Liability insurance carriers for events relating to the **Contractor**'s own employees) no later than 20 days after such event. For any policy where the **City** is an Additional Insured, such notice shall expressly specify that "this notice is being given on behalf of the City of New York as Insured as well as the Named Insured." Such notice shall also contain the following information: the number of the insurance policy, the name of the named insured, the date and location of the damage, occurrence, or accident, and the identity of the persons or things injured, damaged or lost. The **Contractor** shall simultaneously send a copy of such notice to the City of New York c/o Insurance Claims Specialist, Affirmative Litigation Division, New York City Law Department, 100 Church Street, New York, New York 10007.

22.4.6 In the event of any loss, accident, claim, action, or other event that does or can give rise to a claim under any insurance policy required under this Article 22, the **Contractor** shall at all times fully cooperate with the **City** with regard to such potential or actual claim.

22.5 **Subcontractor** Insurance: In the event the **Contractor** requires any **Subcontractor** to procure insurance with regard to any operations under this **Contract** and requires such **Subcontractor** to name the **Contractor** as an **Additional Insured** thereunder, the **Contractor** shall ensure that the **Subcontractor** name the **City**, including its officials and employees, as an Additional Insured with coverage at least as broad as the most recent edition of ISO Form CG 20 26.

22.6 Wherever reference is made in Article 7 or this Article 22 to documents to be sent to the **Commissioner** (e.g., notices, filings, or submissions), such documents shall be sent to the address set forth in Schedule A of the General Conditions. In the event no address is set forth in Schedule A, such documents are to be sent to the **Commissioner's** address as provided elsewhere in this **Contract**.

22.7 Apart from damages or losses covered by insurance provided pursuant to Articles 22.1.2, 22.1.3, or 22.1.5, the **Contractor** waives all rights against the **City**, including its officials and employees, for any damages or losses that are covered under any insurance required under this Article 22 (whether or

not such insurance is actually procured or claims are paid thereunder) or any other insurance applicable to the operations of the **Contractor** and/or its employees, agents, or **Subcontractors**.

22.8 In the event the **Contractor** utilizes a self-insurance program to satisfy any of the requirements of this Article 22, the **Contractor** shall ensure that any such self-insurance program provides the **City** with all rights that would be provided by traditional insurance under this Article 22, including but not limited to the defense and indemnification obligations that insurers are required to undertake in liability policies.

22.9 Materiality/Non-Waiver: The **Contractor's** failure to secure policies in complete conformity with this Article 22, or to give an insurance company timely notice of any sort required in this **Contract** or to do anything else required by this Article 22 shall constitute a material breach of this **Contract**. Such breach shall not be waived or otherwise excused by any action or inaction by the **City** at any time.

22.10 Pursuant to General Municipal Law Section 108, this **Contract** shall be void and of no effect unless **Contractor** maintains Workers' Compensation Insurance for the term of this **Contract** to the extent required and in compliance with the New York State Workers' Compensation Law.

22.11 Other Remedies: Insurance coverage provided pursuant to this Article 22 or otherwise shall not relieve the **Contractor** of any liability under this **Contract**, nor shall it preclude the **City** from exercising any rights or taking such other actions available to it under any other provisions of this **Contract** or **Law**.

ARTICLE 23. MONEY RETAINED AGAINST CLAIMS

23.1 If any claim shall be made by any person or entity (including **Other Contractors** with the **City** on this **Project**) against the **City** or against the **Contractor** and the **City** for any of the following:

(a) An alleged loss, damage, injury, theft or vandalism of any of the kinds referred to in Articles 7 and 12, plus the reasonable costs of defending the **City**, which in the opinion of the **Comptroller** may not be paid by an insurance company (for any reason whatsoever); or

(b) An infringement of copyrights, patents or use of patented articles, tools, etc., as referred to in Article 57; or

(c) Damage claimed to have been caused directly or indirectly by the failure of the **Contractor** to perform the **Work** in strict accordance with this **Contract,**

the amount of such claim, or so much thereof as the **Comptroller** may deem necessary, may be withheld by the **Comptroller**, as security against such claim, from any money due hereunder. The **Comptroller**, in his/her discretion, may permit the **Contractor** to substitute other satisfactory security in lieu of the monies so withheld.

23.2 If an action on such claim is timely commenced and the liability of the **City**, or the **Contractor**, or both, shall have been established therein by a final judgment of a court of competent jurisdiction, or if such claim shall have been admitted by the **Contractor** to be valid, the **Comptroller** shall pay such judgment or admitted claim out of the monies retained by the **Comptroller** under the provisions of this Article 23, and return the balance, if any, without interest, to the **Contractor**.

ARTICLE 24. MAINTENANCE AND GUARANTY

24.1 The **Contractor** shall promptly repair, replace, restore or rebuild, as the **Commissioner** may determine, any finished **Work** in which defects of materials or workmanship may appear or to which damage may occur because of such defects, during the one (1) year period subsequent to the date of **Substantial Completion** (or use and occupancy in accordance with Article 16), except where other periods of maintenance and guaranty are provided for in Schedule A.

24.2 As security for the faithful performance of its obligations hereunder, the **Contractor**, upon filing its requisition for payment on **Substantial Completion**, shall deposit with the **Commissioner** a sum equal to one (1%) percent of the price (or the amount fixed in Schedule A of the General Conditions) in cash or certified check upon a state or national bank and trust company or a check of such bank and trust company signed by a duly authorized officer thereof and drawn to the order of the **Comptroller**, or obligations of the **City**, which the **Comptroller** may approve as of equal value with the sum so required.

24.3 In lieu of the above, the **Contractor** may make such security payment to the **City** by authorizing the **Commissioner** in writing to deduct the amount from the **Substantial Completion** payment which shall be deemed the deposit required above.

24.4 If the **Contractor** has faithfully performed all of its obligations hereunder the **Commissioner** shall so certify to the **Comptroller** within five (5) **Days** after the expiration of one (1) year from the date of **Substantial Completion** and acceptance of the **Work** or within thirty (30) **Days** after the expiration of the guarantee period fixed in the **Specifications**. The security payment shall be repaid to the **Contractor** without interest within thirty (30) **Days** after certification by the **Commissioner** to the **Comptroller** that the **Contractor** has faithfully performed all of its obligations hereunder.

24.5 Notice by the **Commissioner** to the **Contractor** to repair, replace, rebuild or restore such defective or damaged **Work** shall be timely, pursuant to this article, if given not later than ten (10) **Days** subsequent to the expiration of the one (1) year period or other periods provided for herein.

24.6 If the **Contractor** shall fail to repair, replace, rebuild or restore such defective or damaged **Work** promptly after receiving such notice, the **Commissioner** shall have the right to have the **Work** done by others in the same manner as provided for in the completion of a defaulted **Contract**, under Article 51.

24.7 If the security payment so deposited is insufficient to cover the cost of such **Work**, the **Contractor** shall be liable to pay such deficiency on demand by the **Commissioner**.

24.8 The **Engineer's** certificate setting forth the fair and reasonable cost of repairing, replacing, rebuilding or restoring any damaged or defective **Work** when performed by one other than the **Contractor**, shall be binding and conclusive upon the **Contractor** as to the amount thereof.

24.9 The **Contractor** shall obtain all manufacturers' warranties and guaranties of all equipment and materials required by this **Contract** in the name of the **City** and shall deliver same to the **Commissioner**. All of the **City's** rights and title and interest in and to said manufacturers' warranties and guaranties may be assigned by the **City** to any subsequent purchasers of such equipment and materials or lessees of the premises into which the equipment and materials have been installed.

CHAPTER VI: CHANGES, EXTRA WORK, AND DOCUMENTATION OF CLAIM

ARTICLE 25. CHANGES

25.1 Changes may be made to this **Contract** only as duly authorized in writing by the **Commissioner** in accordance with the **Law** and this **Contract**. All such changes, modifications, and amendments will become a part of the **Contract**. **Work** so ordered shall be performed by the **Contractor**.

25.2 **Contract** changes will be made only for **Work** necessary to complete the **Work** included in the original scope of the **Contract** and/or for non-material changes to the scope of the **Contract**. Changes are not permitted for any material alteration in the scope of **Work** in the **Contract**.

25.3 The **Contractor** shall be entitled to a price adjustment for **Extra Work** performed pursuant to a written change order. Adjustments to price shall be computed in one or more of the following ways:

25.3.1 By applicable unit prices specified in the **Contract**; and/or

25.3.2 By agreement of a fixed price; and/or

25.3.3 By time and material records; and/or

25.3.4 In any other manner approved by the **CCPO**.

25.4 All payments for change orders are subject to pre-audit by the **Engineering Audit Officer** and may be post-audited by the **Comptroller** and/or the **Agency**.

ARTICLE 26. METHODS OF PAYMENT FOR OVERRUNS AND EXTRA WORK

26.1 Overrun of Unit Price Item: An overrun is any quantity of a unit price item which the **Contractor** is directed to provide which is in excess of one hundred twenty-five (125%) percent of the estimated quantity for that item set forth in the bid schedule.

26.1.1For any unit price item, the **Contractor** will be paid at the unit price bid for any quantity up to one hundred twenty-five (125%) percent of the estimated quantity for that item set forth in the bid schedule. If during the progress of the **Work**, the actual quantity of any unit price item required to complete the **Work** approaches the estimated quantity for that item, and for any reason it appears that the actual quantity of any unit price item necessary to complete the **Work** will exceed the estimated quantity for that item by twenty-five (25%) percent, the **Contractor** shall immediately notify the **Engineer** of such anticipated overrun. The **Contractor** shall not be compensated for any quantity of a unit price item provided which is in excess of one hundred twenty-five (125%) percent of the estimated quantity for that item set forth in the bid schedule without written authorization from the **Engineer**.

26.1.2 If the actual quantity of any unit price item necessary to complete the **Work** will exceed one hundred twenty five (125%) percent of the estimated quantity for that item set forth in the bid schedule, the **City** reserves the right and the **Contractor** agrees to negotiate a new unit price for such item. In no event shall such negotiated new unit price exceed the unit bid price. If the **City** and **Contractor** cannot agree on a new unit price, then the **City** shall order the **Contractor** and the **Contractor** agrees to provide additional quantities of

the item on the basis of time and material records for the actual and reasonable cost as determined under Article 26.2, but in no event at a unit price exceeding the unit price bid.

26.2 **Extra Work:** For **Extra Work** where payment is by agreement on a fixed price in accordance with Article 25.3.2, the price to be paid for such **Extra Work** shall be based on the fair and reasonable estimated cost of the items set forth below. For **Extra Work** where payment is based on time and material records in accordance with Article 25.3.3, the price to be paid for such **Extra Work** shall be the actual and reasonable cost of the items set forth below, calculated in accordance with the formula specified therein, if any.

26.2.1 Necessary materials (including transportation to the **Site**); plus

26.2.2 Necessary direct labor, including payroll taxes (subject to statutory wage caps) and supplemental benefits; plus

26.2.3 Sales and personal property taxes, if any, required to be paid on materials not incorporated into such **Extra Work**; plus

26.2.4 Reasonable rental value of **Contractor-**owned (or **Subcontractor-**owned, as applicable), necessary plant and equipment other than **Small Tools**, plus fuel/energy costs. Except for fuel costs for pick-up trucks which shall be reimbursed based on a consumption of five (5) gallons per shift, fuel costs shall be reimbursed based on actual costs or, in the absence of auditable documentation, the following fuel consumption formula per operating hour: (.035) x (HP rating) x (Fuel cost/gallon). Reasonable rental value is defined as the lower of either seventy-five percent of the monthly prorated rental rates established in "The AED Green Book, Rental Rates and Specifications for Construction Equipment" published by Equipment Watch (the "Green Book"), or seventy-five percent of the monthly prorated rental rates established in the "Rental Rate Blue Book for Construction Equipment" published by Equipment Watch (the "Blue Book") (the applicable Blue Book rate being for rental only without the addition of any operational costs listed in the Blue Book). The reasonable rental value is deemed to be inclusive of all operating costs except for fuel/energy consumption and equipment operator's wages/costs. For multiple shift utilization, reimbursement shall be calculated as follows: first shift shall be seventy-five (75%) percent of such rental rates; second shift shall be sixty (60%) percent of the first shift rate; and third shift shall be forty (40%) percent of the first shift rate. Equipment on standby shall be reimbursed at one-third (1/3) the prorated monthly rental rate. **Contractor-**owned (or **Subcontractor**-owned, as applicable) equipment includes equipment from rental companies affiliated with or controlled by the **Contractor** (or **Subcontractor**, as applicable)**,** as determined by the **Commissioner**. In establishing cost reimbursement for non-operating **Contractor**-owned (or **Subcontractor-**owned, as applicable) equipment (scaffolding, sheeting systems, road plates, etc.), the **City** may restrict reimbursement to a purchase-salvage/life cycle basis if less than the computed rental costs; plus

26.2.5 Necessary installation and dismantling of such plant and equipment, including transportation to and from the **Site**, if any, provided that, in the case of non-**Contractor**-owned (or non-**Subcontractor**-owned, as applicable) equipment rented from a third party, the cost of installation and dismantling are not allowable if such costs are included in the rental rate; plus

26.2.6 Necessary fees charged by governmental entities; plus

26.2.7 Necessary construction-related service fees charged by non-governmental entities, such as landfill tipping fees; plus

26.2.8 Reasonable rental costs of non-**Contractor**-owned (or non-**Subcontractor**-owned, as applicable) necessary plant and equipment other than **Small Tools**, plus fuel/energy costs. Except for fuel costs for pick-up trucks which shall be reimbursed based on a consumption of five (5) gallons per shift, fuel costs shall be reimbursed based on actual costs or, in the absence of auditable documentation, the following fuel consumption formula per hour of operation: (.035) x (HP rating) x (Fuel cost/gallon). In lieu of renting, the **City** reserves the right to direct the purchase of non-operating equipment (scaffolding, sheeting systems, road plates, etc.), with payment on a purchase-salvage/life cycle basis, if less than the projected rental costs; plus

26.2.9 Workers' Compensation Insurance, and any insurance coverage expressly required by the **City** for the performance of the **Extra Work** which is different than the types of insurance required by Article 22 and Schedule A of the General Conditions. The cost of Workers' Compensation Insurance is subject to applicable payroll limitation caps and shall be based upon the carrier's Manual Rate for such insurance derived from the applicable class Loss Cost ("LC") and carrier's Lost Cost Multiplier ("LCM") approved by the New York State Department of Financial Services, and with the exception of experience rating, rate modifiers as promulgated by the New York Compensation Insurance Rating Board ("NYCIRB"); plus

26.2.10 Additional costs incurred as a result of the **Extra Work** for performance and payment bonds; plus

26.2.11 Twelve percent (12%) percent of the total of items in Articles 26.2.1 through 26.2.5 as compensation for overhead, except that no percentage for overhead will be allowed on **Payroll Taxes** or on the premium portion of overtime pay or on sales and personal property taxes. Overhead shall include without limitation, all costs and expenses in connection with administration, management superintendence, small tools, and insurance required by Schedule A of the General Conditions other than Workers' Compensation Insurance; plus

26.2.12 Ten (10%) percent of the total of items in Articles 26.2.1 through 26.2.5, plus the items in Article 26.2.11, as compensation for profit, except that no percentage for profit will be allowed on **Payroll Taxes** or on the premium portion of overtime pay or on sales and personal property taxes; plus

26.2.13 Five (5%) percent of the total of items in Articles 26.2.6 through 26.2.10 as compensation for overhead and profit.

26.3 Where the **Extra Work** is performed in whole or in part by other than the **Contractor's** own forces pursuant to Article 26.2, the **Contractor** shall be paid, subject to pre-audit by the **Engineering Audit Officer**, the cost of such **Work** computed in accordance with Article 26.2 above, plus an additional allowance of five (5%) percent to cover the **Contractor's** overhead and profit.

26.4 Where a change is ordered, involving both **Extra Work** and omitted or reduced **Contract Work,** the **Contract** price shall be adjusted, subject to pre-audit by the **EAO**, in an amount based on the difference between the cost of such **Extra Work** and of the omitted or reduced **Work**.

26.5 Where the **Contractor** and the **Commissioner** can agree upon a fixed price for **Extra Work** in accordance with Article 25.3.2 or another method of payment for **Extra Work** in accordance with

Article 25.3.4, or for **Extra Work** ordered in connection with omitted **Work**, such method, subject to pre-audit by the **EAO**, may, at the option of the **Commissioner**, be substituted for the cost plus a percentage method provided in Article 26.2; provided, however, that if the **Extra Work** is performed by a **Subcontractor**, the **Contractor** shall not be entitled to receive more than an additional allowance of five (5%) percent for overhead and profit over the cost of such **Subcontractor's Work** as computed in accordance with Article 26.2.

ARTICLE 27. RESOLUTION OF DISPUTES

27.1 All disputes between the **City** and the **Contractor** of the kind delineated in this Article 27.1 that arise under, or by virtue of, this **Contract** shall be finally resolved in accordance with the provisions of this Article 27 and the **PPB** Rules. This procedure for resolving all disputes of the kind delineated herein shall be the exclusive means of resolving any such disputes.

27.1.1 This Article 27 shall not apply to disputes concerning matters dealt with in other sections of the **PPB** Rules, or to disputes involving patents, copyrights, trademarks, or trade secrets (as interpreted by the courts of New York State) relating to proprietary rights in computer software.

27.1.2 This Article 27 shall apply only to disputes about the scope of **Work** delineated by the **Contract**, the interpretation of **Contract** documents, the amount to be paid for **Extra Work** or disputed work performed in connection with the **Contract**, the conformity of the **Contractor's Work** to the **Contract**, and the acceptability and quality of the **Contractor's Work**; such disputes arise when the **Engineer**, **Resident Engineer**, **Engineering Audit Officer**, or other designee of the **Commissioner** makes a determination with which the **Contractor** disagrees.

27.2 All determinations required by this Article 27 shall be made in writing clearly stated, with a reasoned explanation for the determination based on the information and evidence presented to the party making the determination. Failure to make such determination within the time required by this Article 27 shall be deemed a non-determination without prejudice that will allow application to the next level.

27.3 During such time as any dispute is being presented, heard, and considered pursuant to this Article 27, the **Contract** terms shall remain in force and the **Contractor** shall continue to perform **Work** as directed by the **ACCO** or the **Engineer**. Failure of the **Contractor** to continue **Work** as directed shall constitute a waiver by the **Contractor** of its claim.

27.4 Presentation of Disputes to **Commissioner**.

Notice of Dispute and Agency Response. The **Contractor** shall present its dispute in writing ("Notice of Dispute") to the **Commissioner** within thirty (30) Days of receiving written notice of the determination or action that is the subject of the dispute. This notice requirement shall not be read to replace any other notice requirements contained in the **Contract**. The Notice of Dispute shall include all the facts, evidence, documents, or other basis upon which the **Contractor** relies in support of its position, as well as a detailed computation demonstrating how any amount of money claimed by the **Contractor** in the dispute was arrived at. Within thirty (30) Days after receipt of the detailed written submission comprising the complete Notice of Dispute, the **Engineer**, **Resident Engineer**, **Engineering Audit Officer**, or other designee of the **Commissioner** shall submit to the **Commissioner** all materials he or she deems pertinent to the dispute. Following initial submissions to the **Commissioner**, either party may demand of the other the production of any document or other material the demanding party believes may be relevant to the dispute. The requested party shall produce all relevant materials that are not otherwise

protected by a legal privilege recognized by the courts of New York State. Any question of relevancy shall be determined by the **Commissioner** whose decision shall be final. Willful failure of the **Contractor** to produce any requested material whose relevancy the **Contractor** has not disputed, or whose relevancy has been affirmatively determined, shall constitute a waiver by the **Contractor** of its claim.

27.4.1 **Commissioner** Inquiry. The **Commissioner** shall examine the material and may, in his or her discretion, convene an informal conference with the **Contractor**, the **ACCO**, and the **Engineer**, **Resident Engineer**, **Engineering Audit Officer**, or other designee of the **Commissioner** to resolve the issue by mutual consent prior to reaching a determination. The **Commissioner** may seek such technical or other expertise as he or she shall deem appropriate, including the use of neutral mediators, and require any such additional material from either or both parties as he or she deems fit. The **Commissioner's** ability to render, and the effect of, a decision hereunder shall not be impaired by any negotiations in connection with the dispute presented, whether or not the **Commissioner** participated therein. The **Commissioner** may or, at the request of any party to the dispute, shall compel the participation of any **Other Contractor** with a contract related to the **Work** of this **Contract**, and that **Contractor** shall be bound by the decision of the **Commissioner**. Any **Other Contractor** thus brought into the dispute resolution proceeding shall have the same rights and obligations under this Article 27 as the **Contractor** initiating the dispute.

27.4.2 **Commissioner** Determination. Within thirty (30) **Days** after the receipt of all materials and information, or such longer time as may be agreed to by the parties, the **Commissioner** shall make his or her determination and shall deliver or send a copy of such determination to the **Contractor**, the **ACCO,** and **Engineer**, **Resident Engineer**, **Engineering Audit Officer**, or other designee of the **Commissioner**, as applicable, together with a statement concerning how the decision may be appealed.

27.4.3 Finality of **Commissioner's** Decision. The **Commissioner's** decision shall be final and binding on all parties, unless presented to the Contract Dispute Resolution Board pursuant to this Article 27. The **City** may not take a petition to the Contract Dispute Resolution Board. However, should the **Contractor** take such a petition, the **City** may seek, and the Contract Dispute Resolution Board may render, a determination less favorable to the **Contractor** and more favorable to the **City** than the decision of the **Commissioner**.

27.5 Presentation of Dispute to the **Comptroller**. Before any dispute may be brought by the **Contractor** to the Contract Dispute Resolution Board, the **Contractor** must first present its claim to the **Comptroller** for his or her review, investigation, and possible adjustment.

27.5.1 Time, Form, and Content of Notice. Within thirty (30) **Days** of its receipt of a decision by the **Commissioner,** the **Contractor** shall submit to the **Comptroller** and to the **Commissioner** a Notice of Claim regarding its dispute with the **Agency**. The Notice of Claim shall consist of (i) a brief written statement of the substance of the dispute, the amount of money, if any, claimed and the reason(s) the **Contractor** contends the dispute was wrongly decided by the **Commissioner**; (ii) a copy of the written decision of the **Commissioner**; and (iii) a copy of all materials submitted by the **Contractor** to the **Agency**, including the Notice of Dispute. The **Contractor** may not present to the **Comptroller** any material not presented to the **Commissioner**, except at the request of the **Comptroller**.

27.5.2 Response. Within thirty (30) **Days** of receipt of the Notice of Claim, the **Agency** shall make available to the **Comptroller** a copy of all material submitted by the **Agency** to the **Commissioner** in connection with the dispute. The **Agency** may not present to the **Comptroller** any material not presented to the **Commissioner** except at the request of the **Comptroller**.

27.5.3 **Comptroller** Investigation. The **Comptroller** may investigate the claim in dispute and, in the course of such investigation, may exercise all powers provided in Sections 7-201 and 7-203 of the Administrative Code. In addition, the **Comptroller** may demand of either party, and such party shall provide, whatever additional material the **Comptroller** deems pertinent to the claim, including original business records of the **Contractor**. Willful failure of the **Contractor** to produce within fifteen (15) **Days** any material requested by the **Comptroller** shall constitute a waiver by the **Contractor** of its claim. The **Comptroller** may also schedule an informal conference to be attended by the **Contractor**, **Agency** representatives, and any other personnel desired by the **Comptroller**.

27.5.4 Opportunity of **Comptroller** to Compromise or Adjust Claim. The **Comptroller** shall have forty-five (45) **Days** from his or her receipt of all materials referred to in Article 27.5.3 to investigate the disputed claim. The period for investigation and compromise may be further extended by agreement between the **Contractor** and the **Comptroller**, to a maximum of ninety (90) **Days** from the **Comptroller's** receipt of all materials. The **Contractor** may not present its petition to the Contract Dispute Resolution Board until the period for investigation and compromise delineated in this Article 27.5.4 has expired. In compromising or adjusting any claim hereunder, the **Comptroller** may not revise or disregard the terms of the **Contract** between the parties.

27.6 Contract Dispute Resolution Board. There shall be a Contract Dispute Resolution Board composed of:

27.6.1 The chief administrative law judge of the Office of Administrative Trials and Hearings (OATH) or his/her designated OATH administrative law judge, who shall act as chairperson, and may adopt operational procedures and issue such orders consistent with this Article 27 as may be necessary in the execution of the Contract Dispute Resolution Board's functions, including, but not limited to, granting extensions of time to present or respond to submissions;

27.6.2 The **CCPO** or his/her designee; any designee shall have the requisite background to consider and resolve the merits of the dispute and shall not have participated personally and substantially in the particular matter that is the subject of the dispute or report to anyone who so participated; and

27.6.3 A person with appropriate expertise who is not an employee of the **City**. This person shall be selected by the presiding administrative law judge from a prequalified panel of individuals, established and administered by OATH with appropriate background to act as decision-makers in a dispute. Such individual may not have a contract or dispute with the **City** or be an officer or employee of any company or organization that does, or regularly represents persons, companies, or organizations having disputes with the **City**.

27.7 Petition to the Contract Dispute Resolution Board. In the event the claim has not been settled or adjusted by the **Comptroller** within the period provided in this Article 27, the **Contractor**,

within thirty (30) **Days** thereafter, may petition the Contract Dispute Resolution Board to review the **Commissioner's** determination.

27.7.1 Form and Content of Petition by **Contractor**. The **Contractor** shall present its dispute to the Contract Dispute Resolution Board in the form of a petition, which shall include (i) a brief written statement of the substance of the dispute, the amount of money, if any, claimed, and the reason(s) the **Contractor** contends the dispute was wrongly decided by the **Commissioner**; (ii) a copy of the written Decision of the **Commissioner,** (iii) copies of all materials submitted by the **Contractor** to the Agency; (iv) a copy of the written decision of the **Comptroller**, if any, and (v) copies of all correspondence with, or written material submitted by the **Contractor**, to the **Comptroller**. The **Contractor** shall concurrently submit four (4) complete sets of the Petition: one set to the **City** Corporation Counsel (Attn: Commercial and Real Estate Litigation Division) and three (3) sets to the Contract Dispute Resolution Board at OATH's offices with proof of service on the **City** Corporation Counsel. In addition, the **Contractor** shall submit a copy of the written statement of the substance of the dispute, cited in (i) above, to both the **Commissioner** and the **Comptroller**.

27.7.2 **Agency** Response. Within thirty (30) **Days** of its receipt of the Petition by the **City** Corporation Counsel, the **Agency** shall respond to the brief written statement of the **Contractor** and make available to the Contract Dispute Resolution Board all material it submitted to the **Commissioner** and **Comptroller**. Three (3) complete copies of the **Agency** response shall be provided to the Contract Dispute Resolution Board and one to the **Contractor**. Extensions of time for submittal of the **Agency** response shall be given as necessary upon a showing of good cause or, upon consent of the parties, for an initial period of up to thirty (30) Days.

27.7.3 Further Proceedings. The Contract Dispute Resolution Board shall permit the **Contractor** to present its case by submission of memoranda, briefs, and oral argument. The Contract Dispute Resolution Board shall also permit the **Agency** to present its case in response to the **Contractor** by submission of memoranda, briefs, and oral argument. If requested by the **City** Corporation Counsel, the **Comptroller** shall provide reasonable assistance in the preparation of the **Agency's** case. Neither the **Contractor** nor the **Agency** may support its case with any documentation or other material that was not considered by the **Comptroller**, unless requested by the Contract Dispute Resolution Board. The Contract Dispute Resolution Board, in its discretion, may seek such technical or other expert advice as it shall deem appropriate and may seek, on its own or upon application of a party, any such additional material from any party as it deems fit. The Contract Dispute Resolution Board, in its discretion, may combine more than one dispute between the parties for concurrent resolution.

27.7.4 Contract Dispute Resolution Board Determination. Within forty-five (45) **Days** of the conclusion of all written submissions and oral arguments, the Contract Dispute Resolution Board shall render a written decision resolving the dispute. In an unusually complex case, the Contract Dispute Resolution Board may render its decision in a longer period, not to exceed ninety (90) **Days**, and shall so advise the parties at the commencement of this period. The Contract Dispute Resolution Board's decision must be consistent with the terms of the **Contract**. Decisions of the Contract Dispute Resolution Board shall only resolve matters before the Contract Dispute Resolution Board and shall not have precedential effect with respect to matters not before the Contract Dispute Resolution Board.

27.7.5 Notification of Contract Dispute Resolution Board Decision. The Contract Dispute Resolution Board shall send a copy of its decision to the **Contractor**, the **ACCO**, the Engineer, the **Comptroller**, the **City** Corporation Counsel, the CCPO, and the **PPB**. A decision in favor of the **Contractor** shall be subject to the prompt payment provisions of the **PPB** Rules. The Required Payment Date shall be thirty (30) Days after the date the parties are formally notified of the Contract Dispute Resolution Board's decision.

27.7.6 Finality of Contract Dispute Resolution Board Decision. The Contract Dispute Resolution Board's decision shall be final and binding on all parties. Any party may seek review of the Contract Dispute Resolution Board's decision solely in the form of a challenge, filed within four (4) months of the date of the Contract Dispute Resolution Board's decision, in a court of competent jurisdiction of the State of New York, County of New York pursuant to Article 78 of the Civil Practice Law and Rules. Such review by the court shall be limited to the question of whether or not the Contract Dispute Resolution Board's decision was made in violation of lawful procedure, was affected by an error of **Law**, or was arbitrary and capricious or an abuse of discretion. No evidence or information shall be introduced or relied upon in such proceeding that was not presented to the Contract Dispute Resolution Board in accordance with this Article 27.

27.8 Any termination, cancellation, or alleged breach of the **Contract** prior to or during the pendency of any proceedings pursuant to this Article 27 shall not affect or impair the ability of the **Commissioner** or Contract Dispute Resolution Board to make a binding and final decision pursuant to this Article 27.

ARTICLE 28. RECORD KEEPING FOR EXTRA OR DISPUTED WORK OR WORK ON A TIME & MATERIALS BASIS

28.1 While the **Contractor** or any of its **Subcontractors** is performing **Work** on a time and material basis or **Extra Work** on a time and material basis ordered by the **Commissioner** under Article 25, or where the **Contractor** believes that it or any of its **Subcontractors** is performing **Extra Work** but a final determination by **Agency** has not been made, or the **Contractor** or any of its **Subcontractors** is performing disputed **Work** (whether on or off the **Site**), or complying with a determination or order under protest in accordance with Articles 11, 27, and 30, in each such case the **Contractor** shall furnish the **Resident Engineer** daily with three (3) copies of written statements signed by the **Contractor's** representative at the **Site** showing:

28.1.1 The name, trade, and number of each worker employed on such **Work** or engaged in complying with such determination or order, the number of hours employed, and the character of the **Work** each is doing; and

28.1.2 The nature and quantity of any materials, plant and equipment furnished or used in connection with the performance of such **Work** or compliance with such determination or order, and from whom purchased or rented.

28.2 A copy of such statement will be countersigned by the **Resident Engineer**, noting thereon any items not agreed to or questioned, and will be returned to the **Contractor** within two (2) **Days** after submission.

28.3 The **Contractor** and its **Subcontractors**, when required by the **Commissioner**, or the **Comptroller**, shall also produce for inspection, at the office of the **Contractor** or **Subcontractor**, any and all of its books, bid documents, financial statements, vouchers, records, daily job diaries and reports,

and cancelled checks, and any other documents relating to showing the nature and quantity of the labor, materials, plant and equipment actually used in the performance of such **Work**, or in complying with such determination or order, and the amounts expended therefor, and shall permit the **Commissioner** and the **Comptroller** to make such extracts therefrom, or copies thereof, as they or either of them may desire.

28.4 In connection with the examination provided for herein, the **Commissioner**, upon demand therefor, will produce for inspection by the **Contractor** such records as the **Agency** may have with respect to such **Extra Work** or disputed **Work** performed under protest pursuant to order of the **Commissioner**, except those records and reports which may have been prepared for the purpose of determining the accuracy and validity of the **Contractor's** claim.

28.5 Failure to comply strictly with these requirements shall constitute a waiver of any claim for extra compensation or damages on account of the performance of such **Work** or compliance with such determination or order.

ARTICLE 29. OMITTED WORK

29.1 If any **Contract Work** in a lump sum **Contract**, or if any part of a lump sum item in a unit price, lump sum, or percentage-bid **Contract** is omitted by the **Commissioner** pursuant to Article 33, the **Contract** price, subject to audit by the EAO, shall be reduced by a pro rata portion of the lump sum bid amount based upon the percent of **Work** omitted subject to Article 29.4. For the purpose of determining the pro rata portion of the lump sum bid amount, the bid breakdown submitted in accordance with Article 41 shall be considered, but shall not be the determining factor.

29.2 If the whole of a lump sum item or units of any other item is so omitted by the **Commissioner** in a unit price, lump sum, or percentage-bid **Contract**, then no payment will be made therefor except as provided in Article 29.4.

29.3 For units that have been ordered but are only partially completed, the unit price shall be reduced by a pro rata portion of the unit price bid based upon the percentage of **Work** omitted subject to Article 29.4.

29.4 In the event the **Contractor**, with respect to any omitted **Work**, has purchased any non-cancelable material and/or equipment that is not capable of use except in the performance of this **Contract** and has been specifically fabricated for the sole purpose of this **Contract**, but not yet incorporated into the **Work**, the **Contractor** shall be paid for such material and/or equipment in accordance with Article 64.2.1(b); provided, however, such payment is contingent upon the **Contractor's** delivery of such material and/or equipment in acceptable condition to a location designated by the **City**.

29.5 The **Contractor** agrees to make no claim for damages or for loss of overhead and profit with regard to any omitted **Work**.

ARTICLE 30. NOTICE AND DOCUMENTATION OF COSTS AND DAMAGES; PRODUCTION OF FINANCIAL RECORDS

30.1 If the **Contractor** shall claim to be sustaining damages by reason of any act or omission of the **City** or its agents, it shall submit to the **Commissioner** within forty-five (45) **Days** from the time such damages are first incurred, and every thirty (30) **Days** thereafter to the extent additional damages are being incurred for the same condition, verified statements of the details and the amounts of such

damages, together with documentary evidence of such damages. The **Contractor** may submit any of the above statements within such additional time as may be granted by the **Commissioner** in writing upon written request therefor. Failure of the **Commissioner** to respond in writing to a written request for additional time within thirty (30) **Days** shall be deemed a denial of the request. On failure of the **Contractor** to strictly comply with the foregoing provisions, such claims shall be deemed waived and no right to recover on such claims shall exist. Damages that the **Contractor** may claim in any action or dispute resolution procedure arising under or by reason of this **Contract** shall not be different from or in excess of the statements and documentation made pursuant to this Article 30. This Article 30.1 does not apply to claims submitted to the **Commissioner** pursuant to Article 11 or to claims disputing a determination under Article 27.

30.2 In addition to the foregoing statements, the **Contractor** shall, upon notice from the **Commissioner**, produce for examination at the **Contractor's** office, by the **Engineer**, **Architect** or **Project Manager**, all of its books of account, bills, invoices, payrolls, subcontracts, time books, daily reports, bank deposit books, bank statements, check books, and cancelled checks, showing all of its acts and transactions in connection with or relating to or arising by reason of this **Contract**, and submit itself and persons in its employment, for examination under oath by any person designated by the **Commissioner** or **Comptroller** to investigate claims made or disputes against the **City** under this **Contract**. At such examination, a duly authorized representative of the **Contractor** may be present.

30.3 In addition to the statements required under Article 28 and this Article 30, the **Contractor** and/or its **Subcontractor** shall, within thirty (30) **Days** upon notice from the **Commissioner** or **Comptroller**, produce for examination at the **Contractor's** and/or **Subcontractor's** office, by a representative of either the **Commissioner** or **Comptroller**, all of its books of account, bid documents, financial statements, accountant workpapers, bills, invoices, payrolls, subcontracts, time books, daily reports, bank deposit books, bank statements, check books, and cancelled checks, showing all of its acts and transactions in connection with or relating to or arising by reason of this **Contract**. Further, the **Contractor** and/or its **Subcontractor** shall submit any person in its employment, for examination under oath by any person designated by the **Commissioner** or **Comptroller** to investigate claims made or disputes against the **City** under this **Contract**. At such examination, a duly authorized representative of the **Contractor** may be present.

30.4 Unless the information and examination required under Article 30.3 is provided by the **Contractor** and/or its **Subcontractor** upon thirty (30) **Days'** notice from the **Commissioner** or **Comptroller**, or upon the **Commissioner's** or **Comptroller's** written authorization to extend the time to comply, the **City** shall be released from all claims arising under, relating to or by reason of this **Contract**, except for sums certified by the **Commissioner** to be due under the provisions of this **Contract**. It is further stipulated and agreed that no person has the power to waive any of the foregoing provisions and that in any action or dispute resolution procedure against the **City** to recover any sum in excess of the sums certified by the **Commissioner** to be due under or by reason of this **Contract**, the **Contractor** must allege in its complaint and prove, at trial or during such dispute resolution procedure, compliance with the provisions of this Article 30.

30.5 In addition, after the commencement of any action or dispute resolution procedure by the **Contractor** arising under or by reason of this **Contract**, the **City** shall have the right to require the **Contractor** to produce for examination under oath, up until the trial of the action or hearing before the Contract Dispute Resolution Board, the books and documents described in Article 30.3 and submit itself and all persons in its employ for examination under oath. If this Article 30 is not complied with as required, then the **Contractor** hereby consents to the dismissal of the action or dispute resolution procedure.

CHAPTER VII: POWERS OF THE RESIDENT ENGINEER,THE ENGINEER OR ARCHITECT AND THE COMMISSIONER

ARTICLE 31. THE RESIDENT ENGINEER

31.1 The **Resident Engineer** shall have the power to inspect, supervise, and control the performance of the **Work**, subject to review by the **Commissioner**. The **Resident Engineer** shall not, however, have the power to issue an **Extra Work** order, except as specifically designated in writing by the **Commissioner**.

ARTICLE 32. THE ENGINEER OR ARCHITECT OR PROJECT MANAGER

32.1 The **Engineer** or **Architect** or **Project Manager**, in addition to those matters elsewhere herein delegated to the **Engineer** and expressly made subject to his/her determination, direction or approval, shall have the power, subject to review by the **Commissioner**:

32.1.1 To determine the amount, quality, and location of the **Work** to be paid for hereunder; and

32.1.2 To determine all questions in relation to the **Work**, to interpret the **Contract Drawings**, **Specifications**, and **Addenda**, and to resolve all patent inconsistencies or ambiguities therein; and

32.1.3 To determine how the **Work** of this **Contract** shall be coordinated with **Work** of **Other Contractors** engaged simultaneously on this **Project**, including the power to suspend any part of the **Work**, but not the whole thereof; and

32.1.4 To make minor changes in the **Work** as he/she deems necessary, provided such changes do not result in a net change in the cost to the **City** or to the **Contractor** of the **Work** to be done under the **Contract**; and

32.1.5 To amplify the **Contract Drawings**, add explanatory information and furnish additional **Specifications** and drawings, consistent with this **Contract**.

32.2 The foregoing enumeration shall not imply any limitation upon the power of the **Engineer** or **Architect** or **Project Manager**, for it is the intent of this **Contract** that all of the **Work** shall generally be subject to his/her determination, direction, and approval, except where the determination, direction or approval of someone other than the **Engineer** or **Architect** or **Project Manager** is expressly called for herein.

32.3 The **Engineer** or **Architect** or **Project Manager** shall not, however, have the power to issue an **Extra Work** order, except as specifically designated in writing by the **Commissioner**.

ARTICLE 33. THE COMMISSIONER

33.1 The **Commissioner**, in addition to those matters elsewhere herein expressly made subject to his/her determination, direction or approval, shall have the power:

33.1.1 To review and make determinations on any and all questions in relation to this **Contract** and its performance; and

33.1.2 To modify or change this **Contract** so as to require the performance of **Extra Work** (subject, however, to the limitations specified in Article 25) or the omission of **Contract Work**; and

33.1.3 To suspend the whole or any part of the **Work** whenever in his/her judgment such suspension is required:

33.1.3(a) In the interest of the **City** generally; or

33.1.3(b) To coordinate the **Work** of the various contractors engaged on this **Project** pursuant to the provisions of Article 12; or

33.1.3(c) To expedite the completion of the entire **Project** even though the completion of this particular **Contract** may thereby be delayed.

ARTICLE 34. NO ESTOPPEL

34.1 Neither the **City** nor any **Agency**, official, agent or employee thereof, shall be bound, precluded or estopped by any determination, decision, approval, order, letter, payment or certificate made or given under or in connection with this **Contract** by the **City**, the **Commissioner**, the **Engineer**, the **Resident Engineer**, or any other official, agent or employee of the **City**, either before or after the final completion and acceptance of the **Work** and payment therefor:

34.1.1 From showing the true and correct classification, amount, quality or character of the **Work** actually done; or that any such determination, decision, order, letter, payment or certificate was untrue, incorrect or improperly made in any particular, or that the **Work**, or any part thereof, does not in fact conform to the requirements of this **Contract**; and

34.1.2 From demanding and recovering from the **Contractor** any overpayment made to it, or such damages as the **City** may sustain by reason of the **Contractor's** failure to perform each and every part of its **Contract**.

CHAPTER VIII: LABOR PROVISIONS

ARTICLE 35. EMPLOYEES

35.1 The **Contractor** and its **Subcontractors** shall not employ on the **Work**:

35.1.1 Anyone who is not competent, faithful and skilled in the **Work** for which he/she shall be employed; and whenever the **Commissioner** shall inform the **Contractor**, in writing, that any employee is, in his/her opinion, incompetent, unfaithful or disobedient, that employee shall be discharged from the **Work** forthwith, and shall not again be employed upon it; or

35.1.2 Any labor, materials or means whose employment, or utilization during the course of this **Contract**, may tend to or in any way cause or result in strikes, work stoppages, delays, suspension of **Work** or similar troubles by workers employed by the **Contractor** or its **Subcontractors**, or by any of the trades working in or about the buildings and premises where **Work** is being performed under this **Contract**, or by **Other Contractors** or their **Subcontractors** pursuant to other contracts, or on any other building or premises owned or operated by the **City**, its **Agencies**, departments, boards or authorities. Any violation by the **Contractor** of this requirement may, upon certification of the **Commissioner**, be considered as proper and sufficient cause for declaring the **Contractor** to be in default, and for the **City** to take action against it as set forth in Chapter X of this **Contract**, or such other article of this **Contract** as the Commissioner may deem proper; or

35.1.3 In accordance with Section 220.3-e of the Labor Law of the State of New York (hereinafter "Labor Law"), the **Contractor** and its **Subcontractors** shall not employ on the **Work** any apprentice, unless he/she is a registered individual, under a bona fide program registered with the New York State Department of Labor. The allowable ratio of apprentices to journey-level workers in any craft classification shall not be greater than the ratio permitted to the **Contractor** as to its work force on any job under the registered program. Any employee listed on a payroll at an apprentice wage rate, who is not registered as above, shall be paid the wage rate determined by the **Comptroller** of the **City** for the classification of **Work** actually performed. The **Contractor** or **Subcontractor** will be required to furnish written evidence of the registration of its program and apprentices as well as all the appropriate ratios and wage rates, for the area of the construction prior to using any apprentices on the **Contract Work**.

35.2 If the total cost of the **Work** under this **Contract** is at least two hundred fifty thousand ($250,000) dollars, all laborers, workers, and mechanics employed in the performance of the C**ontract** on the public work site, either by the **Contractor**, **Subcontractor** or other person doing or contracting to do the whole or a part of the **Work** contemplated by the **Contract**, shall be certified prior to performing any **Work** as having successfully completed a course in construction safety and health approved by the United States Department of Labor's Occupational Safety and Health Administration that is at least ten (10) hours in duration.

35.3 In accordance with Local Law Nos. 30-2012 and 33-2012, codified at sections 6-132 and 12-113 of the Administrative Code, respectively,

35.3.1 The **Contractor** shall not take an adverse personnel action with respect to an officer or employee in retaliation for such officer or employee making a report of information concerning conduct which such officer or employee knows or reasonably believes to involve corruption, criminal activity, conflict of interest, gross mismanagement or abuse of authority by any officer or employee relating to this **Contract** to (a) the Commissioner of the Department of Investigation, (b) a member of the New York City Council, the Public Advocate, or the **Comptroller**, or (c) the **CCPO**, **ACCO**, **Agency** head, or **Commissioner**.

35.3.2 If any of the **Contractor**'s officers or employees believes that he or she has been the subject of an adverse personnel action in violation of Article 35.3.1, he or she shall be entitled to bring a cause of action against the **Contractor** to recover all relief necessary to make him or her whole. Such relief may include but is not limited to: (a) an injunction to restrain continued retaliation, (b) reinstatement to the position such employee would have had but for the retaliation or to an equivalent position, (c) reinstatement of full fringe benefits and seniority rights, (d) payment of two times back

pay, plus interest, and (e) compensation for any special damages sustained as a result of the retaliation, including litigation costs and reasonable attorney's fees.

35.3.3 The **Contractor** shall post a notice provided by the **City** in a prominent and accessible place on any site where work pursuant to the **Contract** is performed that contains information about:

35.3.3(a) how its employees can report to the New York City Department of Investigation allegations of fraud, false claims, criminality or corruption arising out of or in connection with the **Contract**; and

35.3.3(b) the rights and remedies afforded to its employees under Administrative Code sections 7-805 (the New York City False Claims Act) and 12-113 (the Whistleblower Protection Expansion Act) for lawful acts taken in connection with the reporting of allegations of fraud, false claims, criminality or corruption in connection with the **Contract**.

35.3.4 For the purposes of this Article 35.3, "adverse personnel action" includes dismissal, demotion, suspension, disciplinary action, negative performance evaluation, any action resulting in loss of staff, office space, equipment or other benefit, failure to appoint, failure to promote, or any transfer or assignment or failure to transfer or assign against the wishes of the affected officer or employee.

35.3.5 This Article 35.3 is applicable to all of the **Contractor**'s **Subcontractors** having subcontracts with a value in excess of $100,000; accordingly, the **Contractor** shall include this rider in all subcontracts with a value a value in excess of $100,000.

35.4 Article 35.3 is not applicable to this **Contract** if it is valued at $100,000 or less. Articles 35.3.1, 35.3.2, 35.3.4, and 35.3.5 are not applicable to this **Contract** if it was solicited pursuant to a finding of an emergency.

35.5 Paid Sick Leave Law.

35.5.1 Introduction and General Provisions.

35.5.1(a) The Earned Sick Time Act, also known as the Paid Sick Leave Law ("PSLL"), requires covered employees who annually perform more than 80 hours of work in New York City to be provided with paid sick time.[2] Contractors of the **City** or of other governmental entities may be required to provide sick time pursuant to the PSLL.

35.5.1(b) The PSLL became effective on April 1, 2014, and is codified at Title 20, Chapter 8, of the New York City Administrative Code. It is administered by the City's Department of Consumer Affairs ("DCA"); DCA's rules promulgated under the PSLL are codified at Chapter 7 of Title 6 of the Rules of the City of New York ("Rules").

[2] Pursuant to the PSLL, if fewer than five employees work for the same employer, as determined pursuant to New York City Administrative Code § 20-912(g), such employer has the option of providing such employees uncompensated sick time.

35.5.1(c) The **Contractor** agrees to comply in all respects with the PSLL and the Rules, and as amended, if applicable, in the performance of this **Contract**. The **Contractor** further acknowledges that such compliance is a material term of this **Contract** and that failure to comply with the PSLL in performance of this **Contract** may result in its termination.

35.5.1(d) The **Contractor** must notify the **Agency Chief Contracting Officer** of the **Agency** with whom it is contracting in writing within ten (10) days of receipt of a complaint (whether oral or written) regarding the PSLL involving the performance of this **Contract**. Additionally, the **Contractor** must cooperate with DCA's education efforts and must comply with DCA's subpoenas and other document demands as set forth in the PSLL and Rules.

35.5.1(e) The PSLL is summarized below for the convenience of the **Contractor**. The **Contractor** is advised to review the PSLL and Rules in their entirety. On the website www.nyc.gov/PaidSickLeave there are links to the PSLL and the associated Rules as well as additional resources for employers, such as Frequently Asked Questions, timekeeping tools and model forms, and an event calendar of upcoming presentations and webinars at which the **Contractor** can get more information about how to comply with the PSLL. The **Contractor** acknowledges that it is responsible for compliance with the PSLL notwithstanding any inconsistent language contained herein.

35.5.2 Pursuant to the PSLL and the Rules: Applicability, Accrual, and Use.

35.5.2(a) An employee who works within the City of New York for more than eighty hours in any consecutive 12-month period designated by the employer as its "calendar year" pursuant to the PSLL ("Year") must be provided sick time. Employers must provide a minimum of one hour of sick time for every 30 hours worked by an employee and compensation for such sick time must be provided at the greater of the employee's regular hourly rate or the minimum wage. Employers are not required to provide more than 40 hours of sick time to an employee in any Year.

35.5.2(b) An employee has the right to determine how much sick time he or she will use, provided that employers may set a reasonable minimum increment for the use of sick time not to exceed four hours per **Day**. In addition, an employee may carry over up to 40 hours of unused sick time to the following Year, provided that no employer is required to allow the use of more than forty hours of sick time in a Year or carry over unused paid sick time if the employee is paid for such unused sick time and the employer provides the employee with at least the legally required amount of paid sick time for such employee for the immediately subsequent Year on the first **Day** of such Year.

35.5.2(c) An employee entitled to sick time pursuant to the PSLL may use sick time for any of the following:

i. such employee's mental illness, physical illness, injury, or health condition or the care of such illness, injury, or condition or such employee's need for medical diagnosis or preventive medical care;
ii. such employee's care of a family member (an employee's child, spouse, domestic partner, parent, sibling, grandchild or grandparent, or the child or parent of an employee's spouse or domestic partner) who has a mental

illness, physical illness, injury or health condition or who has a need for medical diagnosis or preventive medical care;

iii. closure of such employee's place of business by order of a public official due to a public health emergency; or

iv. such employee's need to care for a child whose school or childcare provider has been closed due to a public health emergency.

35.5.2(d) An employer must not require an employee, as a condition of taking sick time, to search for a replacement. However, an employer may require an employee to provide: reasonable notice of the need to use sick time; reasonable documentation that the use of sick time was needed for a reason above if for an absence of more than three consecutive work days; and/or written confirmation that an employee used sick time pursuant to the PSLL. However, an employer may not require documentation specifying the nature of a medical condition or otherwise require disclosure of the details of a medical condition as a condition of providing sick time and health information obtained solely due to an employee's use of sick time pursuant to the PSLL must be treated by the employer as confidential.

35.5.2(e) If an employer chooses to impose any permissible discretionary requirement as a condition of using sick time, it must provide to all employees a written policy containing those requirements, using a delivery method that reasonably ensures that employees receive the policy. If such employer has not provided its written policy, it may not deny sick time to an employee because of non-compliance with such a policy.

35.5.2(f) Sick time to which an employee is entitled must be paid no later than the payday for the next regular payroll period beginning after the sick time was used.

35.5.3 Exemptions and Exceptions. Notwithstanding the above, the PSLL does not apply to any of the following:

35.5.3(a) an independent contractor who does not meet the definition of employee under section 190(2) of the New York State Labor Law;

35.5.3(b) an employee covered by a valid collective bargaining agreement in effect on April 1, 2014, until the termination of such agreement;

35.5.3(c) an employee in the construction or grocery industry covered by a valid collective bargaining agreement if the provisions of the PSLL are expressly waived in such collective bargaining agreement;

35.5.3(d) an employee covered by another valid collective bargaining agreement if such provisions are expressly waived in such agreement and such agreement provides a benefit comparable to that provided by the PSLL for such employee;

35.5.3(e) an audiologist, occupational therapist, physical therapist, or speech language pathologist who is licensed by the New York State Department of Education and who calls in for work assignments at will, determines his or her own schedule, has the ability to reject or accept any assignment referred to him or her, and is paid an average hourly wage that is at least four times the federal minimum wage;

35.5.3(f) an employee in a work study program under Section 2753 of Chapter 42 of the United States Code;

35.5.3(g) an employee whose work is compensated by a qualified scholarship program as that term is defined in the Internal Revenue Code, Section 117 of Chapter 20 of the United States Code; or

35.5.3(h) a participant in a Work Experience Program (WEP) under section 336-c of the New York State Social Services Law.

35.5.4 Retaliation Prohibited. An employer may not threaten or engage in retaliation against an employee for exercising or attempting in good faith to exercise any right provided by the PSLL. In addition, an employer may not interfere with any investigation, proceeding, or hearing pursuant to the PSLL.

35.5.5 Notice of Rights.

35.5.5(a) An employer must provide its employees with written notice of their rights pursuant to the PSLL. Such notice must be in English and the primary language spoken by an employee, provided that DCA has made available a translation into such language. Downloadable notices are available on DCA's website at http://www.nyc.gov/html/dca/html/law/PaidSickLeave.shtml.

35.5.5(b) Any person or entity that willfully violates these notice requirements is subject to a civil penalty in an amount not to exceed fifty dollars for each employee who was not given appropriate notice.

35.5.6 Records. An employer must retain records documenting its compliance with the PSLL for a period of at least three years, and must allow DCA to access such records in furtherance of an investigation related to an alleged violation of the PSLL.

35.5.7 Enforcement and Penalties.

35.5.7(a) Upon receiving a complaint alleging a violation of the PSLL, DCA has the right to investigate such complaint and attempt to resolve it through mediation. Within 30 **Days** of written notification of a complaint by DCA, or sooner in certain circumstances, the employer must provide DCA with a written response and such other information as DCA may request. If DCA believes that a violation of the PSLL has occurred, it has the right to issue a notice of violation to the employer.

35.5.7(b) DCA has the power to grant an employee or former employee all appropriate relief as set forth in New York City Administrative Code § 20-924(d). Such relief may include, among other remedies, treble damages for the wages that should have been paid, damages for unlawful retaliation, and damages and reinstatement for unlawful discharge. In addition, DCA may impose on an employer found to have violated the PSLL civil penalties not to exceed $500 for a first violation, $750 for a second violation within two years of the first violation, and $1,000 for each succeeding violation within two years of the previous violation.

35.5.8 More Generous Polices and Other Legal Requirements. Nothing in the PSLL is intended to discourage, prohibit, diminish, or impair the adoption or retention of a more generous sick time policy, or the obligation of an employer to comply with any contract,

collective bargaining agreement, employment benefit plan or other agreement providing more generous sick time. The PSLL provides minimum requirements pertaining to sick time and does not preempt, limit or otherwise affect the applicability of any other law, regulation, rule, requirement, policy or standard that provides for greater accrual or use by employees of sick leave or time, whether paid or unpaid, or that extends other protections to employees. The PSLL may not be construed as creating or imposing any requirement in conflict with any federal or state law, rule or regulation.

35.6 HireNYC: Hiring and Reporting Requirements. This Article 35.6 applies to construction contracts of $1,000,000 or more. The **Contractor** shall comply with the requirements of Articles 35.6.1-35.6.5 for all non-trades jobs (e.g., for an administrative position arising out of **Work** ant located in New York City). The **Contractor** shall reasonably cooperate with SBS and the **City** on specific outreach events, including "Hire-on-the-Spot" events, for the hiring of trades workers in connection with the **Work**. If provided elsewhere in this **Contract**, this **Contract** is subject to a project labor agreement.

35.6.1 Enrollment. The **Contractor** shall enroll with the HireNYC system, found at www.nyc.gov/sbs, within thirty (30) days after the registration of this **Contract** pursuant to Section 328 of the New York City Charter. The **Contractor** shall provide information about the business, designate a primary contact and say whether it intends to hire for any entry to mid-level job opportunities arising from this **Contract** and located in New York City, and, if so, the approximate start date of the first hire.

35.6.2 Job Posting Requirements.

35.6.2(a) Once enrolled in HireNYC, the **Contractor** agrees to update the HireNYC portal with all entry to mid-level job opportunities arising from this **Contract** and located in New York City, if any, which shall be defined as jobs requiring no more than an associate degree, as provided by the New York State Department of Labor (see Column F of https://labor.ny.gov/stats/2012-2022- NYS-Employment-Prospects.xls). The information to be updated includes the types of entry and mid-level positions made available from the work arising from the **Contract** and located in New York City, the number of positions, the anticipated schedule of initiating the hiring process for these positions, and the contact information for the **Contractor's** representative charged with overseeing hiring. The **Contractor** must update the HireNYC portal with any hiring needs arising from the contract and located in New York City, and the requirements of the jobs to be filled, no less than three weeks prior to the intended first day of employment for each new position, except with the permission of SBS, not to be unreasonably withheld, and must also update the HireNYC portal as set forth below.

35.6.2(b) After enrollment through HireNYC and submission of relevant information, SBS will work with the **Contractor** to develop a recruitment plan which will outline the candidate screening process, and will provide clear instructions as to when, where, and how interviews will take place. HireNYC will screen applicants based on employer requirements and refer applicants whom it believes are qualified to the **Contractor** for interviews. The **Contractor** must interview referred applicants whom it believes are qualified.

35.6.2(c) After completing an interview of a candidate referred by HireNYC, the **Contractor** must provide feedback via the portal within twenty (20) business days to indicate which candidates were interviewed and hired, if any. In addition, the **Contractor** shall provide the start date of new hires, and additional information

reasonably related to such hires, within twenty (20) business days after the start date. In the event the **Contractor** does not have any job openings covered by this Rider in any given year, the **Contractor** shall be required to provide an annual update to HireNYC to that effect. For this purpose, the reporting year shall run from the date of the registration of the **Contract** pursuant to Charter section 328 and each anniversary date.

35.6.2(d) These requirements do not limit the **Contractor's** ability to assess the qualifications of prospective workers, and to make final hiring and retention decisions. No provision of this Article 35.6 shall be interpreted so as to require the **Contractor** to employ any particular worker.

35.6.2(e) In addition, the provisions of this Article 35.6 shall not apply to positions that the **Contractor** intends to fill with employees employed pursuant to the job retention provision of Section 22-505 of the Administrative Code of the City of New York. The **Contractor** shall not be required to report such openings with HireNYC. However, the **Contractor** shall enroll with the HireNYC system pursuant to Article 35.6.1, above, and, if such positions subsequently become open, then the remaining provisions of this Article 35.6 will apply.

35.6.3 Breach and Liquidated Damages. If the **Contractor** fails to comply with the terms of the **ContrSact** and this Article 35.6 (l) by not enrolling its business with HireNYC; (2) by not informing HireNYC, as required, of open positions; or (3) by failing to interview a qualified candidate, the **Agency** may assess liquidated damages in the amount of two-thousand five hundred dollars ($2,500) per breach. For all other events of noncompliance with the terms of this Article 35.6, the **Agency** may assess liquidated damages in the amount of five hundred dollars ($500) per breach. Furthermore, in the event the **Contractor** breaches the requirements of this Article 35.6 during the term of the **Contract**, the **City** may hold the **Contractor** in default of this **Contract**.

35.6.4 Audit Compliance. In addition to the auditing requirements set forth in other parts of the **Contract**, the **Contractor** shall permit SBS and the **City** to inspect any and all records concerning or relating to job openings or the hiring of individuals for work arising from the **Contract** and located in New York City. The **Contractor** shall permit an inspection within seven (7) business days of the request.

35.6.5 Other Reporting Requirements. The **Contractor** shall report to the **City**, on a monthly basis, all information reasonably requested by the **City** that is necessary for the **City** to comply with any reporting requirements imposed by **Law**, including any requirement that the **City** maintain a publicly accessible database. In addition, the **Contractor** agrees to comply with all reporting requirements imposed by **Law**, or as otherwise requested by the **City**.

35.6.6 Federal Hiring Requirements. If this **Contract** is federally funded (as indicated elsewhere in this Contract), the **Contractor** shall comply with all federal hiring requirements as may be set forth in this **Contract**, including, as applicable: (a) Section 3 of the HUD Act of 1968, which requires, to the greatest extent feasible, economic opportunities for 30 percent of new hires be given to low- and very low-income persons, particularly persons who are recipients of HUD assistance for housing and Executive Order 11246, which prohibits discrimination in employment due to race, color, religion, sex or national origin, and requires the implementation of goals for minority and female participation for work involving any construction trade.

ARTICLE 36. NO DISCRIMINATION

36.1 The **Contractor** specifically agrees, as required by Labor Law Section 220-e, as amended, that:

36.1.1 In the hiring of employees for the performance of **Work** under this **Contract** or any subcontract hereunder, neither the **Contractor**, **Subcontractor**, nor any person acting on behalf of such **Contractor** or **Subcontractor**, shall by reason of race, creed, color or national origin discriminate against any citizen of the State of New York who is qualified and available to perform the **Work** to which the employment relates;

36.1.2 Neither the **Contractor**, **Subcontractor**, nor any person on its behalf shall, in any manner, discriminate against or intimidate any employee hired for the performance of **Work** under this **Contract** on account of race, creed, color or national origin;

36.1.3 There may be deducted from the amount payable to the **Contractor** by the **City** under this **Contract** a penalty of fifty ($50.00) dollars for each person for each **Day** during which such person was discriminated against or intimidated in violation of the provisions of this **Contract**; and

36.1.4 This **Contract** may be cancelled or terminated by the **City** and all moneys due or to become due hereunder may be forfeited, for a second or any subsequent violation of the terms or conditions of this Article 36.

36.1.5 This Article 36 covers all construction, alteration and repair of any public building or public work occurring in the State of New York and the manufacture, sale, and distribution of materials, equipment, and supplies to the extent that such operations are performed within the State of New York pursuant to this **Contract**.

36.2 The **Contractor** specifically agrees, as required by Section 6-108 of the Administrative Code, as amended, that:

36.2.1 It shall be unlawful for any person engaged in the construction, alteration or repair of buildings or engaged in the construction or repair of streets or highways pursuant to a **Contract** with the **City** or engaged in the manufacture, sale or distribution of materials, equipment or supplies pursuant to a **Contract** with the **City** to refuse to employ or to refuse to continue in any employment any person on account of the race, color or creed of such person.

36.2.2 It shall be unlawful for any person or any servant, agent or employee of any person, described in Article 36.1.2, to ask, indicate or transmit, orally or in writing, directly or indirectly, the race, color or creed or religious affiliation of any person employed or seeking employment from such person, firm or corporation.

36.2.3 Breach of the foregoing provisions shall be deemed a violation of a material provision of this **Contract**.

36.2.4 Any person, or the employee, manager or owner of or officer of such firm or corporation who shall violate any of the provisions of this Article 36.2 shall, upon

conviction thereof, be punished by a fine of not more than one hundred ($100.00) dollars or by imprisonment for not more than thirty (30) **Days**, or both.

36.3 This **Contract** is subject to the requirements of Executive Order No. 50 (1980) ("E.O. 50"), as revised, and the rules and regulations promulgated thereunder. No contract will be awarded unless and until these requirements have been complied with in their entirety. By signing this **Contract**, the **Contractor** agrees that it:

36.3.1 Will not engage in any unlawful discrimination against any employee or applicant for employment because of race, creed, color, national origin, sex, age, disability, marital status or sexual orientation with respect to all employment decisions including, but not limited to, recruitment, hiring, upgrading, demotion, downgrading, transfer, training, rates of pay or other forms of compensation, layoff, termination, and all other terms and conditions of employment; and

36.3.2 Will not engage in any unlawful discrimination in the selection of **Subcontractors** on the basis of the owner's race, color, creed, national origin, sex, age, disability, marital status or sexual orientation; and

36.3.3 Will state in all solicitations or advertisements for employees placed by or on behalf of the **Contractor** that all qualified applicants will receive consideration for employment without unlawful discrimination based on race, creed, color, national origin, sex, age, citizens status, disability, marital status, sexual orientation, or that it is an equal employment opportunity employer; and

36.3.4 Will send to each labor organization or representative of workers with which it has a collective bargaining agreement or other contract or memorandum of understanding, written notification of its equal employment opportunity commitments under E.O. 50 and the rules and regulations promulgated thereunder; and

36.3.5 Will furnish, before the award of the **Contract**, all information and reports, including an employment report, that are required by E.O. 50, the rules and regulations promulgated thereunder, and orders of the **City** Department of Business Services, Division of Labor Services (**DLS**) and will permit access to its books, records, and accounts by the **DLS** for the purposes of investigation to ascertain compliance with such rules, regulations, and orders.

36.4 The **Contractor** understands that in the event of its noncompliance with the nondiscrimination clauses of this **Contract** or with any of such rules, regulations, or orders, such noncompliance shall constitute a material breach of this **Contract** and noncompliance with E.O. 50 and the rules and regulations promulgated thereunder. After a hearing held pursuant to the rules of the **DLS**, the Director of the **DLS** may direct the **Commissioner** to impose any or all of the following sanctions:

36.4.1 Disapproval of the **Contractor**; and/or

36.4.2 Suspension or termination of the **Contract**; and/or

36.4.3 Declaring the **Contractor** in default; and/or

36.4.4 In lieu of any of the foregoing sanctions, the Director of the **DLS** may impose an employment program.

In addition to any actions taken under this **Contract**, failure to comply with E.O. 50 and the rules and regulations promulgated thereunder, in one or more instances, may result in a **City Agency** declaring the **Contractor** to be non-responsible in future procurements. The **Contractor** further agrees that it will refrain from entering into any **Contract** or **Contract** modification subject to E.O. 50 and the rules and regulations promulgated thereunder with a **Subcontractor** who is not in compliance with the requirements of E.O. 50 and the rules and regulations promulgated thereunder.

36.5 The **Contractor** specifically agrees, as required by Section 6-123 of the Administrative Code, that:

36.5.1 The **Contractor** will not engage in any unlawful discriminatory practice in violation of Title 8 of the Administrative Code; and

36.5.2 Any failure to comply with this Article 36.5 may subject the **Contractor** to the remedies set forth in Section 6-123 of the Administrative Code, including, where appropriate, sanctions such as withholding of payment, imposition of an employment program, finding the **Contractor** to be in default, cancellation of the **Contract**, or any other sanction or remedy provided by **Law** or **Contract**.

ARTICLE 37. LABOR LAW REQUIREMENTS

37.1 The **Contractor** shall strictly comply with all applicable provisions of the Labor Law, as amended. Such compliance is a material term of this **Contract**.

37.2 The **Contractor** specifically agrees, as required by Labor Law Sections 220 and 220-d, as amended, that:

37.2.1 Hours of **Work**: No laborer, worker, or mechanic in the employ of the **Contractor**, **Subcontractor** or other person doing or contracting to do the whole or a part of the **Work** contemplated by this **Contract** shall be permitted or required to work more than eight (8) hours in any one (1) **Day**, or more than five (5) **Days** in any one (1) week, except as provided in the Labor Law and in cases of extraordinary emergency including fire, flood, or danger to life or property, or in the case of national emergency when so proclaimed by the President of the United States of America.

37.2.2 In situations in which there are not sufficient laborers, workers, and mechanics who may be employed to carry on expeditiously the **Work** contemplated by this **Contract** as a result of such restrictions upon the number of hours and **Days** of labor, and the immediate commencement or prosecution or completion without undue delay of the **Work** is necessary for the preservation of the **Site** and/or for the protection of the life and limb of the persons using the same, such laborers, workers, and mechanics shall be permitted or required to work more than eight (8) hours in any one (1) **Day**; or five (5) **Days** in any one (1) week; provided, however, that upon application of any **Contractor**, the **Commissioner** shall have first certified to the Commissioner of Labor of the State of New York (hereinafter "Commissioner of Labor") that such public **Work** is of an important nature and that a delay in carrying it to completion would result in serious disadvantage to the public; and provided, further, that such Commissioner of Labor shall have determined that such an emergency does in fact exist as provided in Labor Law Section 220.2.

37.2.3 Failure of the **Commissioner** to make such a certification to the Commissioner of Labor shall not entitle the **Contractor** to damages for delay or for any cause whatsoever.

37.2.4 Prevailing Rate of Wages: The wages to be paid for a legal day's **Work** to laborers, workers, or mechanics employed upon the **Work** contemplated by this **Contract** or upon any materials to be used thereon shall not be less than the "prevailing rate of wage" as defined in Labor Law Section 220, and as fixed by the **Comptroller** in the attached Schedule of Wage Rates and in updated schedules thereof. The prevailing wage rates and supplemental benefits to be paid are those in effect at the time the **Work** is being performed.

37.2.5 Requests for interpretation or correction in the Information for Bidders includes all requests for clarification of the classification of trades to be employed in the performance of the **Work** under this **Contract**. In the event that a trade not listed in the **Contract** is in fact employed during the performance of this **Contract**, the **Contractor** shall be required to obtain from the **Agency** the prevailing wage rates and supplementary benefits for the trades used and to complete the performance of this **Contract** at the price at which the **Contract** was awarded.

37.2.6 Minimum Wages: Except for employees whose wage is required to be fixed pursuant to Labor Law Section 220, all persons employed by the **Contractor** and any **Subcontractor** in the manufacture or furnishing of the supplies, materials, or equipment, or the furnishing of work, labor, or services, used in the performance of this **Contract**, shall be paid, without subsequent deduction or rebate unless expressly authorized by **Law**, not less than the sum mandated by **Law**.

37.3 Working Conditions: No part of the **Work**, labor or services shall be performed or rendered by the **Contractor** in any plants, factories, buildings or surroundings or under working conditions which are unsanitary or hazardous or dangerous to the health and safety of employees engaged in the performance of this **Contract**. Compliance with the safety, sanitary, and factory inspection **Laws** of the state in which the **Work** is to be performed shall be prima facie evidence of compliance with this Article 37.3.

37.4 Prevailing Wage Enforcement: The **Contractor** agrees to pay for all costs incurred by the **City** in enforcing prevailing wage requirements, including the cost of any investigation conducted by or on behalf of the **Agency** or the **Comptroller,** where the **City** discovers a failure to comply with any of the requirements of this Article 37 by the **Contractor** or its **Subcontractor(s)**. The **Contractor** also agrees that, should it fail or refuse to pay for any such investigation, the **Agency** is hereby authorized to deduct from a **Contractor's** account an amount equal to the cost of such investigation.

37.4.1 The Labor Law Section 220 and Section 220-d, as amended, provide that this **Contract** shall be forfeited and no sum paid for any **Work** done hereunder on a second conviction for willfully paying less than:

37.4.1(a) The stipulated prevailing wage scale as provided in Labor Law section 220, as amended, or

37.4.1(b) The stipulated minimum hourly wage scale as provided in Labor Law section 220-d, as amended.

37.4.2 For any breach or violation of either working conditions (Article 37.3) or minimum wages (Article 37.2.6) provisions, the party responsible therefor shall be liable to the **City** for liquidated damages, which may be withheld from any amounts due on any contracts with the **City** of such party responsible, or may be recovered in actions brought by the **City**

Corporation Counsel in the name of the **City**, in addition to damages for any other breach of this **Contract**, for a sum equal to the amount of any underpayment of wages due to any employee engaged in the performance of this **Contract**. In addition, the **Commissioner** shall have the right to cancel contracts and enter into other contracts for the completion of the original contract, with or without public letting, and the original **Contractor** shall be liable for any additional cost. All sums withheld or recovered as deductions, rebates, refunds, or underpayment of wages hereunder, shall be held in a special deposit account and shall be paid without interest, on order of the **Comptroller**, directly to the employees who have been paid less than minimum rates of pay as set forth herein and on whose account such sums were withheld or recovered, provided that no claims by employees for such payments shall be entertained unless made within two (2) years from the date of actual notice to the **Contractor** of the withholding or recovery of such sums by the **City**.

37.4.3 A determination by the **Comptroller** that a **Contractor** and/or its **Subcontractor** willfully violated Labor Law Section 220 will be forwarded to the **City's** five District Attorneys for review.

37.4.4 The **Contractor's** or **Subcontractor's** noncompliance with this Article 37.4 and Labor Law Section 220 may result in an unsatisfactory performance evaluation and the **Comptroller** may also find and determine that the **Contractor** or **Subcontractor** willfully violated the New York Labor **Law**.

37.4.4(a) An unsatisfactory performance evaluation for noncompliance with this Article 37.4 may result in a determination that the **Contractor** is a non-responsible bidder on subsequent procurements with the **City** and thus a rejection of a future award of a contract with the **City**, as well as any other sanctions provided for by **Law**.

37.4.4(b) Labor Law Section 220-b, as amended, provides that when two (2) final determinations have been rendered against a **Contractor** or **Subcontractor** within any consecutive six (6) year period determining that such **Contractor** or **Subcontractor** has willfully failed to pay the prevailing rate of wages or to provide supplements in accordance with the Labor Law and this Article 37.4, whether such failures were concurrent or consecutive and whether or not such final determinations concerning separate public works projects are rendered simultaneously, such **Contractor** or **Subcontractor** shall be ineligible to submit a bid on or be awarded any public works contract with the **City** for a period of five (5) years from the second final determination. If the final determination involves the falsification of payroll records or the kickback of wages or supplements, the **Contractor** or **Subcontractor** shall be ineligible to submit a bid on or be awarded any public works contract with the **City** for a period of five (5) years from the first final determination.

37.4.4(c) Labor Law Section 220, as amended, provides that the **Contractor** or **Subcontractor** found to have violated this Article 37.4 may be directed to make payment of wages or supplements including interest found to be due, and the **Contractor** or **Subcontractor** may be directed to make payment of a further sum as a civil penalty in an amount not exceeding twenty-five (25%) percent of the total amount found to be due.

37.5 The **Contractor** and its **Subcontractors** shall within ten (10) **Days** after mailing of a Notice of Award or written order, post in prominent and conspicuous places in each and every plant, factory, building, and structure where employees of the **Contractor** and its **Subcontractors** engaged in the

performance of this **Contract** are employed, notices furnished by the **City**, in relation to prevailing wages and supplements, minimum wages, and other stipulations contained in Sections 220 and 220-h of the Labor Law, and the **Contractor** and its **Subcontractors** shall continue to keep such notices posted in such prominent and conspicuous places until **Final Acceptance** of the supplies, materials, equipment, or **Work**, labor, or services required to be furnished or rendered under this **Contract**.

37.6 The **Contractor** shall strictly comply with all of the provisions of Articles 37.6.1 through 37.6.5, and provide for all workers, laborers or mechanics in its employ, the following:

37.6.1 Notices Posted At **Site**: Post, in a location designated by the **City**, schedules of prevailing wages and supplements for this **Project**, a copy of all re-determinations of such schedules for the **Project**, the Workers' Compensation **Law** Section 51 notice, all other notices required by **Law** to be posted at the **Site**, the **City** notice that this **Project** is a public works project on which each worker is entitled to receive the prevailing wages and supplements for the occupation at which he or she is working, and all other notices which the **City** directs the **Contractor** to post. The **Contractor** shall provide a surface for such notices which is satisfactory to the **City**. The **Contractor** shall maintain and keep current such notices in a legible manner and shall replace any notice or schedule which is damaged, defaced, illegible or removed for any reason. The **Contractor** shall post such notices before commencing any **Work** on the **Site** and shall maintain such notices until all **Work** on the **Site** is complete; and

37.6.2 Daily **Site** Sign-in Sheets: Maintain daily **Site** sign-in sheets, and require that **Subcontractors** maintain daily **Site** sign-in sheets for its employees, which include blank spaces for an employee's name to be both printed and signed, job title, date started and Social Security number, the time the employee began work and the time the employee left work, until **Final Acceptance** of the supplies, materials, equipment, or **Work**, labor, or services to be furnished or rendered under this **Contract** unless exception is granted by the **Comptroller** upon application by the **Agency**. In the alternative, subject to the approval of the **CCPO**, the **Contractor** and **Subcontractor** may maintain an electronic or biometric sign-in system, which provides the information required by this Article 37.6.2; and

37.6.3 Individual Employee Information Notices: Distribute a notice to each worker, laborer or mechanic employed under this **Contract**, in a form provided by the **Agency**, that this **Project** is a public works project on which each worker, laborer or mechanic is entitled to receive the prevailing rate of wages and supplements for the occupation at which he or she is working. If the total cost of the **Work** under this **Contract** is at least two hundred fifty thousand ($250,000) dollars, such notice shall also include a statement that each worker, laborer or mechanic must be certified prior to performing any **Work** as having successfully completed a course in construction safety and health approved by the United States Department of Labor's Occupational Safety and Health Administration that is at least ten (10) hours in duration. Such notice shall be distributed to each worker before he or she starts performing any **Work** of this **Contract** and with the first paycheck after July first of each year. "Worker, laborer or mechanic" includes employees of the **Contractor** and all **Subcontractors** and all employees of suppliers entering the **Site**. At the time of distribution, the **Contractor** shall have each worker, laborer or mechanic sign a statement, in a form provided by the **Agency**, certifying that the worker has received the notice required by this Article 37.6.3, which signed statement shall be maintained with the payroll records required by this **Contract**; and

37.6.3(a) The **Contractor** and each **Subcontractor** shall notify each worker, laborer or mechanic employed under this **Contract** in writing of the prevailing rate of

wages for their particular job classification. Such notification shall be given to every worker, laborer, and mechanic on their first pay stub and with every pay stub thereafter; and

37.6.4 **Site** Laminated Identification Badges: The **Contractor** shall provide laminated identification badges which include a photograph of the worker's, laborer's or mechanic's face and indicate the worker's, laborer's or mechanic's name, trade, employer's name, and employment starting date (month/day/year). Further, the **Contractor** shall require as a condition of employment on the **Site**, that each and every worker, laborer or mechanic wear the laminated identification badge at all times and that it may be seen by any representative of the **City**. The **Commissioner** may grant a written waiver from the requirement that the laminated identification badge include a photograph if the **Contractor** demonstrates that the identity of an individual wearing a laminated identification badge can be easily verified by another method; and

37.6.5 Language Other Than English Used On **Site**: Provide the **ACCO** notice when three (3) or more employees (worker and/or laborer and/or mechanic) on the **Site**, at any time, speak a language other than English. The **ACCO** will then provide the **Contractor** the notices described in Article 37.6.1 in that language or languages as may be required. The **Contractor** is responsible for all distributions under this Article 37; and

37.6.6 Provision of Records: The **Contractor** and **Subcontractor(s)** shall produce within five (5) **Days** on the **Site** of the **Work** and upon a written order of the **Engineer**, the **Commissioner**, the **ACCO**, the **Agency EAO**, or the **Comptroller,** such records as are required to be kept by this Article 37.6; and

37.6.7 The **Contractor** and **Subcontractor(s)** shall pay employees by check or direct deposit. If this **Contract** is for an amount greater than one million ($1,000,000) dollars, checks issued by the **Contractor** to covered employees shall be generated by a payroll service or automated payroll system (an in-house system may be used if approved by the **Agency**). For any subcontract for an amount greater than seven hundred fifty thousand ($750,000) dollars, checks issued by a **Subcontractor** to covered employees shall be generated by a payroll service or automated payroll system (an in-house system may be used if approved by the **Agency**); and

37.6.8 The failure of the **Contractor** or **Subcontractor(s)** to comply with the provisions of Articles 37.6.1 through 37.6.7 may result in the **Commissioner** declaring the **Contractor** in default and/or the withholding of payments otherwise due under the **Contract**.

37.7 The **Contractor** and its **Subcontractors** shall keep such employment and payroll records as are required by Section 220 of the Labor Law. The failure of the **Contractor** or **Subcontractor(s)** to comply with the provisions of this Article 37.7 may result in the **Commissioner** declaring the **Contractor** in default and/or the withholding of payments otherwise due under the **Contract.**

37.8 At the time the **Contractor** makes application for each partial payment and for final payment, the **Contractor** shall submit to the **Commissioner** a written payroll certification, in the form provided by this **Contract**, of compliance with the prevailing wage, minimum wage, and other provisions and stipulations required by Labor Law Section 220 and of compliance with the training requirements of Labor Law Section 220-h set forth in Article 35.2. This certification of compliance shall be a condition precedent to payment and no payment shall be made to the **Contractor** unless and until each such certification shall have been submitted to and received by the **Commissioner**.

37.9 This **Contract** is executed by the **Contractor** with the express warranty and representation that the **Contractor** is not disqualified under the provisions of Section 220 of the Labor Law from the award of the **Contract**.

37.10 Any breach or violation of any of the foregoing shall be deemed a breach or violation of a material provision of this **Contract**, and grounds for cancellation thereof by the **City**.

ARTICLE 38. PAYROLL REPORTS

38.1 The **Contractor** and its **Subcontractor(s)** shall maintain on the **Site** during the performance of the **Work** the original payrolls or transcripts thereof which the **Contractor** and its **Subcontractor(s)** are required to maintain and shall submit such original payrolls or transcripts, subscribed and affirmed by it as true, within thirty (30) **Days** after issuance of its first payroll, and every thirty (30) **Days** thereafter, pursuant to Labor Law Section 220(3-a)(a)(iii). The **Contractor** and **Subcontractor(s)** shall submit such original payrolls or transcripts along with each and every payment requisition. If payment requisitions are not submitted at least once a month, the **Contractor** and its **Subcontractor(s)** shall submit original payrolls and transcripts both along with its payment requisitions and independently of its payment requisitions.

38.2 The **Contractor** shall maintain payrolls or transcripts thereof for six (6) years from the date of completion of the **Work** on this **Contract**. If such payrolls and transcripts are maintained outside of New York City after the completion of the **Work** and their production is required pursuant to this Article 38, the **Contractor** shall produce such records in New York City upon request by the City.

38.3 The **Contractor** and **Subcontractor(s)** shall comply with any written order, direction, or request made by the **Engineer**, the **Commissioner**, the **ACCO**, the **Agency EAO**, the **Agency Labor Law Investigator(s)**, or the **Comptroller**, to provide to the requesting party any of the following information and/or records within five (5) **Days** of such written order, direction, or request:

38.3.1 Such original payrolls or transcripts thereof subscribed and affirmed by it as true and the statements signed by each worker pursuant to this Chapter VIII; and/or

38.3.2 Attendance sheets for each **Day** on which any employee of the **Contractor** and/or any of the **Subcontractor(s)** performed **Work** on the **Site**, which attendance sheet shall be in a form acceptable to the **Agency** and shall provide information acceptable to the **Agency** to identify each such employee; and/or

38.3.3 Any other information to satisfy the **Engineer**, the **Commissioner**, the **ACCO**, the **Agency EAO**, the **Agency Labor Law Investigator(s)** or the **Comptroller**, that this Chapter VIII and the Labor Law, as to the hours of employment and prevailing rates of wages and/or supplemental benefits, are being observed.

38.4 The failure of the **Contractor** or **Subcontractor(s)** to comply with the provisions of Articles 38.1 and/or 38.2 may result in the **Commissioner** declaring the **Contractor** in default and/or the withholding of payments otherwise due under the **Contract**.

ARTICLE 39. DUST HAZARDS

39.1 Should a harmful dust hazard be created in performing the **Work** of this **Contract**, for the elimination of which appliances or methods have been approved by the Board of Standards and Appeals

of the City of New York, such appliances and methods shall be installed, maintained, and effectively operated during the continuance of such harmful dust hazard. Failure to comply with this provision after notice shall make this **Contract** voidable at the sole discretion of the **City**.

CHAPTER IX: PARTIAL AND FINAL PAYMENTS

ARTICLE 40. CONTRACT PRICE

40.1 The **City** shall pay, and the **Contractor** agrees to accept, in full consideration for the **Contractor's** performance of the **Work** subject to the terms and conditions hereof, the lump sum price or unit prices for which this **Contract** was awarded, plus the amount required to be paid for any **Extra Work** ordered by the **Commissioner** under Article 25, less credit for any **Work** omitted pursuant to Article 29.

ARTICLE 41. BID BREAKDOWN ON LUMP SUM

41.1 Within fifteen (15) **Days** after the commencement date specified in the **Notice to Proceed** or **Order to Work**, unless otherwise directed by the **Resident Engineer**, the **Contractor** shall submit to the **Resident Engineer** a breakdown of its bid price, or of lump sums bid for items of the **Contract**, showing the various operations to be performed under the **Contract**, as directed in the progress schedule required under Article 9, and the value of each of such operations, the total of such items to equal the lump sum price bid. Said breakdown must be approved in writing by the **Resident Engineer**.

41.2 No partial payment will be approved until the **Contractor** submits a bid breakdown that is acceptable to the **Resident Engineer**.

41.3 The **Contractor** shall also submit such other information relating to the bid breakdown as directed by the **Resident Engineer**. Thereafter, the breakdown may be used only for checking the **Contractor's** applications for partial payments hereunder, but shall not be binding upon the **City**, the **Commissioner**, or the **Engineer** for any purpose whatsoever.

ARTICLE 42. PARTIAL PAYMENTS

42.1 From time to time as the **Work** progresses satisfactorily, but not more often than once each calendar month (except where the **Commissioner** approves in writing the submission of invoices on a more frequent basis and for invoices relating to **Work** performed pursuant to a change order), the **Contractor** may submit to the **Engineer** a requisition for a partial payment in the prescribed form, which shall contain an estimate of the quantity and the fair value of the **Work** done during the payment period.

42.2 Partial payments may be made for materials, fixtures, and equipment in advance of their actual incorporation in the **Work**, as the **Commissioner** may approve, and upon the terms and conditions set forth in the General Conditions.

42.3 The **Contractor** shall also submit to the **Commissioner** in connection with every application for partial payment a verified statement in the form prescribed by the **Comptroller** setting forth the information required under Labor Law Section 220-a.

42.4 Within thirty (30) **Days** after receipt of a satisfactory payment application, and within sixty (60) **Days** after receipt of a satisfactory payment application in relation to **Work** performed pursuant to a change order, the **Engineer** will prepare and certify, and the **Commissioner** will approve, a voucher for a partial payment in the amount of such approved estimate, less any and all deductions authorized to be made by the **Commissioner** under the terms of this **Contract** or by **Law**.

ARTICLE 43. PROMPT PAYMENT

43.1 The Prompt Payment provisions of the **PPB** Rules in effect at the time of the bid will be applicable to payments made under this **Contract**. The provisions require the payment to the **Contractor** of interest on payments made after the required payment date, except as set forth in the **PPB** Rules.

43.2 The **Contractor** shall submit a proper invoice to receive payment, except where the **Contract** provides that the **Contractor** will be paid at predetermined intervals without having to submit an invoice for each scheduled payment.

43.3 Determination of interest due will be made in accordance with the **PPB** Rules.

43.4 If the **Contractor** is paid interest, the proportionate share(s) of that interest shall be forwarded by the **Contractor** to its **Subcontractor(s)**.

43.5 The **Contractor** shall pay each **Subcontractor** or **Materialman** not later than seven (7) **Days** after receipt of payment out of amounts paid to the **Contractor** by the **City** for **Work** performed by the **Subcontractor** or **Materialman** under this **Contract**.

> 43.5.1 If **Contractor** fails to make any payment to any **Subcontractor** or **Materialman** within seven (7) **Days** after receipt of payment by the **City** pursuant to this Article 43.5, then the **Contractor** shall pay interest on amounts due to such **Subcontractor** or **Materialman** at the rate of interest in effect on the date such payment is made by the **Contractor** computed in accordance with Section 756-b (1)(b) of the New York General Business Law. Accrual of interest shall commence on the **Day** immediately following the expiration of the seventh **Day** following receipt of payment by the **Contractor** from the **City** and shall end on the date on which payment is made.

43.6 The **Contractor** shall include in each of its subcontracts a provision requiring each **Subcontractor** to make payment to each of its **Subcontractors** or **Materialmen** for **Work** performed under this **Contract** in the same manner and within the same time period set forth above.

ARTICLE 44. SUBSTANTIAL COMPLETION PAYMENT

44.1 The **Contractor** shall submit with the **Substantial Completion** requisition:

> 44.1.1 A final verified statement of any pending Article 27 disputes in accordance with the **PPB** Rules and this **Contract** and any and all alleged claims against the **City**, in any way connected with or arising out of this **Contract** (including those as to which details may have been furnished pursuant to Articles 11, 27, 28, and 30) setting forth with respect to each such claim the total amount thereof, the various items of labor and materials included therein, and the alleged value of each item; and if the alleged claim be one for delay, the alleged cause of each such delay, the period or periods of time, giving the dates when the

Contractor claims the performance of the **Work** or a particular part thereof was delayed, and an itemized statement and breakdown of the amount claimed for each such delay.

44.1.1(a) With respect to each such claim, the **Commissioner**, the **Comptroller** and, in the event of litigation, the **City** Corporation Counsel shall have the same right to inspect, and to make extracts or copies of, the **Contractor's** books, vouchers, records, etc., as is referred to in Articles 11, 27, 28, and 30. Nothing contained in this Article 44.1.1(a) is intended to or shall relieve the **Contractor** from the obligation of complying strictly with Articles 11, 27, 28, and 30. The **Contractor** is warned that unless such claims are completely set forth as herein required, the **Contractor** upon acceptance of the **Substantial Completion** payment pursuant to this Article 44, will have waived any such claims.

44.1.2 A **Final Approved Punch List**.

44.1.3 Where required, a request for an extension of time to achieve **Substantial Completion** or final extension of time.

44.2 The **Commissioner** shall issue a voucher calling for payment of any part or all of the balance due for **Work** performed under the **Contract**, including monies retained under Article 21, less any and all deductions authorized to be made by the **Commissioner**, under this **Contract** or by **Law**, and less twice the amount the **Commissioner** considers necessary to ensure the completion of the balance of the **Work** by the **Contractor**. Such a payment shall be considered a partial and not a final payment. No **Substantial Completion** payment shall be made under this Article 44 where the **Contractor** failed to complete the **Work** within the time fixed for such completion in the Schedule A of the General Conditions, or within the time to which completion may have been extended, until an extension or extensions of time for the completion of **Work** have been acted upon pursuant to Article 13.

44.3 No further partial payments shall be made to the **Contractor** after **Substantial Completion**, except the **Substantial Completion** payment and payment pursuant to any **Contractor's** requisition that were properly filed with the **Commissioner** prior to the date of **Substantial Completion**; however, the **Commissioner** may grant a waiver for further partial payments after the date of **Substantial Completion** to permit payments for change order **Work** and/or release of retainage and deposits pursuant to Articles 21 and 24. Such waiver shall be in writing.

44.4 The **Contractor** acknowledges that nothing contained in this Article 44 is intended to or shall in any way diminish the force and effect of Article 13.

ARTICLE 45. FINAL PAYMENT

45.1 After completion and **Final Acceptance** of the **Work**, the **Contractor** shall submit all required certificates and documents, together with a requisition for the balance claimed to be due under the **Contract**, less the amount authorized to be retained for maintenance under Article 24. Such submission shall be within 90 days of the date of the **Commissioner's** written determination of **Final Acceptance**, or within such additional time as may be granted by the **Commissioner** in writing. If the **Contractor** fails to submit all required certificates and documents within the time allowed, no payment of the balance claimed shall be made to the **Contractor** and the **Contractor** shall be deemed to have forfeited its right to payment of any balance claimed. A verified statement similar to that required in connection with applications for partial payments shall also be submitted to the **Commissioner**.

45.2 Amended Verified Statement of Claims: The **Contractor** shall also submit with the final requisition any amendments to the final verified statement of any pending dispute resolution procedures in accordance with the **PPB** Rules and this **Contract** and any and all alleged claims against the **City**, in any way connected with or arising out of this **Contract** (including those as to which details may have been furnished pursuant to Articles 11, 27, 28, and 30) that have occurred subsequent to **Substantial Completion**, setting forth with respect to each such claim the total amount thereof, the various items of labor and materials included therein, and the alleged value of each such item; and if the alleged claim be one for delay, the alleged cause of each such delay, the period or periods of time, giving the dates when the **Contractor** claims the performance of the **Work** or a particular part thereof was delayed, and an itemized statement and breakdown of the amount claimed for each such delay. With reference to each such claim, the **Commissioner**, the **Comptroller** and, in the event of litigation, the **City** Corporation Counsel shall have the same right to inspect, and to make extracts or copies of, the **Contractor's** books, vouchers, records, etc., as is referred to in Articles 11, 27, 28, and 30. Nothing contained in this Article 45.2, is intended to or shall relieve the **Contractor** from the obligation of complying strictly with Articles 11, 27, 28, and 30. The **Contractor** is warned that unless such claims are completely set forth as herein required, the **Contractor**, upon acceptance of the Final Payment pursuant to Article 46, will have waived any such claims.

45.3 Preparation of Final Voucher: Upon determining the balance due hereunder other than on account of claims, the **Engineer** will prepare and certify, for the Commissioner's approval, a voucher for final payment in that amount less any and all deductions authorized to be made by the **Commissioner** under this **Contract** or by **Law**. In the case of a lump sum **Contract**, the **Commissioner** shall certify the voucher for final payment within thirty (30) **Days** from the date of completion and acceptance of the **Work**, provided all requests for extensions of time have been acted upon.

45.3.1 All prior certificates and vouchers upon which partial payments were made, being merely estimates made to enable the **Contractor** to prosecute the **Work** more advantageously, shall be subject to correction in the final voucher, and the certification of the **Engineer** thereon and the approval of the **Commissioner** thereof, shall be conditions precedent to the right of the **Contractor** to receive any money hereunder. Such final voucher shall be binding and conclusive upon the **Contractor**.

45.3.2 Payment pursuant to such final voucher, less any deductions authorized to be made by the **Commissioner** under this **Contract** or by **Law**, shall constitute the final payment, and shall be made by the **Comptroller** within thirty (30) **Days** after the filing of such voucher in his/her office.

45.4 The **Contractor** acknowledges that nothing contained in this Article 45 is intended to or shall in any way diminish the force and effect of Article 13.

ARTICLE 46. ACCEPTANCE OF FINAL PAYMENT

46.1 The acceptance by the **Contractor**, or by anyone claiming by or through it, of the final payment, whether such payment be made pursuant to any judgment of any court, or otherwise, shall constitute and operate as a release of the **City** from any and all claims of and liability to the **Contractor** for anything heretofore done or furnished for the **Contractor** relating to or arising out of this **Contract** and the **Work** done hereunder, and for any prior act, neglect or default on the part of the **City** or any of its officials, agents or employees, excepting only a claim against the **City** for the amounts deducted or retained in accordance with the terms and provisions of this **Contract** or by **Law**, and excepting any claims, not otherwise waived, or any pending dispute resolution procedures which are contained in the

verified statement filed with the **Contractor's** substantial and final requisitions pursuant to Articles 44 and 45.

46.2 The **Contractor** is warned that the execution by it of a release, in connection with the acceptance of the final payment, containing language purporting to reserve claims other than those herein specifically excepted from the operation of this Article 46, or those for amounts deducted by the **Commissioner** from the final requisition or from the final payment as certified by the **Engineer** and approved by the **Commissioner**, shall not be effective to reserve such claims, anything stated to the **Contractor** orally or in writing by any official, agent or employee of the **City** to the contrary notwithstanding.

46.3 Should the **Contractor** refuse to accept the final payment as tendered by the **Comptroller**, it shall constitute a waiver of any right to interest thereon.

46.4 The **Contractor**, however, shall not be barred by this Article 46 from commencing an action for breach of **Contract** to the extent permitted by **Law** and by the terms of the **Contract** for any claims that are contained in the verified statement filed with the **Contractor's** substantial and final requisitions pursuant to Articles 44 and 45 or that arose after submission of the final payment requisition, provided that a detailed and verified statement of claim is served upon the contracting **Agency** and **Comptroller** not later than forty (40) **Days** after the making of such final payment by electronic funds transfer (EFT) or the mailing of such final payment. The statement shall specify the items upon which the claim will be based and any such claim shall be limited to such items.

ARTICLE 47. APPROVAL BY PUBLIC DESIGN COMMISSION

47.1 All works of art, including paintings, mural decorations, stained glass, statues, bas-reliefs, and other sculptures, monuments, fountains, arches, and other structures of a permanent character intended for ornament or commemoration, and every design of the same to be used in the performance of this **Contract**, and the design of all bridges, approaches, buildings, gates, fences, lamps, or structures to be erected, pursuant to the terms of this **Contract**, shall be submitted to the Art Commission, d/b/a the Public Design Commission of the City of New York, and shall be approved by the Public Design Commission prior to the erection or placing in position of the same. The final payment shall not become due or payable under this **Contract** unless and until the Public Design Commission shall certify that the design for the **Work** herein contracted for has been approved by the said Public Design Commission, and that the same has been executed in substantial accordance with the design so approved, pursuant to the provisions of Chapter 37, Section 854 of the **City** Charter, as amended.

CHAPTER X: CONTRACTOR'S DEFAULT

ARTICLE 48. COMMISSIONER'S RIGHT TO DECLARE CONTRACTOR IN DEFAULT

48.1 In addition to those instances specifically referred to in other Articles herein, the **Commissioner** shall have the right to declare the **Contractor** in default of this **Contract** if:

48.1.1 The **Contractor** fails to commence **Work** when notified to do so by the **Commissioner**; or if

48.1.2 The **Contractor** shall abandon the **Work**; or if

48.1.3 The **Contractor** shall refuse to proceed with the **Work** when and as directed by the **Commissioner**; or if

48.1.4 The **Contractor** shall, without just cause, reduce its working force to a number which, if maintained, would be insufficient, in the opinion of the **Commissioner**, to complete the **Work** in accordance with the progress schedule; or if

48.1.5 The **Contractor** shall fail or refuse to increase sufficiently such working force when ordered to do so by the **Commissioner**; or if

48.1.6 The **Contractor** shall sublet, assign, transfer, convert or otherwise dispose of this **Contract** other than as herein specified; or sell or assign a majority interest in the **Contractor**; or if

48.1.7 The **Contractor** fails to secure and maintain all required insurance; or if

48.1.8 A receiver or receivers are appointed to take charge of the **Contractor's** property or affairs; or if

48.1.9 The **Commissioner** shall be of the opinion that the **Contractor** is or has been unnecessarily or unreasonably or willfully delaying the performance and completion of the **Work**, or the award of necessary subcontracts, or the placing of necessary material and equipment orders; or if

48.1.10 The **Commissioner** shall be of the opinion that the **Contractor** is or has been willfully or in bad faith violating any of the provisions of this **Contract**; or if

48.1.11 The **Commissioner** shall be of the opinion that the **Work** cannot be completed within the time herein provided therefor or within the time to which such completion may have been extended; provided, however, that the impossibility of timely completion is, in the **Commissioner's** opinion, attributable to conditions within the **Contractor's** control; or if

48.1.12 The **Work** is not completed within the time herein provided therefor or within the time to which the **Contractor** may be entitled to have such completion extended; or if

48.1.13 Any statement or representation of the **Contractor** in the **Contract** or in any document submitted by the **Contractor** with respect to the **Work**, the **Project**, or the **Contract** (or for purposes of securing the **Contract**) was untrue or incorrect when made; or if

48.1.14 The **Contractor** or any of its officers, directors, partners, five (5%) percent shareholders, principals, or other persons substantially involved in its activities, commits any of the acts or omissions specified as the grounds for debarment in the **PPB** Rules.

48.2 Before the **Commissioner** shall exercise his/her right to declare the **Contractor** in default, the **Commissioner** shall give the **Contractor** an opportunity to be heard, upon not less than two (2) **Days**' notice.

ARTICLE 49. EXERCISE OF THE RIGHT TO DECLARE DEFAULT

49.1 The right to declare the **Contractor** in default for any of the grounds specified or referred to in Article 48 shall be exercised by sending the **Contractor** a notice, signed by the **Commissioner**, setting forth the ground or grounds upon which such default is declared (hereinafter referred to as a "Notice of Default").

49.2 The **Commissioner's** determination that the **Contractor** is in default shall be conclusive, final, and binding on the parties and such a finding shall preclude the **Contractor** from commencing a plenary action for any damages relating to the **Contract**. If the **Contractor** protests the determination of the **Commissioner**, the **Contractor** may commence an action in a court of competent jurisdiction of the State of New York under Article 78 of the New York Civil Practice Law and Rules.

ARTICLE 50. QUITTING THE SITE

50.1 Upon receipt of such notice the **Contractor** shall immediately discontinue all further operations under this **Contract** and shall immediately quit the **Site**, leaving untouched all plant, materials, equipment, tools, and supplies then on the **Site**.

ARTICLE 51. COMPLETION OF THE WORK

51.1 The **Commissioner**, after declaring the **Contractor** in default, may then have the **Work** completed by such means and in such manner, by contract with or without public letting, or otherwise, as he/she may deem advisable, utilizing for such purpose such of the **Contractor's** plant, materials, equipment, tools, and supplies remaining on the **Site**, and also such **Subcontractors**, as he/she may deem advisable.

51.2 After such completion, the **Commissioner** shall make a certificate stating the expense incurred in such completion, which shall include the cost of re-letting and also the total amount of liquidated damages (at the rate provided for in the **Contract**) from the date when the **Work** should have been completed by the **Contractor** in accordance with the terms hereof to the date of actual completion of the **Work**. Such certificate shall be binding and conclusive upon the **Contractor**, its sureties, and any person claiming under the **Contractor**, as to the amount thereof.

51.3 The expense of such completion, including any and all related and incidental costs, as so certified by the **Commissioner**, and any liquidated damages assessed against the **Contractor**, shall be charged against and deducted out of monies which are earned by the **Contractor** prior to the date of default. Should the expense of such completion, as certified by the **Commissioner**, exceed the total sum which would have been payable under the **Contract** if it had been completed by the **Contractor**, any excess shall be paid by the **Contractor**.

ARTICLE 52. PARTIAL DEFAULT

52.1 In case the **Commissioner** shall declare the **Contractor** in default as to a part of the **Work** only, the **Contractor** shall discontinue such part, shall continue performing the remainder of the **Work** in strict conformity with the terms of this **Contract**, and shall in no way hinder or interfere with any **Other Contractor(s)** or persons whom the **Commissioner** may engage to complete the **Work** as to which the **Contractor** was declared in default.

52.2 The provisions of this Chapter relating to declaring the **Contractor** in default as to the entire **Work** shall be equally applicable to a declaration of partial default, except that the **Commissioner** shall be entitled to utilize for completion of the part of the **Work** as to which the **Contractor** was declared in default only such plant, materials, equipment, tools, and supplies as had been previously used by the **Contractor** on such part.

ARTICLE 53. PERFORMANCE OF UNCOMPLETED WORK

53.1 In completing the whole or any part of the **Work** under the provisions of this Chapter X, the **Commissioner** shall have the power to depart from or change or vary the terms and provisions of this **Contract**, provided, however, that such departure, change or variation is made for the purpose of reducing the time or expense of such completion. Such departure, change or variation, even to the extent of accepting a lesser or different performance, shall not affect the conclusiveness of the **Commissioner's** certificate of the cost of completion referred to in Article 51, nor shall it constitute a defense to an action to recover the amount by which such certificate exceeds the amount which would have been payable to the **Contractor** hereunder but for its default.

ARTICLE 54. OTHER REMEDIES

54.1 In addition to the right to declare the **Contractor** in default pursuant to this Chapter X, the **Commissioner** shall have the absolute right, in his/her sole discretion and without a hearing, to complete or cause to be completed in the same manner as described in Articles 51 and 53, any or all unsatisfactory or uncompleted punch list **Work** that remains after the completion date specified in the **Final Approved Punch List**. A written notice of the exercise of this right shall be sent to the **Contractor** who shall immediately quit the **Site** in accordance with the provisions of Article 50.

54.2 The expense of completion permitted under Article 54.1, including any and all related and incidental costs, as so certified by the **Commissioner**, shall be charged against and deducted out of monies which have been earned by the **Contractor** prior to the date of the exercise of the right set forth in Article 54.1; the balance of such monies, if any, subject to the other provisions of this **Contract**, to be paid to the **Contractor** without interest after such completion. Should the expense of such completion, as certified by the **Commissioner**, exceed the total sum which would have been payable under the **Contract** if it had been completed by the **Contractor**, any excess shall be paid by the **Contractor**.

54.3 The previous provisions of this Chapter X shall be in addition to any and all other remedies available under **Law** or in equity.

54.4 The exercise by the **City** of any remedy set forth herein shall not be deemed a waiver by the **City** of any other legal or equitable remedy contained in this **Contract** or provided under **Law**.

CHAPTER XI: MISCELLANEOUS PROVISIONS

ARTICLE 55. CONTRACTOR'S WARRANTIES

55.1 In consideration of, and to induce, the award of this **Contract** to the **Contractor**, the **Contractor** represents and warrants:

55.1.1 That it is financially solvent, sufficiently experienced and competent to perform the **Work**; and

55.1.2 That the facts stated in its bid and the information given by it pursuant to the Information for Bidders is true and correct in all respects; and

55.1.3 That it has read and complied with all requirements set forth in the **Contract**.

ARTICLE 56. CLAIMS AND ACTIONS THEREON

56.1 Any claim, that is not subject to dispute resolution under the **PPB** Rules or this **Contract**, against the **City** for damages for breach of **Contract** shall not be made or asserted in any action, unless the **Contractor** shall have strictly complied with all requirements relating to the giving of notice and of information with respect to such claims, as herein before provided.

56.2 Nor shall any action be instituted or maintained on any such claims unless such action is commenced within six (6) months after **Substantial Completion**; except that:

56.2.1 Any claims arising out of events occurring after **Substantial Completion** and before **Final Acceptance** of the **Work** shall be asserted within six (6) months of **Final Acceptance** of the **Work**;

56.2.2 If the **Commissioner** exercises his/her right to complete or cause to complete any or all unsatisfactory or uncompleted punch list **Work** that remains after the completion date specified in the **Final Approved Punch List** pursuant to Article 54, any such action shall be commenced within six (6) months from the date the **Commissioner** notifies the **Contractor** in writing that he/she has exercised such right. Any claims for monies deducted, retained or withheld under the provisions of this **Contract** shall be asserted within six (6) months after the date when such monies otherwise become due and payable hereunder; and

56.2.3 If the **Commissioner** exercises his/her right to terminate the **Contract** pursuant to Article 64, any such action shall be commenced within six (6) months of the date the **Commissioner** exercises said right.

ARTICLE 57. INFRINGEMENT

57.1 The **Contractor** shall be solely responsible for and shall defend, indemnify, and hold the **City** harmless from any and all claims (even if the allegations of the lawsuit are without merit) and judgments for damages and from costs and expenses to which the **City** may be subject to or which it may suffer or incur allegedly arising out of or in connection with any infringement by the **Contractor** of any copyright, trade secrets, trademark or patent rights or any other property or personal right of any third party by the **Contractor** and/or its **Subcontractors** in the performance or completion of the **Work**. Insofar as the facts or **Law** relating to any claim would preclude the **City** from being completely indemnified by the **Contractor**, the **City** shall be partially indemnified by the **Contractor** to the fullest extent permitted by **Law**.

ARTICLE 58. NO CLAIM AGAINST OFFICIALS, AGENTS OR EMPLOYEES

58.1 No claim whatsoever shall be made by the **Contractor** against any official, agent or employee of the **City** for, or on account of, anything done or omitted to be done in connection with this **Contract**.

ARTICLE 59. SERVICE OF NOTICES

59.1 The **Contractor** hereby designates the business address, fax number, and email address specified in its bid, as the place where all notices, directions or other communications to the **Contractor** may be delivered, or to which they may be mailed. Any notice, direction, or communication from either party to the other shall be in writing and shall be deemed to have been given when (i) delivered personally; (ii) sent by certified mail, return receipt requested; (iii) delivered by overnight or same day courier service in a properly addressed envelope with confirmation; or (iv) sent by fax or email and, unless receipt of the fax or e-mail is acknowledged by the recipient by fax or e-mail, deposited in a post office box regularly maintained by the United States Postal Service in a properly addressed, postage pre-paid envelope.

59.2 **Contractor's** notice address, email address, or fax number may be changed at any time by an instrument in writing, executed and acknowledged by the **Contractor**, and delivered to the **Commissioner**.

59.3 Nothing herein contained shall, however, be deemed to preclude or render inoperative the service of any notice, direction or other communication upon the **Contractor** personally, or, if the **Contractor** is a corporation, upon any officer thereof.

ARTICLE 60. UNLAWFUL PROVISIONS DEEMED STRICKEN FROM CONTRACT

60.1 If this **Contract** contains any unlawful provision not an essential part of the **Contract** and which shall not appear to have been a controlling or material inducement to the making thereof, the same shall be deemed of no effect and shall, upon notice by either party, be deemed stricken from the **Contract** without affecting the binding force of the remainder.

ARTICLE 61. ALL LEGAL PROVISIONS DEEMED INCLUDED

61.1 It is the intent and understanding of the parties to this **Contract** that each and every provision of **Law** required to be inserted in this **Contract** shall be and is inserted herein. Furthermore, it is hereby stipulated that every such provision is to be deemed to be inserted herein, and if, through mistake or otherwise, any such provision is not inserted, or is not inserted in correct form, then this **Contract** shall forthwith upon the application of either party be amended by such insertion so as to comply strictly with the **Law** and without prejudice to the rights of either party hereunder.

ARTICLE 62. TAX EXEMPTION

62.1 The **City** is exempt from payment of Federal, State, and local taxes, including sales and compensating use taxes of the State of New York and its cities and counties on all tangible personal property sold to the **City** pursuant to the provisions of this **Contract**. These taxes are not to be included in bids. However, this exemption does not apply to tools, machinery, equipment or other property leased by or to the **Contractor**, **Subcontractor** or **Materialman** or to tangible personal property which, even

though it is consumed, is not incorporated into the completed **Work** (consumable supplies) and tangible personal property that the **Contractor** is required to remove from the **Site** during or upon completion of the **Work**. The **Contractor** and its **Subcontractors** and **Materialmen** shall be responsible for and pay any and all applicable taxes, including sales and compensating use taxes, on such leased tools, machinery, equipment or other property and upon all such consumable supplies and tangible personal property that the **Contractor** is required to remove from the **Site** during or upon completion of the **Work**.

62.2 The **Contractor** agrees to sell and the **City** agrees to purchase all tangible personal property, other than consumable supplies and other tangible personal property that the **Contractor** is required to remove from the **Site** during or upon completion of the **Work**, that is required, necessary or proper for or incidental to the construction of the **Project** covered by this **Contract**. The sum paid under this **Contract** for such tangible personal property shall be in full payment and consideration for the sale of such tangible personal property.

62.2.1 The **Contractor** agrees to construct the **Project** and to perform all **Work**, labor and services rendered, necessary, proper or incidental thereto for the sum shown in the bid for the performance of such **Work**, labor, and services, and the sum so paid pursuant to this **Contract** for such **Work**, labor, and services, shall be in full consideration for the performance by the **Contractor** of all its duties and obligations under this **Contract** in connection with said **Work,** labor, and services.

62.3 20 NYCRR Section 541.3(d) provides that a **Contractor**'s purchases of tangible personal property that is either incorporated into real property owned by a governmental entity or purchased for and sold to a governmental entity are exempt from sales and use tax. The **City** shall not pay sales tax for any such tangible personal property that it purchases from the **Contractor** pursuant to the **Contract.** With respect to such tangible personal property, the **Contractor**, at the request of the **City**, shall furnish to the **City** such bills of sale and other instruments as may be required by the **City**, properly executed, acknowledged and delivered assuring to the **City** title to such tangible personal property, free of liens and/or encumbrances, and the **Contractor** shall mark or otherwise identify all such tangible personal property as the property of the **City**.

62.4 Title to all tangible personal property to be sold by the **Contractor** to the **City** pursuant to the provisions of the **Contract** shall immediately vest in and become the sole property of the **City** upon delivery of such tangible personal property to the **Site**. Notwithstanding such transfer of title, the **Contractor** shall have the full and continuing responsibility to install such tangible personal property in accordance with the provisions of this **Contract**, protect it, maintain it in a proper condition and forthwith repair, replace and make good any damage thereto, theft or disappearance thereof, and furnish additional tangible personal property in place of any that may be lost, stolen or rendered unusable, without cost to the **City**, until such time as the **Work** covered by the **Contract** is fully accepted by the **City**. Such transfer of title shall in no way affect any of the **Contractor's** obligations hereunder. In the event that, after title has passed to the **City**, any of the tangible personal property is rejected as being defective or otherwise unsatisfactory, title to all such tangible personal property shall be deemed to have been transferred back to the **Contractor**.

62.5 The purchase by **Subcontractors** or **Materialmen** of tangible personal property to be sold hereunder shall be a purchase or procurement for resale to the **Contractor** (either directly or through other **Subcontractors**) and therefore not subject to the aforesaid sales and compensating use taxes, provided that the subcontracts and purchase agreements provide for the resale of such tangible personal property and that such subcontracts and purchase agreements are in a form similar to this **Contract** with respect to the separation of the sale of consumable supplies and tangible personal property that the

Contractor is required to remove from the **Site** during or upon completion of the **Work** from the **Work** and labor, services, and any other matters to be provided, and provided further that the subcontracts and purchase agreements provide separate prices for tangible personal property and all other services and matters. Such separation shall actually be followed in practice, including the separation of payments for tangible personal property from the payments for other **Work** and labor and other things to be provided.

62.6 The **Contractor** and its **Subcontractors** and **Materialmen** shall furnish a **Contractor** Exempt Purchase Certificate to all persons, firms or corporations from which they purchase tangible personal property for the performance of the **Work** covered by this **Contract**.

62.7 In the event any of the provisions of this Article 62 shall be deemed to be in conflict with any other provisions of this **Contract** or create any ambiguity, then the provisions of this Article 62 shall control.

ARTICLE 63. INVESTIGATION(S) CLAUSE

63.1 The parties to this **Contract** agree to cooperate fully and faithfully with any investigation, audit or inquiry conducted by a United States, a State of New York (State) or a **City** governmental agency or authority that is empowered directly or by designation to compel the attendance of witnesses and to examine witnesses under oath, or conducted by the Inspector General of a governmental agency that is a party in interest to the transaction, submitted bid, submitted proposal, contract, lease, permit or license that is the subject of the investigation, audit or inquiry.

63.2 If any person who has been advised that his/her statement, and any information from such statement, will not be used against him/her in any subsequent criminal proceeding refuses to testify before a grand jury or other governmental agency or authority empowered directly or by designation to compel the attendance of witnesses and to examine witnesses under oath concerning the award of or performance under any transaction, agreement, lease, permit, contract, or license entered into with the **City**, the State, or any political subdivision or public authority thereof, or the Port Authority of New York and New Jersey, or any local development corporation within the **City**, or any public benefit corporation organized under the **Laws** of the State of New York, or;

63.3 If any person refuses to testify for a reason other than the assertion of his/her privilege against self incrimination in an investigation, audit or inquiry conducted by a **City** or State governmental agency or authority empowered directly or by designation to compel the attendance of witnesses and to take testimony under oath, or by the Inspector General of the governmental agency that is a party in interest in, and is seeking testimony concerning the award of, or performance under any transaction, agreement, lease, permit, contract, or license entered into with the **City**, the State, or any political subdivision thereof or any local development corporation within the **City**, then;

63.4 The **Commissioner** whose **Agency** is a party in interest to the transaction, submitted bid, submitted proposal, contract, lease, permit, or license shall convene a hearing, upon not less than five (5) **Days**' written notice to the parties involved to determine if any penalties should attach for the failure of a person to testify.

63.5 If any non-governmental party to the hearing requests an adjournment, the **Commissioner** who convened the hearing may, upon granting the adjournment, suspend any contract, lease, permit, or license, pending the final determination pursuant to Article 63.7 without the **City** incurring any penalty or damages for delay or otherwise.

63.6 The penalties which may attach after a final determination by the **Commissioner** may include but shall not exceed:

63.6.1 The disqualification for a period not to exceed five (5) years from the date of an adverse determination for any person, or any entity of which such person was a member at the time the testimony was sought, from submitting bids for, or transacting business with, or entering into or obtaining any contract, lease, permit or license with or from the **City**; and/or

63.6.2 The cancellation or termination of any and all such existing **City** contracts, leases, permits or licenses that the refusal to testify concerns and that have not been assigned as permitted under this **Contract**, nor the proceeds of which pledged, to an unaffiliated and unrelated institutional lender for fair value prior to the issuance of the notice scheduling the hearing, without the **City** incurring any penalty or damages on account of such cancellation or termination; monies lawfully due for goods delivered, work done, rentals, or fees accrued prior to the cancellation or termination shall be paid by the **City**.

63.7 The **Commissioner** shall consider and address in reaching his/her determination and in assessing an appropriate penalty the factors in Articles 63.7.1 and 63.7.2. The **Commissioner** may also consider, if relevant and appropriate, the criteria established in Articles 63.7.3 and 63.7.4, in addition to any other information which may be relevant and appropriate:

63.7.1 The party's good faith endeavors or lack thereof to cooperate fully and faithfully with any governmental investigation or audit, including but not limited to the discipline, discharge, or disassociation of any person failing to testify, the production of accurate and complete books and records, and the forthcoming testimony of all other members, agents, assignees or fiduciaries whose testimony is sought.

63.7.2 The relationship of the person who refused to testify to any entity that is a party to the hearing, including but not limited to, whether the person whose testimony is sought has an ownership interest in the entity and/or the degree of authority and responsibility the person has within the entity.

63.7.3 The nexus of the testimony sought to the subject entity and its contracts, leases, permits or licenses with the **City**.

63.7.4 The effect a penalty may have on an unaffiliated and unrelated party or entity that has a significant interest in an entity subject to penalties under Article 63.6, provided that the party or entity has given actual notice to the **Commissioner** upon the acquisition of the interest, or at the hearing called for in Article 63.4, gives notice and proves that such interest was previously acquired. Under either circumstance the party or entity shall present evidence at the hearing demonstrating the potential adverse impact a penalty will have on such person or entity.

63.8 Definitions:

63.8.1 The term "license" or "permit" as used in this Article 63 shall be defined as a license, permit, franchise or concession not granted as a matter of right.

63.8.2 The term "person" as used in this Article 63 shall be defined as any natural person doing business alone or associated with another person or entity as a partner, director, officer, principal or employee.

63.8.3 The term "entity" as used in this Article 63 shall be defined as any firm, partnership, corporation, association, joint venture, or person that receives monies, benefits, licenses, leases, or permits from or through the **City** or otherwise transacts business with the **City**.

63.8.4 The term "member" as used in this Article 63 shall be defined as any person associated with another person or entity as a partner, director, officer, principal or employee.

63.9 In addition to and notwithstanding any other provision of this **Contract**, the **Commissioner** may in his/her sole discretion terminate this **Contract** upon not less than three (3) **Days'** written notice in the event the **Contractor** fails to promptly report in writing to the **Commissioner** of the Department of Investigations ("DOI") of the **City** any solicitation of money, goods, requests for future employment or other benefit or thing of value, by or on behalf of any employee of the **City** or other person, firm, corporation or entity for any purpose which may be related to the procurement or obtaining of this **Contract** by the **Contractor**, or affecting the performance of this **Contract**.

ARTICLE 64. TERMINATION BY THE CITY

64.1 In addition to termination pursuant to any other article of this **Contract**, the **Commissioner** may, at any time, terminate this **Contract** by written notice to the **Contractor**. In the event of termination, the **Contractor** shall, upon receipt of such notice, unless otherwise directed by the **Commissioner**:

64.1.1 Stop **Work** on the date specified in the notice;

64.1.2 Take such action as may be necessary for the protection and preservation of the **City's** materials and property;

64.1.3 Cancel all cancelable orders for material and equipment;

64.1.4 Assign to the **City** and deliver to the **Site** or another location designated by the **Commissioner**, any non-cancelable orders for material and equipment that is not capable of use except in the performance of this **Contract** and has been specifically fabricated for the sole purpose of this **Contract** and not incorporated in the **Work**;

64.1.5 Take no action which will increase the amounts payable by the **City** under this **Contract**.

64.2 In the event of termination by the **City** pursuant to this Article 64, payment to the **Contractor** shall be in accordance with Articles 64.2.1, 64.2.2 or 64.2.3, to the extent that each respective article applies.

64.2.1 Lump Sum Contracts or Items: On all lump sum **Contracts**, or on lump sum items in a **Contract**, the **City** will pay the **Contractor** the sum of the amounts described in Articles 64.2.1(a) and 64.2.1(b), less all payments previously made pursuant to this **Contract**. On lump sum **Contracts** only, the **City** will also pay the **Contractor** an additional sum as provided in Article 64.2.1(c).

64.2.1(a) For **Work** completed prior to the notice of termination, the **Contractor** shall be paid a pro rata portion of the lump sum bid amount, plus approved change orders, based upon the percent completion of the **Work**, as determined by the

Commissioner. For the purpose of determining the pro rata portion of the lump sum bid amount to which the **Contractor** is entitled, the bid breakdown submitted in accordance with Article 41 shall be considered, but shall not be dispositive. The **Commissioner's** determination hereunder shall be final, binding, and conclusive.

64.2.1(b) For non-cancelable material and equipment that is not capable of use except in the performance of this **Contract** and has been specifically fabricated for the sole purpose of this **Contract**, but not yet incorporated in the **Work**, the **Contractor** shall be paid the lesser of the following, less salvage value:

64.2.1(b)(i) The Direct Cost, as defined in Article 64.2.4; or

64.2.1(b)(ii) The fair and reasonable value, if less than Direct Cost, of such material and equipment, plus necessary and reasonable delivery costs.

64.2.1(b)(iii) In addition, the **Contractor** shall be paid five (5%) percent of the amount described in Article 64.2.1(b)(i) or Article 64.2.1(b)(ii), whichever applies.

64.2.1(c) Except as otherwise provided in Article 64.2.1(d), on all lump sum **Contracts**, the **Contractor** shall be paid the percentage indicated below applied to the difference between the total lump sum bid amount and the total of all payments made prior to the notice of termination plus all payments allowed pursuant to Articles 64.2.1(a) and 64.2.1(b):

64.2.1(c)(i) Five (5%) percent of the first five million ($5,000,000) dollars; and

64.2.1(c)(ii) Three (3%) percent of any amount between five million ($5,000,000) dollars and fifteen million ($15,000,000) dollars; plus

64.2.1(c)(iii) One (1%) percent of any amount over fifteen million ($15,000,000) dollars.

64.2.1(d) In the event the **City** terminates a lump sum **Contract** pursuant to this Article 64 within ninety (90) **Days** after registration of the **Contract** with the **Comptroller**, the **Contractor** shall be paid one (1%) percent of the difference between the lump sum bid amount and the total of all payments made pursuant to this Article 64.2.

64.2.2 Unit Price Contracts or Items: On all unit price **Contracts**, or on unit price items in a **Contract**, the **City** will pay the **Contractor** the sum of the amounts described in Articles 64.2.2(a) and 64.2.2(b), less all payments previously made pursuant to this **Contract**:

64.2.2(a) For all completed units, the unit price stated in the **Contract**, and

64.2.2(b) For units that have been ordered but are only partially completed, the **Contractor** will be paid:

64.2.2(b)(i) A pro rata portion of the unit price stated in the **Contract** based upon the percent completion of the unit and

64.2.2(b)(ii) For non-cancelable material and equipment, payment will be made pursuant to Article 64.2.1(b).

64.2.3 Time and Materials Contracts or Items Based on Time and Material Records: On all **Contracts** or items in a **Contract** where payment for the **Work** is based on time and material records, the **Contractor** shall be paid in accordance with Article 26, less all payments previously made pursuant to this **Contract**.

64.2.4 Direct Costs: Direct Costs as used in this Article 64.2 shall mean:

64.2.4(a) The actual purchase price of material and equipment, plus necessary and reasonable delivery costs,

64.2.4(b) The actual cost of labor involved in construction and installation at the **Site**, and

64.2.4(c) The actual cost of necessary bonds and insurance purchased pursuant to requirements of this **Contract** less any amounts that have been or should be refunded by the **Contractor's** sureties or insurance carriers.

64.2.4(d) Direct Costs shall not include overhead.

64.3 In no event shall any payments under this Article 64 exceed the **Contract** price for such items.

64.4 All payments pursuant to Article 64 shall be in the nature of liquidated damages and shall be accepted by the **Contractor** in full satisfaction of all claims against the **City**.

64.5 The **City** may deduct or set off against any sums due and payable pursuant to this Article 64, any deductions authorized by this **Contract** or by **Law** (including but not limited to liquidated damages) and any claims it may have against the **Contractor**. The **City's** exercise of the right to terminate the **Contract** pursuant to this Article 64 shall not impair or otherwise effect the **City's** right to assert any claims it may have against the **Contractor** in a plenary action.

64.6 Where the **Work** covered by the **Contract** has been substantially completed, as determined in writing by the **Commissioner**, termination of the **Work** shall be handled as an omission of **Work** pursuant to Articles 29 and 33, in which case a change order will be issued to reflect an appropriate reduction in the **Contract** sum, or if the amount is determined after final payment, such amount shall be paid by the **Contractor**.

ARTICLE 65. CHOICE OF LAW, CONSENT TO JURISDICTION AND VENUE

65.1 This **Contract** shall be deemed to be executed in the **City** regardless of the domicile of the **Contractor**, and shall be governed by and construed in accordance with the **Laws** of the State of New York and the **Laws** of the United States, where applicable.

65.2 The parties agree that any and all claims asserted against the **City** arising under this **Contract** or related thereto shall be heard and determined in the courts of the State of New York ("New York State Courts") located in the **City** and County of New York. To effect this **Contract** and intent, the **Contractor** agrees:

65.2.1 If the **City** initiates any action against the **Contractor** in Federal court or in a New York State Court, service of process may be made on the **Contractor** either in person, wherever such **Contractor** may be found, or by registered mail addressed to the **Contractor** at its address as set forth in this **Contract**, or to such other address as the **Contractor** may provide to the **City** in writing; and

65.2.2 With respect to any action between the **City** and the **Contractor** in a New York State Court, the **Contractor** hereby expressly waives and relinquishes any rights it might otherwise have:

65.2.2(a) To move to dismiss on grounds of forum non conveniens;

65.2.2(b) To remove to Federal Court; and

65.2.2(c) To move for a change of venue to a New York State Court outside New York County.

65.2.3 With respect to any action brought by the **City** against the **Contractor** in a Federal Court located in the **City**, the **Contractor** expressly waives and relinquishes any right it might otherwise have to move to transfer the action to a Federal Court outside the **City**.

65.2.4 If the **Contractor** commences any action against the **City** in a court located other than in the **City** and County of New York, upon request of the **City**, the **Contractor** shall either consent to a transfer of the action to a New York State Court of competent jurisdiction located in the **City** and County of New York or, if the Court where the action is initially brought will not or cannot transfer the action, the **Contractor** shall consent to dismiss such action without prejudice and may thereafter reinstate the action in a New York State Court of competent jurisdiction in New York County.

65.3 If any provision(s) of this Article 65 is held unenforceable for any reason, each and all other provision(s) shall nevertheless remain in full force and effect.

ARTICLE 66. PARTICIPATION IN AN INTERNATIONAL BOYCOTT

66.1 The **Contractor** agrees that neither the **Contractor** nor any substantially owned affiliated company is participating or shall participate in an international boycott in violation of the provisions of the Federal Export Administration Act of 1979, as amended, or the regulations of the United States Department of Commerce (Commerce Department) promulgated thereunder.

66.2 Upon the final determination by the Commerce Department or any other agency of the United States as to, or conviction of the **Contractor** or a substantially-owned affiliated company thereof for participation in an international boycott in violation of the provisions of the Export Administration Act of 1979, as amended, or the regulations promulgated thereunder, the **Comptroller** may, at his/her option, render forfeit and void this **Contract**.

66.3 The **Contractor** shall comply in all respects, with the provisions of Section 6-114 of the Administrative Code and the rules and regulations issued by the **Comptroller** thereunder.

ARTICLE 67. LOCALLY BASED ENTERPRISE PROGRAM

67.1 This **Contract** is subject to the requirements of Section 6-108.1 of the Administrative Code and regulations promulgated thereunder. No construction contract shall be awarded unless and until these requirements have been complied with in their entirety; however, compliance with this Article 67 is not required if the Agency sets Subcontractor Participation Goals for Minority- and Women-Owned Business Enterprises (M/WBEs).

67.2 Unless specifically waived by the **Commissioner** with the approval of the Division of Economic and Financial Opportunity of the **City** Department of Business Services, if any portion of the **Contract** is subcontracted, not less than ten (10%) percent of the total dollar amount of the **Contract** shall be awarded to locally based enterprises (LBEs); except that where less than ten (10%) percent of the total dollar amount of the **Contract** is subcontracted, such lesser percentage shall be so awarded.

67.3 The **Contractor** shall not require performance and payment bonds from LBE **Subcontractors**.

67.4 If the **Contractor** has indicated prior to award that no **Work** will be subcontracted, no **Work** shall be subcontracted without the prior approval of the **Commissioner**, which shall be granted only if the **Contractor** makes a good faith effort beginning at least six (6) weeks before the **Work** is to be performed to obtain LBE **Subcontractors** to perform the **Work**.

67.5 If the **Contractor** has not identified sufficient LBE **Subcontractors** prior to award, it shall sign a letter of compliance stating that it complies with Section 6-108.1 of the Administrative Code, recognizes that achieving the LBE requirement is a condition of its **Contract**, and shall submit documentation demonstrating its good faith efforts to obtain LBEs. After award, the **Contractor** shall begin to solicit LBE's to perform subcontracted **Work** at least six (6) weeks before the date such **Work** is to be performed and shall demonstrate that a good faith effort has been made to obtain LBEs on each subcontract until it meets the required percentage.

67.6 Failure of the **Contractor** to comply with the requirements of Section 6-108.1 of the Administrative Code and the regulations promulgated thereunder shall constitute a material breach of this **Contract**. Remedy for such breach may include the imposition of any or all of the following sanctions:

67.6.1 Reducing the **Contractor's** compensation by an amount equal to the dollar value of the percentage of the LBE subcontracting requirement not complied with;

67.6.2 Declaring the **Contractor** in default;

67.6.3 If the **Contractor** is an LBE, de-certifying and declaring the **Contractor** ineligible to participate in the LBE program for a period of up to three (3) years.

ARTICLE 68. ANTITRUST

68.1 The **Contractor** hereby assigns, sells, and transfers to the **City** all right, title, and interest in and to any claims and causes of action arising under the antitrust **Laws** of New York State or of the United States relating to the particular goods or services purchased or procured by the **City** under this **Contract**.

ARTICLE 69. MacBRIDE PRINCIPLES PROVISIONS

69.1 Notice To All Prospective **Contractors**:

69.1.1 Local Law No. 34 of 1991 became effective on September 10, 1991 and added Section 6-115.1 of the Administrative Code. The local **Law** provides for certain restrictions on **City Contracts** to express the opposition of the people of the **City** to employment discrimination practices in Northern Ireland to promote freedom of work-place opportunity.

69.1.2 Pursuant to Section 6-115.1, prospective **Contractors** for **Contracts** to provide goods or services involving an expenditure of an amount greater than ten thousand ($10,000.) dollars, or for construction involving an amount greater than fifteen thousand ($15,000.) dollars, are asked to sign a rider in which they covenant and represent, as a material condition of their **Contract**, that any business operations in Northern Ireland conducted by the **Contractor** and any individual or legal entity in which the **Contractor** holds a ten (10%) percent or greater ownership interest in the **Contractor** will be conducted in accordance with the MacBride Principles of nondiscrimination in employment.

69.1.3 Prospective **Contractors** are not required to agree to these conditions. However, in the case of **Contracts** let by competitive sealed bidding, whenever the lowest responsible bidder has not agreed to stipulate to the conditions set forth in this notice and another bidder who has agreed to stipulate to such conditions has submitted a bid within five (5%) percent of the lowest responsible bid for a **Contract** to supply goods, services or contraction of comparable quality, the **Agency** shall refer such bids to the Mayor, the Speaker or other officials, as appropriate, who may determine, in accordance with applicable **Law**, that it is in the best interest of the **City** that the **Contract** be awarded to other than the lowest responsible pursuant to Section 313(b)(2) of the **City** Charter.

69.1.4 In the case of **Contracts** let by other than competitive sealed bidding, if a prospective **Contractor** does not agree to these conditions, no **Agency**, elected official or the **City** Council shall award the **Contract** to that bidder unless the **Agency** seeking to use the goods, services or construction certifies in writing that the **Contract** is necessary for the **Agency** to perform its functions and there is no other responsible **Contractor** who will supply goods, services or construction of comparable quality at a comparable price.

69.2 In accordance with Section 6-115.1 of the Administrative Code, the **Contractor** stipulates that such **Contractor** and any individual or legal entity in which the **Contractor** holds a ten (10%) percent or greater ownership interest in the **Contractor** either:

69.2.1 Have no business operations in Northern Ireland, or

69.2.2 Shall take lawful steps in good faith to conduct any business operations they have in Northern Ireland in accordance with the MacBride Principles, and shall permit independent monitoring of their compliance with such principles.

69.3 For purposes of this Article, the following terms shall have the following meanings:

69.3.1 "MacBride Principles" shall mean those principles relating to nondiscrimination in employment and freedom of work-place opportunity which require employers doing business in Northern Ireland to:

69.3.1(a) increase the representation of individuals from under-represented religious groups in the workforce, including managerial, supervisory, administrative, clerical and technical jobs;

69.3.1(b) take steps to promote adequate security for the protection of employees from under-represented religious groups both at the work-place and while traveling to and from **Work**;

69.3.1(c) ban provocative religious or political emblems from the workplace;

69.3.1(d) publicly advertise all job openings and make special recruitment efforts to attract applicants from under-represented religious groups;

69.3.1(e) establish layoff, recall, and termination procedures which do not in practice favor a particular religious group;

69.3.1(f) abolish all job reservations, apprenticeship restrictions and different employment criteria which discriminate on the basis of religion;

69.3.1(g) develop training programs that will prepare substantial numbers of current employees from under-represented religious groups for skilled jobs, including the expansion of existing programs and the creation of new programs to train, upgrade, and improve the skills of workers from under-represented religious groups;

69.3.1(h) establish procedures to asses, identify, and actively recruit employees from under-represented religious groups with potential for further advancement; and

69.3.1(i) appoint a senior management staff member to oversee affirmative action efforts and develop a timetable to ensure their full implementation.

69.4 The **Contractor** agrees that the covenants and representations in Article 69.2 are material conditions to this **Contract**. In the event the **Agency** receives information that the **Contractor** who made the stipulation required by this Article 69 is in violation thereof, the **Agency** shall review such information and give the **Contractor** an opportunity to respond. If the **Agency** finds that a violation has occurred, the **Agency** shall have the right to declare the **Contractor** in default in default and/or terminate this **Contract** for cause and procure supplies, services or **Work** from another source in the manner the **Agency** deems proper. In the event of such termination, the **Contractor** shall pay to the **Agency**, or the **Agency** in its sole discretion may withhold from any amounts otherwise payable to the **Contractor**, the difference between the **Contract** price for the uncompleted portion of this **Contract** and the cost to the **Agency** of completing performance of this **Contract** either itself or by engaging another **Contractor** or **Contractors**. In the case of a requirement **Contract**, the **Contractor** shall be liable for such difference in price for the entire amount of supplies required by the **Agency** for the uncompleted term of **Contractor's Contract**. In the case of a construction **Contract**, the **Agency** shall also have the right to hold the **Contractor** in partial or total default in accordance with the default provisions of this **Contract**, and/or may seek debarment or suspension of the **Contractor**. The rights and remedies of the **Agency** hereunder shall be in addition to, and not in lieu of, any rights and remedies the **Agency** has pursuant to this **Contract** or by operation of **Law**.

ARTICLE 70. ELECTRONIC FILING/NYC DEVELOPMENT HUB

70.1 The **Contractor** shall electronically file all alteration type-2 and alteration type-3 applications via the New York City Development Hub Web site, except applications for the following types of minor alterations: enlargements, curb cuts, legalizations, fire alarms, builders pavement plans, and jobs filed on Landmark Preservation Commission calendared properties. All such filings must be professionally certified. Information about electronic filing via the New York City Development Hub is available on the **City** Department of Buildings Web site at www.nyc.gov/buildings.

ARTICLE 71. PROHIBITION OF TROPICAL HARDWOODS

71.1 Tropical hardwoods, as defined in Section 165 of the New York State Finance Law (Finance Law), shall not be utilized in the performance of this **Contract** except as expressly permitted by Section 165 of the Finance Law.

ARTICLE 72. CONFLICTS OF INTEREST

72.1 Section 2604 of the **City** Charter and other related provisions of the **City** Charter, the Administrative Code, and the Penal Law are applicable under the terms of this **Contract** in relation to conflicts of interest and shall be extended to **Subcontractors** authorized to perform **Work**, labor and services pursuant to this **Contract** and further, it shall be the duty and responsibility of the **Contractor** to so inform its respective **Subcontractors**. Notice is hereby given that, under certain circumstances, penalties may be invoked against the donor as well as the recipient of any form of valuable gift.

ARTICLE 73. MERGER CLAUSE

73.1 The written **Contract** herein, contains all the terms and conditions agreed upon by the parties hereto, and no other agreement, oral or otherwise, regarding the subject matter of this **Contract** shall be deemed to exist or to bind any of the parties hereto, or to vary any of the terms contained herein.

ARTICLE 74. STATEMENT OF WORK

74.1 The **Contractor** shall furnish all labor and materials and perform all **Work** in strict accordance with the **Specifications** and **Addenda** thereto, numbered as shown in Schedule A.

ARTICLE 75. COMPENSATION TO BE PAID TO CONTRACTOR

75.1 The **City** will pay and the **Contractor** will accept in full consideration for the performance of the **Contract**, subject to additions and deductions as provided herein, the total sum shown in Schedule A, this said sum being the amount at which the **Contract** was awarded to the **Contractor** at a public letting thereof, based upon the **Contractor's** bid for the **Contract**.

ARTICLE 76. ELECTRONIC FUNDS TRANSFER

76.1 In accordance with Section 6-107.1 of the Administrative Code, the **Contractor** agrees to accept payments under this **Contract** from the **City** by electronic funds transfer (EFT). An EFT is any

transfer of funds, other than a transaction originated by check, draft or similar paper instrument, which is initiated through an electronic terminal, telephonic instrument or computer or magnetic tape so as to order, instruct or authorize a financial institution to debit or credit an account. Prior to the first payment made under this **Contract**, the **Contractor** shall designate one financial institution or other authorized payment agent and shall complete the attached "EFT Vendor Payment Enrollment Form" in order to provide the Commissioner of the **City** Department of Finance with information necessary for the **Contractor** to receive electronic funds transfer payments through a designated financial institution or authorized payment agent. The crediting of the amount of a payment to the appropriate account on the books of a financial institution or other authorized payment agent designated by the **Contractor** shall constitute full satisfaction by the **City** for the amount of the payment under this **Contract**. The account information supplied by the **Contractor** to facilitate the electronic funds transfer shall remain confidential to the fullest extent provided by **Law**.

76.2 The **Commissioner** may waive the application of the requirements of this Article 76 to payments on contracts entered into pursuant to Section 315 of the **City** Charter. In addition, the Commissioner of the Department of Finance and the Comptroller may jointly issue standards pursuant to which the **Agency** may waive the requirements of this Article 76 for payments in the following circumstances: (i) for individuals or classes of individuals for whom compliance imposes a hardship; (ii) for classifications or types of checks; or (iii) in other circumstances as may be necessary in the interest of the **City**.

ARTICLE 77. RECORDS RETENTION

77.1 The **Contractor** agrees to retain all books, records, and other documents relevant to this **Contract** for six years after the final payment or termination of this **Contract**, whichever is later. **City**, state, and federal auditors and any other persons duly authorized by the **City** shall have full access to and the right to examine any such books, records, and other documents during the retention period.

ARTICLE 78. EXAMINATION AND VIEWING OF SITE, CONSIDERATION OF OTHER SOURCES OF INFORMATION AND CHANGED SITE CONDITIONS

78.1 Pre-Bidding (Investigation) Viewing of Site – Bidders must carefully view and examine the **Site** of the proposed **Work**, as well as its adjacent area, and seek other usual sources of information, for they will be conclusively presumed to have full knowledge of any and all conditions and hazards on, about or above the **Site** relating to or affecting in any way the performance of the **Work** to be done under the **Contract** that were or should have been known by a reasonably prudent bidder. To arrange a date for visiting the **Site**, bidders are to contact the **Agency** contact person specified in the bid documents.

78.2 Should the **Contractor** encounter during the progress of the Work site conditions or environmental hazards at the **Site** materially differing from any shown on the **Contract Drawings** or indicated in the **Specifications** or such conditions or environmental hazards as could not reasonably have been anticipated by the **Contractor**, which conditions or hazards will materially affect the cost of the **Work** to be done under the **Contract**, the attention of the **Commissioner** must be called immediately to such conditions or hazards before they are disturbed. The **Commissioner** shall thereupon promptly investigate the conditions or hazards. If the **Commissioner** finds that they do so materially differ, and that they could not have been reasonably anticipated by the **Contractor**, the **Contract** may be modified with the **Commissioner**'s written approval.

ARTICLE 79. PARTICIPATION BY MINORITY-OWNED AND WOMEN-OWNED BUSINESS ENTERPRISES IN CITY PROCUREMENT

NOTICE TO ALL PROSPECTIVE CONTRACTORS

ARTICLE I. M/WBE PROGRAM

Local Law No. 129 of 2005 added and Local Law 1 of 2013 amended Section 6-129 of the Administrative Code of the City of New York (hereinafter "Section 6-129"). Section 6-129 establishes the program for participation in City procurement ("M/WBE Program") by minority- owned business enterprises ("MBEs") and women-owned business enterprises ("WBEs"), certified in accordance with Section 1304 of the New York City Charter. As stated in Section 6-129, the intent of the program is to address the impact of discrimination on the City's procurement process, and to promote the public interest in avoiding fraud and favoritism in the procurement process, increasing competition for City business, and lowering contract costs. The contract provisions contained herein are pursuant to Section 6-129, and the rules of the Department of Small Business Services ("DSBS") promulgated thereunder.

If this Contract is subject to the M/WBE Program established by Section 6-129, the specific requirements of MBE and/or WBE participation for this Contract are set forth in Schedule B of the Contract (entitled the "M/WBE Utilization Plan"), and are detailed below. The Contractor must comply with all applicable MBE and WBE requirements for this Contract.

All provisions of Section 6-129 are hereby incorporated in the Contract by reference and all terms used herein that are not defined herein shall have the meanings given such terms in Section 6-129. Article I, Part A, below, sets forth provisions related to the participation goals for construction, standard and professional services contracts. Article I, Part B, below, sets forth miscellaneous provisions related to the M/WBE Program.

PART A

PARTICIPATION GOALS FOR CONSTRUCTION, STANDARD AND PROFESSIONAL SERVICES CONTRACTS OR TASK ORDERS

1. The **MBE and/or WBE Participation Goals** established for this Contract or Task Orders issued pursuant to this Contract, ("**Participation Goals**"), as applicable, are set forth on Schedule B, Part I to this Contract (see Page 1, line 1 Total Participation Goals) or will be set forth on Schedule B, Part I to Task Orders issued pursuant to this Contract, as applicable.

The **Participation Goals** represent a percentage of the total dollar value of the Contract or Task Order, as applicable, that may be achieved by awarding subcontracts to firms certified with New York City Department of Small Business Services as MBEs and/or WBEs, and/or by crediting the participation of prime contractors and/or qualified joint ventures as provided in Section 3 below, unless the goals have been waived or modified by Agency in accordance with Section 6-129 and Part A, Sections 10 and 11 below, respectively.

2. If **Participation Goals** have been established for this Contract or Task Orders issued pursuant to this Contract, Contractor agrees or shall agree as a material term of the Contract that Contractor shall be subject to the **Participation Goals**, unless the goals are waived or modified by Agency in accordance with Section 6-129 and Part A, Sections 10 and 11 below, respectively.

3. If **Participation Goals** have been established for this Contract or Task Order issued pursuant to this Contract, a Contractor that is an MBE and/or WBE shall be permitted to count its own participation toward fulfillment of the relevant **Participation Goal**, provided that in accordance with Section 6-129 the value of Contractor's participation shall be determined by subtracting from the total value of the Contract or Task Order, as applicable, any amounts that the Contractor pays to direct subcontractors (as defined in Section 6-129(c)(13)), and provided further that a Contractor that is certified as both an MBE and a WBE may count its own participation either toward the goal for MBEs or the goal for WBEs, but not both.

A Contractor that is a qualified joint venture (as defined in Section 6-129(c)(30)) shall be permitted to count a percentage of its own participation toward fulfillment of the relevant **Participation Goal**. In accordance with Section 6-129, the value of Contractor's participation shall be determined by subtracting from the total value of the Contract or Task Order, as applicable, any amounts that Contractor pays to direct subcontractors, and then multiplying the remainder by the percentage to be applied to total profit to determine the amount to which an MBE or WBE is entitled pursuant to the joint venture agreement, provided that where a participant in a joint venture is certified as both an MBE and a WBE, such amount shall be counted either toward the goal for MBEs or the goal for WBEs, but not both.

4. A. If **Participation Goals** have been established for this Contract, a prospective contractor shall be required to submit with its bid or proposal, as applicable, a completed Schedule B, M/WBE Utilization Plan, Part II (see Pages 2-4) indicating: (a) whether the contractor is an MBE or WBE, or qualified joint venture; (b) the percentage of work it intends to award to direct subcontractors; and (c) in cases where the contractor intends to award direct subcontracts, a description of the type and dollar value of work designated for participation by MBEs and/or WBEs, and the time frames in which such work is scheduled to begin and end. In the event that this M/WBE Utilization Plan indicates that the bidder or proposer, as applicable, does not intend to meet the **Participation Goals**, the bid or proposal, as applicable, shall be deemed non-responsive, unless Agency has granted the bidder or proposer, as applicable, a pre- award waiver of the Participation Goals in accordance with Section 6-129 and Part A, Section 10 below.

B. (i) If this Contract is for a master services agreement or other requirements type contract that will result in the issuance of Task Orders that will be individually registered ("Master Services Agreement") and is subject to M/WBE **Participation Goals**, a prospective contractor shall be required to submit with its bid or proposal, as applicable, a completed Schedule B, M/WBE Participation Requirements for Master Services Agreements That Will Require Individually Registered Task Orders, Part II (page 2) indicating the prospective contractor's certification and required affirmations to make all reasonable good faith efforts to meet participation goals established on each individual Task Order issued pursuant to this Contract, or if a partial waiver is obtained or such goals are modified by the Agency, to meet the modified **Participation Goals** by soliciting and obtaining the participation of certified MBE and/or WBE firms. In the event that the Schedule B indicates that the bidder or proposer, as applicable, does not intend to meet the **Participation Goals** that may be established on Task Orders issued pursuant to this Contract, the bid or proposal, as applicable, shall be deemed nonresponsive.

(ii) **Participation Goals** on a Master Services Agreement will be established for individual Task Orders issued after the Master Services Agreement is awarded. If **Participation Goals** have been established on a Task Order, a contractor shall be required to submit a Schedule B – M/WBE Utilization Plan For Independently Registered Task Orders That Are Issued Pursuant to Master Services Agreements, Part II (see Pages 2-4) indicating: (a) whether the contractor is an MBE or WBE, or qualified joint venture; (b) the percentage of work it intends to award to direct subcontractors; and (c) in cases where the contractor intends to award direct subcontracts, a description of the type and dollar value of work designated for participation by MBEs and/or WBEs, and the time frames in which such work is scheduled to begin and end. The contractor must engage in good faith efforts to meet the **Participation Goals** as established for the Task Order unless Agency has granted the contractor a pre-award waiver of the Participation Goals in accordance with Section 6-129 and Part A, Section 10 below.

C. THE BIDDER/PROPOSER MUST COMPLETE THE SCHEDULE B INCLUDED HEREIN (SCHEDULE B, PART II). A SCHEDULE B SUBMITTED BY THE BIDDER/PROPOSER WHICH DOES NOT INCLUDE THE VENDOR CERTIFICATION AND REQUIRED AFFIRMATIONS (SEE SECTION V OF PART II) WILL BE DEEMED TO BE NON-RESPONSIVE, UNLESS A FULL WAIVER OF THE PARTICIPATION GOALS IS GRANTED (SCHEDULE B, PART III). IN THE EVENT THAT THE CITY DETERMINES THAT THE BIDDER/PROPOSER HAS SUBMITTED A SCHEDULE B WHERE THE VENDOR CERTIFICATION AND REQUIRED AFFIRMATIONS ARE COMPLETED BUT OTHER ASPECTS OF THE SCHEDULE B ARE NOT COMPLETE, OR CONTAIN A COPY OR COMPUTATION ERROR THAT IS AT ODDS WITH THE VENDOR CERTIFICATION AND AFFIRMATIONS, THE BIDDER/PROPOSER WILL BE NOTIFIED BY THE AGENCY AND WILL BE GIVEN FOUR (4) CALENDAR DAYS FROM RECEIPT OF NOTIFICATION TO CURE THE SPECIFIED DEFICIENCIES AND RETURN A COMPLETED SCHEDULE B TO THE AGENCY. FAILURE TO DO SO WILL RESULT IN A DETERMINATION THAT THE BID/PROPOSAL IS NON-RESPONSIVE. RECEIPT OF NOTIFICATION IS DEFINED AS THE DATE NOTICE IS E-MAILED OR FAXED (IF THE BIDDER/PROPOSER HAS PROVIDED AN E-MAIL ADDRESS OR FAX NUMBER), OR NO LATER THAN FIVE (5) CALENDAR DAYS FROM THE DATE OF MAILING OR UPON DELIVERY, IF DELIVERED.

5. Where an **M/WBE** Utilization Plan has been submitted, the Contractor shall, within 30 days of issuance by Agency of a notice to proceed, submit a list of proposed persons or entities to which it intends to award subcontracts within the subsequent 12 months. In the case of multiyear contracts, such list shall also be submitted every year thereafter. The Agency may also require the Contractor to report periodically about the contracts awarded by its direct subcontractors to indirect subcontractors (as defined in Section 6-129(c)(22)). **PLEASE NOTE: If this Contract is a public works project subject to GML §101(5) (i.e., a contract valued at or below $3M for projects in New York City) or if the Contract is subject to a project labor agreement in accordance with Labor Law §222, and the bidder is required to identify at the time of bid submission its intended subcontractors for the Wicks trades (plumbing and gas fitting; steam heating, hot water heating, ventilating and air conditioning (HVAC); and electric wiring), the Contractor must identify all those to which it intends to award construction subcontracts for any portion of the Wicks trade work at the time of bid submission, regardless of what point in the life of the contract such subcontracts will occur. In identifying intended subcontractors in the bid submission, bidders may satisfy any Participation Goals established for this Contract by proposing one or more subcontractors that are MBEs and/or WBEs for any portion of the Wicks trade work**. In the event that the Contractor's selection of a subcontractor is disapproved, the Contractor shall have a reasonable time to propose alternate subcontractors.

6. MBE and WBE firms must be certified by DSBS in order for the Contractor to credit such firms' participation toward the attainment of the **Participation Goals**. Such certification must occur prior to the

firms' commencement of work. A list of MBE and WBE firms may be obtained from the DSBS website at www.nyc.gov/buycertified, by emailing DSBS at buyer@sbs.nyc.gov, by calling (212) 513-6356, or by visiting or writing DSBS at 110 William St., New York, New York, 10038, 7th floor. Eligible firms that have not yet been certified may contact DSBS in order to seek certification by visiting www.nyc.gov/getcertified, emailing MWBE@sbs.nyc.gov, or calling the DSBS certification helpline at (212) 513-6311. A firm that is certified as both an MBE and a WBE may be counted either toward the goal for MBEs or the goal for WBEs, but not both. No credit shall be given for participation by a graduate MBE or graduate WBE, as defined in Section 6-129(c)(20).

7. Where an **M/WBE** Utilization Plan has been submitted, the Contractor shall, with each voucher for payment, and/or periodically as Agency may require, submit statements, certified under penalty of perjury, which shall include, but not be limited to,: the total amount the Contractor paid to its direct subcontractors, and, where applicable pursuant to Section 6-129(j), the total amount direct subcontractors paid to indirect subcontractors; the names, addresses and contact numbers of each MBE or WBE hired as a subcontractor by the Contractor, and, where applicable, hired by any of the Contractor's direct subcontractors; and the dates and amounts paid to each MBE or WBE. The Contractor shall also submit, along with its voucher for final payment: the total amount it paid to subcontractors, and, where applicable pursuant to Section 6-129(j), the total amount its direct subcontractors paid directly to their indirect subcontractors; and a final list, certified under penalty of perjury, which shall include the name, address and contact information of each subcontractor that is an MBE or WBE, the work performed by, and the dates and amounts paid to each.

8. If payments made to, or work performed by, MBEs or WBEs are less than the amount specified in the Contractor's **M/WBE** Utilization Plan, Agency shall take appropriate action, in accordance with Section 6-129 and Article II below, unless the Contractor has obtained a modification of its **M/WBE** Utilization Plan in accordance with Section 6-129 and Part A, Section 11 below.

9. Where an **M/WBE** Utilization Plan has been submitted, and the Contractor requests a change order the value of which exceeds the greater of 10 percent of the Contract or Task Order, as applicable, or $500,000, Agency shall review the scope of work for the Contract or Task Order, as applicable, and the scale and types of work involved in the change order, and determine whether the **Participation Goals** should be modified.

10. Pre-award waiver of the **Participation Goals**. (a) A bidder or proposer, or contractor with respect to a Task Order, may seek a pre-award full or partial waiver of the **Participation Goals** in accordance with Section 6-129, which requests that Agency change one or more **Participation Goals** on the grounds that the **Participation Goals** are unreasonable in light of the availability of certified firms to perform the services required, or by demonstrating that it has legitimate business reasons for proposing a lower level of subcontracting in its M/WBE Utilization Plan.

(b) To apply for a full or partial waiver of the **Participation Goals**, a bidder, proposer, or contractor, as applicable, must complete Part III (Page 5) of Schedule B and submit such request no later than seven (7) calendar days prior to the date and time the bids, proposals, or Task Orders are due, in writing to the Agency by email at poped@ddc.nyc.gov or via facsimile at (718) 391-1886. Bidders, proposers, or contractors, as applicable, who have submitted requests will receive an Agency response by no later than two (2) calendar days prior to the due date for bids, proposals, or Task Orders; provided, however, that if that date would fall on a weekend or holiday, an Agency response will be provided by close-of-business on the business day before such weekend or holiday date.

(c) If the Agency determines that the **Participation Goals** are unreasonable in light of the availability of certified firms to perform the services required, it shall revise the solicitation and extend the deadline for bids and proposals, or revise the Task Order, as applicable.

(d) Agency may grant a full or partial waiver of the **Participation Goals** to a bidder, proposer or contractor, as applicable, who demonstrates—before submission of the bid, proposal or Task Order, as applicable—that it has legitimate business reasons for proposing the level of subcontracting in its **M/WBE** Utilization Plan. In making its determination, Agency shall consider factors that shall include, but not be limited to, whether the bidder, proposer or contractor, as applicable, has the capacity and the bona fide intention to perform the Contract without any subcontracting, or to perform the Contract without awarding the amount of subcontracts represented by the **Participation Goals**. In making such determination, Agency may consider whether the **M/WBE** Utilization Plan is consistent with past subcontracting practices of the bidder, proposer or contractor, as applicable, whether the bidder, proposer or contractor, as applicable, has made efforts to form a joint venture with a certified firm, and whether the bidder, proposer, or contractor, as applicable, has made good faith efforts to identify other portions of the Contract that it intends to subcontract.

11. Modification of **M/WBE** Utilization Plan. (a) A Contractor may request a modification of its **M/WBE** Utilization Plan after award of this Contract. **PLEASE NOTE: If this Contract is a public works project subject to GML §101(5) (i.e., a contract valued at or below $3M for projects in New York City) or if the Contract is subject to a project labor agreement in accordance with Labor Law §222, and the bidder is required to identify at the time of bid submission its intended subcontractors for the Wicks trades (plumbing and gas fitting; steam heating, hot water heating, ventilating and air conditioning (HVAC); and electric wiring), the Contractor may request a Modification of its M/WBE Utilization Plan as part of its bid submission**. The Agency may grant a request for Modification of a Contractor's **M/WBE** Utilization Plan if it determines that the Contractor has established, with appropriate documentary and other evidence, that it made reasonable, good faith efforts to meet the **Participation Goals.** In making such determination, Agency shall consider evidence of the following efforts, as applicable, along with any other relevant factors:

(i) The Contractor advertised opportunities to participate in the Contract, where appropriate, in general circulation media, trade and professional association publications and small business media, and publications of minority and women's business organizations;
(ii) The Contractor provided notice of specific opportunities to participate in the Contract, in a timely manner, to minority and women's business organizations;
(iii) The Contractor sent written notices, by certified mail or facsimile, in a timely manner, to advise MBEs or WBEs that their interest in the Contract was solicited;
(iv) The Contractor made efforts to identify portions of the work that could be substituted for portions originally designated for participation by MBEs and/or WBEs in the M/WBE Utilization Plan, and for which the Contractor claims an inability to retain MBEs or WBEs;
(v) The Contractor held meetings with MBEs and/or WBEs prior to the date their bids or proposals were due, for the purpose of explaining in detail the scope and requirements of the work for which their bids or proposals were solicited;
(vi) The Contractor made efforts to negotiate with MBEs and/or WBEs as relevant to perform specific subcontracts, or act as suppliers or service providers;
(vii) Timely written requests for assistance made by the Contractor to Agency's M/WBE liaison officer and to DSBS;
(viii) Description of how recommendations made by DSBS and Agency were acted upon and an explanation of why action upon such recommendations did not lead to the desired level of participation of MBEs and/or WBEs.

Agency's M/WBE officer shall provide written notice to the Contractor of the determination.

(b) The Agency may modify the **Participation Goals** when the scope of the work has been changed by the Agency in a manner that affects the scale and types of work that the Contractor indicated in its **M/WBE** Utilization Plan would be awarded to subcontractors.

12. If this Contract is for an indefinite quantity of construction, standard or professional services or is a requirements type contract and the Contractor has submitted an **M/WBE** Utilization Plan and has committed to subcontract work to MBEs and/or WBEs in order to meet the **Participation Goals**, the Contractor will not be deemed in violation of the M/WBE Program requirements for this Contract with regard to any work which was intended to be subcontracted to an MBE and/or WBE to the extent that the Agency has determined that such work is not needed.

13. If **Participation Goals** have been established for this Contract or a Task Order issued pursuant to this Contract, at least once annually during the term of the Contract or Task Order, as applicable, Agency shall review the Contractor's progress toward attainment of its M/WBE Utilization Plan, including but not limited to, by reviewing the percentage of work the Contractor has actually awarded to MBE and/or WBE subcontractors and the payments the Contractor made to such subcontractors.

14. If **Participation Goals** have been established for this Contract or a Task Order issued pursuant to this Contract, Agency shall evaluate and assess the Contractor's performance in meeting those goals, and such evaluation and assessment shall become part of the Contractor's overall contract performance evaluation.

PART B: MISCELLANEOUS

1. The Contractor shall take notice that, if this solicitation requires the establishment of an **M/WBE** Utilization Plan, the resulting contract may be audited by DSBS to determine compliance with Section 6-129. See §6-129(e)(10). Furthermore, such resulting contract may also be examined by the City's Comptroller to assess compliance with the **M/WBE** Utilization Plan.

2. Pursuant to DSBS rules, construction contracts that include a requirement for an **M/WBE** Utilization Plan shall not be subject to the law governing Locally Based Enterprises set forth in Section 6-108.1 of the Administrative Code of the City of New York.

3. DSBS is available to assist contractors and potential contractors in determining the availability of MBEs and/or WBEs to participate as subcontractors, and in identifying opportunities that are appropriate for participation by MBEs and/or WBEs in contracts.

4. Prospective contractors are encouraged to enter into qualified joint venture agreements with MBEs and/or WBEs as defined by Section 6-129(c)(30).

5. By submitting a bid or proposal the Contractor hereby acknowledges its understanding of the M/WBE Program requirements set forth herein and the pertinent provisions of Section 6-129, and any rules promulgated thereunder, and if awarded this Contract, the Contractor hereby agrees to comply with the M/WBE Program requirements of this Contract and pertinent provisions of Section 6-129, and any rules promulgated thereunder, all of which shall be deemed to be material terms of this Contract. The Contractor hereby agrees to make all reasonable, good faith efforts to solicit and obtain the participation of MBEs and/or WBEs to meet the required **Participation Goals**.

ARTICLE II. ENFORCEMENT

1. If Agency determines that a bidder or proposer, as applicable, has, in relation to this procurement, violated Section 6-129 or the DSBS rules promulgated pursuant to Section 6-129, Agency may disqualify such bidder or proposer, as applicable, from competing for this Contract and the Agency may revoke such bidder's or proposer's prequalification status, if applicable.

2. Whenever Agency believes that the Contractor or a subcontractor is not in compliance with Section 6-129 or the DSBS rules promulgated pursuant to Section 6-129, or any provision of this Contract that implements Section 6-129, including, but not limited to any **M/WBE** Utilization Plan, Agency shall send a written notice to the Contractor describing the alleged noncompliance and offering the Contractor an opportunity to be heard. Agency shall then conduct an investigation to determine whether such Contractor or subcontractor is in compliance.

3. In the event that the Contractor has been found to have violated Section 6-129, the DSBS rules promulgated pursuant to Section 6-129, or any provision of this Contract that implements Section 6-129, including, but not limited to, any **M/WBE** Utilization Plan, Agency may determine that one of the following actions should be taken:

(a) entering into an agreement with the Contractor allowing the Contractor to cure the violation;
(b) revoking the Contractor's pre-qualification to bid or make proposals for future contracts;
(c) making a finding that the Contractor is in default of the Contract;
(d) terminating the Contract;
(e) declaring the Contractor to be in breach of Contract;
(f) withholding payment or reimbursement;
(g) determining not to renew the Contract;
(h) assessing actual and consequential damages;
(i) assessing liquidated damages or reducing fees, provided that liquidated damages may be based on amounts representing costs of delays in carrying out the purposes of the M/WBE Program, or in meeting the purposes of the Contract, the costs of meeting utilization goals through additional procurements, the administrative costs of investigation and enforcement, or other factors set forth in the Contract;
(j) exercising rights under the Contract to procure goods, services or construction from another contractor and charge the cost of such contract to the Contractor that has been found to be in noncompliance; or
(k) taking any other appropriate remedy.

4. If an **M/WBE** Utilization Plan has been submitted, and pursuant to this Article II, Section 3, the Contractor has been found to have failed to fulfill its **Participation Goals** contained in its **M/WBE** Utilization Plan or the **Participation Goals** as modified by Agency pursuant to Article I, Part A, Section 11, Agency may assess liquidated damages in the amount of ten percent (10%) of the difference between the dollar amount of work required to be awarded to MBE and/or WBE firms to meet the **Participation Goals** and the dollar amount the Contractor actually awarded and paid, and/or credited, to MBE and/or WBE firms. In view of the difficulty of accurately ascertaining the loss which the City will suffer by reason of Contractor's failure to meet the **Participation Goals**, the foregoing amount is hereby fixed and agreed as the liquidated damages that the City will suffer by reason of such failure, and not as a penalty. Agency may deduct and retain out of any monies which may become due under this Contract the amount of any such liquidated damages; and in case the amount which may become due under this Contract shall be less than the amount of liquidated damages suffered by the City, the Contractor shall be liable to pay the difference.

5. Whenever Agency has reason to believe that an MBE and/or WBE is not qualified for certification, or is participating in a contract in a manner that does not serve a commercially useful function (as defined in Section 6-129(c)(8)), or has violated any provision of Section 6- 129, Agency shall notify the Commissioner of DSBS who shall determine whether the certification of such business enterprise should be revoked.

6. Statements made in any instrument submitted to Agency pursuant to Section 6-129 shall be submitted under penalty of perjury and any false or misleading statement or omission shall be grounds for the application of any applicable criminal and/or civil penalties for perjury. The making of a false or fraudulent statement by an MBE and/or WBE in any instrument submitted pursuant to Section 6-129 shall, in addition, be grounds for revocation of its certification.

7. The Contractor's record in implementing its **M/WBE** Utilization Plan shall be a factor in the evaluation of its performance. Whenever Agency determines that a Contractor's compliance with an **M/WBE** Utilization Plan has been unsatisfactory, Agency shall, after consultation with the City Chief Procurement Officer, file an advice of caution form for inclusion in VENDEX as caution data.

IN WITNESS WHEREOF, the Commissioner, on behalf of the City of New York, and the Contractor, have executed this agreement in quadruplicate, two parts of which are to remain with the Commissioner, another to be filed with the Comptroller of the City, and the fourth to be delivered to the Contractor.

THE CITY OF NEW YORK

By:_____
Commissioner

CONTRACTOR:

By:_____
(Member of Firm or Officer of Corporation)

Title:_____

(Where Contractor is a Corporation, add):
Attest:

_____
Secretary

(Seal)

_____

DocuSign Envelope ID: 252CE18E-2379-4ADB-97EB-9FFBFD5FF41F

CONTRACT SIGNATURE PAGE

This Contract is entered by and between the City of New York ("City"), acting by and through the **DEPARTMENT OF DESIGN AND CONSTRUCTION**, and **NYCC JPL JV** ("Contractor").

This Contract consists of this contract signature page as well as the following documents ("Contract Documents") which are located in the Documents tab of the PASSPort record titled **85021B0117-SANDRESPC**.

1. **(Question answer) - Bid Bond.pdf - May 16 2022 5:15PM**
2. **(Question answer) - JV Letter.pdf - May 16 2022 12:20PM**
3. **(Question answer) - NYCC JPL JV Qualifications.pdf - May 16 2022 12:20PM**
4. **Addendum 1: SANDRESPC_Pre-Bid Conference Presentation and Sign-in List - May 16 2022 12:20PM**
5. **Addendum 2 SANDRESPC VOLUME 2 - May 16 2022 12:20PM**
6. **Addendum 3: 2019_05_15_PC Geotech Report_Rev 2019_06_03 S&S - May 16 2022 12:20PM**
7. **Addendum 3: 2020_02_11_Hager-Richter_Crosshole Seismic Tomo - Report - May 16 2022 12:20PM**
8. **Addendum 3: 2020_IG Building Geotech - May 16 2022 12:20PM**
9. **Addendum 3: 2020_M-27 Alternative Interceptor Route_Geotech Report S&S - Add 3 - May 16 2022 12:20PM**
10. **Appendix A Document: 2019.07.25 Con Edison 20th Street North IG Test Pit #1_IMG_2019 - May 16 2022 12:20PM**
11. **Appendix A Document: 2019.07.25 Con Edison 20th Street North IG Test Pit #1_Inspecto - May 16 2022 12:20PM**
12. **Appendix A Document: 2019.07.25 Con Edison 20th Street North IG Test Pit #1_North IG - May 16 2022 12:20PM**
13. **Appendix A Document: 2019.07.25 Con Edison 20th Street North IG Test Pit #1_Survey R - May 16 2022 12:20PM**
14. **Appendix A Document: 2019.08.26 Con Edison 20th Street North IG Test Pit #2_IMG_2754 - May 16 2022 12:20PM**
15. **Appendix A Document: 2019.08.26 Con Edison 20th Street North IG Test Pit #2_IMG_2755 - May 16 2022 12:20PM**
16. **Appendix A Document: 2019.08.26 Con Edison 20th Street North IG Test Pit #2_IMG_2758 - May 16 2022 12:20PM**
17. **Appendix A Document: 2019.08.26 Con Edison 20th Street North IG Test Pit #2_Sketch T - May 16 2022 12:20PM**
18. **Appendix A Document: Alt & Improve to outlet and sewer in Jackson St and new sewer i - May 16 2022 12:20PM**
19. **Appendix A Document: Alt & Improve to sewer in 18th St and Ave C - May 16 2022 12:20PM**
20. **Appendix A Document: Contract 3 N Branch Int Sewer Ave C - E20th St to FDR, P&P 3 of - May 16 2022 12:20PM**
21. **Appendix A Document: Contract 4 S Branch Int E Side Baruch Houses Delancey to E Hous - May 16 2022 12:20PM**
22. **Appendix A Document: Contract 4 S Branch Int sewer E Side Cast Iron Lined tunnel det - May 16 2022 12:20PM**
23. **Appendix A Document: ESCR M-27 GeoTech Site Observation Report 2020.01.24 - May 16 2022 12:20PM**
24. **Appendix A Document: ESCR Manhole and Regulator Structural Inspection Final Report_2 - May 16 2022 12:20PM**
25. **Appendix A Document: For Rehab of Existing Combined Brick Sewers in Henry St, Boroug - May 16 2022 12:20PM**

DocuSign Envelope ID: 252CE18E-2379-4ADB-97EB-9FFBFD5FF41F

26. **Appendix A Document: Gouverneur Slip E and W Sides Btwn South & Water St with Altera - May 16 2022 12:20PM**
27. **Appendix A Document: Hager-Richter_Crosshole Seismic Tomo - Report February 2020 - May 16 2022 12:20PM**
28. **Appendix A Document: North Branch Intercepting Sewer Reg M38 Marginal St N of 20th S - May 16 2022 12:20PM**
29. **Appendix A Document: North Branch Intercepting Sewer Typical Intercepting Sewers, Se - May 16 2022 12:20PM**
30. **Appendix A Document: NYCDOT MicrofilmID BIN 2-24003-9, Roll H44, Frame 035 Williamsb - May 16 2022 12:20PM**
31. **Appendix A Document: Reconstruction of Sewer in E Houston St from Columbia St to Goe - May 16 2022 12:20PM**
32. **Appendix A Document: Sewers in Lewis St btwn Broome and Stanton St Sheet 207 - May 16 2022 12:20PM**
33. **Appendix A Document: Structural Ref Contract 3 N Branch Intercepting Sewer MH 1A, 2 - May 16 2022 12:20PM**
34. **Appendix A Document: Structural Ref Contract 4 S Branch Intercepting Sewer E Side MH - May 16 2022 12:20PM**
35. **Appendix A Document: Survey_Area A0 - Sheets 1-6 (Signed and Sealed) - May 16 2022 12:20PM**
36. **Appendix A Document: Survey_Area A0 - Sheets 7-13 (Signed and Sealed) - May 16 2022 12:20PM**
37. **Appendix A Document: Survey_Area A1 - Revised Sheets - Part 1 - May 16 2022 12:20PM**
38. **Appendix A Document: Survey_Area A1 - Revised Sheets - Part 2 - May 16 2022 12:20PM**
39. **Appendix A Document: Survey_Area A1 - Sheets 17-24 (Signed and Sealed) - May 16 2022 12:20PM**
40. **Appendix A Document: Survey_Area A1 - Sheets 1-8 (Signed and Sealed) - May 16 2022 12:20PM**
41. **Appendix A Document: Survey_Area A1 - Sheets 25-32 (Signed and Sealed) - May 16 2022 12:20PM**
42. **Appendix A Document: Survey_Area A1 - Sheets 33-37 (Signed and Sealed) - May 16 2022 12:20PM**
43. **Appendix A Document: Survey_Area A1 - Sheets 38-40 (Signed and Sealed) - May 16 2022 12:20PM**
44. **Appendix A Document: Survey_Area A1 - Sheets 9-16 (Signed and Sealed) - May 16 2022 12:20PM**
45. **Appendix A Document: Survey_Area A2 - May 16 2022 12:20PM**
46. **Appendix A Document: Survey_Area A3 - May 16 2022 12:20PM**
47. **Appendix A Document: Survey_Area B1 - May 16 2022 12:20PM**
48. **Appendix A Document: Survey_Area B1 - Revised Sheets - May 16 2022 12:20PM**
49. **Appendix A Document: Survey_Area B1 - Sheets 13-16 (Signed and Sealed) - May 16 2022 12:20PM**
50. **Appendix A Document: Survey_Area B2 - May 16 2022 12:20PM**
51. **Appendix A Document: Survey_Area B2 - Sheets 11-12 (Signed and Sealed) - May 16 2022 12:20PM**
52. **Appendix A Document: Survey_Area B3 - May 16 2022 12:20PM**
53. **Appendix A Document: Survey_Area B3 - Sheets 4-5, 9-10 (Signed and Sealed) - May 16 2022 12:20PM**
54. **Appendix A Document: Survey_Area B4 - Sheet 9 (Signed and Sealed) - May 16 2022 12:20PM**
55. **Appendix A Document: Survey_Area B4 - Sheets 1-6 (Signed and Sealed) - May 16 2022 12:20PM**
56. **Appendix A Document: Survey_Area B4 - Sheets 7-12 (Signed and Sealed) - May 16 2022 12:20PM**
57. **Appendix A Document: Survey_Area C1 - SIGNED - 11404.01 TOPO - May 16 2022 12:20PM**
58. **Appendix A Document: Survey_Area C2 - SIGNED - 11404.01 TOPO - May 16 2022 12:20PM**
59. **Appendix A Document: Survey_Area C3 - SIGNED - 11404.01 - 7-7-17 - May 16 2022 12:20PM**
60. **Appendix A Document: Survey_Area C4 - Sheets 1-6 (Signed and Sealed) - May 16 2022 12:20PM**
61. **Appendix A Document: Survey_Area C4 - Sheets 7-11 (Signed and Sealed) - May 16 2022 12:20PM**
62. **Appendix A Document: Survey_Area D1 - Sheets 17-26 (Signed and Sealed) - May 16 2022 12:20PM**
63. **Appendix A Document: Survey_Area D1 - Sheets 1-8 (Signed and Sealed) - May 16 2022 12:20PM**

DocuSign Envelope ID: 252CE18E-2379-4ADB-97EB-9FFBFD5FF41F

64. **Appendix A Document: Survey_Area D1 - Sheets 9-16 (Signed and Sealed) - May 16 2022 12:20PM**
65. **Appendix A Document: Survey_Area E1 - Sheets 11-16 (Signed and Sealed) - May 16 2022 12:20PM**
66. **Appendix A Document: Survey_Area E1 - Sheets 1-5 (Signed and Sealed) - May 16 2022 12:20PM**
67. **Appendix A Document: Survey_Area E1 - Sheets 6-10 (Signed and Sealed) - May 16 2022 12:20PM**
68. **Appendix A Document: Survey_Area F1 - Sheets 11-14 (Signed and Sealed) - May 16 2022 12:20PM**
69. **Appendix A Document: Survey_Area F1 - Sheets 1-3 (Signed and Sealed) - May 16 2022 12:20PM**
70. **Appendix A Document: Survey_Area F1 - Sheets 4-5 (Signed and Sealed) - May 16 2022 12:20PM**
71. **Appendix A Document: Survey_Area F1 - Sheets 6-8 (Signed and Sealed) - May 16 2022 12:20PM**
72. **Appendix A Document: Survey_Area F1 - Sheets 9-10 (Signed and Sealed) - May 16 2022 12:20PM**
73. **Appendix A Document: Survey_Area G1 - Sheets 1-3 (Signed and Sealed) - May 16 2022 12:20PM**
74. **Appendix A Document: Survey_Area G1 - Sheets 4-6 (Signed and Sealed) - May 16 2022 12:20PM**
75. **Appendix A Document: Survey_Area H1 - Revised Sheets - May 16 2022 12:20PM**
76. **Appendix A Document: Survey_Area H1 - Sheets 1-3 (Signed and Sealed) - May 16 2022 12:20PM**
77. **Appendix A Document: Survey_Area H1 - Sheets 4-5 (Signed and Sealed) - May 16 2022 12:20PM**
78. **Appendix A Document: Survey_Area H1 - Sheets 6-9 (Signed and Sealed) - May 16 2022 12:20PM**
79. **Appendix A Document: Survey_Area I1 - Sheets 1-5 (Signed and Sealed) - May 16 2022 12:20PM**
80. **Appendix A Document: Survey_Area I1 - Sheets 6-9 (Signed and Sealed) - May 16 2022 12:20PM**
81. **Appendix A Document: Survey_Area J1 - Sheets 1-4 (Signed and Sealed) - May 16 2022 12:20PM**
82. **Appendix A Document: Survey_Area J1 - Sheets 5-8 (Signed and Sealed) - May 16 2022 12:20PM**
83. **Appendix A Document: Survey_Area K1 - Sheets 1-5 (Signed and Sealed) - May 16 2022 12:20PM**
84. **Appendix A Document: Survey_Area K1 - Sheets 6-9 (Signed and Sealed) - May 16 2022 12:20PM**
85. **Appendix A Document: Survey_Area L1- Revised Sheets - May 16 2022 12:20PM**
86. **Appendix A Document: Survey_Area M1 - Revised Sheets - May 16 2022 12:20PM**
87. **Appendix A Document: Survey_Area M1 - Sheets 1-3 (Signed and Sealed) - May 16 2022 12:20PM**
88. **Appendix A Document: Survey_Area M1 - Sheets 4-6 (Signed and Sealed) - May 16 2022 12:20PM**
89. **Appendix A Document:2019.08.26 Con Edison 20th Street North IG Test Pit #2_17002392A - May 16 2022 12:20PM**
90. **Appendix A Document:2019.08.26 Con Edison 20th Street North IG Test Pit #2_IMG_2756 - May 16 2022 12:20PM**
91. **Appendix A Document:2019.08.26 Con Edison 20th Street North IG Test Pit #2_IMG_2757 - May 16 2022 12:20PM**
92. **Appendix A Document:Contract 3 N Branch Int SewerReg M39 in Park South of 25th St - May 16 2022 12:20PM**
93. **Appendix A Document:Contract 4 S Branch Int Sewer Corlears Hook Houses Jackson to De - May 16 2022 12:20PM**
94. **Appendix A Document:Emergency Rehab of Sanitary and Combined sewers by the Shotcrete - May 16 2022 12:20PM**
95. **Broker's Certification 5-23-23 - May 28 2022 10:50AM**
96. **Disability Insurance JPL 5-24-23 - May 28 2022 10:53AM**
97. **Disability Insurance NYCC 3-31-23 - May 28 2022 10:56AM**
98. **EP-7 Drawings - May 16 2022 12:20PM**
99. **Insurance Certificate 5-23-23 - May 28 2022 10:55AM**
100. **JB Drawings - May 16 2022 12:20PM**
101. **Notice to Bidders - May 16 2022 12:20PM**
102. **NYC DPR Standard Drawings - May 16 2022 12:20PM**
103. **NYCC_JPL JV - SANDRESPC - Schedule B- MWBE Utilization Plan 2-22-22 - May 16 2022 1:33PM**
104. **Planholder List_ SANDRESPC (Addendum 5) - May 16 2022 12:20PM**
105. **Proposal/Bid - May 16 2022 12:20PM**
106. **Reference Document: 01. SANDRESM1_Mitigation Work Plan_2020.04.22_Part1 - May 16 2022 12:20PM**
107. **Reference Document: 01. SANDRESM1_Mitigation Work Plan_2020.04.22_Part2 - May 16 2022 12:20PM**

DocuSign Envelope ID: 252CE18E-2379-4ADB-97EB-9FFBFD5FF41F

108. **Reference Document: 01. SANDRESM1_Mitigation Work Plan_2020.04.22_Part3 - May 16 2022 12:20PM**
109. **Reference Document: 01. SANDRESM1_Mitigation Work Plan_2020.04.22_Part4 - May 16 2022 12:20PM**
110. **Reference Document: 01. SANDRESM1_Mitigation Work Plan_2020.04.22_Part5 - May 16 2022 12:20PM**
111. **Reference Document: 01. SANDRESM1_Mitigation Work Plan_2020.04.22_Part6 - May 16 2022 12:20PM**
112. **Reference Document: 01. SANDRESM1_Mitigation Work Plan_2020.04.22_Part7 - May 16 2022 12:20PM**
113. **Reference Document: 01. SANDRESM1_Mitigation Work Plan_2020.04.22_Part8 - May 16 2022 12:20PM**
114. **Reference Document: 02. SANDRESM1_RAP _ CHASP 2019.09.26 - May 16 2022 12:20PM**
115. **Reference Document: 03A. SANDRESM1 Supplemental Investigation Report_2019.08.29_Par - May 16 2022 12:20PM**
116. **Reference Document: 03B. Supplemental Investigation Report_FINAL_with App_2016.11.3 - May 16 2022 12:20PM**
117. **Reference Document: 04. SANDRESM1_Environmental Subsurface Investigation Report for - May 16 2022 12:20PM**
118. **Reference Document: 05. SANDRESM1_PA1_SubsurfaceInvestigationReport_Final_10-14-15_ - May 16 2022 12:20PM**
119. **Reference Document: 06. SANDRESM1_PA2_SubsurfaceInvestigation_Final_10-14-15 - May 16 2022 12:20PM**
120. **Reference Document: 07A. E21st St Works RIR OU2 Final 092710 - May 16 2022 12:20PM**
121. **Reference Document: 07B. E21st St Works RIR OU2 Final 092710_Appendices_Part01 - May 16 2022 12:20PM**
122. **Reference Document: 07B. E21st St Works RIR OU2 Final 092710_Appendices_Part02 - May 16 2022 12:20PM**
123. **Reference Document: 07B. E21st St Works RIR OU2 Final 092710_Appendices_Part03 - May 16 2022 12:20PM**
124. **Reference Document: 07B. E21st St Works RIR OU2 Final 092710_Appendices_Part04 - May 16 2022 12:20PM**
125. **Reference Document: 07B. E21st St Works RIR OU2 Final 092710_Appendices_Part05 - May 16 2022 12:20PM**
126. **Reference Document: 07B. E21st St Works RIR OU2 Final 092710_Appendices_Part06 - May 16 2022 12:20PM**
127. **Reference Document: 07B. E21st St Works RIR OU2 Final 092710_Appendices_Part07 - May 16 2022 12:20PM**
128. **Reference Document: 07B. E21st St Works RIR OU2 Final 092710_Appendices_Part08 - May 16 2022 12:20PM**
129. **Reference Document: 07B. E21st St Works RIR OU2 Final 092710_Appendices_Part09 - May 16 2022 12:20PM**
130. **Reference Document: 07B. E21st St Works RIR OU2 Final 092710_Appendices_Part10 - May 16 2022 12:20PM**
131. **Reference Document: 07B. E21st St Works RIR OU2 Final 092710_Appendices_Part11 - May 16 2022 12:20PM**
132. **Reference Document: 07B. E21st St Works RIR OU2 Final 092710_Appendices_Part12 - May 16 2022 12:20PM**
133. **Reference Document: 08A. DRAFT RIR - Stuyvesant Town Former MGP Sites - March 2009 - May 16 2022 12:20PM**
134. **Reference Document: 08B. DRAFT RIR - Stuyvesant Town Former MGP Sites - March 2009_ - May 16 2022 12:20PM**
135. **Reference Document: 09. Con Ed RI_OU2_East 11th Street Works Site_2009.12_Part1 - May 16 2022 12:20PM**

136. **Reference Document: 09. Con Ed RI_OU2_East 11th Street Works Site_2009.12_Part2 - May 16 2022 12:20PM**
137. **Reference Document: 09. Con Ed RI_OU2_East 11th Street Works Site_2009.12_Part3 - May 16 2022 12:20PM**
138. **Reference Document: 10. SANDRESPC SWPPP and Appendices - May 16 2022 12:20PM**
139. **Reference Document: 12. D95750 OH Sign As-Built - FDR Drive and Harlem River Drive - May 16 2022 12:20PM**
140. **SANDRESPC Addendum 1 - May 16 2022 12:20PM**
141. **SANDRESPC Addendum 2 - May 16 2022 12:20PM**
142. **SANDRESPC Addendum 3 - May 16 2022 12:20PM**
143. **SANDRESPC Addendum 4 - May 16 2022 12:20PM**
144. **SANDRESPC Addendum 5 - May 16 2022 12:20PM**
145. **SANDRESPC Addendum 6 - May 16 2022 12:20PM**
146. **SANDRESPC Addendum 7 - May 16 2022 12:20PM**
147. **SANDRESPC Addendum 8 - May 16 2022 12:20PM**
148. **SANDRESPC Addendum 9 - May 16 2022 12:20PM**
149. **SANDRESPC Bid Booklet - May 16 2022 12:20PM**
150. **SANDRESPC Drawings 1/3 (add 6) - May 16 2022 12:20PM**
151. **SANDRESPC Drawings 2/3 (add 6) - May 16 2022 12:20PM**
152. **SANDRESPC Drawings 3/3 (add 6) - May 16 2022 12:20PM**
153. **SANDRESPC_Bidder #2_NYCC_JPL JV_Revised Bid Schedule from PASSPort - May 16 2022 1:30PM**
154. **Security-Bond - May 28 2022 10:59AM**
155. **Volume 3 (Addendum 6) - May 16 2022 12:20PM**
156. **Worker's Compensation 12-4-22 - May 28 2022 11:00AM**

The above order does not represent an order of precedence. The Contract shall be governed by the order of precedence, if any, in the Contract Documents or by ordinary contract principles if no such order of precedence exists.

Each party is signing this Contract electronically on the date stated in that party's electronic signature.

The City of New York
By: **DEPARTMENT OF DESIGN AND CONSTRUCTION**

DocuSigned by:
ERIC MACFARLANE
1A87ABA0188B41C...
(Signature)

Name: ERIC MACFARLANE

Title: Deputy Commissioner

Date: 6/1/2022 | 08:27:57 PDT

Contractor
By: **NYCC JPL JV**

DocuSigned by:
John Pizzirusso
05391FF7135441C...
(Signature)

Name: John Pizzirusso

Title: President

Date: 6/1/2022 | 07:00:05 PDT

DocuSign Envelope ID: 252CE18E-2379-4ADB-97EB-9FFBFD5FF41F

ACKNOWLEDGEMENT OF PRINCIPAL, IF A CORPORATION

State of _____ County of _____ ss:

On this _____ day of _____, _____, before me personally came _____ to me known who, being by me duly sworn did depose and say that he resides at _____ _____ that he is the _____ of the corporation described in and which executed the foregoing instrument; that he knows the seal of said corporation; that one of the seals affixed to said instrument is such seal; that it was so affixed by order of the directors of said corporation, and that he signed his name thereto by like order.

_____
Notary Public or Commissioner of Deeds

ACKNOWLEDGEMENT OF PRINCIPAL, IF A PARTNERSHIP

State of _____ County of _____ ss:

On this _____ day of _____, _____, before me personally appeared _____ to me known, and known to me to be one of the members of the firm of _____ _____ described in and who executed the foregoing instrument; and he acknowledged to me that he executed the same as and for the act and deed of said firm.

_____
Notary Public or Commissioner of Deeds

ACKNOWLEDGEMENT OF PRINCIPAL, IF AN INDIVIDUAL

State of _____ County of _____ ss:

On this _____ day of _____, _____, before me personally appeared _____ to me known, and known to me to be the person described in and who executed the foregoing instrument; and acknowledged that he executed the same.

_____
Notary Public or Commissioner of Deeds

ACKNOWLEDGEMENT BY COMMISSIONER

State of _____ County of _____ ss:

On this _____ day of _____, _____, before me personally came _____ to me known, and known to be the Deputy Commissioner of the Department of Design and Construction of The City of New York, the person described as such in and who as such executed the foregoing instrument and acknowledged to me that he executed the same as Deputy Commissioner for the purposes therein mentioned.

_____
Notary Public or Commissioner of Deeds

A U T H O R I T Y

MAYOR'S CERTIFICATE NO. CBX DATED
BUDGET DIRECTOR'S CERTIFICATE NO. DATED

APPROPRIATION
COMMISSIONER'S CERTIFICATE

In conformity with the provisions of Section 6-101 of the Administrative Code of the City of New York, it is hereby certified that the estimated cost of the work, materials and supplies required by the within Contract, amounting to

_____

_____

Dollars ($ _____)

is chargeable to the fund of the Department of Design and Construction entitled Code

_____

_____

_____
Department of Design and Construction

I hereby certify that the specifications contained herein comply with the terms and conditions of the BUDGET.

_____
Commissioner

COMPTROLLER'S CERTIFICATE

The City of New York_____

Pursuant to the provisions of Section 6-101 of the Administrative Code of the City of New York, I hereby certify that there remains unapplied and unexpended a balance of the above mentioned fund applicable to this Contract sufficient to pay the estimated expense of executing the same viz:

$_____

_____
Comptroller

MAYOR'S CERTIFICATE OR CERTIFICATE OF THE DIRECTOR OF THE BUDGET

<u>Performance Bond #1 (Pages 100 to 103)</u>: Use if the total contract price is $5 Million Or Less. Performance Bond #1 has been approved by the U.S. Small Business Administration ("SBA") for participation in its Bond Guarantee Program.

PERFORMANCE BOND #1

KNOW ALL PERSONS BY THESE PRESENTS:,
That we, _____

_____

_____

hereinafter referred to as the "Principal,"
and, _____

_____

_____

hereinafter referred to as the "Surety" ("Sureties") are held and firmly bound to THE CITY OF NEW YORK, hereinafter referred to as the "City" or to its successors and assigns in the penal sum
of _____

_____

_____

($_____) Dollars, lawful money of the United States for the payment of which said sum of money well and truly to be made, we, and each of us, bind ourselves, our heirs, executors, administrators, successors and assigns, jointly and severally, firmly by these presents.

WHEREAS, the Principal is about to enter, or has entered, into a Contract in writing with the City for

_____

_____

a copy of which Contract is annexed to and hereby made a part of this bond as though herein set forth in full;

NOW, THEREFORE, the conditions of this obligation are such that if the Principal, his or its representatives or assigns, shall well and faithfully perform the said Contract and all modifications, amendments, additions and alterations thereto that may hereafter be made, according to its terms and its true intent and meaning, including repair and or replacement of defective work and guarantees of maintenance for the periods stated in the Contract, and shall fully indemnify and save harmless the City from all cost and damage which it may suffer by reason of the Principal's default of the Contract, and shall fully reimburse and repay the City for all outlay and expense which the City may incur in making

<u>Performance Bond #1 (Pages 100 to 103)</u>: Use if the total contract price is $5 Million Or Less. Performance Bond #1 has been approved by the U.S. Small Business Administration ("SBA") for participation in its Bond Guarantee Program.

good any such default and shall protect the said City of New York against, and pay any and all amounts, damages, cost and judgments which may or shall be recovered against said City or its officers or agents or which the said City of New York may be called upon to pay any person or corporation by reason of any damages arising or growing out of the Principal's default of the Contract, then this obligation shall be null and void, otherwise to remain in full force and effect.

The Surety (Sureties), for value received, hereby stipulates and agrees, upon written notice from the City that the City has determined that the Principal is in default of the Contract, to (1) pay the City the cost to complete the contract as determined by the City in excess of the balance of the Contract held by the City, plus any damages or costs to which the City is entitled, up to the full amount of the above penal sum, (2) fully perform and complete the Work to be performed under the Contract, pursuant to the terms, conditions, and covenants thereof, or (3) tender a completion Contractor that is acceptable to the City. The Surety (Sureties) further agrees, at its option, either to notify the City that it elects to pay the city the cost of completion plus any applicable damages and costs under option (1) above, or to commence and diligently perform the Work specified in the Contract, including physical site work, within twenty-five (25) business days after written notice thereof from the City and, if the Surety elects to fully perform and complete the Work, then to complete all Work within the time set forth in the Contract or such other time as agreed to between the City and Surety in accordance with the Contract. If the Surety elects to tender payment pursuant to (1) above, then the Surety shall tender such amount within fifteen (15) business days notification from the City of the cost of completion. The Surety and the City reserve all rights and defenses each may have against the other; provided, however, that the Surety expressly agrees that its reservation of rights shall not provide a basis for non-performance of its obligation to pay the City the cost of completion, to commence and complete all Work as provided herein, or to tender a completion contractor.

The Surety (Sureties), for value received, for itself and its successors and assigns, hereby stipulates and agrees that the obligation of said Surety (Sureties) and its bond shall be in no way impaired or affected by any extension of time, modification, omission, addition, or change in or to the said Contract or the Work to be performed thereunder, or by any payment thereunder before the time required therein, or by any waiver of any provisions thereof, or any moneys due or to become due thereunder; and said Surety (Sureties) does hereby waive notice of any and all of such extensions, modifications, omissions, additions, changes, payments, and waivers, and hereby expressly stipulates and agrees that any and all things done and omitted to be done by and in relation to subcontractors shall have the same effect as to said Surety (Sureties) as though done or omitted to be done by or in relation to said Principal. Notwithstanding the above, if the City makes payments to the Principal before the time required by the contract that in the aggregate exceed $100,000 or 10% of the Contract price, whichever is less, and that have not become earned prior to the Principal being found to be in default, then all payments made to the Principal before the time required by the Contract shall be added to the remaining contract value available to be paid for the completion of the Contract as if such sums had not been paid to the Principal, but shall not provide a basis for non-performance of its obligation to pay the City the cost of completion, to commence and to complete all Work as provided herein, or to tender a completion contractor.

<u>Performance Bond #1 (Pages 100 to 103)</u>: Use if the total contract price is $5 Million Or Less. Performance Bond #1 has been approved by the U.S. Small Business Administration ("SBA") for participation in its Bond Guarantee Program.

IN WITNESS WHEREOF, The Principal and the Surety (Sureties) have hereunto set their hands and seals, and such of them as are corporations have caused their corporate seals to be hereunto affixed and these presents to be signed by their proper officers, this

_____ day of _____, 20_____.

(Seal)

_____(L.S.)
Principal

By:_____.

(Seal)

Surety

By:_____.
_____.

(Seal) Surety

By:_____.
_____.

(Seal) Surety

By:_____.
_____.

(Seal) Surety

By:_____.
_____.

(Seal) Surety

By:_____.

Bond Premium Rate _____.

Bond Premium Cost _____.

If the Contractor (Principal) is a partnership, the bond should be signed by each of the individuals who are partners.

If the Contractor (Principal) is a corporation, the bond should be signed in its correct corporate name by a duly authorized officer, agent, or attorney-in-fact.

There should be executed an appropriate number of counterparts of the bond corresponding to the number of counterparts of the Contract.

<u>Performance Bond #1 (Pages 100 to 103)</u>: Use if the total contract price is $5 Million Or Less. Performance Bond #1 has been approved by the U.S. Small Business Administration ("SBA") for participation in its Bond Guarantee Program.<u>m.</u>

<u>ACKNOWLEDGMENT OF PRINCIPAL IF A CORPORATION</u>

State of _____ County of _____ ss:

On this _____ day of _____, 20_____ before me personally came _____,
to me known, who, being by me duly sworn did depose and say that he/she resides at _____
_____; that he/she is the _____
of the corporation described in and which executed the foregoing instrument; and that he/she signed his/her name to the foregoing instrument by order of the directors of said corporation as the duly authorized and binding act thereof.

_____
Notary Public or Commissioner of Deeds.

<u>ACKNOWLEDGMENT OF PRINCIPAL IF A PARTNERSHIP</u>

State of _____ County of _____ ss:

On this _____ day of _____, 20 _____ before me personally came _____,
to me known, who, being by me duly sworn did dispose and say that he/she resides at _____
_____; that he/she is _____ partner of _____, a limited/general partnership existing under the laws of the State of _____, the partnership described in and which executed the foregoing instrument; and that he/she signed his/her name to the foregoing instrument as the duly authorized and binding act of said partnership.

_____
Notary Public or Commissioner of Deeds.

<u>ACKNOWLEDGMENT OF PRINCIPAL IF AN INDIVIDUAL</u>

State of _____ County of _____ ss:

On this _____ day of _____, 20_____ before me personally came _____,
to me known, who,.being by me duly sworn did depose and say that he/she resides at _____
_____, and that he/she is the individual whose name is subscribed to the within instrument and acknowledged to me that by his/her signature on the instrument, said individual executed the instrument.

_____
Notary Public or Commissioner of Deeds

Each executed bond should be accompanied by: (a) appropriate acknowledgments of the respective parties; (b) appropriate duly certified copy of Power of Attorney or other certificate of authority where bond is executed by agent, officer or other representative of Principal or Surety; (c) a duly certified extract from By-Laws or resolutions of Surety under which Power of Attorney or other certificate of authority of its agent, officer or representative was issued, and (d) certified copy of latest published financial statement of assets and liabilities of Surety.

* * * * * * * *

Affix Acknowledgments and Justification of Sureties.

Performance Bond #2 (Pages 104 to 107): Use if the total contract price is more than $5 Million.

Bond No. 015210520/K40260055

PERFORMANCE BOND #2

KNOW ALL PERSONS BY THESE PRESENTS:,
That we, NYCC JPL JV

708 Sharrotts Road

Staten Island, NY 10309

hereinafter referred to as the "Principal,"
and, Liberty Mutual Insurance Company, 175 Berkeley Street, Boston, MA 02116

& Vigilant Insurance Company, 202B Halls Mill Road, Whitehouse Station, NJ 08889

hereinafter referred to as the "Surety" ("Sureties") are held and firmly bound to THE CITY OF NEW YORK, hereinafter referred to as the "City" or to its successors and assigns in the penal sum of One Hundred Fifty-four Million Nine Hundred Ninety-one Thousand Fifty-four And No/100

($154,991,054.00) Dollars, lawful money of the United States for the payment of which said sum of money well and truly to be made, we, and each of us, bind ourselves, our heirs, executors, administrators, successors and assigns, jointly and severally, firmly by these presents.

WHEREAS, the Principal is about to enter, or has entered, into a Contract in writing with the City for

East Coast Resiliency from Montgomery Street to East 25th Street - SANDRESPC

a copy of which Contract is annexed to and hereby made a part of this bond as though herein set forth in full;

NOW, THEREFORE, the conditions of this obligation are such that if the Principal, his or its representatives or assigns, shall well and faithfully perform the said Contract and all modifications, amendments, additions and alterations thereto that may hereafter be made, according to its terms and its true intent and meaning, including repair and or replacement of defective work and guarantees of maintenance for the periods stated in the Contract, and shall fully indemnify and save harmless the City from all cost and damage which it may suffer by reason of the Principal's default of the Contract, and shall fully reimburse and repay the City for all outlay and expense which the City may incur in making

<u>Performance Bond #2 (Pages 104 to 107)</u>: Use if the total contract price is more than $5 Million.

good any such default and shall protect the said City of New York against, and pay any and all amounts, damages, cost and judgments which may or shall be recovered against said City or its officers or agents or which the said City of New York may be called upon to pay any person or corporation by reason of any damages arising or growing out of the Principal's default of the Contract, then this obligation shall be null and void, otherwise to remain in full force and effect.

The Surety (Sureties), for value received, hereby stipulates and agrees, upon written notice from the City that the City has determined that the Principal is in default of the Contract, to either (1) pay the full amount of the above penal sum in complete discharge and exoneration of this bond and of all the liabilities of the Surety relating to this bond, or (2) fully perform and complete the Work to be performed under the Contract, pursuant to the terms, conditions, and covenants thereof. The Surety (Sureties) further agrees, at its option, either to tender the penal sum or to commence and diligently perform the Work specified in the Contract, including physical site work, within twenty-five (25) business days after written notice thereof from the City and to complete all Work within the time set forth in the Contract or such other time as agreed to between the City and Surety in accordance with the Contract. The Surety and the City reserve all rights and defenses each may have against the other; provided, however, that the Surety expressly agrees that its reservation of rights shall not provide a basis for non-performance of its obligation to commence and to complete all Work as provided herein.

The Surety (Sureties), for value received, for itself and its successors and assigns, hereby stipulates and agrees that the obligation of said Surety (Sureties) and its bond shall be in no way impaired or affected by any extension of time, modification, omission, addition, or change in or to the said Contract or the Work to be performed thereunder, or by any payment thereunder before the time required therein, or by any waiver of any provisions thereof, or by any assignment, subletting or other transfer thereof or of any Work to be performed or any moneys due or to become due thereunder; and said Surety (Sureties) does hereby waive notice of any and all of such extensions, modifications, omissions, additions, changes, payments, waivers, assignments, subcontracts and transfers, and hereby expressly stipulates and agrees that any and all things done and omitted to be done by and in relation to assignees, subcontractors, and other transferees shall have the same effect as to said Surety (Sureties) as though done or omitted to be done by or in relation to said Principal.

Performance Bond #2 (Pages 104 to 107): Use if the total contract price is more than $5 Million.

IN WITNESS WHEREOF, The Principal and the Surety (Sureties) have hereunto set their hands and seals, and such of them as are corporations have caused their corporate seals to be hereunto affixed and these presents to be signed by their proper officers, this

25th day of May 2022.

(Seal)

NYCC JPL JV (L.S.)
Principal

By: Donna Marie Russo

(Seal)

Surety
Liberty Mutual Insurance Company

By:
Loriann P. Fay, Attorney-in-Fact

(Seal)

Vigilant Insurance Company Surety

By:
Thomas Hansson, Attorney-in-Fact

(Seal)

Surety

By:

(Seal)

Surety

By:

(Seal)

Surety

By:

Bond Premium Rate _____.

Bond Premium Cost _____.

If the Contractor (Principal) is a partnership, the bond should be signed by each of the individuals who are partners.

If the Contractor (Principal) is a corporation, the bond should be signed in its correct corporate name by a duly authorized officer, agent, or attorney-in-fact.

There should be executed an appropriate number of counterparts of the bond corresponding to the number of counterparts of the Contract.

Performance Bond #2 (Pages 104 to 107): Use if the total contract price is more than $5 Million.

ACKNOWLEDGMENT OF PRINCIPAL IF A CORPORATION

State of _____ County of _____ ss:

On this _____ day of _____, 20 _____ before me personally came _____,
to me known, who, being by me duly sworn did depose and say that he resides at _____
_____; that he/she is the _____
of the corporation described in and which executed the foregoing instrument; that he/she signed his/her name to the foregoing instrument by order of the directors of said corporation as the duly authorized and binding act thereof.

_____
Notary Public or Commissioner of Deeds.

ACKNOWLEDGMENT OF PRINCIPAL IF A PARTNERSHIP

State of NEW YORK County of RICHMOND ss:

On this 25TH day of MAY, 20 22 before me personally came DONNAMARIE RUSSO
to me known, who, being by me duly sworn did depose and say that ~~he/~~she resides at 100 VERONA ST
_____; that ~~he/~~she is PRESIDENT partner of NYCC/DPL JV, a limited/general partnership existing under the laws of the State of NEW YORK, the partnership described in and which executed the foregoing instrument; and that ~~he/she~~ signed his/her name to the foregoing instrument as the duly authorized and binding act of said partnership.

JERRY SICA
Notary Public, State of New York
No. 01SI 4908489
Qualified in Richmond County
Commission Expires Oct. 26, 2022

_____
Notary Public or Commissioner of Deeds

ACKNOWLEDGMENT OF PRINCIPAL IF AN INDIVIDUAL

State of _____ County of _____ ss:

On this _____ day of _____, 20_____ before me personally came _____,
to me known, who, being by me duly sworn did depose and say that he/she resides at_____
_____, and that he/she is the individual whose name is subscribed to the within instrument and acknowledged to me that by his/her signature on the instrument, said individual executed the instrument.

_____
Notary Public or Commissioner of Deeds

Each executed bond should be accompanied by: (a) appropriate acknowledgments of the respective parties; (b) appropriate duly certified copy of Power of Attorney or other certificate of authority where bond is executed by agent, officer or other representative of Principal or Surety; (c) a duly certified extract from By-Laws or resolutions of Surety under which Power of Attorney or other certificate of authority of its agent, officer or representative was issued, and (d) certified copy of latest published financial statement of assets and liabilities of Surety.

* * * * * * * *

Affix Acknowledgments and Justification of Sureties.

SURETY COMPANY'S ACKNOWLEDGMENT

STATE OF New York)

COUNTY OF Suffolk) ss.:

CITY OF East Northport)

On this 25th day of May in the year 2022 before me personally came Loriann P. Fay, to me known, who, being by me duly sworn, did depose and say that he/she/they reside(s) in East Northport, NY, that he/she/they (is) (are) the Attorney-In-Fact duly appointed of the Liberty Mutual Insurance Company the corporation described in and which executed the above instrument; that he/she/they know(s) the seal of said corporation; that the seal affixed to said instrument is such corporate seal; is such corporate seal; that it was so affixed by authority of the board of directors of said corporation, and that he/she/they signed his/her/their name(s) thereto by like authority.

NOTARY PUBLIC

GEOFFREY LESNIAK
Notary Public, State of New York
No. 01LE6376846
Qualified in Kings County
Commission Expires June 18, 2022

This Power of Attorney limits the acts of those named herein, and they have no authority to bind the Company except in the manner and to the extent herein stated.

Liberty Mutual Insurance Company
The Ohio Casualty Insurance Company
West American Insurance Company

Certificate No: 8200197

POWER OF ATTORNEY

KNOWN ALL PERSONS BY THESE PRESENTS: That The Ohio Casualty Insurance Company is a corporation duly organized under the laws of the State of New Hampshire, that Liberty Mutual Insurance Company is a corporation duly organized under the laws of the State of Massachusetts, and West American Insurance Company is a corporation duly organized under the laws of the State of Indiana (herein collectively called the `Companies.), pursuant to and by authority herein set forth, does hereby name, constitute and appoint, Loriann P. Fay

all of the city of Northport state of NY each individually if there be more than one named, its true and lawful attorney-in-fact to make, execute, seal, acknowledge and deliver, for and on its behalf as surety and as its act and deed, any and all undertakings, bonds, recognizances and other surety obligations, in pursuance of these presents and shall be as binding upon the Companies as if they have been duly signed by the president and attested by the secretary of the Companies in their own proper persons.

IN WITNESS WHEREOF, this Power of Attorney has been subscribed by an authorized officer or official of the Companies and the corporate seals of the Companies have been affixed thereto this 31st day of December, 2018.

Liberty Mutual Insurance Company
The Ohio Casualty Insurance Company
West American Insurance Company

By: David M. Carey, Assistant Secretary

State of PENNSYLVANIA
County of MONTGOMERY ss

On this 31st day of December, 2018 before me personally appeared David M. Carey, who acknowledged himself to be the Assistant Secretary of Liberty Mutual Insurance Company, The Ohio Casualty Company, and West American Insurance Company, and that he, as such, being authorized so to do, execute the foregoing instrument for the purposes therein contained by signing on behalf of the corporations by himself as a duly authorized officer.

IN WITNESS WHEREOF, I have hereunto subscribed my name and affixed my notarial seal at King of Prussia, Pennsylvania, on the day and year first above written.

COMMONWEALTH OF PENNSYLVANIA
Notarial Seal
Teresa Pastella, Notary Public
Upper Merion Twp., Montgomery County
My Commission Expires March 28, 2021
Member, Pennsylvania Association of Notaries

By: Teresa Pastella, Notary Public

This Power of Attorney is made and executed pursuant to and by authority of the following By-laws and Authorizations of The Ohio Casualty Insurance Company, Liberty Mutual Insurance Company, and West American Insurance Company which resolutions are now in full force and effect reading as follows:

ARTICLE IV ´ OFFICERS: Section 12. Power of Attorney.
Any officer or other official of the Corporation authorized for that purpose in writing by the Chairman or the President, and subject to such limitation as the Chairman or the President may prescribe, shall appoint such attorneys-in-fact, as may be necessary to act in behalf of the Corporation to make, execute, seal, acknowledge and deliver as surety any and all undertakings, bonds, recognizances and other surety obligations. Such attorneys-in-fact, subject to the limitations set forth in their respective powers of attorney, shall have full power to bind the Corporation by their signature and execution of any such instruments and to attach thereto the seal of the Corporation. When so executed, such instruments shall be as binding as if signed by the President and attested to by the Secretary. Any power or authority granted to any representative or attorney-in-fact under the provisions of this article may be revoked at any time by the Board, the Chairman, the President or by the officer or officers granting such power or authority.

ARTICLE XIII ¨ Execution of Contracts: Section 5. Surety Bonds and Undertakings.
Any officer of the Company authorized for that purpose in writing by the chairman or the president, and subject to such limitations as the chairman or the president may prescribe, shall appoint such attorneys-in-fact, as may be necessary to act in behalf of the Company to make, execute, seal, acknowledge and deliver as surety any and all undertakings, bonds, recognizances and other surety obligations. Such attorneys-in-fact subject to the limitations set forth in their respective powers of attorney, shall have full power to bind the Company by their signature and execution of any such instruments and to attach thereto the seal of the Company. When so executed such instruments shall be as binding as if signed by the president and attested by the secretary.

Certificate of Designation ¨ The President of the Company, acting pursuant to the Bylaws of the Company, authorizes David M. Carey, Assistant Secretary to appoint such attorneys-in-fact as may be necessary to act on behalf of the Company to make, execute, seal, acknowledge and deliver as surety any and all undertakings, bonds, recognizances and other surety obligations.

Authorization ¨ By unanimous consent of the Company's Board of Directors, the Company consents that facsimile or mechanically reproduced signature of any assistant secretary of the Company, wherever appearing upon a certified copy of any power of attorney issued by the Company in connection with surety bonds, shall be valid and binding upon the Company with the same force and effect as though manually affixed.

I, Renee C. Llewellyn, the undersigned, Assistant Secretary, The Ohio Casualty Insurance Company, Liberty Mutual Insurance Company, and West American Insurance Company do hereby certify that the original power of attorney of which the foregoing is a full, true and correct copy of the Power of Attorney executed by said Companies, is in full force and effect and has not been revoked.

IN TESTIMONY WHEREOF, I have hereunto set my hand and affixed the seals of said Companies this 25th day of May, 2022

By: Renee C. Llewellyn, Assistant Secretary

Not valid for mortgage, note, loan, letter of credit, currency rate, interest rate or residual value guarantees.

To confirm the validity of this Power of Attorney call 1-610-832-8240 between 9:00 am and 4:30 pm EST on any business day.

LIBERTY MUTUAL INSURANCE COMPANY

FINANCIAL STATEMENT — DECEMBER 31, 2020

Assets

Cash and Bank Deposits	$2,058,007,542
*Bonds — U.S Government	2,209,760,437
*Other Bonds	15,902,755,586
*Stocks	18,517,107,230
Real Estate	193,169,809
Agents' Balances or Uncollected Premiums	6,970,170,469
Accrued Interest and Rents	118,399,147
Other Admitted Assets	12,079,597,645
Total Admitted Assets	**$58,048,967,865**

Liabilities

Unearned Premiums		$8,448,706,991
Reserve for Claims and Claims Expense		23,879,216,613
Funds Held Under Reinsurance Treaties		343,068,613
Reserve for Dividends to Policyholders		1,192,716
Additional Statutory Reserve		77,397,000
Reserve for Commissions, Taxes and Other Liabilities		6,279,510,804
Total		**$39,029,092,737**
Special Surplus Funds	$178,155,102	
Capital Stock	10,000,075	
Paid in Surplus	10,945,045,214	
Unassigned Surplus	7,886,674,737	
Surplus to Policyholders		**19,019,875,128**
Total Liabilities and Surplus		**$58,048,967,865**

LIBERTY MUTUAL INSURANCE COMPANY INCORPORATED 1912 MASSACHUSETTS

* Bonds are stated at amortized or investment value; Stocks at Association Market Values.
The foregoing financial information is taken from Liberty Mutual Insurance Company's financial statement filed with the state of Massachusetts Department of Insurance.

I, TIM MIKOLAJEWSKI, Assistant Secretary of Liberty Mutual Insurance Company, do hereby certify that the foregoing is a true, and correct statement of the Assets and Liabilities of said Corporation, as of December 31, 2020, to the best of my knowledge and belief.

IN WITNESS WHEREOF, I have hereunto set my hand and affixed the seal of said Corporation at Seattle, Washington, this 25th day of March, 2021.

T A Mikolajewski

Assistant Secretary

Individual Acknowledgment

State of _____
County of _____

On this _____ day of _____, _____, before me personally came _____ and known to me to be the individual described in and who executed the foregoing instrument, and acknowledge to me that he executed the same.

My commission expires: _____ _____
Notary Public

Firm Acknowledgment

State of _____
County of _____

On this _____ day of _____, _____, before me personally came _____ to me known and known to me to be a member of the firm of _____ described in and who executed the foregoing instrument, and he thereupon acknowledged to me that he executed the same as and for the act and deed of said firm.

My commission expires: _____ _____
Notary Public

Corporation Acknowledgment

State of NEW YORK
County of Richmond

On this 25th day of May, 2022, before me personally came DONNAMARIE RASSO, to me known who being by me duly sworn, did depose and say that she is the PRESIDENT of NEW YORK COMPLETE CORP/JPL JV the corporation described in and which executed the above instrument; that she knows the seal of said corporation; that the seal affixed to said instrument is such corporate seal; that it was so affixed by order of the Board of Directors of said corporation, and that she signed her name thereto by like order.

My commission expires: JERRY SICA
Notary Public, State of New York
No. 01SI 4908489
Qualified in Richmond County
Commission Expires Oct. 26, 2025
Notary Public

Surety Acknowledgment

State of New York
County of New York

On 5/25/2022 before me personally came THOMAS HANSSON to me known, who, being by me duly sworn, did depose and say that he/she is an Attorney-in-Fact of VIGILANT INSURANCE COMPANY the corporation described in and which executed the within instrument; that he/she knows the corporate seal of said corporation; that the seal affixed to the within instrument is such corporate seal, and that he/she signed the said instrument and affixed the said seal as Attorney-in-Fact by authority of the Board of Directors of said corporation and by authority of this office under the Standing Resolutions thereof.

My commission expires: AL CAPPOLLA
Notary Public, State of New York
No. 01CA4890479
Qualified in New York County
Commission Expires April 27, 2023

CHUBB

Power of Attorney

Federal Insurance Company | Vigilant Insurance Company | Pacific Indemnity Company
Westchester Fire Insurance Company | ACE American Insurance Company

Know All by These Presents, that **FEDERAL INSURANCE COMPANY**, an Indiana corporation, **VIGILANT INSURANCE COMPANY**, a New York corporation, **PACIFIC INDEMNITY COMPANY**, a Wisconsin corporation, **WESTCHESTER FIRE INSURANCE COMPANY** and **ACE AMERICAN INSURANCE COMPANY** corporations of the Commonwealth of Pennsylvania, do each hereby constitute and appoint Thomas Hansson of Garden City, New York

each as their true and lawful Attorney-in-Fact to execute under such designation in their names and to affix their corporate seals to and deliver for and on their behalf as surety thereon or otherwise, bonds and undertakings and other writings obligatory in the nature thereof (other than bail bonds) given or executed in the course of business, and any instruments amending or altering the same, and consents to the modification or alteration of any instrument referred to in said bonds or obligations.

In Witness Whereof, said **FEDERAL INSURANCE COMPANY, VIGILANT INSURANCE COMPANY, PACIFIC INDEMNITY COMPANY, WESTCHESTER FIRE INSURANCE COMPANY** and **ACE AMERICAN INSURANCE COMPANY** have each executed and attested these presents and affixed their corporate seals on this **16th** day of **April, 2021.**

Dawn M. Chloros
Dawn M. Chloros, Assistant Secretary

Stephen M. Haney, Vice President

STATE OF NEW JERSEY
County of Hunterdon SS.

On this **16th** day of **April, 2021** before me, a Notary Public of New Jersey, personally came Dawn M. Chloros and Stephen M. Haney, to me known to be Assistant Secretary and Vice President, respectively, of FEDERAL INSURANCE COMPANY, VIGILANT INSURANCE COMPANY, PACIFIC INDEMNITY COMPANY, WESTCHESTER FIRE INSURANCE COMPANY and ACE AMERICAN INSURANCE COMPANY, the companies which executed the foregoing Power of Attorney, and the said Dawn M. Chloros and Stephen M. Haney, being by me duly sworn, severally and each for herself and himself did depose and say that they are Assistant Secretary and Vice President, respectively, of FEDERAL INSURANCE COMPANY, VIGILANT INSURANCE COMPANY, PACIFIC INDEMNITY COMPANY, WESTCHESTER FIRE INSURANCE COMPANY and ACE AMERICAN INSURANCE COMPANY and know the corporate seals thereof, that the seals affixed to the foregoing Power of Attorney are such corporate seals and were thereto affixed by authority of said Companies; and that their signatures as such officers were duly affixed and subscribed by like authority.

Notarial Seal

KATHERINE J. ADELAAR
NOTARY PUBLIC OF NEW JERSEY
No. 2316685
Commission Expires July 16, 2024

Notary Public

CERTIFICATION

Resolutions adopted by the Boards of Directors of FEDERAL INSURANCE COMPANY, VIGILANT INSURANCE COMPANY, and PACIFIC INDEMNITY COMPANY on August 30, 2016; WESTCHESTER FIRE INSURANCE COMPANY on December 11, 2006; and ACE AMERICAN INSURANCE COMPANY on March 20, 2009:

"RESOLVED, that the following authorizations relate to the execution, for and on behalf of the Company, of bonds, undertakings, recognizances, contracts and other written commitments of the Company entered into in the ordinary course of business (each a "Written Commitment"):

(1) Each of the Chairman, the President and the Vice Presidents of the Company is hereby authorized to execute any Written Commitment for and on behalf of the Company, under the seal of the Company or otherwise.

(2) Each duly appointed attorney-in-fact of the Company is hereby authorized to execute any Written Commitment for and on behalf of the Company, under the seal of the Company or otherwise, to the extent that such action is authorized by the grant of powers provided for in such person's written appointment as such attorney-in-fact.

(3) Each of the Chairman, the President and the Vice Presidents of the Company is hereby authorized, for and on behalf of the Company, to appoint in writing any person the attorney-in-fact of the Company with full power and authority to execute, for and on behalf of the Company, under the seal of the Company or otherwise, such Written Commitments of the Company as may be specified in such written appointment, which specification may be by general type or class of Written Commitments or by specification of one or more particular Written Commitments.

(4) Each of the Chairman, the President and the Vice Presidents of the Company is hereby authorized, for and on behalf of the Company, to delegate in writing to any other officer of the Company the authority to execute, for and on behalf of the Company, under the Company's seal or otherwise, such Written Commitments of the Company as are specified in such written delegation, which specification may be by general type or class of Written Commitments or by specification of one or more particular Written Commitments.

(5) The signature of any officer or other person executing any Written Commitment or appointment or delegation pursuant to this Resolution, and the seal of the Company, may be affixed by facsimile on such Written Commitment or written appointment or delegation.

FURTHER RESOLVED, that the foregoing Resolution shall not be deemed to be an exclusive statement of the powers and authority of officers, employees and other persons to act for and on behalf of the Company, and such Resolution shall not limit or otherwise affect the exercise of any such power or authority otherwise validly granted or vested."

I, Dawn M. Chloros, Assistant Secretary of FEDERAL INSURANCE COMPANY, VIGILANT INSURANCE COMPANY, PACIFIC INDEMNITY COMPANY, WESTCHESTER FIRE INSURANCE COMPANY and ACE AMERICAN INSURANCE COMPANY (the "Companies") do hereby certify that

(i) the foregoing Resolutions adopted by the Board of Directors of the Companies are true, correct and in full force and effect,
(ii) the foregoing Power of Attorney is true, correct and in full force and effect.

Given under my hand and seals of said Companies at Whitehouse Station, NJ, this MAY 25, 2022

Dawn M. Chloros
Dawn M. Chloros, Assistant Secretary

IN THE EVENT YOU WISH TO VERIFY THE AUTHENTICITY OF THIS BOND OR NOTIFY US OF ANY OTHER MATTER, PLEASE CONTACT US AT:
Telephone (908) 903-3493 Fax (908) 903-3656 e-mail: surety@chubb.com

VIGILANT INSURANCE COMPANY

STATEMENT OF ASSETS, LIABILITIES AND SURPLUS TO POLICYHOLDERS

Statutory Basis

December 31, 2021

(in thousands)

ASSETS		*LIABILITIES AND SURPLUS TO POLICYHOLDERS*	
Cash and Short Term Investments	$ 2,468	Outstanding Losses and Loss Expenses	$ -
United States Government, State and Municipal Bonds	171,465	Reinsurance Payable on Losses and Expenses	-
Other Bonds	109,479	Unearned Premiums	-
Stocks	-	Ceded Reinsurance Premiums Payable	94,746
Other Invested Assets	-	Other Liabilities	12,223
TOTAL INVESTMENTS	283,412	TOTAL LIABILITIES	106,969
Investments in Affiliates	-	Capital Stock	4,500
Premiums Receivable	79,448	Paid-In Surplus	25,169
Other Assets	98,805	Unassigned Funds	325,027
		SURPLUS TO POLICYHOLDERS	354,696
TOTAL ADMITTED ASSETS	$ 461,665	TOTAL LIABILITIES AND SURPLUS	$ 461,665

Investments are valued in accordance with requirements of the National Association of Insurance Commissioners, At December 31, 2021, investments with a carrying value of $8,987,515 were deposited with government authorities as required by law.

STATE OF PENNSYLVANIA

COUNTY OF PHILADELPHIA

John Taylor, being duly sworn, says that he is Senior Vice President of Vigilant Insurance Company and that to the best of his knowledge and belief the foregoing is a true and correct statement of the said Company's financial condition as of the 31 st day of December, 2021.

Sworn before me this March 16, 2022

Senior Vice President

Jaime L. Yates

Notary Public

September 19, 2023

My commission expires

Commonwealth of Pennsylvania - Notary Seal
Jaime L. Yates, Notary Public
Philadelphia County
My commission expires September 19, 2023
Commission number 1357070

Member, Pennsylvania Association of Notaries

Payment Bond (Pages 108 to 111): Use for any contract for which a Payment Bond is required.

Bond No.015210520/K40260055

PAYMENT BOND

KNOW ALL PERSONS BY THESE PRESENTS, That we, NYCC JPL JV

708 Sharrotts Road

Staten Island, NY 10309

hereinafter referred to as the "Principal", and

Liberty Mutual Insurance Company, 175 Berkeley Street, Boston, MA 02116

& Vigilant Insurance Company, 202B Halls Mill Road, Whitehouse Station, NJ 08889

hereinafter referred to as the "Surety" ("Sureties") are held and firmly bound to THE CITY OF NEW YORK, hereinafter referred to as the "City" or to its successors and assigns, in the penal sum of

One Hundred Fifty-four Million Nine Hundred Ninety-one Thousand Fifty-four And No/100

($154,991,054.00) Dollars, lawful money of the United States, for the payment of which said sum of money well and truly to be made, we, and each of us, bind ourselves, our heirs, executors, administrators, successors and assigns, jointly and severally, firmly by these presents.

WHEREAS, the Principal is about to enter, or has entered, into a Contract in writing with the City for

East Coast Resiliency from Montgomery Street to East 25th Street - SANDRESPC

a copy of which Contract is annexed to and hereby made a part of this bond as though herein set forth in full;

NOW, THEREFORE, the conditions of this obligation are such that if the Principal, his or its representatives or assigns and other Subcontractors to whom Work under this Contract is sublet and his or their successors and assigns shall promptly pay or cause to be paid all lawful claims for

(a) Wages and compensation for labor performed and services rendered by all persons engaged in the prosecution of the Work under said Contract, and any amendment or extension thereof or addition thereto, whether such persons be agents servants or employees of the Principal or any such Subcontractor, including all persons so engaged who perform the work of laborers or mechanics at or in the vicinity of the site

of the Project regardless of any contractual relationship between the Principal or such Subcontractors, or his or their successors or assigns, on the one hand and such laborers or mechanics on the other, but not including office employees not regularly stationed at the site of the project; and

(b) Materials and supplies (whether incorporated in the permanent structure or not), as well as teams, fuels, oils, implements or machinery furnished, used or consumed by said Principal or any subcontractor at or in the vicinity of the site of the Project in the prosecution of the Work under said Contract and any amendment or extension thereof or addition thereto; then this obligation shall be void, otherwise to remain in full force and effect.

This bond is subject to the following additional conditions, limitations and agreements:

(a) The Principal and Surety (Sureties) agree that this bond shall be for the benefit of any materialmen or laborer having a just claim, as well as the City itself.

(b) All persons who have performed labor, rendered services or furnished materials and supplies, as aforesaid, shall have a direct right of action against the Principal and his, its or their successors and assigns, and the Surety (Sureties) herein, or against either or both or any of them and their successors and assigns. Such persons may sue in their own name, and may prosecute the suit to judgment and execution without the necessity of joining with any other persons as party plaintiff.

(c) The Principal and Surety (Sureties) agree that neither of them will hold the City liable for any judgment for costs of otherwise, obtained by either or both of them against a laborer or materialman in a suit brought by either a laborer or materialman under this bond for moneys allegedly due for performing work or furnishing material.

(d) The Surety (Sureties) or its successors and assigns shall not be liable for any compensation recoverable by an employee or laborer under the Workmen's Compensation Law.

(e) In no event shall the Surety (Sureties), or its successors or assigns, be liable for a greater sum than the penalty of this bond or be subject to any suit, action or proceeding hereon that is instituted by any person, firm, or corporation hereunder later than two years after the complete performance of said Contract and final settlement thereof.

The Principal, for himself and his successors and assigns, and the Surety (Sureties), for itself and its successors and assigns, do hereby expressly waive any objection that might be interposed as to the right of the City to require a bond containing the foregoing provisions, and they do hereby further expressly waive any defense which they or either of them might interpose to an action brought hereon by any person, firm or corporation, including subcontractors, materialmen and third persons, for work, labor, services, supplies or material performed rendered, or furnished as aforesaid upon the ground that there is no law authorizing the City to require the foregoing provisions to be place in this bond.

And the Surety (Sureties), for value received, for itself and its successors and assigns, hereby stipulates and agrees that the obligation of said Surety (Sureties), and its bonds shall be in no way impaired or affected by any extension of time, modification, omission, addition, or change in or of the said Contract or the work to be performed thereunder, or by any payment thereunder before the time required therein, or by any waiver of any provisions thereof, or by any assignment, subletting or other transfer thereof or of any part thereof, or of any Work to be performed, or any moneys due to become due thereunder and said Surety (Sureties) does hereby waive notice of any and all of such extensions, modifications, omissions, additions, changes, payments, waivers, assignments, subcontracts and transfers, and hereby expressly stipulates and agrees that any and all things done and omitted to be done by and in relation to assignees, Subcontractors, and other transferees shall have the same effect as to said Surety (Sureties) as though done or omitted to be done or in relation to said Principal.

Payment Bond (Pages 108 to 111): Use for any contract for which a Payment Bond is required.

PAYMENT BOND (Page 3)

IN WITNESS WHEREOF, the Principal and the Surety (Sureties) have hereunto set their hands and seals, and such of them as are corporations have caused their corporate seals to be hereunto affixed and these presents to be signed by their proper officers, this 25th day of May, 2022.

(Seal) NYCC JPL JV (L.S.)
Principal
By: Donna Marie Russo

(Seal) Liberty Mutual Insurance Company
Surety
By:
Loriann P. Fay, Attorney-in-Fact

(Seal) Vigilant Insurance Company
Surety
By:
Thomas Hansson, Attorney-in-Fact

(Seal) _____
Surety
By: _____

(Seal) _____
Surety
By: _____

If the Contractor (Principal) is a partnership, the bond should be signed by each of the individuals who are partners.

If the Contractor (Principal) is a corporation, the bond should be signed in its correct corporate name by a duly authorized officer, agent, or attorney-in-fact.

There should be executed an appropriate number of counterparts of the bond corresponding to the number of counterparts of the Contract.

Payment Bond (Pages 108 to 111): Use for any contract for which a Payment Bond is required.

ACKNOWLEDGMENT OF PRINCIPAL, IF A CORPORATION

State of _____ County of _____ ss:

On this _____ day of _____, _____, before me personally came _____ to me known, who, being by me duly sworn did depose and say that he resides at _____ _____ that he is the _____ of the corporation described in and which executed the foregoing instrument; that he knows the seal of said corporation; that one of the seals affixed to said instrument is such seal; that it was so affixed by order of the directors of said corporation, and that he signed his name thereto by like order.

_____
Notary Public or Commissioner of Deeds

ACKNOWLEDGMENT OF PRINCIPAL, IF A PARTNERSHIP

State of NEW YORK County of RICHMOND ss:

On this 25TH day of MAY, 2022, before me personally appeared Dayna Marie Russo to me known, and known to me to be one of the members of the firm of NYCC/JPL JV _____ described in and who executed the foregoing instrument; and she acknowledged to me that he executed the same as and for the act and deed of said firm.

_____
Notary Public or Commissioner of Deeds

JERRY SICA
Notary Public, State of New York
No. 01SI 4908489
Qualified in Richmond County
Commission Expires Oct. 26, 2025

ACKNOWLEDGMENT OF PRINCIPAL, IF AN INDIVIDUAL

State of _____ County of _____ ss:

On this _____ day of _____, _____, before me personally appeared _____ to me known, and known to me to be the person described in and who executed the foregoing instrument; and acknowledged that he executed the same.

_____
Notary Public or Commissioner of Deeds

Each executed bond should be accompanied by: (a) appropriate acknowledgments of the respective parties; (b) appropriate duly certified copy of Power of Attorney or other certificate of authority where bond is executed by agent, officer or other representative of Principal or Surety; (c) a duly certified extract from By-Laws or resolutions of Surety under which Power of Attorney or other certificate of authority of its agent, officer or representative was issued, and (d) certified copy of latest published financial statement of assets and liabilities of Surety.

* * * * * * * *

Affix Acknowledgments and Justification of Sureties.

SURETY COMPANY'S ACKNOWLEDGMENT

STATE OF New York)

COUNTY OF Suffolk) ss.:

CITY OF East Northport)

On this 25th day of May in the year 2022 before me personally came Loriann P. Fay, to me known, who, being by me duly sworn, did depose and say that he/she/they reside(s) in East Northport, NY, that he/she/they (is) (are) the Attorney-In-Fact duly appointed of the Liberty Mutual Insurance Company the corporation described in and which executed the above instrument; that he/she/they know(s) the seal of said corporation; that the seal affixed to said instrument is such corporate seal; is such corporate seal; that it was so affixed by authority of the board of directors of said corporation, and that he/she/they signed his/her/their name(s) thereto by like authority.

NOTARY PUBLIC

GEOFFREY LESNIAK
Notary Public, State of New York
No. 01LE6376846
Qualified in Kings County
Commission Expires June 18, 2022

This Power of Attorney limits the acts of those named herein, and they have no authority to bind the Company except in the manner and to the extent herein stated.

Liberty Mutual Insurance Company
The Ohio Casualty Insurance Company
West American Insurance Company

Certificate No: 8200197

POWER OF ATTORNEY

KNOWN ALL PERSONS BY THESE PRESENTS: That The Ohio Casualty Insurance Company is a corporation duly organized under the laws of the State of New Hampshire, that Liberty Mutual Insurance Company is a corporation duly organized under the laws of the State of Massachusetts, and West American Insurance Company is a corporation duly organized under the laws of the State of Indiana (herein collectively called the "Companies"), pursuant to and by authority herein set forth, does hereby name, constitute and appoint, Loriann P. Fay

all of the city of Northport state of NY each individually if there be more than one named, its true and lawful attorney-in-fact to make, execute, seal, acknowledge and deliver, for and on its behalf as surety and as its act and deed, any and all undertakings, bonds, recognizances and other surety obligations, in pursuance of these presents and shall be as binding upon the Companies as if they have been duly signed by the president and attested by the secretary of the Companies in their own proper persons.

IN WITNESS WHEREOF, this Power of Attorney has been subscribed by an authorized officer or official of the Companies and the corporate seals of the Companies have been affixed thereto this 31st day of December, 2018.

Liberty Mutual Insurance Company
The Ohio Casualty Insurance Company
West American Insurance Company

By: David M. Carey, Assistant Secretary

State of PENNSYLVANIA
County of MONTGOMERY ss

On this 31st day of December, 2018 before me personally appeared David M. Carey, who acknowledged himself to be the Assistant Secretary of Liberty Mutual Insurance Company, The Ohio Casualty Company, and West American Insurance Company, and that he, as such, being authorized so to do, execute the foregoing instrument for the purposes therein contained by signing on behalf of the corporations by himself as a duly authorized officer.

IN WITNESS WHEREOF, I have hereunto subscribed my name and affixed my notarial seal at King of Prussia, Pennsylvania, on the day and year first above written.

COMMONWEALTH OF PENNSYLVANIA
Notarial Seal
Teresa Pastella, Notary Public
Upper Merion Twp., Montgomery County
My Commission Expires March 28, 2021
Member, Pennsylvania Association of Notaries

By: Teresa Pastella, Notary Public

This Power of Attorney is made and executed pursuant to and by authority of the following By-laws and Authorizations of The Ohio Casualty Insurance Company, Liberty Mutual Insurance Company, and West American Insurance Company which resolutions are now in full force and effect reading as follows:

ARTICLE IV - OFFICERS: Section 12. Power of Attorney.
Any officer or other official of the Corporation authorized for that purpose in writing by the Chairman or the President, and subject to such limitation as the Chairman or the President may prescribe, shall appoint such attorneys-in-fact, as may be necessary to act in behalf of the Corporation to make, execute, seal, acknowledge and deliver as surety any and all undertakings, bonds, recognizances and other surety obligations. Such attorneys-in-fact, subject to the limitations set forth in their respective powers of attorney, shall have full power to bind the Corporation by their signature and execution of any such instruments and to attach thereto the seal of the Corporation. When so executed, such instruments shall be as binding as if signed by the President and attested to by the Secretary. Any power or authority granted to any representative or attorney-in-fact under the provisions of this article may be revoked at any time by the Board, the Chairman, the President or by the officer or officers granting such power or authority.

ARTICLE XIII - Execution of Contracts: Section 5. Surety Bonds and Undertakings.
Any officer of the Company authorized for that purpose in writing by the chairman or the president, and subject to such limitations as the chairman or the president may prescribe, shall appoint such attorneys-in-fact, as may be necessary to act in behalf of the Company to make, execute, seal, acknowledge and deliver as surety any and all undertakings, bonds, recognizances and other surety obligations. Such attorneys-in-fact subject to the limitations set forth in their respective powers of attorney, shall have full power to bind the Company by their signature and execution of any such instruments and to attach thereto the seal of the Company. When so executed such instruments shall be as binding as if signed by the president and attested by the secretary.

Certificate of Designation - The President of the Company, acting pursuant to the Bylaws of the Company, authorizes David M. Carey, Assistant Secretary to appoint such attorneys-in-fact as may be necessary to act on behalf of the Company to make, execute, seal, acknowledge and deliver as surety any and all undertakings, bonds, recognizances and other surety obligations.

Authorization - By unanimous consent of the Company's Board of Directors, the Company consents that facsimile or mechanically reproduced signature of any assistant secretary of the Company, wherever appearing upon a certified copy of any power of attorney issued by the Company in connection with surety bonds, shall be valid and binding upon the Company with the same force and effect as though manually affixed.

I, Renee C. Llewellyn, the undersigned, Assistant Secretary, The Ohio Casualty Insurance Company, Liberty Mutual Insurance Company, and West American Insurance Company do hereby certify that the original power of attorney of which the foregoing is a full, true and correct copy of the Power of Attorney executed by said Companies, is in full force and effect and has not been revoked.

IN TESTIMONY WHEREOF, I have hereunto set my hand and affixed the seals of said Companies this 25th day of May, 2022

By: Renee C. Llewellyn, Assistant Secretary

Not valid for mortgage, note, loan, letter of credit, currency rate, interest rate or residual value guarantees.

To confirm the validity of this Power of Attorney call 1-610-832-8240 between 9:00 am and 4:30 pm EST on any business day.

LIBERTY MUTUAL INSURANCE COMPANY

FINANCIAL STATEMENT — DECEMBER 31, 2020

Assets

Cash and Bank Deposits	$2,058,007,542
*Bonds — U.S Government	2,209,760,437
*Other Bonds	15,902,755,586
*Stocks	18,517,107,230
Real Estate	193,169,809
Agents' Balances or Uncollected Premiums	6,970,170,469
Accrued Interest and Rents	118,399,147
Other Admitted Assets	12,079,597,645
Total Admitted Assets	**$58,048,967,865**

Liabilities

Unearned Premiums		$8,448,706,991
Reserve for Claims and Claims Expense		23,879,216,613
Funds Held Under Reinsurance Treaties		343,068,613
Reserve for Dividends to Policyholders		1,192,716
Additional Statutory Reserve		77,397,000
Reserve for Commissions, Taxes and Other Liabilities		6,279,510,804
Total		**$39,029,092,737**
Special Surplus Funds	$178,155,102	
Capital Stock	10,000,075	
Paid in Surplus	10,945,045,214	
Unassigned Surplus	7,886,674,737	
Surplus to Policyholders		**19,019,875,128**
Total Liabilities and Surplus		**$58,048,967,865**

* Bonds are stated at amortized or investment value; Stocks at Association Market Values.
The foregoing financial information is taken from Liberty Mutual Insurance Company's financial statement filed with the state of Massachusetts Department of Insurance.

I, TIM MIKOLAJEWSKI, Assistant Secretary of Liberty Mutual Insurance Company, do hereby certify that the foregoing is a true, and correct statement of the Assets and Liabilities of said Corporation, as of December 31, 2020, to the best of my knowledge and belief.

IN WITNESS WHEREOF, I have hereunto set my hand and affixed the seal of said Corporation at Seattle, Washington, this 25th day of March, 2021.

Assistant Secretary

Individual Acknowledgment

State of _____
County of _____

On this _____ day of _____, _____, before me personally came _____ and known to me to be the individual described in and who executed the foregoing instrument, and acknowledge to me that he executed the same.

My commission expires: _____ _____
Notary Public

Firm Acknowledgment

State of _____
County of _____

On this _____ day of _____, _____, before me personally came _____ to me known and known to me to be a member of the firm of _____ described in and who executed the foregoing instrument, and he thereupon acknowledged to me that he executed the same as and for the act and deed of said firm.

My commission expires: _____ _____
Notary Public

Corporation Acknowledgment

State of NEW YORK
County of RICHMOND

On this 25TH day of MAY, 2022, before me personally came DONNAMARIE RUSSO, to me known who being by me duly sworn, did depose and say that she is the PRESIDENT of NYCC/JPL JV the corporation described in and which executed the above instrument; that she knows the seal of said corporation; that the seal affixed to said instrument is such corporate seal; that it was so affixed by order of the Board of Directors of said corporation, and that she signed her name thereto by like order.

My commission expires: JERRY SICA
Notary Public, State of New York
No. 01SI 4908489
Qualified in Richmond County
Commission Expires Oct. 26, 2025

_____
Notary Public

Surety Acknowledgment

State of New York
County of New York

On 5/25/2022 before me personally came THOMAS HANSSON to me known, who, being by me duly sworn, did depose and say that he/she is an Attorney-in-Fact of VIGILANT INSURANCE COMPANY the corporation described in and which executed the within instrument; that he/she knows the corporate seal of said corporation; that the seal affixed to the within instrument is such corporate seal, and that he/she signed the said instrument and affixed the said seal as Attorney-in-Fact by authority of the Board of Directors of said corporation and by authority of this office under the Standing Resolutions thereof.

My commission expires: AL CAPPOLLA
Notary Public, State of New York
No. 01CA4890479
Qualified in New York County
Commission Expires April 27, 2023

_____

CHUBB

Power of Attorney

Federal Insurance Company | Vigilant Insurance Company | Pacific Indemnity Company
Westchester Fire Insurance Company | ACE American Insurance Company

Know All by These Presents, that **FEDERAL INSURANCE COMPANY**, an Indiana corporation, **VIGILANT INSURANCE COMPANY**, a New York corporation, **PACIFIC INDEMNITY COMPANY**, a Wisconsin corporation, **WESTCHESTER FIRE INSURANCE COMPANY** and **ACE AMERICAN INSURANCE COMPANY** corporations of the Commonwealth of Pennsylvania, do each hereby constitute and appoint Thomas Hansson of Garden City, New York

each as their true and lawful Attorney-in-Fact to execute under such designation in their names and to affix their corporate seals to and deliver for and on their behalf as surety thereon or otherwise, bonds and undertakings and other writings obligatory in the nature thereof (other than bail bonds) given or executed in the course of business, and any instruments amending or altering the same, and consents to the modification or alteration of any instrument referred to in said bonds or obligations.

In Witness Whereof, said **FEDERAL INSURANCE COMPANY, VIGILANT INSURANCE COMPANY, PACIFIC INDEMNITY COMPANY, WESTCHESTER FIRE INSURANCE COMPANY** and **ACE AMERICAN INSURANCE COMPANY** have each executed and attested these presents and affixed their corporate seals on this **16th** day of **April, 2021.**

Dawn M. Chloros, Assistant Secretary

Stephen M. Haney, Vice President

STATE OF NEW JERSEY
County of Hunterdon ss.

On this **16th** day of **April, 2021** before me, a Notary Public of New Jersey, personally came Dawn M. Chloros and Stephen M. Haney, to me known to be Assistant Secretary and Vice President, respectively, of FEDERAL INSURANCE COMPANY, VIGILANT INSURANCE COMPANY, PACIFIC INDEMNITY COMPANY, WESTCHESTER FIRE INSURANCE COMPANY and ACE AMERICAN INSURANCE COMPANY, the companies which executed the foregoing Power of Attorney, and the said Dawn M. Chloros and Stephen M. Haney, being by me duly sworn, severally and each for herself and himself did depose and say that they are Assistant Secretary and Vice President, respectively, of FEDERAL INSURANCE COMPANY, VIGILANT INSURANCE COMPANY, PACIFIC INDEMNITY COMPANY, WESTCHESTER FIRE INSURANCE COMPANY and ACE AMERICAN INSURANCE COMPANY and know the corporate seals thereof, that the seals affixed to the foregoing Power of Attorney are such corporate seals and were thereto affixed by authority of said Companies; and that their signatures as such officers were duly affixed and subscribed by like authority.

Notarial Seal

KATHERINE J. ADELAAR
NOTARY PUBLIC OF NEW JERSEY
No. 2316685
Commission Expires July 16, 2024

Notary Public

CERTIFICATION

Resolutions adopted by the Boards of Directors of FEDERAL INSURANCE COMPANY, VIGILANT INSURANCE COMPANY, and PACIFIC INDEMNITY COMPANY on August 30, 2016; WESTCHESTER FIRE INSURANCE COMPANY on December 11, 2006; and ACE AMERICAN INSURANCE COMPANY on March 20, 2009:

"RESOLVED, that the following authorizations relate to the execution, for and on behalf of the Company, of bonds, undertakings, recognizances, contracts and other written commitments of the Company entered into in the ordinary course of business (each a "Written Commitment"):

(1) Each of the Chairman, the President and the Vice Presidents of the Company is hereby authorized to execute any Written Commitment for and on behalf of the Company, under the seal of the Company or otherwise.

(2) Each duly appointed attorney-in-fact of the Company is hereby authorized to execute any Written Commitment for and on behalf of the Company, under the seal of the Company or otherwise, to the extent that such action is authorized by the grant of powers provided for in such person's written appointment as such attorney-in-fact.

(3) Each of the Chairman, the President and the Vice Presidents of the Company is hereby authorized, for and on behalf of the Company, to appoint in writing any person the attorney-in-fact of the Company with full power and authority to execute, for and on behalf of the Company, under the seal of the Company or otherwise, such Written Commitments of the Company as may be specified in such written appointment, which specification may be by general type or class of Written Commitments or by specification of one or more particular Written Commitments.

(4) Each of the Chairman, the President and the Vice Presidents of the Company is hereby authorized, for and on behalf of the Company, to delegate in writing to any other officer of the Company the authority to execute, for and on behalf of the Company, under the Company's seal or otherwise, such Written Commitments of the Company as are specified in such written delegation, which specification may be by general type or class of Written Commitments or by specification of one or more particular Written Commitments.

(5) The signature of any officer or other person executing any Written Commitment or appointment or delegation pursuant to this Resolution, and the seal of the Company, may be affixed by facsimile on such Written Commitment or written appointment or delegation.

FURTHER RESOLVED, that the foregoing Resolution shall not be deemed to be an exclusive statement of the powers and authority of officers, employees and other persons to act for and on behalf of the Company, and such Resolution shall not limit or otherwise affect the exercise of any such power or authority otherwise validly granted or vested."

I, Dawn M. Chloros, Assistant Secretary of FEDERAL INSURANCE COMPANY, VIGILANT INSURANCE COMPANY, PACIFIC INDEMNITY COMPANY, WESTCHESTER FIRE INSURANCE COMPANY and ACE AMERICAN INSURANCE COMPANY (the "Companies") do hereby certify that

(i) the foregoing Resolutions adopted by the Board of Directors of the Companies are true, correct and in full force and effect,
(ii) the foregoing Power of Attorney is true, correct and in full force and effect.

Given under my hand and seals of said Companies at Whitehouse Station, NJ, this MAY 25, 2022

Dawn M. Chloros, Assistant Secretary

IN THE EVENT YOU WISH TO VERIFY THE AUTHENTICITY OF THIS BOND OR NOTIFY US OF ANY OTHER MATTER, PLEASE CONTACT US AT:
Telephone (908) 903-3493 Fax (908) 903-3656 e-mail: surety@chubb.com

VIGILANT INSURANCE COMPANY

STATEMENT OF ASSETS, LIABILITIES AND SURPLUS TO POLICYHOLDERS

Statutory Basis

December 31, 2021

(in thousands)

ASSETS		*LIABILITIES AND SURPLUS TO POLICYHOLDERS*	
Cash and Short Term Investments	$ 2,468	Outstanding Losses and Loss Expenses	$ -
United States Government, State and Municipal Bonds	171,465	Reinsurance Payable on Losses and Expenses	-
Other Bonds	109,479	Unearned Premiums	-
Stocks	-	Ceded Reinsurance Premiums Payable	94,746
Other Invested Assets	-	Other Liabilities	12,223
TOTAL INVESTMENTS	283,412	TOTAL LIABILITIES	106,969
Investments in Affiliates	-	Capital Stock	4,500
Premiums Receivable	79,448	Paid-In Surplus	25,169
Other Assets	98,805	Unassigned Funds	325,027
		SURPLUS TO POLICYHOLDERS	354,696
TOTAL ADMITTED ASSETS	$ 461,665	TOTAL LIABILITIES AND SURPLUS	$ 461,665

Investments are valued in accordance with requirements of the National Association of Insurance Commissioners, At December 31, 2021, investments with a carrying value of $8,967,515 were deposited with government authorities as required by law.

STATE OF PENNSYLVANIA

COUNTY OF PHILADELPHIA

John Taylor, being duly sworn, says that he is Senior Vice President of Vigilant Insurance Company and that to the best of his knowledge and belief the foregoing is a true and correct statement of the said Company's financial condition as of the 31 st day of December, 2021.

Sworn before me this March 16, 2022

Senior Vice President

Jaime L. Yates

Notary Public

September 19, 2023

My commission expires

Commonwealth of Pennsylvania - Notary Seal
Jaime L. Yates, Notary Public
Philadelphia County
My commission expires September 19, 2023
Commission number 1357070

Member, Pennsylvania Association of Notaries

ACORD®

CERTIFICATE OF LIABILITY INSURANCE

DATE (MM/DD/YYYY) 5/26/2022

THIS CERTIFICATE IS ISSUED AS A MATTER OF INFORMATION ONLY AND CONFERS NO RIGHTS UPON THE CERTIFICATE HOLDER. THIS CERTIFICATE DOES NOT AFFIRMATIVELY OR NEGATIVELY AMEND, EXTEND OR ALTER THE COVERAGE AFFORDED BY THE POLICIES BELOW. THIS CERTIFICATE OF INSURANCE DOES NOT CONSTITUTE A CONTRACT BETWEEN THE ISSUING INSURER(S), AUTHORIZED REPRESENTATIVE OR PRODUCER, AND THE CERTIFICATE HOLDER.

IMPORTANT: If the certificate holder is an ADDITIONAL INSURED, the policy(ies) must have ADDITIONAL INSURED provisions or be endorsed. If SUBROGATION IS WAIVED, subject to the terms and conditions of the policy, certain policies may require an endorsement. A statement on this certificate does not confer rights to the certificate holder in lieu of such endorsement(s).

PRODUCER
American Global
390 North Broadway
Jericho NY 11753

CONTACT NAME: Michelle Skala
PHONE (A/C, No, Ext): 516-387-1170 FAX (A/C, No):
E-MAIL ADDRESS: info@americanglobal.com

INSURER(S) AFFORDING COVERAGE	NAIC #
INSURER A : Navigators Insurance Company	42307
INSURER B : Westfield Specialty Insurance Company	16992
INSURER C : Homesite Insurance Company	17221
INSURER D : Allied World Surplus Lines Insurance Co	24319
INSURER E : Allied World Specialty Insurance Company	16624
INSURER F : American Empire Surplus Lines Insurance	35351

INSURED NYCONCR-01
NYCC JPL JV
708 Sharrotts Road
Staten Island NY 10309

COVERAGES **CERTIFICATE NUMBER:** 1394088826 **REVISION NUMBER:**

THIS IS TO CERTIFY THAT THE POLICIES OF INSURANCE LISTED BELOW HAVE BEEN ISSUED TO THE INSURED NAMED ABOVE FOR THE POLICY PERIOD INDICATED. NOTWITHSTANDING ANY REQUIREMENT, TERM OR CONDITION OF ANY CONTRACT OR OTHER DOCUMENT WITH RESPECT TO WHICH THIS CERTIFICATE MAY BE ISSUED OR MAY PERTAIN, THE INSURANCE AFFORDED BY THE POLICIES DESCRIBED HEREIN IS SUBJECT TO ALL THE TERMS, EXCLUSIONS AND CONDITIONS OF SUCH POLICIES. LIMITS SHOWN MAY HAVE BEEN REDUCED BY PAID CLAIMS.

INSR LTR	TYPE OF INSURANCE	ADDL INSD	SUBR WVD	POLICY NUMBER	POLICY EFF (MM/DD/YYYY)	POLICY EXP (MM/DD/YYYY)	LIMITS	
D	X COMMERCIAL GENERAL LIABILITY			6004-1242	5/25/2022	5/25/2023	EACH OCCURRENCE	$ 1,000,000
	CLAIMS-MADE X OCCUR						DAMAGE TO RENTED PREMISES (Ea occurrence)	$ 100,000
							MED EXP (Any one person)	$ 5,000
							PERSONAL & ADV INJURY	$ 1,000,000
	GEN'L AGGREGATE LIMIT APPLIES PER:						GENERAL AGGREGATE	$ 2,000,000
	POLICY X PRO-JECT LOC						PRODUCTS - COMP/OP AGG	$ 2,000,000
	OTHER:							$
E	AUTOMOBILE LIABILITY			6000-1391	5/25/2022	5/25/2023	COMBINED SINGLE LIMIT (Ea accident)	$ 1,000,000
	ANY AUTO						BODILY INJURY (Per person)	$
	OWNED AUTOS ONLY / SCHEDULED AUTOS						BODILY INJURY (Per accident)	$
	X HIRED AUTOS ONLY / X NON-OWNED AUTOS ONLY						PROPERTY DAMAGE (Per accident)	$
								$
F	UMBRELLA LIAB X OCCUR			XS E853873	5/25/2022	5/25/2023	EACH OCCURRENCE	$ 4,000,000
	X EXCESS LIAB CLAIMS-MADE						AGGREGATE	$
	DED X RETENTION $ 10,000							$
	WORKERS COMPENSATION AND EMPLOYERS' LIABILITY Y / N						PER STATUTE / OTH-ER	
	ANYPROPRIETOR/PARTNER/EXECUTIVE OFFICER/MEMBER EXCLUDED? (Mandatory in NH)	N / A					E.L. EACH ACCIDENT	$
	If yes, describe under DESCRIPTION OF OPERATIONS below						E.L. DISEASE - EA EMPLOYEE	$
							E.L. DISEASE - POLICY LIMIT	$
A	Excess Liability			NY22EXCZ0B6APIV	5/25/2022	5/25/2023	Per Occ/Aggregate	$6,000,000
B	Excess Liability			XSL-00012F9	5/25/2022	5/25/2023	Per Occ/Aggregate	$10M p/o $40M
C	Excess Liability			CPX-006067-00	5/25/2022	5/25/2023	Per Occ/Aggregate	$10M p/o $40M

DESCRIPTION OF OPERATIONS / LOCATIONS / VEHICLES (ACORD 101, Additional Remarks Schedule, may be attached if more space is required)
East Coast Resiliency Project #SANDRESPC. E-Pin: 85021B0117001
City of New Yok, including its officials and employees; U.S. Department of Housing and Urban Development (HUD), including its officials and employees; New York City Housing Authority (NYCHA), including its officials and employees; New York City Economic Development Corporation (EDC), including its officials and employees; Con Edison, Inc.; New York City Transit Authority (NYCTA), the Manhattan and Bronx Surface Transit Operating Authority (MaBSTOA), the Staten Island Rapid Transit Operating Authority (SIRTOA), MTA Capital Construction Co., MTA Capital Transportation Authority (MTA) including its subsidiaries and affiliates; East River Housing Corporation (ERH) and Lower East Side Ecology Center are included as Additional Insured in accordance with the policy provisions of the General Liability, Auto Liability and Excess Liability Policies. General Liability, Auto Liability and Excess Liability Policies evidenced herein are Primary Non-Contributory to other insurance available to the Additional insureds, but only in accordance with the Policy Provisions.
See Attached...

CERTIFICATE HOLDER

NYC Department of Design and Construction
30-30 Thomson Ave
4th floor
Long Island City NY 11101

CANCELLATION

SHOULD ANY OF THE ABOVE DESCRIBED POLICIES BE CANCELLED BEFORE THE EXPIRATION DATE THEREOF, NOTICE WILL BE DELIVERED IN ACCORDANCE WITH THE POLICY PROVISIONS.

AUTHORIZED REPRESENTATIVE
American Global LLC

© 1988-2015 ACORD CORPORATION. All rights reserved.

The ACORD name and logo are registered marks of ACORD

AGENCY CUSTOMER ID: NYCONCR-01

LOC #:

ADDITIONAL REMARKS SCHEDULE

AGENCY	NAMED INSURED
American Global	NYCC JPL JV 708 Sharrotts Road Staten Island NY 10309
POLICY NUMBER	
CARRIER / NAIC CODE	EFFECTIVE DATE:

ADDITIONAL REMARKS

THIS ADDITIONAL REMARKS FORM IS A SCHEDULE TO ACORD FORM,

FORM NUMBER: 25 FORM TITLE: CERTIFICATE OF LIABILITY INSURANCE

Excess Liability
Policy #: AEC 4446936-00
Carrier: Steadfast Insurance Company
Term: 5/25/22 to 5/25/23
Per Occ/Aggregate: $10M p/o $40M

Excess Liability
Policy #: AR6461787
Carrier: Colony Insurance Company
Term: 5/25/22 to 5/25/23
Per Occ/Aggregate: $10M p/o $40M

© 2008 ACORD CORPORATION. All rights reserved.
The ACORD name and logo are registered marks of ACORD

CITY OF NEW YORK

CERTIFICATION BY INSURANCE BROKER OR AGENT

The undersigned insurance broker or agent represents to the City of New York that the attached Certificate of Insurance is accurate in all material respects.

American Global LLC

[Name of broker or agent (typewritten)]

390 North Broadway, Jericho, NY 11753

[Address of broker or agent (typewritten)]

Jennifer.Neidle@americanglobal.com

[Email address of broker or agent (typewritten)]

516-387-1170

[Phone number/Fax number of broker or agent (typewritten)]

[Signature of authorized official, broker, or agent]

Jennifer Neidle, Account Manager

[Name and title of authorized official, broker, or agent (typewritten)]

State of New York.....)
) ss.:
County of Nassau.....)

Sworn to before me this 26 day of May 2022

NOTARY PUBLIC FOR THE STATE OF New York

PARASKEVI DALOSIS
Notary Public - State of New York
NO. 01DA6411206
Qualified in Suffolk County
My Commission Expires Nov 9, 2024

NYSIF
New York State Insurance Fund

PO Box 66699, Albany, NY 12206
| nysif.com

CERTIFICATE OF WORKERS' COMPENSATION INSURANCE

^ ^ ^ ^ ^ ^ 823633182
NYCC JPL JV - A JOINT VENTURE
2400 EAST 69 STREET
BROOKLYN NY 11234

SCAN TO VALIDATE
AND SUBSCRIBE

POLICYHOLDER	CERTIFICATE HOLDER
NYCC JPL JV - A JOINT VENTURE 708 Sharrotts Road STATEN ISLAND NY 10309	NYC DDC 30-30 THOMSON AVE 4 FLOOR LONG ISLAND CITY NY 11101

POLICY NUMBER	CERTIFICATE NUMBER	POLICY PERIOD	DATE
K2495 958-7	948194	12/04/2021 TO 12/04/2022	5/25/2022

THIS IS TO CERTIFY THAT THE POLICYHOLDER NAMED ABOVE IS INSURED WITH THE NEW YORK STATE INSURANCE FUND UNDER POLICY NO. 2495 958-7, COVERING THE ENTIRE OBLIGATION OF THIS POLICYHOLDER FOR WORKERS' COMPENSATION UNDER THE NEW YORK WORKERS' COMPENSATION LAW WITH RESPECT TO ALL OPERATIONS IN THE STATE OF NEW YORK, EXCEPT AS INDICATED BELOW, AND, WITH RESPECT TO OPERATIONS OUTSIDE OF NEW YORK, TO THE POLICYHOLDER'S REGULAR NEW YORK STATE EMPLOYEES ONLY.

IF YOU WISH TO RECEIVE NOTIFICATIONS REGARDING SAID POLICY, INCLUDING ANY NOTIFICATION OF CANCELLATIONS, OR TO VALIDATE THIS CERTIFICATE, VISIT OUR WEBSITE AT HTTPS://WWW.NYSIF.COM/CERT/CERTVAL.ASP. THE NEW YORK STATE INSURANCE FUND IS NOT LIABLE IN THE EVENT OF FAILURE TO GIVE SUCH NOTIFICATIONS.

THIS CERTIFICATE IS ISSUED AS A MATTER OF INFORMATION ONLY AND CONFERS NO RIGHTS NOR INSURANCE COVERAGE UPON THE CERTIFICATE HOLDER. THIS CERTIFICATE DOES NOT AMEND, EXTEND OR ALTER THE COVERAGE AFFORDED BY THE POLICY.

NEW YORK STATE INSURANCE FUND

DIRECTOR,INSURANCE FUND UNDERWRITING

VALIDATION NUMBER: 579052481

U-26.3

NEW YORK STATE | Workers' Compensation Board

CERTIFICATE OF INSURANCE COVERAGE
DISABILITY AND PAID FAMILY LEAVE BENEFITS LAW

PART 1. To be completed by Disability and Paid Family Leave Benefits Carrier or Licensed Insurance Agent of that Carrier

1a. Legal Name & Address of Insured (use street address only)
J.PIZZIRUSSO LANDSCAPING CORP
2400 EAST 69 STREET
BROOKLYN, NY 11234

Work Location of Insured *(Only required if coverage is specifically limited to certain locations in New York State, i.e., Wrap-Up Policy)*
Contract #SANDRESPC

1b. Business Telephone Number of Insured
7185316084

1c. Federal Employer Identification Number of Insured or Social Security Number
11-3539578

2. Name and Address of Entity Requesting Proof of Coverage (Entity Being Listed as the Certificate Holder)
NYC Department of Design and Construction
30-30 Thomson Ave
4 floor
Long Island City, NY 11101

3a. Name of Insurance Carrier
Standard Security Life Insurance Company of New York

3b. Policy Number of Entity Listed in Box "1a"
D35965-000

3c. Policy effective period
1/1/2001 to 5/24/2023

4. Policy provides the following benefits:
- [x] A. Both disability and paid family leave benefits.
- [ ] B. Disability benefits only.
- [ ] C. Paid family leave benefits only.

5. Policy covers:
- [x] A. All of the employer's employees eligible under the NYS Disability and Paid Family Leave Benefits Law.
- [ ] B. Only the following class or classes of employer's employees:

Under penalty of perjury, I certify that I am an authorized representative or licensed agent of the insurance carrier referenced above and that the named insured has NYS Disability and/or Paid Family Leave Benefits insurance coverage as described above.

Date Signed 5/25/2022 By _____
(Signature of insurance carrier's authorized representative or NYS Licensed Insurance Agent of that insurance carrier)

Telephone Number (212) 355-4141 Name and Title SUPERVISOR-DBL/POLICY SERVICES

IMPORTANT: If Boxes 4A and 5A are checked, and this form is signed by the insurance carrier's authorized representative or NYS Licensed Insurance Agent of that carrier, this certificate is COMPLETE. Mail it directly to the certificate holder.

If Box 4B, 4C or 5B is checked, this certificate is NOT COMPLETE for purposes of Section 220, Subd. 8 of the NYS Disability and Paid Family Leave Benefits Law. It must be mailed for completion to the Workers' Compensation Board, Plans Acceptance Unit, PO Box 5200, Binghamton, NY 13902-5200.

PART 2. To be completed by the NYS Workers' Compensation Board (Only if Box 4C or 5B of Part 1 has been checked)

State of New York
Workers' Compensation Board

According to information maintained by the NYS Workers' Compensation Board, the above-named employer has complied with the NYS Disability and Paid Family Leave Benefits Law with respect to all of his/her employees.

Date Signed _____ By _____
(Signature of Authorized NYS Workers' Compensation Board Employee)

Telephone Number _____ Name and Title _____

Please Note: *Only insurance carriers licensed to write NYS disability and paid family leave benefits insurance policies and NYS licensed insurance agents of those insurance carriers are authorized to issue Form DB-120.1.* ***Insurance brokers are NOT authorized to issue this form.***

Additional Instructions for Form DB-120.1

By signing this form, the insurance carrier identified in Box 3 on this form is certifying that it is insuring the business referenced in box "1a" for disability and/or paid family leave benefits under the New York State Disability and Paid Family Leave Benefits Law. The Insurance Carrier or its licensed agent will send this Certificate of Insurance to the entity listed as the certificate holder in Box 2.

The insurance carrier must notify the above certificate holder and the Workers' Compensation Board within 10 days IF a policy is cancelled due to nonpayment of premiums or within 30 days IF there are reasons other than nonpayment of premiums that cancel the policy or eliminate the insured from coverage indicated on this Certificate. (These notices my be sent by regular mail.) Otherwise, this Certificate is valid for one year after this form is approved by the insurance carrier or its licensed agent, or until the policy expiration date listed in Box 3c, whichever is earlier

This certificate is issued as a matter of information only and confers no rights upon the certificate holder. This certificate does not amend, extend or alter the coverage afforded by the policy listed, nor does it confer any rights or responsibilities beyond those contained in the referenced policy.

This certificate may be used as evidence of a Disability and/or Paid Family Leave Benefits contract of insurance only while the underlying policy is in effect.

Please Note: Upon the cancellation of the disability and/or paid family leave benefits policy indicated on this form, if the business continues to be named on a permit, license or contract issued by a certificate holder, the business must provide that certificate holder with a new Certificate of NYS Disability and/or Paid Family Leave Benefits Coverage or other authorized proof that the business is complying with the mandatory coverage requirements of the New York State Disability and Paid Family Leave Benefits Law.

DISABILITY AND PAID FAMILY LEAVE BENEFITS LAW

§220. Subd. 8

(a) The head of a state or municipal department, board, commission or office authorized or required by law to issue any permit for or in connection with any work involving the employment of employees in employment as defined in this article, and not withstanding any general or special statute requiring or authorizing the issue of such permits, shall not issue such permit unless proof duly subscribed by an insurance carrier is produced in a form satisfactory to the chair, that the payment of disability benefits and after January first, two thousand and twenty-one, the payment of family leave benefits for all employees has been secured as provided by this article. Nothing herein, however, shall be construed as creating any liability on the part of such state or municipal department, board, commission or office to pay any disability benefits to any such employee if so employed.

(b) The head of a state or municipal department, board, commission or office authorized or required by law to enter into any contract for or in connection with any work involving the employment of employees in employment as defined in this article and notwithstanding any general or special statute requiring or authorizing any such contract, shall not enter into any such contract unless proof duly subscribed by an insurance carrier is produced in a form satisfactory to the chair, that the payment of disability benefits and after January first, two thousand eighteen, the payment of family leave benefits for all employees has been secured as provided by this article.

NEW YORK STATE | Workers' Compensation Board

CERTIFICATE OF INSURANCE COVERAGE
NYS DISABILITY AND PAID FAMILY LEAVE BENEFITS LAW

PART 1. To be completed by NYS disability and Paid Family Leave benefits carrier or licensed insurance agent of that carrier

1a. Legal Name & Address of Insured (use street address only)
NEW YORK CONCRETE CORP

708 SHARROTTS ROAD
STATEN ISLAND, NY 10309

Work Location of Insured *(Only required if coverage is specifically limited to certain locations in New York State, i.e., Wrap-Up Policy)*

1b. Business Telephone Number of Insured
718-967-3720

1c. Federal Employer Identification Number of Insured or Social Security Number
113076836

2. Name and Address of Entity Requesting Proof of Coverage (Entity Being Listed as the Certificate Holder)
NYC Department of Design and Construction
30-30 Thomson Ave., 4th Floor
Long Island City, NY 11101
Contract #SANDRESPC

3a. Name of Insurance Carrier
ShelterPoint Life Insurance Company

3b. Policy Number of Entity Listed in Box "1a"
DBL128291

3c. Policy effective period
04/01/2022 to 03/31/2023

4. Policy provides the following benefits:
- [x] A. Both disability and paid family leave benefits.
- [ ] B. Disability benefits only.
- [ ] C. Paid family leave benefits only.

5. Policy covers:
- [ ] A. All of the employer's employees eligible under the NYS Disability and Paid Family Leave Benefits Law.
- [x] B. Only the following class or classes of employer's employees:
ALL EMPLOYEES EXCEPT MEMBERS OF MASONS,LABORORERS,LOCAL 15 ENGINEERS,LOCAL14 ENGINEERS,METAL LATHERS,CARPENTERS,& LOCAL 282 TEAMSTERS

Under penalty of perjury, I certify that I am an authorized representative or licensed agent of the insurance carrier referenced above and that the named insured has NYS Disability and/or Paid Family Leave Benefits insurance coverage as described above.

Date Signed 5/26/2022 By _____
(Signature of insurance carrier's authorized representative or NYS Licensed Insurance Agent of that insurance carrier)

Telephone Number 516-829-8100 Name and Title Richard White, Chief Executive Officer

IMPORTANT: If Boxes 4A and 5A are checked, and this form is signed by the insurance carrier's authorized representative or NYS Licensed Insurance Agent of that carrier, this certificate is COMPLETE. Mail it directly to the certificate holder.

If Box 4B, 4C or 5B is checked, this certificate is NOT COMPLETE for purposes of Section 220, Subd. 8 of the NYS Disability and Paid Family Leave Benefits Law. It must be emailed to PAU@wcb.ny.gov or it can be mailed for completion to the Workers' Compensation Board, Plans Acceptance Unit, PO Box 5200, Binghamton, NY 13902-5200.

PART 2. To be completed by the NYS Workers' Compensation Board (Only if Box 4B, 4C or 5B have been checked)

State of New York
Workers' Compensation Board

According to information maintained by the NYS Workers' Compensation Board, the above-named employer has complied with the NYS Disability and Paid Family Leave Benefits Law(Article 9 of the Workers' Compensation Law) with respect to all of their employees.

Date Signed _____ By _____
(Signature of Authorized NYS Workers' Compensation Board Employee)

Telephone Number _____ Name and Title _____

Please Note: *Only insurance carriers licensed to write NYS disability and paid family leave benefits insurance policies and NYS licensed insurance agents of those insurance carriers are authorized to issue Form DB-120.1.* ***Insurance brokers are NOT authorized to issue this form.***

Additional Instructions for Form DB-120.1

By signing this form, the insurance carrier identified in Box 3 on this form is certifying that it is insuring the business referenced in Box 1a for disability and/or Paid Family Leave benefits under the NYS Disability and Paid Family Leave Benefits Law. The insurance carrier or its licensed agent will send this Certificate of Insurance Coverage (Certificate) to the entity listed as the certificate holder in Box 2.

The insurance carrier must notify the above certificate holder and the Workers' Compensation Board within 10 days IF a policy is cancelled due to nonpayment of premiums or within 30 days IF there are reasons other than nonpayment of premiums that cancel the policy or eliminate the insured from coverage indicated on this Certificate. (These notices may be sent by regular mail.) Otherwise, this Certificate is valid for one year after this form is approved by the insurance carrier or its licensed agent, or until the policy expiration date listed in Box 3c, whichever is earlier.

This Certificate is issued as a matter of information only and confers no rights upon the certificate holder. This Certificate does not amend, extend or alter the coverage afforded by the policy listed, nor does it confer any rights or responsibilities beyond those contained in the referenced policy.

This Certificate may be used as evidence of a NYS disability and/or Paid Family Leave benefits contract of insurance only while the underlying policy is in effect.

Please Note: Upon the cancellation of the disability and/or Paid Family Leave benefits policy indicated on this form, if the business continues to be named on a permit, license or contract issued by a certificate holder, the business must provide that certificate holder with a new Certificate of Insurance Coverage for NYS disability and/ or Paid Family Leave Benefits or other authorized proof that the business is complying with the mandatory coverage requirements of the NYS Disability and Paid Family Leave Benefits Law.

NYS DISABILITY AND PAID FAMILY LEAVE BENEFITS LAW

§220. Subd. 8

(a) The head of a state or municipal department, board, commission or office authorized or required by law to issue any permit for or in connection with any work involving the employment of employees in employment as defined in this article, and not withstanding any general or special statute requiring or authorizing the issue of such permits, shall not issue such permit unless proof duly subscribed by an insurance carrier is produced in a form satisfactory to the chair, that the payment of disability benefits and after January first, two thousand and twenty-one, the payment of family leave benefits for all employees has been secured as provided by this article. Nothing herein, however, shall be construed as creating any liability on the part of such state or municipal department, board, commission or office to pay any disability benefits to any such employee if so employed.

(b) The head of a state or municipal department, board, commission or office authorized or required by law to enter into any contract for or in connection with any work involving the employment of employees in employment as defined in this article and notwithstanding any general or special statute requiring or authorizing any such contract, shall not enter into any such contract unless proof duly subscribed by an insurance carrier is produced in a form satisfactory to the chair, that the payment of disability benefits and after January first, two thousand eighteen, the payment of family leave benefits for all employees has been secured as provided by this article.

(NO TEXT ON THIS PAGE)

LABOR LAW ARTICLE 8 - NYC PUBLIC WORKS

Workers, Laborers and Mechanics employed on a public work project must receive not less than the prevailing rate of wage and benefits for the classification of work performed by each upon such public work. Pursuant to New York Labor Law Article 8 the Comptroller of the City of New York has promulgated this schedule solely for Workers, Laborers and Mechanics engaged by private contractors on New York City public work projects. Prevailing rates are required to be annexed to and form part of the public work contract pursuant to Labor Law section 220 (3).

This schedule is a compilation of separate determinations of the prevailing rate of wage and supplements made by the Comptroller for each trade classification listed herein pursuant to Labor Law section 220 (5). The source of the wage and supplement rates, whether a collective bargaining agreement, survey data or other, is listed at the end of each classification.

Agency Chief Contracting Officers should contact the Bureau of Labor Law's Classification Unit with any questions concerning trade classifications, prevailing rates or prevailing practices with respect to procurement on New York City public work contracts. Contractors are advised to review the Comptroller's Prevailing Wage Schedule before bidding on public work contracts. Contractors with questions concerning trade classifications, prevailing rates or prevailing practices with respect to public work contracts in the procurement stage must contact the contracting agency responsible for the procurement.

Any error as to compensation under the prevailing wage law or other information as to trade classification, made by the contracting agency in the contract documents or in any other communication, will not preclude a finding against the contractor of prevailing wage violation.

Any questions concerning trade classifications, prevailing rates or prevailing practices on New York City public work contracts that have already been awarded may be directed to the Bureau of Labor Law's Classification Unit by calling (212) 669-4443. All callers must have the agency name and contract registration number available when calling with questions on public work contracts. Please direct all other compliance issues to: Bureau of Labor Law, Attn: Wasyl Kinach, P.E., Office of the Comptroller, 1 Centre Street, Room 651, New York, N.Y. 10007; Fax (212) 669-4002.

Pursuant to Labor Law § 220 (3-a) (a), the appropriate schedule of prevailing wages and benefits must be posted in a prominent and accessible place at all public work sites along with the Construction Poster provided on our web site at comptroller.nyc.gov/wages. In addition, covered employees must be given the appropriate schedule of prevailing wages and benefits along with the Worker Notice provided on our web site at the time the public work project begins, and with the first paycheck to each such employee after July first of each year.

This schedule is applicable to work performed during the effective period, unless otherwise noted. Changes to this schedule are published on our web site comptroller.nyc.gov/wages. Contractors must pay the wages and supplements in effect when the worker, laborer, mechanic performs the work. Preliminary schedules for future one-year periods appear in the City Record on or about June 1 each succeeding year. Final schedules appear on or about July 1 in the City Record and on our web site comptroller.nyc.gov/wages.

Prevailing rates and ratios for apprentices are published in the Construction Apprentice Prevailing Wage Schedule. Pursuant to Labor Law § 220 (3-e), only apprentices who are individually registered in a bona fide program to which the employer contractor is a participant, registered with the

New York State Department of Labor, may be paid at the apprentice rates. Apprentices who are not so registered must be paid as journey persons.

New York City public work projects awarded pursuant to a Project Labor Agreement ("PLA") in accordance with Labor Law section 222 may have different labor standards for shift, premium and overtime work. Please refer to the PLA's pre-negotiated labor agreements for wage and benefit rates applicable to work performed outside of the regular workday. More information is available at the Mayor's Office of Contract Services (MOCS) web page at:

https://www1.nyc.gov/site/mocs/legal-forms/project-labor-agreements.page

All the provisions of Labor Law Article 8 remain applicable to PLA work including, but not limited to, the enforcement of prevailing wage requirements by the Comptroller in accordance with the trade classifications in this schedule; however, we will enforce shift, premium, overtime and other non-standard rates as they appear in a project's pre-negotiated labor agreement.

In order to meet their obligation to provide prevailing supplemental benefits to each covered employee, employers must either:

1) **Provide bona fide fringe benefits which cost the employer no less than the prevailing supplemental benefits rate; or**
2) **Supplement the employee's hourly wage by an amount no less than the prevailing supplemental benefits rate; or**
3) **Provide a combination of bona fide fringe benefits and wage supplements which cost the employer no less than the prevailing supplemental benefits rate in total.**

Although prevailing wage laws do not require employers to provide bona fide fringe benefits (as opposed to wage supplements) to their employees, other laws may. For example, the Employee Retirement Income Security Act, 29 U.S.C. § 1001 et seq., the Patient Protection and Affordable Care Act, 42 U.S.C. § 18001 et seq., and the New York City Paid Sick Leave Law, N.Y.C. Admin. Code § 20-911 et seq., require certain employers to provide certain benefits to their employees. Labor agreements to which employers are a party may also require certain benefits. The Comptroller's Office does not enforce these laws or agreements.

Employers must provide prevailing supplemental benefits at the straight time rate for each hour worked unless otherwise noted in the classification.

Paid Holidays, Vacation and Sick Leave when listed must be paid or provided in addition to the prevailing hourly supplemental benefit rate.

For more information, please refer to the Comptroller's Prevailing Wage Law Regulations in Title 44 of the Rules of the City of New York, Chapter 2, available at comptroller.nyc.gov/wages.

Wasyl Kinach, P.E.
Director of Classifications
Bureau of Labor Law

TABLE OF CONTENTS

CLASSIFICATION	PAGE
ASBESTOS HANDLER	5
BLASTER	5
BOILERMAKER	6
BRICKLAYER	7
CARPENTER - BUILDING COMMERCIAL	8
CARPENTER - HEAVY CONSTRUCTION WORK	9
CARPENTER - HIGH RISE CONCRETE FORMS	10
CARPENTER - SIDEWALK SHED, SCAFFOLD AND HOIST	11
CARPENTER - WOOD WATER STORAGE TANK	12
CEMENT & CONCRETE WORKER	13
CEMENT MASON	14
CORE DRILLER	14
DERRICKPERSON AND RIGGER	16
DIVER	17
DOCKBUILDER - PILE DRIVER	18
DRIVER: TRUCK (TEAMSTER)	19
ELECTRICIAN - ALARM TECHNICIAN	24
ELEVATOR CONSTRUCTOR	26
ELEVATOR REPAIR & MAINTENANCE	27
ENGINEER	28
ENGINEER - CITY SURVEYOR AND CONSULTANT	33
ENGINEER - FIELD (BUILDING CONSTRUCTION)	34
ENGINEER - FIELD (HEAVY CONSTRUCTION)	35
ENGINEER - FIELD (STEEL ERECTION)	36
ENGINEER - OPERATING	37
FLOOR COVERER	45
GLAZIER	45
GLAZIER - REPAIR & MAINTENANCE	46
HAZARDOUS MATERIAL HANDLER	47
HEAT AND FROST INSULATOR	48
HOUSE WRECKER	49
IRON WORKER - ORNAMENTAL	50
IRON WORKER - STRUCTURAL	51
LABORER	52
LANDSCAPING	52

MARBLE MECHANIC 54
MASON TENDER 55
MASON TENDER (INTERIOR DEMOLITION WORKER) 56
METALLIC LATHER 57
MILLWRIGHT 58
MOSAIC MECHANIC 59
PAINTER 60
PAINTER - LINE STRIPING (ROADWAY) 60
PAINTER - METAL POLISHER 62
PAINTER - SIGN 63
PAINTER - STRUCTURAL STEEL 64
PAPERHANGER 65
PAVER AND ROADBUILDER 66
PLASTERER 68
PLASTERER - TENDER 69
PLUMBER 69
PLUMBER (MECHNICAL EQUIPMENT AND SERVICE) 70
PLUMBER (RESIDENTIAL RATES FOR 1, 2 AND 3 FAMILY HOME CONSTRUCTION) 71
PLUMBER: PUMP & TANK 72
POINTER, WATERPROOFER, CAULKER, SANDBLASTER, STEAMBLASTER 73
ROOFER 73
SHEET METAL WORKER 74
SHEET METAL WORKER - SPECIALTY 75
SHIPYARD WORKER 76
SIGN ERECTOR 78
STEAMFITTER 78
STEAMFITTER - REFRIGERATION AND AIR CONDITIONER 79
STONE MASON - SETTER 80
TAPER 81
TELECOMMUNICATION WORKER 82
TILE FINISHER 83
TILE LAYER - SETTER 84
TIMBERPERSON 85
TUNNEL WORKER 85
UTILITY LOCATOR 87
WELDER 89

ASBESTOS HANDLER
SEE HAZARDOUS MATERIAL HANDLER

BLASTER

Blaster

Effective Period: 7/1/2021 - 6/30/2022
Wage Rate per Hour: $56.71
Supplemental Benefit Rate per Hour: $48.63

Blaster - Hydraulic Trac Drill

Effective Period: 7/1/2021 - 6/30/2022
Wage Rate per Hour: $50.85
Supplemental Benefit Rate per Hour: $48.63

Blaster - Wagon: Air Trac: Quarry Bar: Drillrunners

Effective Period: 7/1/2021 - 6/30/2022
Wage Rate per Hour: $50.02
Supplemental Benefit Rate per Hour: $48.63

Blaster - Journeyperson

(Laborer, Chipper/Jackhammer including Walk Behind Self Propelled Hydraulic Asphalt and Concrete Breakers and Hydro (Water) Demolition, Powder Carrier, Hydraulic Chuck Tender, Chuck Tender and Nipper)

Effective Period: 7/1/2021 - 6/30/2022
Wage Rate per Hour: $43.50
Supplemental Benefit Rate per Hour: $48.63

Blaster - Magazine Keepers: (Watch Person)

Effective Period: 7/1/2021 - 6/30/2022
Wage Rate per Hour: $21.75
Supplemental Benefit Rate per Hour: $48.63

Overtime
Time and one half the regular rate after an 8 hour day.
Time and one half the regular rate for Saturday.
Double time the regular rate for Sunday.

Overtime Holidays

Double time the regular rate for work on the following holiday(s).
New Year's Day
Memorial Day
Independence Day
Labor Day
Columbus Day
Thanksgiving Day
Christmas Day

Paid Holidays

Labor Day
Thanksgiving Day

Shift Rates

When two shifts are employed, single time rate shall be paid for each shift. When three shifts are found necessary, each shift shall work seven and one half hours (7 ½), but shall be paid for eight (8) hours of labor, and be permitted one half hour for lunch.

(Local #731)

BOILERMAKER

Boilermaker

Effective Period: 7/1/2021 - 6/30/2022
Wage Rate per Hour: $63.38
Supplemental Benefit Rate per Hour: $46.67
Supplemental Note: For time and one half overtime - $69.56 For double overtime - $92.44

Overtime Description

For Repair and Maintenance work:
Time and one half the regular rate after an 8 hour day.
Time and one half the regular rate for Saturday.
Double time the regular rate for Sunday.
For New Construction work:
Double time the regular rate after an 8 hour day.
Double time the regular time rate for Saturday.
Double time the regular rate for Sunday.

Overtime Holidays

Double time the regular rate for work on the following holiday(s).
New Year's Day
President's Day
Memorial Day
Independence Day

Columbus Day
Election Day
Veteran's Day
Thanksgiving Day
Christmas Day

Quadruple time the regular rate for work on the following holiday(s).
Labor Day

Paid Holidays
Good Friday
Day after Thanksgiving
Day before Christmas
Day before New Year's Day

Shift Rates
On jobs requiring two (2) or three (3) shifts, the first shift shall work eight (8) hours at the regular straight-time hourly rate. The second shift shall work eight (8) hours and receive eight hours at the regular straight time hourly rate plus two dollars ($2.00) per hour. The third shift shall work eight (8) hours and receive eight hours at the regular straight time hourly rate plus two dollars and twenty-five cents ($2.25) per hour.

(Local #5)

BRICKLAYER

Bricklayer

Effective Period: 7/1/2021 - 6/30/2022
Wage Rate per Hour: $57.64
Supplemental Benefit Rate per Hour: $35.95

Overtime Description
Time and one half the regular rate after a 7 hour day. If working on a job that is predominately Pointer, Cleaner, Caulker work, then Time and one half the regular rate after an 8 hour day.

Overtime
Time and one half the regular rate for Saturday.
Double time the regular rate for Sunday.
Saturday may be used as a make-up day at straight time when a day is lost during that week to inclement weather.

Overtime Holidays
Double time the regular rate for work on the following holiday(s).
New Year's Day
President's Day
Memorial Day
Independence Day

Labor Day
Thanksgiving Day
Christmas Day

Paid Holidays
None

Shift Rates
The second shift wage rate shall be a 15% wage premium with no premium for supplemental benefits. There must be a first shift in order to work a second shift. When it is not possible to conduct alteration or repair work during regular working hours in a building occupied by tenants, eight hours will be paid at straight time rate for seven hours of work.

(Bricklayer District Council)

CARPENTER - BUILDING COMMERCIAL

Building Commercial

Effective Period: 7/1/2021 - 6/30/2022
Wage Rate per Hour: $54.75
Supplemental Benefit Rate per Hour: $47.13

Overtime
Time and one half the regular rate after an 8 hour day.
Time and one half the regular rate for Saturday.
Double time the regular rate for Sunday.
Saturday may be used as a make-up day at straight time when a day is lost during that week to inclement weather.

Overtime Holidays
Double time the regular rate for work on the following holiday(s).
New Year's Day
President's Day
Memorial Day
Independence Day
Labor Day
Columbus Day
Presidential Election Day
Thanksgiving Day
Day after Thanksgiving
Christmas Day

Paid Holidays
None

Shift Rates

The second shift will receive one hour at the double time rate of pay for the last hour of the shift; eight hours pay for seven hours of work, nine hours pay for eight hours of work. There must be a first shift in order to work a second shift. When it is not possible to conduct alteration or repair work during regular working hours in a building occupied by tenants, the rule for the second shift will apply.

(Carpenters District Council)

CARPENTER - HEAVY CONSTRUCTION WORK
(Construction of Engineered Structures and Building Foundations including all form work)

Heavy Construction Work

Effective Period: 7/1/2021 - 6/30/2022
Wage Rate per Hour: $56.93
Supplemental Benefit Rate per Hour: $53.49

Overtime

Time and one half the regular rate after an 8 hour day.
Time and one half the regular rate for Saturday.
Double time the regular rate for Sunday.
Saturday may be used as a make-up day at straight time when a day is lost during that week to inclement weather.

Overtime Holidays

Double time the regular rate for work on the following holiday(s).
New Year's Day
President's Day
Memorial Day
Independence Day
Labor Day
Columbus Day
Presidential Election Day
Thanksgiving Day
Christmas Day

Paid Holidays

None

Shift Rates

Off shift work commencing between 5:00 P.M. and 11:00 P.M. shall work eight and one half hours allowing for one half hour for lunch. The wage rate shall be 113% of the straight time hourly wage rate. When two (2) or more shifts of Carpenters are employed, single time will be paid for each shift.

(Carpenters District Council)

CARPENTER - HIGH RISE CONCRETE FORMS
(Excludes Engineered Structures and Building Foundations)

Carpenter High Rise A

Effective Period: 7/1/2021 - 6/30/2022
Wage Rate per Hour: $50.78
Supplemental Benefit Rate per Hour: $44.44

Carpenter High Rise B

Carpenter High Rise B worker is excluded from high risk operations such as erection decking, perimeter debris netting, leading edge work, self-climbing form systems, and the installation of cocoon systems unless directly supervised by a Carpenter High Rise A worker.

Effective Period: 7/1/2021 - 6/30/2022
Wage Rate per Hour: $40.19
Supplemental Benefit Rate per Hour: $17.75

Overtime
Time and one half the regular rate after an 8 hour day.
Time and one half the regular rate for Saturday.
Double time the regular rate for Sunday.
Saturday may be used as a make-up day at straight time when a day is lost during that week to inclement weather.

Overtime Holidays
Time and one half the regular rate for work on the following holiday(s).
New Year's Day
President's Day
Good Friday
Memorial Day
Independence Day
Labor Day
Columbus Day
Presidential Election Day
Thanksgiving Day
Christmas Day

Paid Holidays
None

Shift Rates

The second shift wage rate shall be 113% of the straight time hourly wage rate. However, any shift beginning after 5:00 P.M. shall be paid at time and one half the regular hourly rate. There must be a first shift in order to work a second shift. When it is not possible to conduct alteration or repair work during regular working hours in a building occupied by tenants, the rule for the second shift will apply.

(Carpenters District Council)

CARPENTER - SIDEWALK SHED, SCAFFOLD AND HOIST

Carpenter - Hod Hoist

(Assisted by Mason Tender)

Effective Period: 7/1/2021 - 6/30/2022
Wage Rate per Hour: $52.00
Supplemental Benefit Rate per Hour: $47.40

Overtime
Time and one half the regular rate after an 8 hour day.
Time and one half the regular rate for Saturday.
Double time the regular rate for Sunday.
Saturday may be used as a make-up day at straight time when a day is lost during that week to inclement weather.

Overtime Holidays
Double time the regular rate for work on the following holiday(s).
New Year's Day
President's Day
Memorial Day
Independence Day
Labor Day
Columbus Day
Presidential Election Day
Thanksgiving Day
Day after Thanksgiving
Christmas Day

Paid Holidays
None

Shift Rates
The second shift will receive 112% of the straight time hourly rate. Benefit fund contributions shall be paid at the straight time rate. There must be a first shift in order to work a second shift. When it is not possible to conduct alteration or repair work during regular working hours in a building occupied by tenants, the rule for the second shift will apply.

(Carpenters District Council)

CARPENTER - WOOD WATER STORAGE TANK

Tank Mechanic

Effective Period: 7/1/2021 - 6/30/2022
Wage Rate per Hour: $35.69
Supplemental Benefit Rate per Hour: $22.24

Tank Helper

Effective Period: 7/1/2021 - 6/30/2022
Wage Rate per Hour: $28.23
Supplemental Benefit Rate per Hour: $22.24

Overtime

Time and one half the regular rate after an 8 hour day.
Time and one half the regular rate for Saturday.
Double time the regular rate for Sunday.
Time and one half the regular rate for work on a holiday plus the day's pay.

Paid Holidays

New Year's Day
President's Day
Good Friday
Memorial Day
Independence Day
Labor Day
Columbus Day
Thanksgiving Day
Day after Thanksgiving
1/2 day on Christmas Eve if work is performed in the A.M.
Christmas Day
1/2 day on New Year's Eve if work is performed in the A.M.

Vacation

Employed for one (1) year.....one (1) week vacation (40 hours)
Employed for three (3) years.....two (2) weeks vacation (80 hours)
Employed for more than twenty (20) years.....three (3) weeks vacation (120 hours)

SICK LEAVE:
Two (2) sick days after being employed for twenty (20) years.

(Carpenters District Council)

CEMENT & CONCRETE WORKER

Cement & Concrete Worker

Effective Period: 7/1/2021 - 6/30/2022
Wage Rate per Hour: $45.28
Supplemental Benefit Rate per Hour: $30.20
Supplemental Note: $34.20 on Saturdays; $38.20 on Sundays & Holidays

Cement & Concrete Worker - (Hired after 2/6/2016)

Effective Period: 7/1/2021 - 6/30/2022
Wage Rate per Hour: $34.80
Supplemental Benefit Rate per Hour: $22.20
Supplemental Note: $24.20 on Saturdays; $26.20 on Sundays & Holidays

Overtime Description
Time and one half the regular rate after 7 hour day (time and one half the regular rate after an 8 hour day when working with Dockbuilders on pile cap forms and for work below street level to the top of the foundation wall, not to exceed 2 feet or 3 feet above the sidewalk-brick shelf, when working on the foundation and structure.)

Overtime
Time and one half the regular rate for Saturday.
Double time the regular rate for Sunday.

Overtime Holidays
Double time the regular rate for work on the following holiday(s).
New Year's Day
President's Day
Good Friday
Memorial Day
Independence Day
Labor Day
Columbus Day
Presidential Election Day
Thanksgiving Day
Christmas Day

Paid Holidays
1/2 day before Christmas Day
1/2 day before New Year's Day

Shift Rates
On shift work extending over a twenty-four hour period, all shifts are paid at straight time.

(Cement & Concrete Workers District Council 16)

CEMENT MASON

Cement Mason

Effective Period: 7/1/2021 - 6/30/2022
Wage Rate per Hour: $45.77
Supplemental Benefit Rate per Hour: $41.01
Supplemental Note: Supplemental benefit time and one half rate: $71.97; Double time rate: double the base supplemental benefit rate.

Overtime Description
Time and one-half the regular rate after an 8 hour day, double time the regular rate after 10 hours. Time and one-half the regular rate on Saturday, double time the regular rate after 10 hours. Double time the regular rate on Sunday. Four Days a week at Ten (10) hours straight time is allowed.

Overtime Holidays
Double time the regular rate for work on the following holiday(s).
New Year's Day
President's Day
Good Friday
Memorial Day
Independence Day
Labor Day
Columbus Day
Presidential Election Day
Thanksgiving Day
Christmas Day

Paid Holidays
Any worker who reports to work on Christmas Eve or New Year's Eve pursuant to his employer's instruction shall be entitled to three (3) hours afternoon pay without working.

Shift Rates
For off shift work, (at times other than the regular 7:00 A.M. to 3:30 P.M. work day) a cement mason shall be paid at the regular hourly rate plus a 25% per hour differential.

(Local #780) (BCA)

CORE DRILLER

Core Driller

Effective Period: 7/1/2021 - 10/17/2021

Wage Rate per Hour: $41.74
Supplemental Benefit Rate per Hour: $29.40

Effective Period: 10/18/2021 - 6/30/2022
Wage Rate per Hour: $42.27
Supplemental Benefit Rate per Hour: $30.60

Core Driller Helper

Effective Period: 7/1/2021 - 10/17/2021
Wage Rate per Hour: $32.92
Supplemental Benefit Rate per Hour: $29.40

Effective Period: 10/18/2021 - 6/30/2022
Wage Rate per Hour: $33.47
Supplemental Benefit Rate per Hour: $30.60

Core Driller Helper(Third year in the industry)

Effective Period: 7/1/2021 - 10/17/2021
Wage Rate per Hour: $29.63
Supplemental Benefit Rate per Hour: $29.40

Effective Period: 10/18/2021 - 6/30/2022
Wage Rate per Hour: $30.12
Supplemental Benefit Rate per Hour: $30.60

Core Driller Helper (Second year in the industry)

Effective Period: 7/1/2021 - 10/17/2021
Wage Rate per Hour: $26.34
Supplemental Benefit Rate per Hour: $29.40

Effective Period: 10/18/2021 - 6/30/2022
Wage Rate per Hour: $26.78
Supplemental Benefit Rate per Hour: $30.60

Core Driller Helper (First year in the industry)

Effective Period: 7/1/2021 - 10/17/2021
Wage Rate per Hour: $23.04
Supplemental Benefit Rate per Hour: $29.40

Effective Period: 10/18/2021 - 6/30/2022
Wage Rate per Hour: $23.43
Supplemental Benefit Rate per Hour: $30.60

Overtime Description

Time and one half the regular rate for work on a holiday plus Holiday pay when worked.

Overtime

Time and one half the regular rate after an 8 hour day.
Time and one half the regular rate for Saturday.
Double time the regular rate for Sunday.
Time and one half the regular rate for work on the following holiday(s).

Paid Holidays

New Year's Day
Memorial Day
Independence Day
Labor Day
Thanksgiving Day
Christmas Day

Shift Rates

When two (2) or more shifts are employed, single time shall be paid for each shift, but those employees employed on a shift other than from 8:00 A.M. to 5:00 P.M. shall, in addition, receive two dollars ($2.00) per hour differential for each hour worked. When three (3) shifts are needed, each shift shall work seven and one-half (7 ½) hours paid for eight (8) hours of labor and be permitted one-half (½) hour for mealtime.

(Carpenters District Council)

DERRICKPERSON AND RIGGER

Derrick Person & Rigger

Effective Period: 7/1/2021 - 6/30/2022
Wage Rate per Hour: $53.99
Supplemental Benefit Rate per Hour: $55.10
Supplemental Note: The above supplemental rate applies for work performed in Manhattan, Bronx, Brooklyn and Queens. $56.52 - For work performed in Staten Island.

Derrick Person & Rigger - Site Work

Assists the Stone Mason-Setter in the setting of stone and paving stone.

Effective Period: 7/1/2021 - 6/30/2022
Wage Rate per Hour: $44.86
Supplemental Benefit Rate per Hour: $43.37

Overtime Description

The first two hours of overtime on weekdays and the first seven hours of work on Saturdays are paid at time and one half for wages and supplemental benefits. All additional overtimes is paid at double time for wages and supplemental benefits. Deduct $1.42 from the Staten Island hourly benefits rate before computing overtime.

Overtime
Double time the regular rate for Sunday.

Overtime Holidays
Double time the regular rate for work on the following holiday(s).
New Year's Day
Washington's Birthday
Good Friday
Memorial Day
Independence Day
Labor Day
Thanksgiving Day
Christmas Day

Paid Holidays
1/2 day on Christmas Eve if work is performed in the A.M.

(Local #197)

DIVER

Diver (Marine)

Effective Period: 7/1/2021 - 6/30/2022
Wage Rate per Hour: $71.80
Supplemental Benefit Rate per Hour: $53.49

Diver Tender (Marine)

Effective Period: 7/1/2021 - 6/30/2022
Wage Rate per Hour: $51.34
Supplemental Benefit Rate per Hour: $53.49

Overtime
Time and one half the regular rate after an 8 hour day.
Time and one half the regular rate for Saturday.
Double time the regular rate for Sunday.
Saturday may be used as a make-up day at straight time when a day is lost during that week to inclement weather.

Overtime Holidays
Double time the regular rate for work on the following holiday(s).
New Year's Day
President's Day
Memorial Day
Independence Day

Labor Day
Columbus Day
Presidential Election Day
Thanksgiving Day
Christmas Day

Paid Holidays
None

Shift Rates
When three shifts are utilized each shift shall work seven and one half-hours (7 1/2 hours) and paid for 8 hours, allowing for one half hour for lunch.

(Carpenters District Council)

DOCKBUILDER - PILE DRIVER

Dockbuilder - Pile Driver

Effective Period: 7/1/2021 - 6/30/2022
Wage Rate per Hour: $56.93
Supplemental Benefit Rate per Hour: $53.49

Overtime
Time and one half the regular rate after an 8 hour day.
Time and one half the regular rate for Saturday.
Double time the regular rate for Sunday.
Saturday may be used as a make-up day at straight time when a day is lost during that week to inclement weather.

Overtime Holidays
Double time the regular rate for work on the following holiday(s).
New Year's Day
President's Day
Memorial Day
Independence Day
Labor Day
Columbus Day
Presidential Election Day
Thanksgiving Day
Christmas Day

Paid Holidays
None

Shift Rates

Off shift work commencing between 5:00 P.M. and 11:00 P.M. shall work eight and one half hours allowing for one half hour for lunch. The wage rate shall be 113% of the straight time hourly wage rate.

(Carpenters District Council)

DRIVER: TRUCK (TEAMSTER)

Driver - Dump Truck

Effective Period: 7/1/2021 - 6/30/2022
Wage Rate per Hour: $43.83
Supplemental Benefit Rate per Hour: $51.55
Supplemental Note: Over 40 hours worked: at time and one half rate - $22.50; at double time rate - $30.00

Driver - Tractor Trailer

Effective Period: 7/1/2021 - 6/30/2022
Wage Rate per Hour: $46.12
Supplemental Benefit Rate per Hour: $51.50
Supplemental Note: Over 40 hours worked: at time and one half rate - $22.50; at double time rate - $30.00

Driver - Euclid & Turnapull Operator

Effective Period: 7/1/2021 - 6/30/2022
Wage Rate per Hour: $46.68
Supplemental Benefit Rate per Hour: $51.50
Supplemental Note: Over 40 hours worked: at time and one half rate - $22.50; at double time rate - $30.00

Overtime Description

For Paid Holidays: Holiday pay for all holidays shall be prorated based two hours per day for each day worked in the holiday week, not to exceed 8 hours of holiday pay. For Thanksgiving week, the prorated share shall be 5 1/3 hours of holiday pay for each day worked in Thanksgiving week.

Overtime

Time and one half the regular rate after an 8 hour day.
Time and one half the regular rate for Saturday.
Double time the regular rate for Sunday.

Overtime Holidays

Double time the regular rate for work on the following holiday(s).
New Year's Day
President's Day
Memorial Day
Independence Day
Labor Day
Columbus Day

Veteran's Day
Thanksgiving Day
Day after Thanksgiving
Christmas Day

Paid Holidays

New Year's Day
President's Day
Memorial Day
Independence Day
Labor Day
Columbus Day
Veteran's Day
Thanksgiving Day
Day after Thanksgiving
Christmas Day

Shift Rates

Off shift work commencing between 6:00 P.M. and 4:30 A.M. shall work eight and one half (8 1/2) hours allowing for one half hour for lunch and receive 9 hours pay for 8 hours of work.

Driver Redi-Mix (Sand & Gravel)

Effective Period: 7/1/2021 - 6/30/2022
Wage Rate per Hour: $40.89
Supplemental Benefit Rate per Hour: $47.01
Supplemental Note: Over 40 hours worked: time and one half rate $18.01; double time rate $24.01

Overtime Description

For Paid Holidays: Employees who do not work on a contractual holiday shall be compensated two (2) hours extra pay in straight time wages and benefits for every day on which the Employee does not pass up a day's work during the calendar week (Sunday through Saturday) of the holiday, up to a maximum of ten (10) hours in wages and eight (8) hours in benefit contributions for the holiday

Overtime

Time and one half the regular rate after an 8 hour day.
Time and one half the regular rate for Saturday.
Double time the regular rate for Sunday.

Overtime Holidays

Double time the regular rate for work on the following holiday(s).
President's Day
Columbus Day
Veteran's Day

Triple time the regular rate for work on the following holiday(s).
New Year's Day
Memorial Day
Independence Day

Labor Day
Thanksgiving Day
Christmas Day

Paid Holidays

New Year's Day
President's Day
Memorial Day
Independence Day
Labor Day
Columbus Day
Election Day
Thanksgiving Day
Christmas Day

(Local #282)

ELECTRICIAN

(Including installation of low voltage cabling carrying data, video and/or voice on building construction/alteration/renovation projects.)

Electrician "A" (Regular Day / Day Shift)

Effective Period: 7/1/2021 - 6/30/2022
Wage Rate per Hour: $58.00
Supplemental Benefit Rate per Hour: $54.86
*** Supplemental Note: See Supplemental Benefit Rate per Hour Note below**

Electrician "A" (Regular Day Overtime after 7 hrs / Day Shift Overtime after 8 hrs)

Effective Period: 7/1/2021 - 6/30/2022
Wage Rate per Hour: $87.00
Supplemental Benefit Rate per Hour: $56.73
*** Supplemental Note: See Supplemental Benefit Rate per Hour Note below**

Electrician "A" (Swing Shift)

Effective Period: 7/1/2021 - 6/30/2022
Wage Rate per Hour: $68.05
Supplemental Benefit Rate per Hour: $62.39
*** Supplemental Note: See Supplemental Benefit Rate per Hour Note below**

Electrician "A" (Swing Shift Overtime after 7.5 hours)

Effective Period: 7/1/2021 - 6/30/2022

Wage Rate per Hour: $102.08
Supplemental Benefit Rate per Hour: $64.58
*** Supplemental Note: See Supplemental Benefit Rate per Hour Note below**

Electrician "A" (Graveyard Shift)

Effective Period: 7/1/2021 - 6/30/2022
Wage Rate per Hour: $76.23
Supplemental Benefit Rate per Hour: $68.74
*** Supplemental Note: See Supplemental Benefit Rate per Hour Note below**

Electrician "A" (Graveyard Shift Overtime after 7 hours)

Effective Period: 7/1/2021 - 6/30/2022
Wage Rate per Hour: $114.35
Supplemental Benefit Rate per Hour: $71.19
*** Supplemental Note: See Supplemental Benefit Rate per Hour Note below**

* Supplemental Benefit Rate per Hour Note

In addition to the Supplemental Benefit Rates per Hour listed above, the employer must provide an additional 6.2% of taxable gross pay earned on covered work only. This additional Supplemental Benefit Rate will terminate when the employee has contributed the maximum annual Social Security tax required by law, on all work performed.

Overtime

Time and one half the regular rate after a 7 hour day.
Time and one half the regular rate for Saturday.
Time and one half the regular rate for Sunday.

Overtime Holidays

Time and one half the regular rate for work on a holiday.
New Year's Day
Martin Luther King Jr. Day
President's Day
Memorial Day
Independence Day
Labor Day
Columbus Day
Veteran's Day
Thanksgiving Day
Day after Thanksgiving
Christmas Day

Paid Holidays

None

Shift Rates

For multiple shifts of temporary light and/or power, the temporary light and/or power employee shall be paid for 8 hours at the straight time rate. For three or less workers performing 8 hours temporary light and/or power the supplemental benefit rate is $21.86 - See * Supplemental Benefit Rate per Hour Note above.

Electrician "M" (First 8 hours)

"M" rated work shall be defined as jobbing: electrical work of limited duration and scope, also consisting of repairs and/or replacement of electrical and tele-data equipment. Includes all work necessary to retrofit, service, maintain and repair all kinds of lighting fixtures and local lighting controls and washing and cleaning of foregoing fixtures.

Effective Period: 7/1/2021 - 6/30/2022
Wage Rate per Hour: $30.50
Supplemental Benefit Rate per Hour: $24.45
First and Second Year "M" Wage Rate Per Hour: $26.00
First and Second Year "M" Supplemental Rate: $22.06

Electrician "M" (Overtime After First 8 hours)

"M" rated work shall be defined as jobbing: electrical work of limited duration and scope, also consisting of repairs and/or replacement of electrical and tele-data equipment. Includes all work necessary to retrofit, service, maintain and repair all kinds of lighting fixtures and local lighting controls and washing and cleaning of foregoing fixtures.

Effective Period: 7/1/2021 - 6/30/2022
Wage Rate per Hour: $45.75
Supplemental Benefit Rate per Hour: $26.38
First and Second Year "M" Wage Rate Per Hour: $39.00
First and Second Year "M" Supplemental Rate: $23.70

Overtime

Time and one half the regular rate after an 8 hour day.
Time and one half the regular rate for Saturday.
Time and one half the regular rate for Sunday.

Overtime Holidays

Time and one half the regular rate for work on the following holiday(s).
New Year's Day
Martin Luther King Jr. Day
President's Day
Memorial Day
Independence Day
Labor Day
Columbus Day
Veteran's Day
Thanksgiving Day
Day after Thanksgiving
Christmas Day

Paid Holidays

None

(Local #3)

ELECTRICIAN - ALARM TECHNICIAN

(Scope of Work - Inspect, test, repair, and replace defective, malfunctioning, or broken devices, components and controls of Fire, Burglar and Security Systems)

Alarm Technician

Effective Period: 7/1/2021 - 6/30/2022
Wage Rate per Hour: $33.90
Supplemental Benefit Rate per Hour: $18.43
Supplemental Note: $16.80 only after 8 hours worked in a day

Overtime Description

Time and one half the regular rate for work on the following holidays: Columbus Day, Veterans Day, Day after Thanksgiving.
Double time the regular rate for work on the following holidays: New Year's day, Martin Luther King Jr. Day, President's Day, Memorial Day, Independence Day, Labor Day, Thanksgiving Day, Christmas Day.

Overtime

Time and one half the regular rate after an 8 hour day.
Time and one half the regular rate for Saturday.
Time and one half the regular rate for Sunday.

Paid Holidays

New Year's Day
Martin Luther King Jr. Day
President's Day
Memorial Day
Independence Day
Labor Day
Columbus Day
Veteran's Day
Thanksgiving Day
Day after Thanksgiving
Christmas Day

Shift Rates

Night Differential is based upon a ten percent (10%) differential between the hours of 4:00 P.M. and 12:30 A.M. and a fifteen percent (15%) differential for the hours 12:00 A.M. to 8:30 A.M.

Vacation

At least 1 year of employment.....ten (10) days
5 years or more of employment.....fifteen (15) days
10 years of employment.....twenty (20) days
Plus one Personal Day per year

Sick Days:
One day per Year. Up to 4 vacation days may be used as sick days.

(Local #3)

ELECTRICIAN-STREET LIGHTING WORKER

Electrician - Electro Pole Electrician

Effective Period: 7/1/2021 - 6/30/2022
Wage Rate per Hour: $58.00
Supplemental Benefit Rate per Hour: $56.83
*** Supplemental Note: See Supplemental Benefit Rate per Hour Note below**

Electrician - Electro Pole Foundation Installer

Effective Period: 7/1/2021 - 6/30/2022
Wage Rate per Hour: $43.16
Supplemental Benefit Rate per Hour: $42.15
*** Supplemental Note: See Supplemental Benefit Rate per Hour Note below**

Electrician - Electro Pole Maintainer

Effective Period: 7/1/2021 - 6/30/2022
Wage Rate per Hour: $37.11
Supplemental Benefit Rate per Hour: $38.04
*** Supplemental Note: See Supplemental Benefit Rate per Hour Note below**

* Supplemental Benefit Rate per Hour Note

In addition to the Supplemental Benefit Rates per Hour listed above, the employer must provide an additional 6.2% of taxable gross pay earned on covered work only. This additional Supplemental Benefit Rate will terminate when the employee has contributed the maximum annual Social Security tax required by law, on all work performed.

Overtime Description

Electrician - Electro Pole Electrician: Time and one half the regular rate after a 7 hour day and after 5 consecutive days worked per week.
Electrician - Electro Pole Foundation Installer: Time and one half the regular rate after 8 hours within a 24 hour period and Saturday and Sunday.
Electrician - Electro Pole Maintainer: Time and one half the regular rate after a 7 hour day and after 5 consecutive days worked per week. Saturdays and Sundays may be used as a make-up day at straight time when a day is lost during the week to inclement weather.

Overtime Holidays

Time and one half the regular rate for work on the following holiday(s).
New Year's Day
Martin Luther King Jr. Day

President's Day
Memorial Day
Independence Day
Labor Day
Columbus Day
Veteran's Day
Thanksgiving Day
Day after Thanksgiving
Christmas Day

Paid Holidays
None

(Local #3)

ELEVATOR CONSTRUCTOR

Elevator Constructor

Effective Period: 7/1/2021 - 3/16/2022
Wage Rate per Hour: $72.29
Supplemental Benefit Rate per Hour: $38.29

Effective Period: 3/17/2022 - 6/30/2022
Wage Rate per Hour: $75.14
Supplemental Benefit Rate per Hour: $39.10

Overtime Description
For New Construction: work performed after an 8 hour day, Saturday, Sunday or between 4:30pm and 7:00am shall be paid at double time rate.

Existing buildings: work performed after an 8 hour day, Saturday, Sunday or between 5:30pm and 7:00 am shall be paid time and one half.

Overtime
Double time the regular rate for work on the following holiday(s).

Paid Holidays
New Year's Day
President's Day
Good Friday
Memorial Day
Independence Day
Labor Day
Columbus Day
Veteran's Day
Thanksgiving Day

Day after Thanksgiving
Christmas Day

Vacation

Employer contributes 8% of regular basic hourly rate as vacation pay for employees with more than 15 years of service, and 6% for employees with 5 to 15 years of service, and 4% for employees with less than 5 years of service.

(Local #1)

ELEVATOR REPAIR & MAINTENANCE

Elevator Service/Modernization Mechanic

Effective Period: 7/1/2021 - 3/16/2022
Wage Rate per Hour: $56.77
Supplemental Benefit Rate per Hour: $38.19

Effective Period: 3/17/2022 - 6/30/2022
Wage Rate per Hour: $59.09
Supplemental Benefit Rate per Hour: $39.00

Overtime Description

For Scheduled Service Work: Double time - work scheduled in advance by two or more workers performed on Sundays, Holidays, and between midnight and 7:00am.

Overtime

Time and one half the regular rate after an 8 hour day.
Time and one half the regular rate for Saturday.
Time and one half the regular rate for Sunday.
Time and one half the regular rate for work on a holiday plus the day's pay.

Paid Holidays

New Year's Day
President's Day
Good Friday
Memorial Day
Independence Day
Labor Day
Columbus Day
Veteran's Day
Thanksgiving Day
Day after Thanksgiving
Christmas Day

Shift Rates

Afternoon shift - regularly hourly rate plus a (15%) fifteen percent differential. Graveyard shift - time and one half the regular rate.

Vacation

Employer contributes 8% of regular basic hourly rate as vacation pay for employees with more than 15 years of service, and 6% for employees with 5 to 15 years of service, and 4% for employees with less than 5 years of service.

(Local #1)

ENGINEER

Engineer - Heavy Construction Operating Engineer I

Cherrypickers 20 tons and over and Loaders (rubber tired and/or tractor type with a manufacturer's minimum rated capacity of six cubic yards and over).

Effective Period: 7/1/2021 - 6/30/2022
Wage Rate per Hour: $74.65
Supplemental Benefit Rate per Hour: $42.06
Supplemental Note: $76.72 on overtime
Shift Wage Rate: $119.44

Engineer - Heavy Construction Operating Engineer II

Backhoes, Basin Machines, Groover, Mechanical Sweepers, Bobcat, Boom Truck, Barrier Transport (Barrier Mover) & machines of similar nature. Operation of Churn Drills and machines of a similar nature, Stetco Silent Hoist and machines of similar nature, Vac-Alls, Meyers Machines, John Beam and machines of a similar nature, Ross Carriers and Travel Lifts and machines of a similar nature, Bulldozers, Scrapers and Turn-a-Pulls: Tugger Hoists (Used exclusively for handling excavated material); Tractors with attachments, Hyster and Roustabout Cranes, Cherrypickers. Austin Western, Grove and machines of a similar nature, Scoopmobiles, Monorails, Conveyors, Trenchers: Loaders-Rubber Tired and Tractor: Barber Greene and Eimco Loaders and Eimco Backhoes; Mighty Midget and similar breakers and Tampers, Curb and Gutter Pavers and Motor Patrol, Motor Graders and all machines of a similar nature. Locomotives 10 Tons or under. Mini-Max, Break-Tech and machines of a similar nature; Milling machines, robotic and demolition machines and machines of a similar nature, shot blaster, skid steer machines and machines of a similar nature including bobcat, pile rig rubber-tired excavator (37,000 lbs. and under), 2 man auger.

Effective Period: 7/1/2021 - 6/30/2022
Wage Rate per Hour: $72.40
Supplemental Benefit Rate per Hour: $42.06
Supplemental Note: $76.72 on overtime
Shift Wage Rate: $115.84

Engineer - Heavy Construction Operating Engineer III

Minor Equipment such as Tractors, Post Hole Diggers, Ditch Witch (Walk Behind), Road Finishing Machines, Rollers five tons and under, Tugger Hoists, Dual Purpose Trucks, Fork Lifts, and Dempsey Dumpers, Fireperson.

Effective Period: 7/1/2021 - 6/30/2022
Wage Rate per Hour: $68.62
Supplemental Benefit Rate per Hour: $42.06
Supplemental Note: $76.72 on overtime
Shift Wage Rate: $109.79

Engineer - Heavy Construction Maintenance Engineer I

Installing, Repairing, Maintaining, Dismantling and Manning of all equipment including Steel Cutting, Bending and Heat Sealing Machines, Mechanical Heaters, Grout Pumps, Bentonite Pumps & Plants, Screening Machines, Fusion Coupling Machines, Tunnel Boring Machines Moles and Machines of a similar nature, Power Packs, Mechanical Hydraulic Jacks; all drill rigs including but not limited to Churn, Rotary Caisson, Raised Bore & Drills of a similar nature; Personnel, Inspection & Safety Boats or any boats used to perform functions of same, Mine Hoists, Whirlies, all Climbing Cranes, all Tower Cranes, including but not limited to Truck Mounted and Crawler Type and machines of similar nature; Maintaining Hydraulic Drills and machines of a similar nature; Well Point System-Installation and dismantling; Burning, Welding, all Pumps regardless of size and/or motor power, except River Cofferdam Pumps and Wells Point Pumps; Motorized Buggies (three or more); equipment used in the cleaning and televising of sewers, but not limited to jet-rodder/vacuum truck, vacall/vactor, closed circuit television inspection equipment; high powered water pumps, jet pumps; screed machines and concrete finishing machines of a similar nature; vermeers.

Effective Period: 7/1/2021 - 6/30/2022
Wage Rate per Hour: $72.05
Supplemental Benefit Rate per Hour: $42.06
Supplemental Note: $76.72 on overtime
Shift Wage Rate: $115.28

Engineer - Heavy Construction Maintenance Engineer II

On Base Mounted Tower Cranes

Effective Period: 7/1/2021 - 6/30/2022
Wage Rate per Hour: $95.02
Supplemental Benefit Rate per Hour: $42.06
Supplemental Note: $76.72 on overtime
Shift Wage Rate: $152.03

Engineer - Heavy Construction Maintenance Engineer III

On Generators, Light Towers

Effective Period: 7/1/2021 - 6/30/2022
Wage Rate per Hour: $47.10
Supplemental Benefit Rate per Hour: $42.06
Supplemental Note: $76.72 on overtime
Shift Wage Rate: $75.36

Engineer - Heavy Construction Maintenance Engineer IV

On Pumps and Mixers including mud sucking

Effective Period: 7/1/2021 - 6/30/2022
Wage Rate per Hour: $48.35
Supplemental Benefit Rate per Hour: $42.06
Supplemental Note: $76.72 on overtime
Shift Wage Rate: $77.36

Engineer - Heavy Construction Service Engineer

Gradalls: Concrete Pumps: Power Houses: Driving Truck Cranes: Driving and Operating Fuel and Grease Trucks.

Effective Period: 7/1/2021 - 6/30/2022
Wage Rate per Hour: $64.82
Supplemental Benefit Rate per Hour: $42.06
Supplemental Note: $76.72 on overtime
Shift Wage Rate: $103.71

Engineer - Heavy Construction Service Mechanic

Shovels: Cranes: Draglines: Backhoes: Keystones: Pavers: Trenching Machines: Gunite Machines: Compressors (three (3) or more in Battery): Crawler Cranes- having a straight lattice boom with no attachment or luffing boom, no jib and no auxiliary attachment.

Effective Period: 7/1/2021 - 6/30/2022
Wage Rate per Hour: $44.45
Supplemental Benefit Rate per Hour: $42.06
Supplemental Note: $76.72 on overtime
Shift Wage Rate: $71.12

Engineer - Steel Erection Maintenance Engineers

Derrick, Travelers, Tower, Crawler Tower and Climbing Cranes

Effective Period: 7/1/2021 - 6/30/2022
Wage Rate per Hour: $68.93
Supplemental Benefit Rate per Hour: $42.06
Supplemental Note: $76.72 on overtime
Shift Wage Rate: $110.29

Engineer - Steel Erection Oiler I

On a Truck Crane

Effective Period: 7/1/2021 - 6/30/2022
Wage Rate per Hour: $64.43
Supplemental Benefit Rate per Hour: $42.06
Supplemental Note: $76.72 on overtime
Shift Wage Rate: $103.09

Engineer - Steel Erection Oiler II

On a Crawler Crane

Effective Period: 7/1/2021 - 6/30/2022
Wage Rate per Hour: $48.72
Supplemental Benefit Rate per Hour: $42.06
Supplemental Note: $76.72 on overtime
Shift Wage Rate: $77.95

Overtime Description

On jobs of more than one shift, if the next shift employee fails to report for work through any cause over which the employer has no control, the employee on duty who works the next shift continues to work at the single time rate.

Overtime

Double time the regular rate after an 8 hour day.
Double time the regular time rate for Saturday.
Double time the regular rate for Sunday.
Double time the regular rate for work on the following holiday(s).

Paid Holidays

New Year's Day
Lincoln's Birthday
President's Day
Memorial Day
Independence Day
Labor Day
Columbus Day
Veteran's Day
Thanksgiving Day
Day after Thanksgiving
Christmas Day
Employees must work at least one day in the payroll week in which the holiday occurs to receive the paid holiday

---

Engineer - Building Work Maintenance Engineers I

Installing, repairing, maintaining, dismantling (of all equipment including: Steel Cutting and Bending Machines, Mechanical Heaters, Mine Hoists, Climbing Cranes, Tower Cranes, Linden Peine, Lorain, Liebherr, Mannes, or machines of a similar nature, Well Point Systems, Deep Well Pumps, Concrete Mixers with loading Device, Concrete Plants, Motor Generators when used for temporary power and lights), skid steer machines of a similar nature including bobcat.

Effective Period: 7/1/2021 - 6/30/2022
Wage Rate per Hour: $64.11
Supplemental Benefit Rate per Hour: $41.15
Supplemental Note: $74.90 on overtime

Engineer - Building Work Maintenance Engineers II

On Pumps, Generators, Mixers and Heaters

Effective Period: 7/1/2021 - 6/30/2022
Wage Rate per Hour: $49.49
Supplemental Benefit Rate per Hour: $41.15
Supplemental Note: $74.90 on overtime

Engineer - Building Work Oilers I

All gasoline, electric, diesel or air operated Gradealls: Concrete Pumps, Overhead Cranes in Power Houses: Their duties shall be to assist the Engineer in oiling, greasing and repairing of all machines; Driving Truck Cranes: Driving and Operating Fuel and Grease Trucks, Cherrypickers (hydraulic cranes) over 70,000 GVW, and machines of a similar nature.

Effective Period: 7/1/2021 - 6/30/2022
Wage Rate per Hour: $60.89
Supplemental Benefit Rate per Hour: $41.15
Supplemental Note: $74.90 on overtime

Engineer - Building Work Oilers II

Oilers on Crawler Cranes, Backhoes, Trenching Machines, Gunite Machines, Compressors (three or more in Battery).

Effective Period: 7/1/2021 - 6/30/2022
Wage Rate per Hour: $44.88
Supplemental Benefit Rate per Hour: $41.15
Supplemental Note: $74.90 on overtime

Overtime Description

On jobs of more than one shift, if an Employee fails to report for work through any cause over which the Employer has no control, the Employee on duty will continue to work at the rate of single time.

Overtime

Double time the regular rate after an 8 hour day.
Double time the regular time rate for Saturday.
Double time the regular rate for Sunday.
Double time the regular rate for work on the following holiday(s).

Paid Holidays

New Year's Day
Lincoln's Birthday
President's Day
Memorial Day
Independence Day
Labor Day
Columbus Day
Veteran's Day
Thanksgiving Day
Christmas Day
Employees must work at least one day in the payroll week in which the holiday occurs to receive the paid holiday

Shift Rates

When two (2) or more shifts are employed, single time will be paid for each shift.

(Local #15)

ENGINEER - CITY SURVEYOR AND CONSULTANT

Party Chief

Effective Period: 7/1/2021 - 6/30/2022
Wage Rate per Hour: $41.98
Supplemental Benefit Rate per Hour: $24.40
Supplemental Note: Overtime Benefit Rate - $29.35 per hour (time & one half) $34.30 per hour (double time).

Instrument Person

Effective Period: 7/1/2021 - 6/30/2022
Wage Rate per Hour: $34.32
Supplemental Benefit Rate per Hour: $24.40
Supplemental Note: Overtime Benefit Rate - $29.35 per hour (time & one half) $34.30 per hour (double time).

Rodperson

Effective Period: 7/1/2021 - 6/30/2022
Wage Rate per Hour: $29.49
Supplemental Benefit Rate per Hour: $24.40
Supplemental Note: Overtime Benefit Rate - $29.35 per hour (time & one half) $34.30 per hour (double time).

Overtime Description

Time and one half the regular rate after an 8 hour day, Time and one half the regular rate for Saturday for the first eight hours worked, Double time the regular time rate for Saturday for work performed in excess of eight hours, Double time the regular rate for Sunday and Double time the regular rate for work on a holiday.

Paid Holidays

New Year's Day
Lincoln's Birthday
President's Day
Memorial Day
Independence Day
Labor Day
Columbus Day
Veteran's Day
Thanksgiving Day
Day after Thanksgiving
Christmas Day
Employees must work at least one day in the payroll week in which the holiday occurs to receive the paid holiday

(Operating Engineer Local #15-D)

ENGINEER - FIELD (BUILDING CONSTRUCTION)
(Construction of Building Projects, Concrete Superstructures, etc.)

Field Engineer - BC Party Chief

Effective Period: 7/1/2021 - 6/30/2022
Wage Rate per Hour: $66.42
Supplemental Benefit Rate per Hour: $37.16
Supplemental Note: Overtime Benefit Rate - $52.27 per hour (time & one half) $67.37 per hour (double time).

Field Engineer - BC Instrument Person

Effective Period: 7/1/2021 - 6/30/2022
Wage Rate per Hour: $51.37
Supplemental Benefit Rate per Hour: $37.16
Supplemental Note: Overtime Benefit Rate - $52.27 per hour (time & one half) $67.37 per hour (double time).

Field Engineer - BC Rodperson

Effective Period: 7/1/2021 - 6/30/2022
Wage Rate per Hour: $32.84
Supplemental Benefit Rate per Hour: $37.16
Supplemental Note: Overtime Benefit Rate - $52.27 per hour (time & one half) $67.37 per hour (double time).

Overtime Description
Time and one half the regular rate after a 7 hour work and time and one half the regular rate for Saturday for the first seven hours worked, Double time the regular time rate for Saturday for work performed in excess of seven hours, Double time the regular rate for Sunday and Double time the regular rate for work on a holiday.

Paid Holidays
New Year's Day
President's Day
Good Friday
Memorial Day
Independence Day
Labor Day
Columbus Day
Veteran's Day
Thanksgiving Day
Christmas Day
Employees must work at least one day in the payroll week in which the holiday occurs to receive the paid holiday

(Operating Engineer Local #15-D)

ENGINEER - FIELD (HEAVY CONSTRUCTION)
(Construction of Roads, Tunnels, Bridges, Sewers, Building Foundations, Engineering Structures etc.)

Field Engineer - HC Party Chief

Effective Period: 7/1/2021 - 6/30/2022
Wage Rate per Hour: $77.31
Supplemental Benefit Rate per Hour: $39.64
Supplemental Note: Overtime benefit rate - $55.86 per hour (time & one half), $72.08 per hour (double time).

Field Engineer - HC Instrument Person

Effective Period: 7/1/2021 - 6/30/2022
Wage Rate per Hour: $56.50
Supplemental Benefit Rate per Hour: $39.64
Supplemental Note: Overtime benefit rate - $55.86 per hour (time & one half), $72.08 per hour (double time).

Field Engineer - HC Rodperson

Effective Period: 7/1/2021 - 6/30/2022
Wage Rate per Hour: $47.23
Supplemental Benefit Rate per Hour: $39.64
Supplemental Note: Overtime benefit rate - $55.86 per hour (time & one half), $72.08 per hour (double time).

Overtime Description
Time and one half the regular rate after an 8 hour day, Time and one half the regular rate for Saturday for the first eight hours worked, Double time the regular time rate for Saturday for work performed in excess of eight hours, Double time the regular rate for Sunday and Double time the regular rate for work on a holiday.

Paid Holidays
New Year's Day
Lincoln's Birthday
President's Day
Memorial Day
Independence Day
Labor Day
Columbus Day
Veteran's Day
Thanksgiving Day
Christmas Day
Employees must work at least one day in the payroll week in which the holiday occurs to receive the paid holiday

(Operating Engineer Local #15-D)

ENGINEER - FIELD (STEEL ERECTION)

Field Engineer - Steel Erection Party Chief

Effective Period: 7/1/2021 - 6/30/2022
Wage Rate per Hour: $71.98
Supplemental Benefit Rate per Hour: $39.14
Supplemental Note: Overtime benefit rate - $55.11 per hour (time & one half), $71.08 per hour (double time).

Field Engineer - Steel Erection Instrument Person

Effective Period: 7/1/2021 - 6/30/2022
Wage Rate per Hour: $55.85
Supplemental Benefit Rate per Hour: $39.14
Supplemental Note: Overtime benefit rate - $55.11 per hour (time & one half), $71.08 per hour (double time).

Field Engineer - Steel Erection Rodperson

Effective Period: 7/1/2021 - 6/30/2022
Wage Rate per Hour: $36.99
Supplemental Benefit Rate per Hour: $39.14
Supplemental Note: Overtime benefit rate - $55.11 per hour (time & one half), $71.08 per hour (double time).

Overtime Description

Time and one half the regular rate for Saturday for the first eight hours worked.
Double time the regular rate for Saturday for work performed in excess of eight hours.

Overtime

Time and one half the regular rate after an 8 hour day.
Double time the regular rate for Sunday.
Double time the regular rate for work on the following holiday(s).

Paid Holidays

New Year's Day
Lincoln's Birthday
President's Day
Memorial Day
Independence Day
Labor Day
Columbus Day
Veteran's Day
Thanksgiving Day
Christmas Day

Employees must work at least one day in the payroll week in which the holiday occurs to receive the paid holiday

(Operating Engineer Local #15-D)

ENGINEER - OPERATING

Operating Engineer - Road & Heavy Construction I

Back Filling Machines, Cranes, Mucking Machines and Dual Drum Paver.

Effective Period: 7/1/2021 - 6/30/2022
Wage Rate per Hour: $86.05
Supplemental Benefit Rate per Hour: $34.55
Supplemental Note: $63.15 overtime hours
Shift Wage Rate: $137.68

Operating Engineer - Road & Heavy Construction II

Backhoes, Power Shovels, Hydraulic Clam Shells, Steel Erection, Moles and machines of a similar nature.

Effective Period: 7/1/2021 - 6/30/2022
Wage Rate per Hour: $89.05
Supplemental Benefit Rate per Hour: $34.55
Supplemental Note: $63.15 overtime hours
Shift Wage Rate: $142.48

Operating Engineer - Road & Heavy Construction III

Mine Hoists (Cranes, etc. when used as Mine Hoists)

Effective Period: 7/1/2021 - 6/30/2022
Wage Rate per Hour: $91.89
Supplemental Benefit Rate per Hour: $34.55
Supplemental Note: $63.15 overtime hours
Shift Wage Rate: $147.02

Operating Engineer - Road & Heavy Construction IV

Gradealls, Keystones, Cranes on land or water (with digging buckets), Bridge Cranes, Vermeer Cutter and machines of a similar nature, Trenching Machines.

Effective Period: 7/1/2021 - 6/30/2022
Wage Rate per Hour: $89.70
Supplemental Benefit Rate per Hour: $34.55
Supplemental Note: $63.15 overtime hours

Shift Wage Rate: $143.52

Operating Engineer - Road & Heavy Construction V

Pile Drivers & Rigs (working alongside Dock Builder foreperson): Derrick Boats, Tunnel Shovels.

Effective Period: 7/1/2021 - 6/30/2022
Wage Rate per Hour: $87.94
Supplemental Benefit Rate per Hour: $34.55
Supplemental Note: $63.15 overtime hours
Shift Wage Rate: $140.70

Operating Engineer - Road & Heavy Construction VI

Mixers (Concrete with loading attachment), Concrete Pavers, Cableways, Land Derricks, Power Houses (Low Air Pressure Units).

Effective Period: 7/1/2021 - 6/30/2022
Wage Rate per Hour: $83.59
Supplemental Benefit Rate per Hour: $34.55
Supplemental Note: $63.15 overtime hours
Shift Wage Rate: $133.74

Operating Engineer - Road & Heavy Construction VII

Barrier Movers, Barrier Transport and Machines of a Similar Nature.

Effective Period: 7/1/2021 - 6/30/2022
Wage Rate per Hour: $67.71
Supplemental Benefit Rate per Hour: $34.55
Supplemental Note: $63.15 overtime hours
Shift Wage Rate: $108.34

Operating Engineer - Road & Heavy Construction VIII

Utility Compressors

Effective Period: 7/1/2021 - 6/30/2022
Wage Rate per Hour: $52.77
Supplemental Benefit Rate per Hour: $34.55
Supplemental Note: $63.15 overtime hours
Shift Wage Rate: $66.26

Operating Engineer - Road & Heavy Construction IX

Horizontal Boring Rig

Effective Period: 7/1/2021 - 6/30/2022
Wage Rate per Hour: $79.56

Supplemental Benefit Rate per Hour: $34.55
Supplemental Note: $63.15 overtime hours
Shift Wage Rate: $127.30

Operating Engineer - Road & Heavy Construction X

Elevators (manually operated as personnel hoist).

Effective Period: 7/1/2021 - 6/30/2022
Wage Rate per Hour: $73.21
Supplemental Benefit Rate per Hour: $34.55
Supplemental Note: $63.15 overtime hours
Shift Wage Rate: $117.14

Operating Engineer - Road & Heavy Construction XI

Compressors (Portable 3 or more in battery), Driving of Truck Mounted Compressors, Well-point Pumps, Tugger Machines Well Point Pumps, Churn Drill.

Effective Period: 7/1/2021 - 6/30/2022
Wage Rate per Hour: $57.06
Supplemental Benefit Rate per Hour: $34.55
Supplemental Note: $63.15 overtime hours
Shift Wage Rate: $91.30

Operating Engineer - Road & Heavy Construction XII

All Drills and Machines of a similar nature.

Effective Period: 7/1/2021 - 6/30/2022
Wage Rate per Hour: $84.48
Supplemental Benefit Rate per Hour: $34.55
Supplemental Note: $63.15 overtime hours
Shift Wage Rate: $135.17

Operating Engineer - Road & Heavy Construction XIII

Concrete Pumps, Concrete Plant, Stone Crushers, Double Drum Hoist, Power Houses (other than above).

Effective Period: 7/1/2021 - 6/30/2022
Wage Rate per Hour: $81.85
Supplemental Benefit Rate per Hour: $34.55
Supplemental Note: $63.15 overtime hours
Shift Wage Rate: $130.96

Operating Engineer - Road & Heavy Construction XIV

Concrete Mixer

Effective Period: 7/1/2021 - 6/30/2022

Wage Rate per Hour: $78.28
Supplemental Benefit Rate per Hour: $34.55
Supplemental Note: $63.15 overtime hours
Shift Wage Rate: $125.25

Operating Engineer - Road & Heavy Construction XV

Compressors (Portable Single or two in Battery, not over 100 feet apart), Pumps (River Cofferdam) and Welding Machines, Push Button Machines, All Engines Irrespective of Power (Power-Pac) used to drive auxiliary equipment, Air, Hydraulic, etc.

Effective Period: 7/1/2021 - 6/30/2022
Wage Rate per Hour: $53.11
Supplemental Benefit Rate per Hour: $34.55
Supplemental Note: $63.15 overtime hours
Shift Wage Rate: $84.98

Operating Engineer - Road & Heavy Construction XVI

Concrete Breaking Machines, Hoists (Single Drum), Load Masters, Locomotives (over ten tons) and Dinkies over ten tons, Hydraulic Crane-Second Engineer.

Effective Period: 7/1/2021 - 6/30/2022
Wage Rate per Hour: $74.81
Supplemental Benefit Rate per Hour: $34.55
Supplemental Note: $63.15 overtime hours
Shift Wage Rate: $119.70

Operating Engineer - Road & Heavy Construction XVII

On-Site concrete plant engineer, On-site Asphalt Plant Engineer, and Vibratory console.

Effective Period: 7/1/2021 - 6/30/2022
Wage Rate per Hour: $75.36
Supplemental Benefit Rate per Hour: $34.55
Supplemental Note: $63.15 overtime hours
Shift Wage Rate: $120.58

Operating Engineer - Road & Heavy Construction XVIII

Tower Crane

Effective Period: 7/1/2021 - 6/30/2022
Wage Rate per Hour: $107.75
Supplemental Benefit Rate per Hour: $34.55
Supplemental Note: $63.15 overtime hours
Shift Wage Rate: $172.40

Operating Engineer - Paving I

Asphalt Spreaders, Autograde (C.M.I.), Roto/Mil

Effective Period: 7/1/2021 - 6/30/2022
Wage Rate per Hour: $83.59
Supplemental Benefit Rate per Hour: $34.55
Supplemental Note: $63.15 overtime hours
Shift Wage Rate: $133.74

Operating Engineer - Paving II

Asphalt Roller

Effective Period: 7/1/2021 - 6/30/2022
Wage Rate per Hour: $81.47
Supplemental Benefit Rate per Hour: $34.55
Supplemental Note: $63.15 overtime hours
Shift Wage Rate: $130.35

Operating Engineer - Paving III

Asphalt Plants

Effective Period: 7/1/2021 - 6/30/2022
Wage Rate per Hour: $69.04
Supplemental Benefit Rate per Hour: $34.55
Supplemental Note: $63.15 overtime hours
Shift Wage Rate: $110.46

Operating Engineer - Concrete I

Cranes

Effective Period: 7/1/2021 - 6/30/2022
Wage Rate per Hour: $89.31
Supplemental Benefit Rate per Hour: $34.55
Supplemental Note: $63.15 overtime hours

Operating Engineer - Concrete II

Compressors

Effective Period: 7/1/2021 - 6/30/2022
Wage Rate per Hour: $53.51
Supplemental Benefit Rate per Hour: $34.55
Supplemental Note: $63.15 overtime hours

Operating Engineer - Concrete III

Micro-traps (Negative Air Machines), Vac-All Remediation System.

Effective Period: 7/1/2021 - 6/30/2022
Wage Rate per Hour: $71.55
Supplemental Benefit Rate per Hour: $34.55
Supplemental Note: $63.15 overtime hours

Operating Engineer - Steel Erection I

Three Drum Derricks

Effective Period: 7/1/2021 - 6/30/2022
Wage Rate per Hour: $92.36
Supplemental Benefit Rate per Hour: $34.55
Supplemental Note: $63.15 overtime hours
Shift Wage Rate: $147.78

Operating Engineer - Steel Erection II

Cranes, 2 Drum Derricks, Hydraulic Cranes, Fork Lifts and Boom Trucks.

Effective Period: 7/1/2021 - 6/30/2022
Wage Rate per Hour: $88.77
Supplemental Benefit Rate per Hour: $34.55
Supplemental Note: $63.15 overtime hours
Shift Wage Rate: $142.03

Operating Engineer - Steel Erection III

Compressors, Welding Machines.

Effective Period: 7/1/2021 - 6/30/2022
Wage Rate per Hour: $53.07
Supplemental Benefit Rate per Hour: $34.55
Supplemental Note: $63.15 overtime hours
Shift Wage Rate: $84.91

Operating Engineer - Steel Erection IV

Compressors - Not Combined with Welding Machine. (Public Works Only)

Effective Period: 7/1/2021 - 6/30/2022
Wage Rate per Hour: $50.56
Supplemental Benefit Rate per Hour: $34.55
Supplemental Note: $63.15 overtime hours
Shift Wage Rate: $80.90

Operating Engineer - Building Work I

Forklifts, Plaster (Platform machine), Plaster Bucket, Concrete Pump and all other equipment used for hoisting material.

Effective Period: 7/1/2021 - 6/30/2022
Wage Rate per Hour: $70.94
Supplemental Benefit Rate per Hour: $34.55
Supplemental Note: $63.15 overtime hours

Operating Engineer - Building Work II

Compressors, Welding Machines (Cutting Concrete-Tank Work), Paint Spraying, Sandblasting, Pumps (with the exclusion of Concrete Pumps), All Engines irrespective of Power (Power-Pac) used to drive Auxiliary Equipment, Air, Hydraulic, Jacking System, etc.

Effective Period: 7/1/2021 - 6/30/2022
Wage Rate per Hour: $53.12
Supplemental Benefit Rate per Hour: $34.55
Supplemental Note: $63.15 overtime hours

Operating Engineer - Building Work III

Double Drum

Effective Period: 7/1/2021 - 6/30/2022
Wage Rate per Hour: $84.16
Supplemental Benefit Rate per Hour: $34.55
Supplemental Note: $63.15 overtime hours

Operating Engineer - Building Work IV

Stone Derrick, Cranes, Hydraulic Cranes Boom Trucks.

Effective Period: 7/1/2021 - 6/30/2022
Wage Rate per Hour: $89.10
Supplemental Benefit Rate per Hour: $34.55
Supplemental Note: $63.15 overtime hours

Operating Engineer - Building Work V

Dismantling and Erection of Cranes, Relief Engineer.

Effective Period: 7/1/2021 - 6/30/2022
Wage Rate per Hour: $78.81
Supplemental Benefit Rate per Hour: $34.55
Supplemental Note: $63.15 overtime hours

Operating Engineer - Building Work VI

4 Pole Hoist, Single Drum Hoists.

Effective Period: 7/1/2021 - 6/30/2022
Wage Rate per Hour: $77.98
Supplemental Benefit Rate per Hour: $34.55

Supplemental Note: $63.15 overtime hours

Operating Engineer - Building Work VII

Rack & Pinion and House Cars

Effective Period: 7/1/2021 - 6/30/2022
Wage Rate per Hour: $62.01
Supplemental Benefit Rate per Hour: $34.55
Supplemental Note: $63.15 overtime hours
For New House Car projects Wage Rate per Hour $49.50
For New House Car projects: Supplemental Benefit overtime hours: $48.85

Overtime Description

On jobs of more than one shift, if an Employee fails to report for work through any cause over which the Employer has no control, the Employee on duty will continue to work at the rate of single time.

For House Cars and Rack & Pinion only: Overtime paid at time and one-half for all hours in excess of eight hours in a day, Saturday, Sunday and Holidays worked.

Overtime

Double time the regular rate after an 8 hour day.
Double time the regular time rate for Saturday.
Double time the regular rate for Sunday.
Double time the regular rate for work on the following holiday(s).

Paid Holidays

New Year's Day
Martin Luther King Jr. Day
President's Day
Memorial Day
Independence Day
Labor Day
Columbus Day
Veteran's Day
Thanksgiving Day
Day after Thanksgiving
Christmas Day
Employees must work at least one day in the payroll week in which the holiday occurs to receive the paid holiday

Shift Rates

When two (2) or more shifts are employed, single time will be paid for each shift.
For Steel Erection Only: Shifts may be worked at the single time rate at other than the regular working hours (8:00 A.M. to 4:30 P.M.) on the following work ONLY: Heavy construction jobs on work below the street level, over railroad tracks and on building jobs.

(Operating Engineer Local #14)

FLOOR COVERER
(Interior vinyl composition tile, sheath vinyl linoleum and wood parquet tile including site preparation and synthetic turf not including site preparation)

Floor Coverer

Effective Period: 7/1/2021 - 6/30/2022
Wage Rate per Hour: $54.75
Supplemental Benefit Rate per Hour: $47.13

Overtime
Time and one half the regular rate after an 8 hour day.
Time and one half the regular rate for Saturday.
Double time the regular rate for Sunday.
Saturday may be used as a make-up day at straight time when a day is lost during that week to inclement weather.

Overtime Holidays
Double time the regular rate for work on the following holiday(s).
New Year's Day
President's Day
Memorial Day
Independence Day
Labor Day
Columbus Day
Presidential Election Day
Thanksgiving Day
Day after Thanksgiving
Day before Christmas
Christmas Day
Day before New Year's Day

Shift Rates
Two shifts may be utilized with the first shift working 8 a.m. to the end of the shift at straight time rate of pay. The wage rate for the second shift consisting of 7 hours shall be paid at 114.29% of straight time wage rate. The wage rate for the second shift consisting of 8 hours shall be paid 112.5% of the straight time wage rate. When it is not possible to conduct alteration or repair work during regular working hours in a building occupied by tenants, the rule for the second shift will apply.

(Carpenters District Council)

GLAZIER
(New Construction, Remodeling, and Alteration)

Glazier

Effective Period: 7/1/2021 - 6/30/2022
Wage Rate per Hour: $46.55
Supplemental Benefit Rate per Hour: $47.74
Supplemental Note: Supplemental Benefit Overtime Rate: $71.62

Overtime
Time and one half the regular rate after an 8 hour day.
Time and one half the regular rate for Saturday.
Time and one half the regular rate for Sunday.

Overtime Holidays
Time and one half the regular rate for work on the following holiday(s).
New Year's Day
President's Day
Memorial Day
Independence Day
Thanksgiving Day
Day after Thanksgiving
Christmas Day

Paid Holidays
None

Shift Rates
Shifts shall be any 8 consecutive hours after the normal working day for which the Glazier shall receive 9 hours pay for 8 hours worked.

(Local #1281)

GLAZIER - REPAIR & MAINTENANCE
(For the Installation of Glass - All repair and maintenance work on a particular building.)

Craft Jurisdiction for repair, maintenance and fabrication

Plate glass replacement, Residential glass replacement, Residential mirrors and shower doors, Storm windows and storm doors, Residential replacement windows, Herculite door repairs, Door closer repairs, Retrofit apartment house (non-commercial buildings), Glass tinting.

Effective Period: 7/1/2021 - 6/30/2022
Wage Rate per Hour: $26.40
Supplemental Benefit Rate per Hour: $24.09

Overtime

Time and one half the regular rate after an 8 hour day.
Time and one half the regular rate for Sunday.
Time and one half the regular rate for work on the following holiday(s).
Time and one half the regular hourly rate after 40 straight time hours in any work week.

Paid Holidays

New Year's Day
President's Day
Memorial Day
Independence Day
Labor Day
Thanksgiving Day
Day after Thanksgiving
Christmas Day
Employees must work at least one day in the payroll week in which the holiday occurs to receive the paid holiday

(Local #1281)

HAZARDOUS MATERIAL HANDLER
(Removal, abatement, encapsulation or decontamination of asbestos, lead, mold, or other toxic or hazardous waste/materials)

Handler

Effective Period: 7/1/2021 - 6/30/2022
Wage Rate per Hour: $38.05
Supplemental Benefit Rate per Hour: $17.75

Overtime

Time and one half the regular rate after an 8 hour day.
Time and one half the regular rate for Sunday.
Time and one half the regular hourly rate after 40 straight time hours in any work week.

Overtime Holidays

Time and one half the regular rate for work on the following holiday(s).
New Year's Day
Good Friday
Memorial Day
Independence Day
Labor Day
Thanksgiving Day
Christmas Day
Easter

Paid Holidays
None

(Local #78 and Local #12A)

HEAT AND FROST INSULATOR

Heat & Frost Insulator

Effective Period: 7/1/2021 - 6/30/2022
Wage Rate per Hour: $62.21
Supplemental Benefit Rate per Hour: $41.91

Overtime Description
Double time shall be paid for supplemental benefits during overtime work.
8th hour paid at time and one half.

Overtime
Time and one half the regular rate after a 7 hour day.
Time and one half the regular rate for Saturday.
Double time the regular rate for Sunday.

Overtime Holidays
Double time the regular rate for work on the following holiday(s).
New Year's Day
Martin Luther King Jr. Day
President's Day
Memorial Day
Independence Day
Columbus Day
Veteran's Day
Thanksgiving Day
Day after Thanksgiving
Christmas Day

Triple time the regular rate for work on the following holiday(s).
Labor Day

Paid Holidays
None

Shift Rates
The first shift shall work seven hours at the regular straight time rate. The second and third shift shall work seven hours the regular straight time hourly rate plus a fourteen percent wage and benefit premium.There must be a first shift to work the second shift, and a second shift to work the third shift. Off-hour jobs in occupied

buildings may be worked on weekdays with an increment of one-dollar ($1.00) per hour and eight (8) hours pay for seven (7) hours worked.

(Local #12) (BCA)

HOUSE WRECKER
(TOTAL DEMOLITION)

House Wrecker - Tier A

On all work sites the first, second, eleventh and every third House Wrecker thereafter will be Tier A House Wreckers (i.e. 1st, 2nd, 11th, 14th etc). Other House Wreckers may be Tier B House Wreckers.

Effective Period: 7/1/2021 - 6/30/2022
Wage Rate per Hour: $37.63
Supplemental Benefit Rate per Hour: $30.37

House Wrecker - Tier B

Effective Period: 7/1/2021 - 6/30/2022
Wage Rate per Hour: $26.86
Supplemental Benefit Rate per Hour: $22.78

Overtime
Time and one half the regular rate after an 8 hour day.
Time and one half the regular rate for Saturday.
Double time the regular rate for Sunday.

Overtime Holidays
Double time the regular rate for work on the following holiday(s).
New Year's Day
President's Day
Memorial Day
Independence Day
Labor Day
Thanksgiving Day
Christmas Day

Paid Holidays
None

(Mason Tenders District Council)

IRON WORKER - ORNAMENTAL

Iron Worker - Ornamental

Effective Period: 7/1/2021 - 6/30/2022
Wage Rate per Hour: $46.15
Supplemental Benefit Rate per Hour: $59.62
Supplemental Note: Supplemental benefits are to be paid at the applicable overtime rate when overtime is in effect.

Overtime Description
Time and one half the regular rate after a 7 hour day for a maximum of two hours on any regular work day (the 8th and 9th hour) and double time shall be paid for all work on a regular work day thereafter, time and one half the regular rate for Saturday for the first seven hours of work and double time shall be paid for all work on a Saturday thereafter.

Overtime
Double time the regular rate for Sunday.

Overtime Holidays
Double time the regular rate for work on the following holiday(s).
New Year's Day
President's Day
Memorial Day
Independence Day
Labor Day
Thanksgiving Day
Christmas Day

Paid Holidays
None

Shift Rates
When two or three shifts are employed on a job, Monday through Friday, the second and third shift are paid eight and one half (8 ½) hours at the straight time rate for seven (7) hours of work, and ten (10) hours at the straight time rate for eight (8) hours of work. When it is not possible to conduct alteration or repair work during regular working hours in a building occupied by tenants, eight hours will be paid at straight time rate for seven hours of work, and all overtime shall be paid at time and one-half the regular straight time rates but on Sundays and Holidays, time and one-half the regular straight time rate shall be paid for all work up to seven (7) hours and double time shall be paid for all work thereafter.

(Local #580)

IRON WORKER - STRUCTURAL

Iron Worker - Structural

Effective Period: 7/1/2021 - 6/30/2022
Wage Rate per Hour: $54.20
Supplemental Benefit Rate per Hour: $82.81
Supplemental Note: Supplemental benefits are to be paid at the applicable overtime rate when overtime is in effect.

Overtime Description

Monday through Friday- the first eight hours are paid at straight time, the 9th and 10th hours are paid at time and one-half the regular rate, all additional weekday overtime is paid at double the regular rate. Saturdays- the first eight hours are paid at time and one-half the regular rate, double time thereafter. Sunday-all shifts are paid at double time. Four Days a week at Ten (10) hours straight time is allowed.

Overtime

Time and one half the regular rate after an 8 hour day.
Time and one half the regular rate for Saturday.
Double time the regular rate for Sunday.

Overtime Holidays

Double time the regular rate for work on the following holiday(s).
New Year's Day
President's Day
Memorial Day
Independence Day
Labor Day
Thanksgiving Day
Christmas Day

Paid Holidays

1/2 day on Christmas Eve if work is performed in the A.M.
1/2 day on New Year's Eve if work is performed in the A.M.

Shift Rates

Monday through Friday - First Shift: First eight hours are paid at straight time, the 9th & 10th hours are paid at time and a half, double time paid thereafter. Second and third Shifts: First eight hours are paid at time and one-half, double time thereafter. Saturdays: All shifts, first eight hours paid at time and one-half, double time thereafter: Sunday all shifts are paid at double time.

Four (4), ten (10) hour days may be worked at straight time during a week, Monday thru Thursday.

(Local #40 & #361)

LABORER
(Foundation, Concrete, Excavating, Street Pipe Layer and Common)

Laborer

Excavation and foundation work for buildings, heavy construction, engineering work, and hazardous waste removal in connection with the above work. Landscaping tasks in connection with heavy construction work, engineering work and building projects. Projects include, but are not limited to pollution plants, sewers, parks, subways, bridges, highways, etc.

Effective Period: 7/1/2021 - 6/30/2022
Wage Rate per Hour: $43.50
Supplemental Benefit Rate per Hour: $48.63

Overtime
Time and one half the regular rate after an 8 hour day.
Time and one half the regular rate for Saturday.
Double time the regular rate for Sunday.

Overtime Holidays
Double time the regular rate for work on the following holiday(s).
New Year's Day
Memorial Day
Independence Day
Labor Day
Columbus Day
Thanksgiving Day
Christmas Day

Paid Holidays
Labor Day
Thanksgiving Day

Shift Rates
When two shifts are employed, single time rate shall be paid for each shift. When three shifts are found necessary, each shift shall work seven and one half hours (7 ½), but shall be paid for eight (8) hours of labor, and be permitted one half hour for lunch.

(Local #731)

LANDSCAPING
(Landscaping tasks, such as tree pruning, tree removing and spraying in connection with Green Infrastructure maintenance and the planting of street

trees and trees in City parks, but not when such activities are performed as part of construction or reconstruction projects.)

Landscaper (Year 6 and above)

Effective Period: 7/1/2021 - 6/30/2022
Wage Rate per Hour: $33.90
Supplemental Benefit Rate per Hour: $17.05

Landscaper (Year 3 - 5)

Effective Period: 7/1/2021 - 6/30/2022
Wage Rate per Hour: $32.81
Supplemental Benefit Rate per Hour: $17.05

Landscaper (up to 3 years)

Effective Period: 7/1/2021 - 6/30/2022
Wage Rate per Hour: $30.06
Supplemental Benefit Rate per Hour: $17.05

Groundperson

Effective Period: 7/1/2021 - 6/30/2022
Wage Rate per Hour: $30.06
Supplemental Benefit Rate per Hour: $17.05

Tree Remover / Pruner

Effective Period: 7/1/2021 - 6/30/2022
Wage Rate per Hour: $39.42
Supplemental Benefit Rate per Hour: $17.05

Landscaper Sprayer (Pesticide Applicator)

Effective Period: 7/1/2021 - 6/30/2022
Wage Rate per Hour: $28.41
Supplemental Benefit Rate per Hour: $17.05

Watering - Plant Maintainer

Effective Period: 7/1/2021 - 6/30/2022
Wage Rate per Hour: $22.88
Supplemental Benefit Rate per Hour: $17.05

Overtime Description

For all overtime work performed, supplemental benefits shall include an additional seventy-five ($0.75) cents per hour.

Overtime

Time and one half the regular rate after an 8 hour day.
Time and one half the regular rate for Saturday.
Double time the regular rate for Sunday.
Time and one half the regular rate for work on a holiday plus the day's pay.

Paid Holidays

New Year's Day
Memorial Day
Independence Day
Labor Day
Thanksgiving Day
Christmas Day

Shift Rates

Work performed on a 4pm to 12am shift has a 15% differential. Work performed on a 12am to 8am shift has a 20% differential.

(Local #175)

MARBLE MECHANIC

Marble Setter

Effective Period: 7/1/2021 - 6/30/2022
Wage Rate per Hour: $56.73
Supplemental Benefit Rate per Hour: $41.76

Marble Finisher

Effective Period: 7/1/2021 - 6/30/2022
Wage Rate per Hour: $44.32
Supplemental Benefit Rate per Hour: $38.96

Marble Polisher

Effective Period: 7/1/2021 - 6/30/2022
Wage Rate per Hour: $42.91
Supplemental Benefit Rate per Hour: $31.61

Marble Maintenance Finisher

Effective Period: 7/1/2021 - 6/30/2022
Wage Rate per Hour: $26.73
Supplemental Benefit Rate per Hour: $13.59

Overtime Description
Supplemental Benefit contributions are to be made at the applicable overtime rates.

Overtime
Time and one half the regular rate after an 8 hour day.
Time and one half the regular rate for Saturday.
Double time the regular rate for Sunday.

Overtime Holidays
Double time the regular rate for work on the following holiday(s).
New Year's Day
President's Day
Good Friday
Memorial Day
Independence Day
Labor Day
Columbus Day
Veteran's Day
Thanksgiving Day
Day after Thanksgiving
Christmas Day

Paid Holidays
None

(Local #7)

MASON TENDER

Mason Tender

Effective Period: 7/1/2021 - 6/30/2022
Wage Rate per Hour: $39.20
Supplemental Benefit Rate per Hour: $31.24

Overtime
Time and one half the regular rate after an 8 hour day.
Time and one half the regular rate for Saturday.
Double time the regular rate for Sunday.
Saturday may be used as a make-up day at straight time when a day is lost during that week to inclement weather.

Overtime Holidays

Double time the regular rate for work on the following holiday(s).
New Year's Day
President's Day
Memorial Day
Independence Day
Labor Day
Thanksgiving Day
Christmas Day

Paid Holidays

None

Shift Rates

The employer may work two (2) shifts with the first shift at the straight time wage rate and the second shift receiving eight (8) hours paid for seven (7) hours work at the straight time wage rate. When it is not possible to conduct alteration work during regular working hours in a building occupied by tenants, the rule for the second shift will apply.

(Local #79)

MASON TENDER (INTERIOR DEMOLITION WORKER)

Mason Tender Tier A

Tier A Interior Demolition Worker performs all burning, chopping, and other technically skilled tasks related to interior demolition work.

Effective Period: 7/1/2021 - 6/30/2022
Wage Rate per Hour: $37.29
Supplemental Benefit Rate per Hour: $25.75

Mason Tender Tier B

Tier B Interior Demolition Worker performs manual work and work incidental to demolition work, such as loading and carting of debris from the work site to an area where it can be loaded in to bins/trucks for removal. Also performs clean-up of the site when demolition is completed.

Effective Period: 7/1/2021 - 6/30/2022
Wage Rate per Hour: $26.48
Supplemental Benefit Rate per Hour: $20.07

Overtime

Time and one half the regular rate after an 8 hour day.
Time and one half the regular rate for Sunday.

Overtime Holidays
Double time the regular rate for work on the following holiday(s).
New Year's Day
President's Day
Memorial Day
Independence Day
Labor Day
Thanksgiving Day
Christmas Day

Paid Holidays
None

(Local #79)

METALLIC LATHER

Metallic Lather

Effective Period: 7/1/2021 - 6/30/2022
Wage Rate per Hour: $46.40
Supplemental Benefit Rate per Hour: $49.80
Supplemental Note: For time and one half overtime - $61.55 For double overtime - $77.10

Overtime
Time and one half the regular rate after an 8 hour day.
Time and one half the regular rate for Saturday.
Double time the regular rate for Sunday.

Overtime Holidays
Double time the regular rate for work on the following holiday(s).
New Year's Day
President's Day
Memorial Day
Independence Day
Labor Day
Columbus Day
Thanksgiving Day
Christmas Day

Paid Holidays
1/2 day on Christmas Eve if work is performed in the A.M.
1/2 day on New Year's Eve if work is performed in the A.M.

Shift Rates

Off-shift work outside of normal working hours shall receive straight time rate plus $12 per hour for the first eight (8) hours.

(Local #46)

MILLWRIGHT

Millwright

Effective Period: 7/1/2021 - 6/30/2022
Wage Rate per Hour: $57.00
Supplemental Benefit Rate per Hour: $54.76

Overtime
Time and one half the regular rate after an 8 hour day.
Time and one half the regular rate for Saturday.
Double time the regular rate for Sunday.
Saturday may be used as a make-up day at straight time when a day is lost during that week to inclement weather.

Overtime Holidays
Double time the regular rate for work on the following holiday(s).
New Year's Day
President's Day
Good Friday
Memorial Day
Independence Day
Labor Day
Columbus Day
Presidential Election Day
Veteran's Day
Thanksgiving Day
Christmas Day

Paid Holidays
1/2 day on Christmas Eve if work is performed in the A.M.
1/2 day on New Year's Eve if work is performed in the A.M.

Shift Rates
Second and third shifts receives the straight time rate of pay plus fifteen (15%) percent allowing for one half hour for a meal. There must be a first shift to work a second and third shift. All additional hours worked shall be paid at the time and one-half rate of pay plus fifteen (15%) percent for weekday hours.

(Local #740)

MOSAIC MECHANIC

Mosaic Mechanic - Mosaic & Terrazzo Mechanic

Effective Period: 7/1/2021 - 6/30/2022
Wage Rate per Hour: $51.66
Supplemental Benefit Rate per Hour: $43.67

Mosaic Mechanic - Mosaic & Terrazzo Finisher

Effective Period: 7/1/2021 - 6/30/2022
Wage Rate per Hour: $50.06
Supplemental Benefit Rate per Hour: $43.67

Mosaic Mechanic - Machine Operator Grinder

Effective Period: 7/1/2021 - 6/30/2022
Wage Rate per Hour: $50.06
Supplemental Benefit Rate per Hour: $43.67

Overtime

Time and one half the regular rate after a 7 hour day.
Time and one half the regular rate for Saturday.
Double time the regular rate for Sunday.

Overtime Holidays

Double time the regular rate for work on the following holiday(s).
New Year's Day
Washington's Birthday
Good Friday
Independence Day
Labor Day
Columbus Day
Veteran's Day
Thanksgiving Day
Day after Thanksgiving
Christmas Day

Paid Holidays

None

(Local #7)

PAINTER

Painter - Brush & Roller

Effective Period: 7/1/2021 - 6/30/2022
Wage Rate per Hour: $43.00
Supplemental Benefit Rate per Hour: $36.70
Supplemental Note: $43.79 on overtime

Spray & Scaffold / Decorative / Sandblast

Effective Period: 7/1/2021 - 6/30/2022
Wage Rate per Hour: $46.00
Supplemental Benefit Rate per Hour: $36.70
Supplemental Note: $43.79 on overtime

Overtime
Time and one half the regular rate after a 7 hour day.
Time and one half the regular rate for Saturday.
Time and one half the regular rate for Sunday.

Overtime Holidays
Time and one half the regular rate for work on the following holiday(s).
New Year's Day
President's Day
Memorial Day
Independence Day
Labor Day
Columbus Day
Thanksgiving Day
Christmas Day

Paid Holidays
None

(District Council of Painters #9)

PAINTER - LINE STRIPING (ROADWAY)

Striping - Machine Operator

Effective Period: 7/1/2021 - 6/30/2022
Wage Rate per Hour: $37.00
Supplemental Benefit Rate per Hour: $14.37
Supplemental Note: Overtime Supplemental Benefit rate - $16.25

Lineperson (Thermoplastic)

Effective Period: 7/1/2021 - 6/30/2022
Wage Rate per Hour: $41.00
Supplemental Benefit Rate per Hour: $14.37
Supplemental Note: Overtime Supplemental Benefit rate - $16.25

Striping Assistant & Traffic Safety

Effective Period: 7/1/2021 - 6/30/2022
Wage Rate per Hour: $36.75
Supplemental Benefit Rate per Hour: $14.37
Supplemental Note: Overtime Supplemental Benefit rate - $16.25

Overtime Description

Time and one half the regular rate for all work in excess of ten (10) straight time hours per day and in excess of forty (40) straight time hours per week.

For Paid Holidays: Employees will only receive Holiday Pay for holidays not worked if said employee worked both the regularly scheduled workday before and after the holiday.

Overtime

Time and one half the regular rate for Saturday.
Time and one half the regular rate for Sunday.
Time and one half the regular rate for work on the following holiday(s).

Paid Holidays

New Year's Day
Good Friday
Memorial Day
Independence Day
Labor Day
Columbus Day
Presidential Election Day
Thanksgiving Day
Christmas Day

Vacation

Employees with one to two years service shall accrue vacation based on hours worked: 250 hours worked - 1 day vacation; 500 hours worked - 2 days vacation; 750 hours worked - 3 days vacation; 900 hours worked - 4 days vacation; 1,000 hours worked - 5 days vacation. Employees with two to five years service receive two weeks vacation. Employees with five to twenty years service receive three weeks vacation. Employees with twenty to twenty-five years service receive four weeks vacation. Employees with 25 or more years service receive five weeks vacation.

(Local #1010)

PAINTER - METAL POLISHER

METAL POLISHER

Effective Period: 7/1/2021 - 6/30/2022
Wage Rate per Hour: $31.88
Supplemental Benefit Rate per Hour: $10.29

METAL POLISHER - NEW CONSTRUCTION

Effective Period: 7/1/2021 - 6/30/2022
Wage Rate per Hour: $32.83
Supplemental Benefit Rate per Hour: $10.29

METAL POLISHER - SCAFFOLD OVER 34 FEET

Effective Period: 7/1/2021 - 6/30/2022
Wage Rate per Hour: $35.38
Supplemental Benefit Rate per Hour: $10.29

ASSISTANT METAL POLISHER

Effective Period: 7/1/2021 - 6/30/2022
Wage Rate per Hour: $24.66
Supplemental Benefit Rate per Hour: $9.81

ASSISTANT METAL POLISHER - NEW CONSTRUCTION

Effective Period: 7/1/2021 - 6/30/2022
Wage Rate per Hour: $25.41
Supplemental Benefit Rate per Hour: $9.81

ASSISTANT METAL POLISHER - SCAFFOLD OVER 34 FEET

Effective Period: 7/1/2021 - 6/30/2022
Wage Rate per Hour: $27.16
Supplemental Benefit Rate per Hour: $9.81

Overtime Description

All work performed on Saturdays shall be paid at time-in-a half. The exception being; for suspended scaffold work and work deemed as a construction project; an eight (8) hour shift lost during the week due to circumstances beyond the control of the employer, up to a maximum of eight (8) hours per week, may be worked on Saturday at the straight time rate.

Overtime

Time and one half the regular rate after an 8 hour day.
Time and one half the regular rate for Saturday.

Double time the regular rate for Sunday.
Saturday may be used as a make-up day at straight time when a day is lost during that week to inclement weather.
Triple time the regular rate for work on the following holiday(s).

Paid Holidays

New Year's Day
President's Day
Memorial Day
Independence Day
Labor Day
Columbus Day
Election Day
Thanksgiving Day
Day after Thanksgiving
Christmas Day

Shift Rates

Four Days a week at Ten (10) hours straight a day.

Local 8A-28A

PAINTER - SIGN

Sign Painter

Effective Period: 7/1/2021 - 6/30/2022
Wage Rate per Hour: $44.32
Supplemental Benefit Rate per Hour: $21.70

Assistant Sign Painter

Effective Period: 7/1/2021 - 6/30/2022
Wage Rate per Hour: $37.66
Supplemental Benefit Rate per Hour: $19.93

Overtime Description

If any employee is required to work on any of the paid holidays then the employee shall receive double time rate of wages as well as the holiday pay for that day.

Overtime

Time and one half the regular rate after an 8 hour day.
Time and one half the regular rate for Saturday.
Time and one half the regular rate for Sunday.

Paid Holidays

New Year's Day
President's Day
Memorial Day
Independence Day
Labor Day
Columbus Day
Election Day
Thanksgiving Day
Day after Thanksgiving
Christmas Day

Vacation

At least 1 year of employment.....1 week
2 years or more of employment.....2 weeks
8 years or more of employment.....3 weeks

(Local #8A-28A)

PAINTER - STRUCTURAL STEEL

Painters on Structural Steel

Effective Period: 7/1/2021 - 9/30/2021
Wage Rate per Hour: $51.50
Supplemental Benefit Rate per Hour: $48.28

Effective Period: 10/1/2021 - 6/30/2022
Wage Rate per Hour: $53.00
Supplemental Benefit Rate per Hour: $49.83

Painter - Power Tool

Effective Period: 7/1/2021 - 9/30/2021
Wage Rate per Hour: $57.50
Supplemental Benefit Rate per Hour: $48.28
Overtime Wage Rate: $6.00 above the "Painters on Structural Steel" overtime rate.

Effective Period: 10/1/2021 - 6/30/2022
Wage Rate per Hour: $59.50
Supplemental Benefit Rate per Hour: $49.83
Overtime Wage Rate: $6.50 above the "Painters on Structural Steel" overtime rate.

Overtime Description

Supplemental Benefits shall be paid for each hour worked, up to forty (40) hours per week for the period of May 1st to November 15th or up to fifty (50) hours per week for the period of November 16th to April 30th.

Overtime

Time and one half the regular rate after a 7 hour day.
Time and one half the regular rate for Saturday.
Time and one half the regular rate for Sunday.

Overtime Holidays

Double time the regular rate for work on the following holiday(s).
New Year's Day
Memorial Day
Independence Day
Labor Day
Thanksgiving Day
Christmas Day

Paid Holidays

None

Shift Rates

Second shift is paid at regular hourly wage rates plus a ten percent (10%) differential. There must be a first shift in order to work a second shift.

(Local #806)

PAPERHANGER

Paperhanger

Effective Period: 7/1/2021 - 6/30/2022
Wage Rate per Hour: $46.87
Supplemental Benefit Rate per Hour: $37.49
Supplemental Note: Supplemental benefits are to be paid at the appropriate straight time and overtime rate.

Overtime

Time and one half the regular rate after a 7 hour day.
Time and one half the regular rate for Saturday.
Time and one half the regular rate for Sunday.

Overtime Holidays

Time and one half the regular rate for work on the following holiday(s).
New Year's Day
President's Day
Memorial Day
Independence Day
Labor Day
Thanksgiving Day
Day after Thanksgiving
Christmas Day

Paid Holidays
None

Shift Rates
Evening shift - 4:30 P.M. to 12:00 Midnight (regular rate of pay); any work performed before 7:00 A.M. shall be at time and one half the regular base rate of pay.

(District Council of Painters #9)

PAVER AND ROADBUILDER

Paver & Roadbuilder - Formsetter

Effective Period: 7/1/2021 - 6/30/2022
Wage Rate per Hour: $47.85
Supplemental Benefit Rate per Hour: $48.51
Supplemental Note: For time and one half overtime - $52.64 For double overtime - $56.76

Paver & Roadbuilder - Laborer

Paving and road construction work, regardless of material used, including but not limited to preparation of job sites, removal of old surfaces, asphalt and/or concrete, by whatever method, including but not limited to milling; laying of concrete; laying of asphalt for temporary, patchwork, and utility paving (but not production paving); site preparation and incidental work for installation of rubberized materials and similar surfaces; installation and repair of temporary construction fencing; slurry/seal coating, paving stones, maintenance of safety surfaces; play equipment installation, and other related work.

Effective Period: 7/1/2021 - 6/30/2022
Wage Rate per Hour: $43.98
Supplemental Benefit Rate per Hour: $48.51
Supplemental Note: For time and one half overtime - $52.64 For double overtime - $56.76

Production Paver & Roadbuilder - Screed Person

(Production paving is asphalt paving when using a paving machine or on a project where a paving machine is traditionally used)

Adjustment of paving machinery on production paving jobs.

Effective Period: 7/1/2021 - 6/30/2022
Wage Rate per Hour: $48.45
Supplemental Benefit Rate per Hour: $48.51
Supplemental Note: For time and one half overtime - $52.64 For double overtime - $56.76

Production Paver & Roadbuilder - Raker

Effective Period: 7/1/2021 - 6/30/2022
Wage Rate per Hour: $47.85
Supplemental Benefit Rate per Hour: $48.51
Supplemental Note: For time and one half overtime - $52.64 For double overtime - $56.76

Production Paver & Roadbuilder - Shoveler

General laborer (except removal of surfaces - see Paver and Roadbuilder-Laborer) including but not limited to tamper, AC paint and liquid tar work.

Effective Period: 7/1/2021 - 6/30/2022
Wage Rate per Hour: $43.98
Supplemental Benefit Rate per Hour: $48.51
Supplemental Note: For time and one half overtime - $52.64 For double overtime - $56.76

Overtime Description

If an employee works New Year's Day or Christmas Day, they receive the single time rate plus 25%.

For Paid Holidays: Holiday pay for all holidays shall be prorated based two hours per day for each day worked in the holiday week, not to exceed 8 hours of holiday pay.

Overtime

Time and one half the regular rate after an 8 hour day.
Time and one half the regular rate for Saturday.
Double time the regular rate for Sunday.

Overtime Holidays

Double time the regular rate for work on the following holiday(s).
Memorial Day
Independence Day
Labor Day
Columbus Day
Thanksgiving Day

Paid Holidays

Memorial Day
Independence Day
Labor Day
Thanksgiving Day

Shift Rates

When two shifts are employed, the work period for each shift shall be a continuous eight (8) hours. When three shifts are employed, each shift will work seven and one half (7 ½) hours but will be paid for eight (8) hours at the straight time rate since only one half (1/2) hour is allowed for meal time.
When two or more shifts are employed, single time will be paid for each shift.

Night Work - On night work, the first eight (8) hours of work will be paid for at the single time rate, except that production paving work shall be paid at 10% over the single time rate for the screed person, rakers and shovelers directly involved only. This differential is to be paid when there is only one shift and the shift works at night. All other workers will be exempt. Hours worked over eight (8) hours during said shift shall be paid for at the time and one-half rate.

(Local #1010)

PLASTERER

Plasterer

Effective Period: 7/1/2021 - 7/31/2021
Wage Rate per Hour: $45.73
Supplemental Benefit Rate per Hour: $30.37

Effective Period: 8/1/2021 - 6/30/2022
Wage Rate per Hour: $46.00
Supplemental Benefit Rate per Hour: $28.20

Overtime
Time and one half the regular rate after an 8 hour day.
Time and one half the regular rate for Saturday.
Double time the regular rate for Sunday.
Saturday may be used as a make-up day at straight time when a day is lost during that week to inclement weather.

Overtime Holidays
Double time the regular rate for work on the following holiday(s).
New Year's Day
President's Day
Memorial Day
Independence Day
Labor Day
Thanksgiving Day
Christmas Day

Paid Holidays
None

Shift Rates
When it is not possible to conduct work during regular working hours (between 6:30am and 4:30pm), a shift differential shall be paid at the regular hourly rate plus a twelve percent (12%) per hour differential. Workers on shift work shall be allowed a paid one-half hour meal break.

(Local #262)

PLASTERER - TENDER

Plasterer - Tender

Effective Period: 7/1/2021 - 6/30/2022
Wage Rate per Hour: $39.20
Supplemental Benefit Rate per Hour: $31.24

Overtime
Time and one half the regular rate after an 8 hour day.
Time and one half the regular rate for Saturday.
Double time the regular rate for Sunday.
Saturday may be used as a make-up day at straight time when a day is lost during that week to inclement weather.

Overtime Holidays
Double time the regular rate for work on the following holiday(s).
New Year's Day
Washington's Birthday
Memorial Day
Independence Day
Labor Day
Presidential Election Day
Thanksgiving Day
Christmas Day

Paid Holidays
None

Shift Rates
When work commences outside regular work hours, workers receive an hour additional (differential) wage and supplement payment. Eight hours pay for seven hours work or nine hours pay for eight hours work.

(Mason Tenders District Council)

PLUMBER

Plumber

Effective Period: 7/1/2021 - 6/30/2022
Wage Rate per Hour: $71.25
Supplemental Benefit Rate per Hour: $39.95
Supplemental Note: Supplemental benefit contributions are to be made at the applicable overtime rates.

Plumber - Temporary Services

Temporary Services - When there are no Plumbers on the job site, there may be three shifts designed to cover the entire twenty-four hour period, including weekends if necessary, at the following rate straight time.

Effective Period: 7/1/2021 - 6/30/2022
Wage Rate per Hour: $57.08
Supplemental Benefit Rate per Hour: $31.88

Overtime
Double time the regular rate after an 8 hour day.
Double time the regular time rate for Saturday.
Double time the regular rate for Sunday.

Overtime Holidays
Double time the regular rate for work on the following holiday(s).
New Year's Day
President's Day
Memorial Day
Independence Day
Labor Day
Columbus Day
Veteran's Day
Thanksgiving Day
Day after Thanksgiving
Christmas Day

Shift Rates
30% shift premium shall be paid for wages and fringe benefits for 4:00 pm and midnight shifts Monday to Friday. 50% shift premium shall be paid for wages and fringe benefits for 4:00 pm and midnight shift work performed on weekends. For shift work on holidays, double time wages and fringe benefits shall be paid.

(Plumbers Local #1)

PLUMBER (MECHNICAL EQUIPMENT AND SERVICE)
(Mechanical Equipment and Service work shall include any repair and/or replacement of the present plumbing system.)

Plumber

Effective Period: 7/1/2021 - 6/30/2022
Wage Rate per Hour: $44.37
Supplemental Benefit Rate per Hour: $18.31

Overtime
Time and one half the regular rate after an 8 hour day.

Time and one half the regular rate for Saturday.
Time and one half the regular rate for Sunday.

Overtime Holidays

Time and one half the regular rate for work on the following holiday(s).
New Year's Day
President's Day
Memorial Day
Independence Day
Thanksgiving Day
Day after Thanksgiving
Christmas Day

Paid Holidays

None

(Plumbers Local # 1)

PLUMBER (RESIDENTIAL RATES FOR 1, 2 AND 3 FAMILY HOME CONSTRUCTION)

Effective Period: 7/1/2021 - 6/30/2022
Wage Rate per Hour: $49.47
Supplemental Benefit Rate per Hour: $28.68

Overtime

Double time the regular rate after an 8 hour day.
Double time the regular time rate for Saturday.
Double time the regular rate for Sunday.

Overtime Holidays

Double time the regular rate for work on the following holiday(s).
New Year's Day
President's Day
Memorial Day
Independence Day
Labor Day
Columbus Day
Veteran's Day
Thanksgiving Day
Day after Thanksgiving
Christmas Day

Paid Holidays

None

Shift Rates

30% shift premium shall be paid for wages and fringe benefits for 4:00 pm and midnight shifts Monday to Friday. 50% shift premium shall be paid for wages and fringe benefits for 4:00 pm and midnight shift work performed on weekends. For shift work on holidays, double time wages and fringe benefits shall be paid.

(Plumbers Local #1)

PLUMBER: PUMP & TANK

Oil Trades (Installation and Maintenance)

Plumber - Pump & Tank

Effective Period: 7/1/2021 - 6/30/2022
Wage Rate per Hour: $69.33
Supplemental Benefit Rate per Hour: $27.98

Overtime

Time and one half the regular rate after an 8 hour day.
Time and one half the regular rate for Saturday.
Time and one half the regular rate for Sunday.

Overtime Holidays

Time and one half the regular rate for work on the following holiday(s).
New Year's Day
President's Day
Memorial Day
Independence Day
Labor Day
Columbus Day
Veteran's Day
Thanksgiving Day
Day after Thanksgiving
Christmas Day

Paid Holidays

None

Shift Rates

All work outside the regular workday (8:00 A.M. to 3:30 P.M.) is to be paid at time and one half the regular hourly rate

(Plumbers Local #1)

POINTER, WATERPROOFER, CAULKER, SANDBLASTER, STEAMBLASTER
(Exterior Building Renovation)

Journeyperson

Effective Period: 7/1/2021 - 6/30/2022
Wage Rate per Hour: $56.77
Supplemental Benefit Rate per Hour: $29.91

Overtime
Time and one half the regular rate after an 8 hour day.
Time and one half the regular rate for Saturday.
Time and one half the regular rate for Sunday.
Saturday may be used as a make-up day at straight time when a day is lost during that week to inclement weather.

Overtime Holidays
Time and one half the regular rate for work on the following holiday(s).
New Year's Day
Martin Luther King Jr. Day
President's Day
Memorial Day
Independence Day
Labor Day
Thanksgiving Day
Christmas Day

Paid Holidays
None

Shift Rates
All work outside the regular work day (an eight hour workday between the hours of 6:00 A.M. and 4:00 P.M.) is to be paid at time and one half the regular rate. However, the employer may establish one (1) or two (2) shifts starting at or after 4:00 P.M. to be paid at the regular hourly rate plus a 10% differential.

(Bricklayer District Council)

ROOFER

Roofer

Effective Period: 7/1/2021 - 6/30/2022
Wage Rate per Hour: $44.25
Supplemental Benefit Rate per Hour: $34.81

Overtime
Time and one half the regular rate after an 8 hour day.
Time and one half the regular rate for Saturday.
Time and one half the regular rate for Sunday.

Overtime Holidays
Time and one half the regular rate for work on the following holiday(s).
New Year's Day
Memorial Day
Independence Day
Labor Day
Thanksgiving Day
Christmas Day

Paid Holidays
None

Shift Rates
Second shift - Regular hourly rate plus a 10% differential. Third shift - Regular hourly rate plus a 15% differential. There must be a first shift to work the second shift, and a second shift to work the third shift. All other work outside the regular work day (an eight hour workday between the hours of 5:00 A.M. and 4:00 P.M.) is to be paid at time and one half the regular rate.

(Local #8)

SHEET METAL WORKER

Sheet Metal Worker

Effective Period: 7/1/2021 - 6/30/2022
Wage Rate per Hour: $51.36
Supplemental Benefit Rate per Hour: $53.34
Supplemental Note: Supplemental benefit contributions are to be made at the applicable overtime rates.

Sheet Metal Worker - Fan Maintenance

(The temporary operation of fans or blowers in new or existing buildings for heating and/or ventilation, and/or air conditioning prior to the completion of the project.)

Effective Period: 7/1/2021 - 6/30/2022
Wage Rate per Hour: $41.09
Supplemental Benefit Rate per Hour: $53.34

Sheet Metal Worker - Duct Cleaner

Effective Period: 7/1/2021 - 6/30/2022
Wage Rate per Hour: $18.49
Supplemental Benefit Rate per Hour: $11.94

Overtime
Time and one half the regular rate after an 8 hour day.
Time and one half the regular rate for Saturday.
Double time the regular rate for Sunday.

Overtime Holidays
Double time the regular rate for work on the following holiday(s).
New Year's Day
Martin Luther King Jr. Day
President's Day
Memorial Day
Independence Day
Labor Day
Columbus Day
Veteran's Day
Thanksgiving Day
Day after Thanksgiving
Christmas Day

Paid Holidays
None

Shift Rates
Work that can only be performed outside regular working hours (eight hours of work between 7:30 A.M. and 3:30 P.M.) - First shift (work between 3:30 P.M. and 11:30 P.M.) - 10% differential above the established hourly rate. Second shift (work between 11:30 P.M. and 7:30 A.M.) - 15% differential above the established hourly rate.

For Fan Maintenance: On all full shifts of fan maintenance work the straight time hourly rate of pay will be paid for each shift, including nights, Saturdays, Sundays, and holidays.

(Local #28)

SHEET METAL WORKER - SPECIALTY
(Decking & Siding)

Sheet Metal Specialty Worker

The first worker to perform this work must be paid at the rate of the Sheet Metal Worker. The second and third workers shall be paid the Specialty Worker Rate. The ratio of One Sheet Metal Worker, then Two Specialty Workers shall be utilized thereafter.

Effective Period: 7/1/2021 - 6/30/2022
Wage Rate per Hour: $48.18
Supplemental Benefit Rate per Hour: $26.87
Supplemental Note: Supplemental benefit contributions are to be made at the applicable overtime rates.

Overtime
Time and one half the regular rate after an 8 hour day.
Time and one half the regular rate for Saturday.
Double time the regular rate for Sunday.

Overtime Holidays
Double time the regular rate for work on the following holiday(s).
New Year's Day
Martin Luther King Jr. Day
President's Day
Memorial Day
Independence Day
Labor Day
Columbus Day
Veteran's Day
Thanksgiving Day
Christmas Day

Paid Holidays
None

(Local #28)

SHIPYARD WORKER

Shipyard Mechanic - First Class

Effective Period: 7/1/2021 - 6/30/2022
Wage Rate per Hour: $28.50
Supplemental Benefit Rate per Hour: $3.95

Shipyard Mechanic - Second Class

Effective Period: 7/1/2021 - 6/30/2022
Wage Rate per Hour: $19.07
Supplemental Benefit Rate per Hour: $3.59

Shipyard Laborer - First Class

Effective Period: 7/1/2021 - 6/30/2022
Wage Rate per Hour: $23.40
Supplemental Benefit Rate per Hour: $3.75

Shipyard Laborer - Second Class

Effective Period: 7/1/2021 - 6/30/2022
Wage Rate per Hour: $17.38
Supplemental Benefit Rate per Hour: $3.52

Shipyard Dockhand - First Class

Effective Period: 7/1/2021 - 6/30/2022
Wage Rate per Hour: $21.57
Supplemental Benefit Rate per Hour: $3.68

Shipyard Dockhand - Second Class

Effective Period: 7/1/2021 - 6/30/2022
Wage Rate per Hour: $17.28
Supplemental Benefit Rate per Hour: $3.52

Overtime Description

Work performed on holiday is paid double time the regular hourly wage rate plus holiday pay.

Overtime

Time and one half the regular rate after an 8 hour day.
Time and one half the regular rate for Saturday.
Double time the regular rate for Sunday.
Time and one half the regular hourly rate after 40 straight time hours in any work week.

Paid Holidays

New Year's Day
Martin Luther King Jr. Day
President's Day
Good Friday
Memorial Day
Independence Day
Labor Day
Thanksgiving Day
Day after Thanksgiving
Christmas Day

Based on Survey Data

SIGN ERECTOR
(Sheet Metal, Plastic, Electric, and Neon)

Sign Erector

Effective Period: 7/1/2021 - 6/30/2022
Wage Rate per Hour: $52.29
Supplemental Benefit Rate per Hour: $57.49

Overtime
Time and one half the regular rate after a 7 hour day.
Time and one half the regular rate for Saturday.
Time and one half the regular rate for Sunday.
Time and one half the regular rate for work on the following holiday(s).

Paid Holidays
New Year's Day
President's Day
Memorial Day
Independence Day
Labor Day
Columbus Day
Election Day
Thanksgiving Day
Day after Thanksgiving
Christmas Day

Shift Rates
Time and one half the regular hourly rate is to be paid for all hours worked outside the regular workday either (7:00 A.M. through 2:30 P.M.) or (8:00 A.M. through 3:30 P.M.)

(Local #137)

STEAMFITTER

Steamfitter

Effective Period: 7/1/2021 - 6/30/2022
Wage Rate per Hour: $59.05
Supplemental Benefit Rate per Hour: $58.14
Supplemental Note: Overtime supplemental benefit rate: $115.54

Steamfitter -Temporary Services

Effective Period: 7/1/2021 - 6/30/2022
Wage Rate per Hour: $44.88
Supplemental Benefit Rate per Hour: $47.31

Overtime Description
Double time after a 7 hour day except for Temporary Services.

Overtime
Double time the regular time rate for Saturday.
Double time the regular rate for Sunday.

Overtime Holidays
Double time the regular rate for work on the following holiday(s).
New Year's Day
President's Day
Memorial Day
Independence Day
Labor Day
Columbus Day
Veteran's Day
Thanksgiving Day
Day after Thanksgiving
Christmas Day

Paid Holidays
None

Shift Rates
May be performed outside of the regular workday except Saturday, Sunday and Holidays. When shift work is performed the wage rate for regular time worked is a 15% percent premium on wage and 15% percent premium on supplemental benefits.

Local 638

STEAMFITTER - REFRIGERATION AND AIR CONDITIONER
(Maintenance and Installation Service Person)

Refrigeration and Air Conditioner Mechanic

Effective Period: 7/1/2021 - 6/30/2022
Wage Rate per Hour: $42.85
Supplemental Benefit Rate per Hour: $19.46

Overtime

Time and one half the regular rate after an 8 hour day.
Time and one half the regular rate for Saturday.
Double time the regular rate for Sunday.

Overtime Holidays

Double time the regular rate for work on the following holiday(s).
New Year's Day
Independence Day
Labor Day
Veteran's Day
Thanksgiving Day
Christmas Day

Double time and one half the regular rate for work on the following holiday(s).
Martin Luther King Jr. Day
President's Day
Memorial Day
Columbus Day

Paid Holidays

New Year's Day
Martin Luther King Jr. Day
President's Day
Memorial Day
Independence Day
Labor Day
Columbus Day
Veteran's Day
Thanksgiving Day
Christmas Day

(Local #638-B)

STONE MASON - SETTER

Stone Mason - Setter

(Assisted by Derrickperson and Rigger)

Effective Period: 7/1/2021 - 6/30/2022
Wage Rate per Hour: $56.43
Supplemental Benefit Rate per Hour: $48.52

Overtime

Time and one half the regular rate after a 7 hour day.
Time and one half the regular rate for Saturday.

Double time the regular rate for Sunday.

Overtime Holidays

Double time the regular rate for work on the following holiday(s).
New Year's Day
Washington's Birthday
Good Friday
Memorial Day
Independence Day
Labor Day
Thanksgiving Day
Christmas Day

Paid Holidays

1/2 day on Christmas Eve if work is performed in the A.M.

Shift Rates

For all work outside the regular workday (8:00 A.M. to 3:30 P.M. Monday through Friday), the pay shall be straight time plus a ten percent (10%) differential.

(Bricklayers District Council)

TAPER

Drywall Taper

Effective Period: 7/1/2021 - 6/30/2022
Wage Rate per Hour: $48.47
Supplemental Benefit Rate per Hour: $29.06

Overtime

Time and one half the regular rate after a 7 hour day.
Time and one half the regular rate for Saturday.
Time and one half the regular rate for Sunday.

Overtime Holidays

Time and one half the regular rate for work on the following holiday(s).
New Year's Day
Martin Luther King Jr. Day
President's Day
Good Friday
Memorial Day
Independence Day
Labor Day
Columbus Day
Thanksgiving Day
Christmas Day

Paid Holidays

Any worker who reports to work on Christmas Eve or New Year's Eve pursuant to his employer's instruction shall be entitled to three (3) hours afternoon pay without working.

(Local #1974)

TELECOMMUNICATION WORKER

(Install/maintain/repair telecommunications cables carrying data, video, and/or voice except for installation on building construction/alteration/renovation projects.)

Telecommunication Worker

Effective Period: 7/1/2021 - 6/30/2022
Wage Rate per Hour: $47.03
Supplemental Benefit Rate per Hour: $23.15
Supplemental Note: The above rate applies for Manhattan, Bronx, Brooklyn, Queens. $22.84 for Staten Island only.

Overtime

Time and one half the regular rate after an 8 hour day.
Time and one half the regular rate for Saturday.
Time and one half the regular rate for Sunday.

Overtime Holidays

Time and one half the regular rate for work on the following holiday(s).
New Year's Day
Lincoln's Birthday
Washington's Birthday
Memorial Day
Independence Day
Labor Day
Columbus Day
Election Day
Veteran's Day
Thanksgiving Day
Christmas Day

Paid Holidays

New Year's Day
Lincoln's Birthday
Washington's Birthday
Memorial Day
Independence Day

Labor Day
Columbus Day
Election Day
Veteran's Day
Thanksgiving Day
Christmas Day
Employees have the option of observing either Martin Luther King's Birthday or the day after Thanksgiving instead of Lincoln's Birthday

Shift Rates

For any workday that starts before 8A.M. or ends after 6P.M. there is a 10% differential for the applicable worker's hourly rate.

Vacation

After 6 months.....one week.
After 12 months but less than 7 years.....two weeks.
After 7 or more but less than 15 years.....three weeks.
After 15 years or more but less than 25 years.....four weeks.

(C.W.A.)

TILE FINISHER

Tile Finisher

Effective Period: 7/1/2021 - 6/30/2022
Wage Rate per Hour: $43.71
Supplemental Benefit Rate per Hour: $35.10

Overtime

Time and one half the regular rate after a 7 hour day.
Time and one half the regular rate for Saturday.
Double time the regular rate for Sunday.

Overtime Holidays

Double time the regular rate for work on the following holiday(s).
New Year's Day
President's Day
Good Friday
Memorial Day
Independence Day
Labor Day
Columbus Day
Veteran's Day
Thanksgiving Day
Day after Thanksgiving
Christmas Day

Paid Holidays
None

Shift Rates
Off shift work day (work performed outside the regular 8:00 A.M. to 3:30 P.M. workday): shift differential of one and one quarter (1¼) times the regular straight time rate of pay for the seven hours of actual off-shift work.

(Local #7)

TILE LAYER - SETTER

Tile Layer - Setter

Effective Period: 7/1/2021 - 6/30/2022
Wage Rate per Hour: $56.42
Supplemental Benefit Rate per Hour: $39.75

Overtime
Time and one half the regular rate after a 7 hour day.
Time and one half the regular rate for Saturday.
Double time the regular rate for Sunday.

Overtime Holidays
Double time the regular rate for work on the following holiday(s).
New Year's Day
President's Day
Good Friday
Memorial Day
Independence Day
Labor Day
Columbus Day
Veteran's Day
Thanksgiving Day
Day after Thanksgiving
Christmas Day

Shift Rates
Off shift work day (work performed outside the regular 8:00 A.M. to 3:30 P.M. workday): shift differential of one and one quarter (1¼) times the regular straight time rate of pay for the seven hours of actual off-shift work.

(Local #7)

TIMBERPERSON

Timberperson

Effective Period: 7/1/2021 - 6/30/2022
Wage Rate per Hour: $52.50
Supplemental Benefit Rate per Hour: $52.94

Overtime
Time and one half the regular rate after an 8 hour day.
Time and one half the regular rate for Saturday.
Double time the regular rate for Sunday.
Saturday may be used as a make-up day at straight time when a day is lost during that week to inclement weather.

Overtime Holidays
Double time the regular rate for work on the following holiday(s).
New Year's Day
President's Day
Memorial Day
Independence Day
Labor Day
Columbus Day
Presidential Election Day
Thanksgiving Day
Christmas Day

Paid Holidays
None

Shift Rates
Off shift work commencing between 5:00 P.M. and 11:00 P.M. shall work eight and one half hours allowing for one half hour for lunch. The wage rate shall be 113% of the straight time hourly wage rate. Benefits for off-shift work shall be paid at the straight time rate.

(Local #1536)

TUNNEL WORKER

Blasters, Mucking Machine Operators (Compressed Air Rates)

Effective Period: 7/1/2021 - 6/30/2022
Wage Rate per Hour: $68.58
Supplemental Benefit Rate per Hour: $60.19

Tunnel Workers (Compressed Air Rates)

Includes shield driven liner plate portions or solidification portions work (8 hour shift) during excavation phase.

Effective Period: 7/1/2021 - 6/30/2022
Wage Rate per Hour: $66.14
Supplemental Benefit Rate per Hour: $58.29

Top Nipper (Compressed Air Rates)

Effective Period: 7/1/2021 - 6/30/2022
Wage Rate per Hour: $65.04
Supplemental Benefit Rate per Hour: $57.14

Outside Lock Tender, Outside Gauge Tender,Muck Lock Tender (Compressed Air Rates)

Effective Period: 7/1/2021 - 6/30/2022
Wage Rate per Hour: $63.74
Supplemental Benefit Rate per Hour: $56.20

Bottom Bell & Top Bell Signal Person: Shaft Person (Compressed Air Rates)

Effective Period: 7/1/2021 - 6/30/2022
Wage Rate per Hour: $63.74
Supplemental Benefit Rate per Hour: $56.20

Changehouse Attendant: Powder Watchperson (Compressed Air Rates)

Effective Period: 7/1/2021 - 6/30/2022
Wage Rate per Hour: $56.04
Supplemental Benefit Rate per Hour: $52.83

Blasters (Free Air Rates)

Effective Period: 7/1/2021 - 6/30/2022
Wage Rate per Hour: $65.41
Supplemental Benefit Rate per Hour: $57.80

Tunnel Workers (Free Air Rates)

Effective Period: 7/1/2021 - 6/30/2022
Wage Rate per Hour: $62.58
Supplemental Benefit Rate per Hour: $55.38

All Others (Free Air Rates)

Effective Period: 7/1/2021 - 6/30/2022

Wage Rate per Hour: $57.84
Supplemental Benefit Rate per Hour: $51.26

Microtunneling (Free Air Rates)

Effective Period: 7/1/2021 - 6/30/2022
Wage Rate per Hour: $50.06
Supplemental Benefit Rate per Hour: $44.30

Overtime Description

For work performed during excavation and primary concrete tunnel lining phases - Double time the regular rate after an 8 hour day and Saturday, Sunday and on the following holiday(s) listed below.
For Repair-Maintenance Work on Existing Equipment and Facilities - Time and one half the regular rate after a 7 hour day, Saturday, Sunday and double time the regular rate for work on the following holiday(s) listed below.
For Small-Bore Micro Tunneling Machines - Time and one-half the regular rate shall be paid for all overtime.
For work not listed above - Time and one half the regular rate after an 8 hour day and Saturday and double time the regular rate on Sunday and on the following holiday(s) listed below.

Paid Holidays

New Year's Day
Lincoln's Birthday
President's Day
Memorial Day
Independence Day
Labor Day
Columbus Day
Election Day
Veteran's Day
Thanksgiving Day
Christmas Day

(Local #147)

UTILITY LOCATOR
(Locate & mark underground utilities for street excavation.)

Utility Locator (Year 7 and above)

Effective Period: 7/1/2021 - 6/30/2022
Wage Rate per Hour: $31.56
Supplemental Benefit Rate per Hour: $1.43

Utility Locator (Year 5 - 6)

Effective Period: 7/1/2021 - 6/30/2022

Wage Rate per Hour: $22.85
Supplemental Benefit Rate per Hour: $1.43

Utility Locator (Year 4)

Effective Period: 7/1/2021 - 6/30/2022
Wage Rate per Hour: $21.54
Supplemental Benefit Rate per Hour: $1.43

Utility Locator (Year 3)

Effective Period: 7/1/2021 - 6/30/2022
Wage Rate per Hour: $20.30
Supplemental Benefit Rate per Hour: $1.43

Utility Locator (Year 2)

Effective Period: 7/1/2021 - 6/30/2022
Wage Rate per Hour: $19.13
Supplemental Benefit Rate per Hour: $1.43

Utility Locator (Year 1)

Effective Period: 7/1/2021 - 6/30/2022
Wage Rate per Hour: $18.04
Supplemental Benefit Rate per Hour: $1.43

Utility Locator (Up to 1 year)

Effective Period: 7/1/2021 - 6/30/2022
Wage Rate per Hour: $17.00
Supplemental Benefit Rate per Hour: $1.43
Supplemental Note: No benefits for the first 90 days of employment.

Overtime

Time and one half the regular rate for work on the following holiday(s).
Time and one half the regular hourly rate after 40 straight time hours in any work week.

Paid Holidays

New Year's Day
Memorial Day
Independence Day
Thanksgiving Day
Christmas Day

Shift Rates

10% shift differential to employees working any shift starting between noon and 5 AM.

Vacation

For up to 1 year 0 hours
For year 1 - 2 48 hours per year
For year 3 - 9 96 hours per year
For year 10 or more 144 hours per year

Sick Days:
For up to 1 year employee receives 40 hours paid sick leave.
For year 1 employee earns 2 hours of paid sick leave for every 100 overtime hours worked.
For year 2 - 9 years employee earns 4 hours of paid sick leave for every 100 overtime hours worked.
For year 10 or more employee earns 6 hours of paid sick leave for every 100 overtime hours worked.

(C.W.A.)

WELDER

TO BE PAID AT THE RATE OF THE JOURNEYPERSON IN THE TRADE PERFORMING THE WORK.

OFFICE OF THE COMPTROLLER

CITY OF NEW YORK

CONSTRUCTION APPRENTICE PREVAILING WAGE SCHEDULE

Pursuant to Labor Law § 220 (3-e), only apprentices who are individually registered in a bona fide program to which the employer contractor is a participant and registered with the New York State Department of Labor, may be paid at the apprentice rates in this schedule. Apprentices who are not so registered must be paid as journey persons in accordance with the trade classification of the work they actually performed.

Apprentice ratios are established to ensure the proper safety, training and supervision of apprentices. A ratio establishes the number of journey workers required for each apprentice in a program and on a job site. Ratios are interpreted as follows: in the case of a 1:1, 1:4 ratio, there must be one journey worker for the first apprentice, and four additional journey workers for each subsequent apprentice.

TABLE OF CONTENTS

CLASSIFICATION	PAGE
BOILERMAKER	3
BRICKLAYER	4
CARPENTER	5
CARPENTER - HIGH RISE CONCRETE FORMS	5
CEMENT MASON	6
CEMENT AND CONCRETE WORKER	7
DERRICKPERSON & RIGGER (STONE)	7
DOCKBUILDER/PILE DRIVER	8
ELECTRICIAN	9
ELEVATOR CONSTRUCTOR	10
ELEVATOR REPAIR & MAINTENANCE	11
ENGINEER	12
ENGINEER - OPERATING	13
FLOOR COVERER	14
GLAZIER	14
HAZARDOUS MATERIAL HANDLER	15
HEAT & FROST INSULATOR	16
HOUSE WRECKER	16
IRON WORKER - ORNAMENTAL	17
IRON WORKER - STRUCTURAL	18
LABORER (FOUNDATION, CONCRETE, EXCAVATING, STREET PIPE LAYER & COMMON)	18
MARBLE MECHANICS	19
MASON TENDER	21
METALLIC LATHER	21
MILLWRIGHT	22
PAINTER	23
PAINTER - METAL POLISHER	24
PAINTER - STRUCTURAL STEEL	24
PAVER AND ROADBUILDER	25
PLASTERER	25
PLASTERER - TENDER	26
PLUMBER	27
POINTER, WATERPROOFER, CAULKER, SANDBLASTER, STEAMBLASTER	28
ROOFER	29
SHEET METAL WORKER	29
SIGN ERECTOR	30
STEAMFITTER	32
STEAMFITTER - REFRIGERATION & AIR CONDITIONER	33
STONE MASON - SETTER	33
TAPER	34
TILE LAYER - SETTER	35
TIMBERPERSON	36

BOILERMAKER
(Ratio of Apprentice to Journeyperson: 1 to 1, 1 to 3)

Boilermaker (First Year)

Effective Period: 7/1/2021 - 6/30/2022
Wage Rate Per Hour: 65% of Journeyperson's rate
Supplemental Benefit Rate Per Hour: $33.12

Boilermaker (Second Year: 1st Six Months)

Effective Period: 7/1/2021 - 6/30/2022
Wage Rate Per Hour: 70% of Journeyperson's rate
Supplemental Benefit Rate Per Hour: $35.05

Boilermaker (Second Year: 2nd Six Months)

Effective Period: 7/1/2021 - 6/30/2022
Wage Rate Per Hour: 75% of Journeyperson's rate
Supplemental Benefit Rate Per Hour: $37.01

Boilermaker (Third Year: 1st Six Months)

Effective Period: 7/1/2021 - 6/30/2022
Wage Rate Per Hour: 80% of Journeyperson's rate
Supplemental Benefit Rate Per Hour: $38.92

Boilermaker (Third Year: 2nd Six Months)

Effective Period: 7/1/2021 - 6/30/2022
Wage Rate Per Hour: 85% of Journeyperson's rate
Supplemental Benefit Rate Per Hour: $40.87

Boilermaker (Fourth Year: 1st Six Months)

Effective Period: 7/1/2021 - 6/30/2022
Wage Rate Per Hour: 90% of Journeyperson's rate
Supplemental Benefit Rate Per Hour: $42.82

Boilermaker (Fourth Year: 2nd Six Months)

Effective Period: 7/1/2021 - 6/30/2022
Wage Rate Per Hour: 95% of Journeyperson's rate
Supplemental Benefit Rate Per Hour: $44.74

(Local #5)

BRICKLAYER
(Ratio of Apprentice to Journeyperson: 1 to 1, 1 to 4)

Bricklayer (First 750 Hours)

Effective Period: 7/1/2021 - 6/30/2022
Wage Rate Per Hour: 50% of Journeyperson's rate
Supplemental Benefit Rate Per Hour: $22.95

Bricklayer (Second 750 Hours)

Effective Period: 7/1/2021 - 6/30/2022
Wage Rate Per Hour: 60% of Journeyperson's rate
Supplemental Benefit Rate Per Hour: $22.95

Bricklayer (Third 750 Hours)

Effective Period: 7/1/2021 - 6/30/2022
Wage Rate Per Hour: 70% of Journeyperson's rate
Supplemental Benefit Rate Per Hour: $22.95

Bricklayer (Fourth 750 Hours)

Effective Period: 7/1/2021 - 6/30/2022
Wage Rate Per Hour: 80% of Journeyperson's rate
Supplemental Benefit Rate Per Hour: $22.95

Bricklayer (Fifth 750 Hours)

Effective Period: 7/1/2021 - 6/30/2022
Wage Rate Per Hour: 90% of Journeyperson's rate
Supplemental Benefit Rate Per Hour: $22.95

Bricklayer (Sixth 750 Hours)

Effective Period: 7/1/2021 - 6/30/2022
Wage Rate Per Hour: 95% of Journeyperson's rate
Supplemental Benefit Rate Per Hour: $22.95

(Bricklayer District Council)

CARPENTER
(Ratio of Apprentice to Journeyperson: 1 to 1, 1 to 4)

Carpenter (First Year)

Effective Period: 7/1/2021 - 6/30/2022
Wage Rate Per Hour For Building Apprentice: $19.55
Supplemental Benefit Rate Per Hour For Building Apprentice: $16.35

Wage Rate Per Hour For Heavy Apprentice: $23.37
Supplemental Benefit Rate Per Hour For Heavy Apprentice: $35.49

Carpenter (Second Year)

Effective Period: 7/1/2021 - 6/30/2022
Wage Rate Per Hour For Building Apprentice: $22.55
Supplemental Benefit Rate Per Hour For Building Apprentice: $17.85

Wage Rate Per Hour For Heavy Apprentice: $28.97
Supplemental Benefit Rate Per Hour For Heavy Apprentice: $35.49

Carpenter (Third Year)

Effective Period: 7/1/2021 - 6/30/2022
Wage Rate Per Hour For Building Apprentice: $26.80
Supplemental Benefit Rate Per Hour For Building Apprentice: $21.45

Wage Rate Per Hour For Heavy Apprentice: $37.35
Supplemental Benefit Rate Per Hour For Heavy Apprentice: $35.49

Carpenter (Fourth Year)

Effective Period: 7/1/2021 - 6/30/2022
Wage Rate Per Hour For Building Apprentice: $34.68
Supplemental Benefit Rate Per Hour For Building Apprentice: $23.45

Wage Rate Per Hour For Heavy Apprentice: $45.74
Supplemental Benefit Rate Per Hour For Heavy Apprentice: $35.49

(Carpenters District Council)

CARPENTER - HIGH RISE CONCRETE FORMS
(Ratio of Apprentice to Journeyperson: 1 to 1, 2 to 5)

Carpenter - High Rise (First Year)

Effective Period: 7/1/2021 - 6/30/2022
Wage Rate per Hour: $18.27
Supplemental Benefit Rate per Hour: $16.55

Carpenter - High Rise (Second Year)

Effective Period: 7/1/2021 - 6/30/2022
Wage Rate per Hour: $24.70
Supplemental Benefit Rate per Hour: $16.73

Carpenter - High Rise (Third Year)

Effective Period: 7/1/2021 - 6/30/2022
Wage Rate per Hour: $31.28
Supplemental Benefit Rate per Hour: $16.95

Carpenter - High Rise (Fourth Year)

Effective Period: 7/1/2021 - 6/30/2022
Wage Rate per Hour: $38.90
Supplemental Benefit Rate per Hour: $17.20

(Carpenters District Council)

CEMENT MASON
(Ratio of Apprentice to Journeyperson: 1 to 1, 1 to 4)

Cement Mason (First Year)

Effective Period: 7/1/2021 - 6/30/2022
Wage Rate per Hour: $19.57
Supplemental Benefit Rate per Hour: $15.61

Cement Mason (Second Year)

Effective Period: 7/1/2021 - 6/30/2022
Wage Rate per Hour: $24.40
Supplemental Benefit Rate per Hour: $15.91

Cement Mason (Third Year)

Effective Period: 7/1/2021 - 6/30/2022
Wage Rate per Hour: $29.68
Supplemental Benefit Rate per Hour: $16.02

(Local #780)

CEMENT AND CONCRETE WORKER
(Ratio of Apprentice to Journeyperson: 1 to 1, 1 to 3)

Cement & Concrete Worker (First 1333 hours)

Effective Period: 7/1/2021 - 6/30/2022
Wage Rate Per Hour: 53% of Journeyperson's rate
Supplemental Benefit Rate Per Hour: $14.79

Cement & Concrete Worker (Second 1333 hours)

Effective Period: 7/1/2021 - 6/30/2022
Wage Rate Per Hour: 69% of Journeyperson's rate
Supplemental Benefit Rate Per Hour: $19.72

Cement & Concrete Worker (Last 1334 hours)

Effective Period: 7/1/2021 - 6/30/2022
Wage Rate Per Hour: 85% of Journeyperson's rate
Supplemental Benefit Rate Per Hour: $21.30

(Cement Concrete Workers District Council)

DERRICKPERSON & RIGGER (STONE)
(Ratio of Apprentice to Journeyperson: 1 to 1, 1 to 4)

Derrickperson & Rigger (stone) - First Year

Effective Period: 7/1/2021 - 6/30/2022
Wage Rate Per Hour: 50% of Journeyperson's rate
Supplemental Benefit Rate Per Hour: 50% of Journeyperson's rate

Derrickperson & Rigger (stone) - Second Year: 1st Six Months

Effective Period: 7/1/2021 - 6/30/2022
Wage Rate Per Hour: 70% of Journeyperson's rate
Supplemental Benefit Rate Per Hour: 75% of Journeyperson's rate

Derrickperson & Rigger (stone) - Second Year: 2nd Six Months

Effective Period: 7/1/2021 - 6/30/2022
Wage Rate Per Hour: 80% of Journeyperson's rate
Supplemental Benefit Rate Per Hour: 75% of Journeyperson's rate

Derrickperson & Rigger (stone) - Third Year

Effective Period: 7/1/2021 - 6/30/2022
Wage Rate Per Hour: 90% of Journeyperson's rate
Supplemental Benefit Rate Per Hour: 75% of Journeyperson's rate

(Local #197)

DOCKBUILDER/PILE DRIVER
(Ratio of Apprentice to Journeyperson: 1 to 1, 1 to 6)

Dockbuilder/Pile Driver (First Year)

Effective Period: 7/1/2021 - 6/30/2022
Wage Rate Per Hour: $23.37
Supplemental Benefit Rate Per Hour: $35.49

Dockbuilder/Pile Driver (Second Year)

Effective Period: 7/1/2021 - 6/30/2022
Wage Rate Per Hour: $28.97
Supplemental Benefit Rate Per Hour: $35.49

Dockbuilder/Pile Driver (Third Year)

Effective Period: 7/1/2021 - 6/30/2022
Wage Rate Per Hour: $37.35
Supplemental Benefit Rate Per Hour: $35.49

Dockbuilder/Pile Driver (Fourth Year)

Effective Period: 7/1/2021 - 6/30/2022
Wage Rate Per Hour: $45.74

Supplemental Benefit Rate Per Hour: $35.49

(Carpenters District Council)

ELECTRICIAN
(Ratio of Apprentice to Journeyperson: 1 to 1, 1 to 3)

Electrician (First Term: 0-6 Months)

Effective Period: 7/1/2021 - 6/30/2022
Wage Rate per Hour: $17.25
Supplemental Benefit Rate per Hour: $14.93
Overtime Supplemental Rate Per Hour: $16.07

Electrician (First Term: 7-12 Months)

Effective Period: 7/1/2021 - 6/30/2022
Wage Rate per Hour: $17.75
Supplemental Benefit Rate per Hour: $15.19
Overtime Supplemental Rate Per Hour: $16.36

Electrician (Second Term: 0-6 Months)

Effective Period: 7/1/2021 - 6/30/2022
Wage Rate per Hour: $18.75
Supplemental Benefit Rate per Hour: $15.70
Overtime Supplemental Rate Per Hour: $16.95

Electrician (Second Term: 7-12 Months)

Effective Period: 7/1/2021 - 6/30/2022
Wage Rate per Hour: $19.75
Supplemental Benefit Rate per Hour: $16.22
Overtime Supplemental Rate Per Hour: $17.53

Electrician (Third Term: 0-6 Months)

Effective Period: 7/1/2021 - 6/30/2022
Wage Rate per Hour: $20.75
Supplemental Benefit Rate per Hour: $16.74
Overtime Supplemental Rate Per Hour: $18.11

Electrician (Third Term: 7-12 Months)

Effective Period: 7/1/2021 - 6/30/2022
Wage Rate per Hour: $21.75
Supplemental Benefit Rate per Hour: $17.26
Overtime Supplemental Rate Per Hour: $18.70

Electrician (Fourth Term: 0-6 Months)

Effective Period: 7/1/2021 - 6/30/2022
Wage Rate per Hour: $22.75
Supplemental Benefit Rate per Hour: $17.77
Overtime Supplemental Rate Per Hour: $19.28

Electrician (Fourth Term: 7-12 Months)

Effective Period: 7/1/2021 - 6/30/2022
Wage Rate per Hour: $24.75
Supplemental Benefit Rate per Hour: $18.81
Overtime Supplemental Rate Per Hour: $20.45

Electrician (Fifth Term: 0-12 Months)

Effective Period: 7/1/2021 - 6/30/2022
Wage Rate per Hour: $26.00
Supplemental Benefit Rate per Hour: $22.06
Overtime Supplemental Rate Per Hour: $23.70

Electrician (Fifth Term: 13-18 Months)

Effective Period: 7/1/2021 - 6/30/2022
Wage Rate per Hour: $30.50
Supplemental Benefit Rate per Hour: $24.45
Overtime Supplemental Rate Per Hour: $26.38

Overtime Description
Overtime Wage paid at time and one half the regular rate

(Local #3)

ELEVATOR CONSTRUCTOR
(Ratio of Apprentice to Journeyperson: 1 to 1, 1 to 2)

Elevator (Constructor) - First Year

Effective Period: 7/1/2021 - 3/16/2022
Wage Rate Per Hour: 50% of Journeyperson's rate
Supplemental Rate Per Hour: $32.76

Effective Period: 3/17/2022 - 6/30/2022
Wage Rate Per Hour: 50% of Journeyperson's rate
Supplemental Rate Per Hour: $33.38

Elevator (Constructor) - Second Year

Effective Period: 7/1/2021 - 3/16/2022
Wage Rate Per Hour: 55% of Journeyperson's rate
Supplemental Rate Per Hour: $33.31

Effective Period: 3/17/2022 - 6/30/2022
Wage Rate Per Hour: 55% of Journeyperson's rate
Supplemental Rate Per Hour: $33.96

Elevator (Constructor) - Third Year

Effective Period: 7/1/2021 - 3/16/2022
Wage Rate Per Hour: 65% of Journeyperson's rate
Supplemental Rate Per Hour: $34.42

Effective Period: 3/17/2022 - 6/30/2022
Wage Rate Per Hour: 65% of Journeyperson's rate
Supplemental Rate Per Hour: $35.10

Elevator (Constructor) - Fourth Year

Effective Period: 7/1/2021 - 3/16/2022
Wage Rate Per Hour: 75% of Journeyperson's rate
Supplemental Rate Per Hour: $35.52

Effective Period: 3/17/2022 - 6/30/2022
Wage Rate Per Hour: 75% of Journeyperson's rate
Supplemental Rate Per Hour: $36.24

(Local #1)

ELEVATOR REPAIR & MAINTENANCE
(Ratio of Apprentice to Journeyperson: 1 to 1, 1 to 2)

Elevator Service/Modernization Mechanic (First Year)

Effective Period: 7/1/2021 - 3/16/2022
Wage Rate Per Hour: 50% of Journeyperson's rate
Supplemental Benefit Per Hour: $32.71

Effective Period: 3/17/2022 - 6/30/2022
Wage Rate Per Hour: 50% of Journeyperson's rate
Supplemental Benefit Per Hour: $33.33

Elevator Service/Modernization Mechanic (Second Year)

Effective Period: 7/1/2021 - 3/16/2022
Wage Rate Per Hour: 55% of Journeyperson's rate
Supplemental Benefit Per Hour: $33.26

Effective Period: 3/17/2022 - 6/30/2022
Wage Rate Per Hour: 55% of Journeyperson's rate
Supplemental Benefit Per Hour: $33.90

Elevator Service/Modernization Mechanic (Third Year)

Effective Period: 7/1/2021 - 3/16/2022
Wage Rate Per Hour: 65% of Journeyperson's rate
Supplemental Benefit Per Hour: $34.35

Effective Period: 3/17/2022 - 6/30/2022
Wage Rate Per Hour: 65% of Journeyperson's rate
Supplemental Benefit Per Hour: $35.03

Elevator Service/Modernization Mechanic (Fourth Year)

Effective Period: 7/1/2021 - 3/16/2022
Wage Rate Per Hour: 75% of Journeyperson's rate
Supplemental Benefit Per Hour: $35.45

Effective Period: 3/17/2022 - 6/30/2022
Wage Rate Per Hour: 75% of Journeyperson's rate
Supplemental Benefit Per Hour: $36.17

(Local #1)

ENGINEER
(Ratio of Apprentice to Journeyperson: 1 to 1, 1 to 5)

Engineer - First Year

Effective Period: 7/1/2021 - 6/30/2022

Wage Rate per Hour: $25.38
Supplemental Benefit Rate per Hour: $28.51

Engineer - Second Year

Effective Period: 7/1/2021 - 6/30/2022
Wage Rate per Hour: $31.72
Supplemental Benefit Rate per Hour: $28.51

Engineer - Third Year

Effective Period: 7/1/2021 - 6/30/2022
Wage Rate per Hour: $34.89
Supplemental Benefit Rate per Hour: $28.51

Engineer - Fourth Year

Effective Period: 7/1/2021 - 6/30/2022
Wage Rate per Hour: $38.06
Supplemental Benefit Rate per Hour: $28.51

(Local #15)

ENGINEER - OPERATING
(Ratio of Apprentice to Journeyperson: 1 to 1, 1 to 5)

Operating Engineer - First Year

Effective Period: 7/1/2021 - 6/30/2022
Wage Rate Per Hour: 40% of Operating Engineer - Road & Heavy Construction V's Rate
Supplemental Benefit Per Hour: $24.05

Operating Engineer - Second Year

Effective Period: 7/1/2021 - 6/30/2022
Wage Rate Per Hour: 50% of Operating Engineer - Road & Heavy Construction V's Rate
Supplemental Benefit Per Hour: $24.05

Operating Engineer - Third Year

Effective Period: 7/1/2021 - 6/30/2022
Wage Rate Per Hour: 60% of Operating Engineer - Road & Heavy Construction V's Rate
Supplemental Benefit Per Hour: $24.05

(Local #14)

FLOOR COVERER
(Ratio of Apprentice to Journeyperson: 1 to 1, 1 to 4)

Floor Coverer (First Year)

Effective Period: 7/1/2021 - 6/30/2022
Wage Rate per Hour: $24.55
Supplemental Benefit Rate per Hour: $16.35

Floor Coverer (Second Year)

Effective Period: 7/1/2021 - 6/30/2022
Wage Rate per Hour: $27.55
Supplemental Benefit Rate per Hour: $17.85

Floor Coverer (Third Year)

Effective Period: 7/1/2021 - 6/30/2022
Wage Rate per Hour: $31.80
Supplemental Benefit Rate per Hour: $21.45

Floor Coverer (Fourth Year)

Effective Period: 7/1/2021 - 6/30/2022
Wage Rate per Hour: $39.68
Supplemental Benefit Rate per Hour: $23.45

(Carpenters District Council)

GLAZIER
(Ratio of Apprentice to Journeyperson: 1 to 1, 1 to 3)

Glazier (First Year)

Effective Period: 7/1/2021 - 6/30/2022

Wage and Supplemental Rate Per Hour: 40% of Journeyperson's rate

Glazier (Second Year)

Effective Period: 7/1/2021 - 6/30/2022
Wage and Supplemental Rate Per Hour: 50% of Journeyperson's rate

Glazier (Third Year)

Effective Period: 7/1/2021 - 6/30/2022
Wage and Supplemental Rate Per Hour: 60% of Journeyperson's rate

Glazier (Fourth Year)

Effective Period: 7/1/2021 - 6/30/2022
Wage and Supplemental Rate Per Hour: 80% of Journeyperson's rate

(Local #1281)

HAZARDOUS MATERIAL HANDLER
(Ratio of Apprentice Journeyperson: 1 to 1, 1 to 3)

Handler (First 1000 Hours)

Effective Period: 7/1/2021 - 6/30/2022
Wage Rate Per Hour: 78% of Journeyperson's rate
Supplemental Benefit Rate Per Hour: $14.25

Handler (Second 1000 Hours)

Effective Period: 7/1/2021 - 6/30/2022
Wage Rate Per Hour: 80% of Journeyperson's rate
Supplemental Benefit Rate Per Hour: $14.25

Handler (Third 1000 Hours)

Effective Period: 7/1/2021 - 6/30/2022
Wage Rate Per Hour: 83% of Journeyperson's rate
Supplemental Benefit Rate Per Hour: $14.25

Handler (Fourth 1000 Hours)

Effective Period: 7/1/2021 - 6/30/2022
Wage Rate Per Hour: 89% of Journeyperson's rate
Supplemental Benefit Rate Per Hour: $14.25

(Local #78)

HEAT & FROST INSULATOR
(Ratio of Apprentice to Journeyperson: 1 to 1, 1 to 3)

Heat & Frost Insulator (First Year)

Effective Period: 7/1/2021 - 6/30/2022
Wage and Supplemental Rate Per Hour: 40% of Journeyperson's rate

Heat & Frost Insulator (Second Year)

Effective Period: 7/1/2021 - 6/30/2022
Wage and Supplemental Rate Per Hour: 50% of Journeyperson's rate

Heat & Frost Insulator (Third Year)

Effective Period: 7/1/2021 - 6/30/2022
Wage and Supplemental Rate Per Hour: 60% of Journeyperson's rate

Heat & Frost Insulator (Fourth Year)

Effective Period: 7/1/2021 - 6/30/2022
Wage and Supplemental Rate Per Hour: 70% of Journeyperson's rate

(Local #12)

HOUSE WRECKER
(TOTAL DEMOLITION)
(Ratio of Apprentice to Journeyperson: 1 to 1, 1 to 3)

House Wrecker - First Year

Effective Period: 7/1/2021 - 6/30/2022
Wage Rate per Hour: $20.20
Supplemental Benefit Rate per Hour: $10.07

House Wrecker - Second Year

Effective Period: 7/1/2021 - 6/30/2022
Wage Rate per Hour: $22.15
Supplemental Benefit Rate per Hour: $10.07

House Wrecker - Third Year

Effective Period: 7/1/2021 - 6/30/2022
Wage Rate per Hour: $23.65
Supplemental Benefit Rate per Hour: $10.07

House Wrecker - Fourth Year

Effective Period: 7/1/2021 - 6/30/2022
Wage Rate per Hour: $26.15
Supplemental Benefit Rate per Hour: $10.07

(Mason Tenders District Council)

IRON WORKER - ORNAMENTAL
(Ratio of Apprentice to Journeyperson: 1 to 1, 1 to 4)

Iron Worker (Ornamental) - First Year

Effective Period: 7/1/2021 - 6/30/2022
Wage Rate per Hour: $20.63
Supplemental Benefit Rate per Hour: $17.61

Iron Worker (Ornamental) - Second Year

Effective Period: 7/1/2021 - 6/30/2022
Wage Rate per Hour: $24.22
Supplemental Benefit Rate per Hour: $18.86

Iron Worker (Ornamental) - Third Year

Effective Period: 7/1/2021 - 6/30/2022
Wage Rate per Hour: $27.80
Supplemental Benefit Rate per Hour: $20.12

Iron Worker (Ornamental) - Fourth Year

Effective Period: 7/1/2021 - 6/30/2022
Wage Rate per Hour: $31.38
Supplemental Benefit Rate per Hour: $21.38

(Local #580)

IRON WORKER - STRUCTURAL
(Ratio of Apprentice to Journeyperson: 1 to 1, 1 to 6)

Iron Worker (Structural) - 1st Six Months

Effective Period: 7/1/2021 - 6/30/2022
Wage Rate per Hour: $28.21
Supplemental Benefit Rate per Hour: $57.12

Iron Worker (Structural) - 7- 18 Months

Effective Period: 7/1/2021 - 6/30/2022
Wage Rate per Hour: $28.81
Supplemental Benefit Rate per Hour: $57.12

Iron Worker (Structural) - 19 - 36 months

Effective Period: 7/1/2021 - 6/30/2022
Wage Rate per Hour: $29.42
Supplemental Benefit Rate per Hour: $57.12

(Local #40 and #361)

LABORER (FOUNDATION, CONCRETE, EXCAVATING, STREET PIPE LAYER & COMMON)
(Ratio Apprentice to Journeyperson: 1 to 1, 1 to 3)

Laborer (Foundation, Concrete, Excavating, Street Pipe Layer & Common) - First 1000 hours

Effective Period: 7/1/2021 - 6/30/2022
Wage Rate Per Hour: 50% of Journeyperson's rate
Supplemental Rate Per Hour: $48.63

Laborer (Foundation, Concrete, Excavating, Street Pipe Layer & Common) - Second 1000 hours

Effective Period: 7/1/2021 - 6/30/2022
Wage Rate Per Hour: 60% of Journeyperson's rate
Supplemental Rate Per Hour: $48.63

Laborer (Foundation, Concrete, Excavating, Street Pipe Layer & Common) - Third 1000 hours

Effective Period: 7/1/2021 - 6/30/2022
Wage Rate Per Hour: 75% of Journeyperson's rate
Supplemental Rate Per Hour: $48.63

Laborer (Foundation, Concrete, Excavating, Street Pipe Layer & Common) - Fourth 1000 hours

Effective Period: 7/1/2021 - 6/30/2022
Wage Rate Per Hour: 90% of Journeyperson's rate
Supplemental Rate Per Hour: $48.63

(Local #731)

MARBLE MECHANICS
(Ratio of Apprentice to Journeyperson: 1 to 1, 1 to 4)

Cutters & Setters - First 750 Hours

Effective Period: 7/1/2021 - 6/30/2022
Wage and Supplemental Rate Per Hour: 40% of Journeyperson's rate

NO BENEFITS PAID DURING THE FIRST TWO MONTHS (PROBATIONARY PERIOD)

Cutters & Setters - Second 750 Hours

Effective Period: 7/1/2021 - 6/30/2022
Wage and Supplemental Rate Per Hour: 45% of Journeyperson's rate

Cutters & Setters - Third 750 Hours

Effective Period: 7/1/2021 - 6/30/2022
Wage and Supplemental Rate Per Hour: 50% of Journeyperson's rate

Cutters & Setters - Fourth 750 Hours

Effective Period: 7/1/2021 - 6/30/2022
Wage and Supplemental Rate Per Hour: 55% of Journeyperson's rate

Cutters & Setters - Fifth 750 Hours

Effective Period: 7/1/2021 - 6/30/2022
Wage and Supplemental Rate Per Hour: 60% of Journeyperson's rate

Cutters & Setters - Sixth 750 Hours

Effective Period: 7/1/2021 - 6/30/2022
Wage and Supplemental Rate Per Hour: 65% of Journeyperson's rate

Cutters & Setters - Seventh 750 Hours

Effective Period: 7/1/2021 - 6/30/2022
Wage and Supplemental Rate Per Hour: 70% of Journeyperson's rate

Cutters & Setters - Eighth 750 Hours

Effective Period: 7/1/2021 - 6/30/2022
Wage and Supplemental Rate Per Hour: 75% of Journeyperson's rate

Cutters & Setters - Ninth 750 Hours

Effective Period: 7/1/2021 - 6/30/2022
Wage and Supplemental Rate Per Hour: 85% of Journeyperson's rate

Cutters & Setters - Tenth 750 Hours

Effective Period: 7/1/2021 - 6/30/2022
Wage and Supplemental Rate Per Hour: 95% of Journeyperson's rate

Polishers & Finishers - First 900 Hours

Effective Period: 7/1/2021 - 6/30/2022
Wage and Supplemental Rate Per Hour: 70% of Journeyperson's rate

NO BENEFITS PAID DURING THE FIRST TWO MONTHS (PROBATIONARY PERIOD)

Polishers & Finishers - Second 900 Hours

Effective Period: 7/1/2021 - 6/30/2022
Wage and Supplemental Rate Per Hour: 80% of Journeyperson's rate

Polishers & Finishers - Third 900 Hours

Effective Period: 7/1/2021 - 6/30/2022
Wage and Supplemental Rate Per Hour: 90% of Journeyperson's rate

(Local #7)

MASON TENDER
(Ratio of Apprentice to Journeyperson: 1 to 1, 1 to 3)

Mason Tender - First Year

Effective Period: 7/1/2021 - 6/30/2022
Wage Rate per Hour: $20.20
Supplemental Benefit Rate per Hour: $10.07

Mason Tender - Second Year

Effective Period: 7/1/2021 - 6/30/2022
Wage Rate per Hour: $22.15
Supplemental Benefit Rate per Hour: $10.07

Mason Tender - Third Year

Effective Period: 7/1/2021 - 6/30/2022
Wage Rate per Hour: $23.65
Supplemental Benefit Rate per Hour: $10.07

Mason Tender - Fourth Year

Effective Period: 7/1/2021 - 6/30/2022
Wage Rate per Hour: $26.15
Supplemental Benefit Rate per Hour: $10.07

(Local #79)

METALLIC LATHER
(Ratio of Apprentice to Journeyperson: 1 to 1, 1 to 3)

Metallic Lather (First Year)

Effective Period: 7/1/2021 - 6/30/2022
Wage Rate per Hour: $21.00
Supplemental Benefit Rate per Hour: $17.87

Metallic Lather (Second Year)

Effective Period: 7/1/2021 - 6/30/2022
Wage Rate per Hour: $22.00
Supplemental Benefit Rate per Hour: $16.87

Metallic Lather (Third Year)

Effective Period: 7/1/2021 - 6/30/2022
Wage Rate per Hour: $33.10
Supplemental Benefit Rate per Hour: $21.32

Metallic Lather (Fourth Year)

Effective Period: 7/1/2021 - 6/30/2022
Wage Rate per Hour: $35.60
Supplemental Benefit Rate per Hour: $21.82

(Local #46)

MILLWRIGHT
(Ratio of Apprentice to Journeyperson: 1 to 1, 1 to 4)

Millwright (First Year)

Effective Period: 7/1/2021 - 6/30/2022
Wage Rate per Hour: $30.74
Supplemental Benefit Rate per Hour: $35.19

Millwright (Second Year)

Effective Period: 7/1/2021 - 6/30/2022
Wage Rate per Hour: $36.19
Supplemental Benefit Rate per Hour: $38.89

Millwright (Third Year)

Effective Period: 7/1/2021 - 6/30/2022
Wage Rate per Hour: $41.64
Supplemental Benefit Rate per Hour: $43.24

Millwright (Fourth Year)

Effective Period: 7/1/2021 - 6/30/2022
Wage Rate per Hour: $52.54
Supplemental Benefit Rate per Hour: $50.00

(Local #740)

PAINTER
(Ratio of Apprentice to Journeyperson: 1 to 1, 1 to 3)

Painter - Brush & Roller - First Year

Effective Period: 7/1/2021 - 6/30/2022
Wage Rate per Hour: $17.20
Supplemental Benefit Rate per Hour: $16.67

Painter - Brush & Roller - Second Year

Effective Period: 7/1/2021 - 6/30/2022
Wage Rate per Hour: $21.50
Supplemental Benefit Rate per Hour: $21.44

Painter - Brush & Roller - Third Year

Effective Period: 7/1/2021 - 6/30/2022
Wage Rate per Hour: $25.80
Supplemental Benefit Rate per Hour: $25.27

Painter - Brush & Roller - Fourth Year

Effective Period: 7/1/2021 - 6/30/2022
Wage Rate per Hour: $34.40
Supplemental Benefit Rate per Hour: $32.51

(District Council of Painters)

PAINTER - METAL POLISHER
(Ratio of Apprentice to Journeyperson: 1 to 1, 1 to 3)

Metal Polisher (First Year)

Effective Period: 7/1/2021 - 6/30/2022
Wage Rate per Hour: $16.00
Supplemental Benefit Rate per Hour: $7.36
New Construction - Wage Rate Per Hour: $16.39
Scaffold Over 34 Feet - Wage Rate Per Hour: $18.50

Metal Polisher (Second Year)

Effective Period: 7/1/2021 - 6/30/2022
Wage Rate per Hour: $17.00
Supplemental Benefit Rate per Hour: $7.36
New Construction - Wage Rate Per Hour: $17.44
Scaffold Over 34 Feet - Wage Rate Per Hour: $19.50

Metal Polisher (Third Year)

Effective Period: 7/1/2021 - 6/30/2022
Wage Rate per Hour: $18.00
Supplemental Benefit Rate per Hour: $7.36
New Construction - Wage Rate Per Hour: $18.54
Scaffold Over 34 Feet - Wage Rate Per Hour: $20.50

(Local 8A-28)

PAINTER - STRUCTURAL STEEL
(Ratio of Apprentice to Journeyperson: 1 to 1, 1 to 3)

Painters - Structural Steel (First Year)

Effective Period: 7/1/2021 - 6/30/2022
Wage and Supplemental Rate Per Hour: 40% of Journeyperson's rate

Painters - Structural Steel (Second Year)

Effective Period: 7/1/2021 - 6/30/2022
Wage and Supplemental Rate Per Hour: 60% of Journeyperson's rate

Painters - Structural Steel (Third Year)

Effective Period: 7/1/2021 - 6/30/2022
Wage and Supplemental Rate Per Hour: 80% of Journeyperson's rate

(Local #806)

PAVER AND ROADBUILDER
(Ratio of Apprentice to Journeyperson: 1 to 1, 1 to 3)

Paver and Roadbuilder - First Year (Minimum 1000 hours)

Effective Period: 7/1/2021 - 6/30/2022
Wage Rate per Hour: $29.86
Supplemental Benefit Rate per Hour: $23.55

Paver and Roadbuilder - Second Year (Minimum 1000 hours)

Effective Period: 7/1/2021 - 6/30/2022
Wage Rate per Hour: $31.50
Supplemental Benefit Rate per Hour: $23.55

(Local #1010)

PLASTERER
(Ratio of Apprentice to Journeyperson: 1 to 1, 1 to 3)
(Each Term is 800 Hours.)

Plasterer - First Term

Effective Period: 7/1/2021 - 6/30/2022
Wage Rate Per Hour: 55% of Journeyperson's rate
Supplemental Rate Per Hour: $17.48

Plasterer - Second Term

Effective Period: 7/1/2021 - 6/30/2022
Wage Rate Per Hour: 60% of Journeyperson's rate
Supplemental Rate Per Hour: $18.63

Plasterer - Third Term

Effective Period: 7/1/2021 - 6/30/2022
Wage Rate Per Hour: 70% of Journeyperson's rate
Supplemental Rate Per Hour: $20.93

Plasterer - Fourth Term

Effective Period: 7/1/2021 - 6/30/2022
Wage Rate Per Hour: 75% of Journeyperson's rate
Supplemental Rate Per Hour: $22.10

(Local #262)

PLASTERER - TENDER
(Ratio of Apprentice to Journeyperson: 1 to 1, 1 to 3)

Plasterer Tender - First Year

Effective Period: 7/1/2021 - 6/30/2022
Wage Rate per Hour: $20.20
Supplemental Benefit Rate per Hour: $10.07

Plasterer Tender - Second Year

Effective Period: 7/1/2021 - 6/30/2022
Wage Rate per Hour: $22.15
Supplemental Benefit Rate per Hour: $10.07

Plasterer Tender - Third Year

Effective Period: 7/1/2021 - 6/30/2022
Wage Rate per Hour: $23.65
Supplemental Benefit Rate per Hour: $10.07

Plasterer Tender - Fourth Year

Effective Period: 7/1/2021 - 6/30/2022

Wage Rate per Hour: **$26.15**
Supplemental Benefit Rate per Hour: **$10.07**

(Local #79)

PLUMBER
(Ratio of Apprentice to Journeyperson: 1 to 1, 1 to 3)

Plumber - First Year: 1st Six Months

Effective Period: 7/1/2021 - 6/30/2022
Wage Rate per Hour: **$16.78**
Supplemental Benefit Rate per Hour: **$5.43**

Plumber - First Year: 2nd Six Months

Effective Period: 7/1/2021 - 6/30/2022
Wage Rate per Hour: **$19.78**
Supplemental Benefit Rate per Hour: **$6.43**

Plumber - Second Year

Effective Period: 7/1/2021 - 6/30/2022
Wage Rate per Hour: **$28.36**
Supplemental Benefit Rate per Hour: **$21.19**

Plumber - Third Year

Effective Period: 7/1/2021 - 6/30/2022
Wage Rate per Hour: **$30.46**
Supplemental Benefit Rate per Hour: **$21.19**

Plumber - Fourth Year

Effective Period: 7/1/2021 - 6/30/2022
Wage Rate per Hour: **$33.31**
Supplemental Benefit Rate per Hour: **$21.19**

Plumber - Fifth Year: 1st Six Months

Effective Period: 7/1/2021 - 6/30/2022
Wage Rate per Hour: **$34.71**

Supplemental Benefit Rate per Hour: $21.19

Plumber - Fifth Year: 2nd Six Months

Effective Period: 7/1/2021 - 6/30/2022
Wage Rate per Hour: $46.78
Supplemental Benefit Rate per Hour: $21.19

(Plumbers Local #1)

POINTER, WATERPROOFER, CAULKER, SANDBLASTER, STEAMBLASTER
(Exterior Building Renovation)
(Ratio of Apprentice to Journeyperson: 1 to 1, 1 to 4)

Pointer, Waterproofer, Caulker, Sandblaster, Steamblaster - First Year

Effective Period: 7/1/2021 - 6/30/2022
Wage Rate per Hour: $28.92
Supplemental Benefit Rate per Hour: $14.81

Pointer, Waterproofer, Caulker, Sandblaster, Steamblaster - Second Year

Effective Period: 7/1/2021 - 6/30/2022
Wage Rate per Hour: $32.58
Supplemental Benefit Rate per Hour: $19.86

Pointer, Waterproofer, Caulker, Sandblaster, Steamblaster - Third Year

Effective Period: 7/1/2021 - 6/30/2022
Wage Rate per Hour: $37.63
Supplemental Benefit Rate per Hour: $23.61

Pointer, Waterproofer, Caulker, Sandblaster, Steamblaster - Fourth Year

Effective Period: 7/1/2021 - 6/30/2022
Wage Rate per Hour: $45.44
Supplemental Benefit Rate per Hour: $24.61

(Bricklayer District Council)

ROOFER
(Ratio of Apprentice to Journeyperson: 1 to 1, 1 to 2)

Roofer - First Year

Effective Period: 7/1/2021 - 6/30/2022
Wage Rate Per Hour: 35% of Journeyperson's rate
Supplemental Benefit Rate Per Hour: $3.51

Roofer - Second Year

Effective Period: 7/1/2021 - 6/30/2022
Wage Rate Per Hour: 50% of Journeyperson's rate
Supplemental Benefit Rate Per Hour: $17.54

Roofer - Third Year

Effective Period: 7/1/2021 - 6/30/2022
Wage Rate Per Hour: 60% of Journeyperson's rate
Supplemental Benefit Rate Per Hour: $20.99

Roofer - Fourth Year

Effective Period: 7/1/2021 - 6/30/2022
Wage Rate Per Hour: 75% of Journeyperson's rate
Supplemental Benefit Rate Per Hour: $26.18

(Local #8)

SHEET METAL WORKER
(Ratio of Apprentice to Journeyperson: 1 to 1, 1 to 3)

Sheet Metal Worker (0-6 Months)

Effective Period: 7/1/2021 - 6/30/2022
Wage Rate Per Hour: 25% of Journeyperson's rate
Supplemental Rate Per Hour: $6.76

Sheet Metal Worker (7-18 Months)

Effective Period: 7/1/2021 - 6/30/2022
Wage Rate Per Hour: 35% of Journeyperson's rate
Supplemental Rate Per Hour: $19.55

Sheet Metal Worker (19-30 Months)

Effective Period: 7/1/2021 - 6/30/2022
Wage Rate Per Hour: 45% of Journeyperson's rate
Supplemental Rate Per Hour: $26.65

Sheet Metal Worker (31-36 Months)

Effective Period: 7/1/2021 - 6/30/2022
Wage Rate Per Hour: 55% of Journeyperson's rate
Supplemental Rate Per Hour: $31.50

Sheet Metal Worker (37-42 Months)

Effective Period: 7/1/2021 - 6/30/2022
Wage Rate Per Hour: 55% of Journeyperson's rate
Supplemental Rate Per Hour: $31.50

Sheet Metal Worker (43-48 Months)

Effective Period: 7/1/2021 - 6/30/2022
Wage Rate Per Hour: 70% of Journeyperson's rate
Supplemental Rate Per Hour: $38.78

Sheet Metal Worker (49-54 Months)

Effective Period: 7/1/2021 - 6/30/2022
Wage Rate Per Hour: 70% of Journeyperson's rate
Supplemental Rate Per Hour: $38.78

Sheet Metal Worker (55-60 Months)

Effective Period: 7/1/2021 - 6/30/2022
Wage Rate Per Hour: 80% of Journeyperson's rate
Supplemental Rate Per Hour: $43.65

(Local #28)

SIGN ERECTOR
(Ratio of Apprentice to Journeyperson: 1 to 1, 1 to 4)

Sign Erector - First Year: 1st Six Months

Effective Period: 7/1/2021 - 6/30/2022
Wage Rate Per Hour: 35% of Journeyperson's rate
Supplemental Rate Per Hour: $16.51

Sign Erector - First Year: 2nd Six Months

Effective Period: 7/1/2021 - 6/30/2022
Wage Rate Per Hour: 40% of Journeyperson's rate
Supplemental Rate Per Hour: $18.74

Sign Erector - Second Year: 1st Six Months

Effective Period: 7/1/2021 - 6/30/2022
Wage Rate Per Hour: 45% of Journeyperson's rate
Supplemental Rate Per Hour: $20.96

Sign Erector - Second Year: 2nd Six Months

Effective Period: 7/1/2021 - 6/30/2022
Wage Rate Per Hour: 50% of Journeyperson's rate
Supplemental Rate Per Hour: $23.21

Sign Erector - Third Year: 1st Six Months

Effective Period: 7/1/2021 - 6/30/2022
Wage Rate Per Hour: 55% of Journeyperson's rate
Supplemental Rate Per Hour: $31.44

Sign Erector - Third Year: 2nd Six Months

Effective Period: 7/1/2021 - 6/30/2022
Wage Rate Per Hour: 60% of Journeyperson's rate
Supplemental Rate Per Hour: $34.20

Sign Erector - Fourth Year: 1st Six Months

Effective Period: 7/1/2021 - 6/30/2022
Wage Rate Per Hour: 65% of Journeyperson's rate
Supplemental Rate Per Hour: $37.76

Sign Erector - Fourth Year: 2nd Six Months

Effective Period: 7/1/2021 - 6/30/2022
Wage Rate Per Hour: 70% of Journeyperson's rate
Supplemental Rate Per Hour: $40.62

Sign Erector - Fifth Year

Effective Period: 7/1/2021 - 6/30/2022

Wage Rate Per Hour: 75% of Journeyperson's rate
Supplemental Rate Per Hour: $43.44

Sign Erector - Sixth Year

Effective Period: 7/1/2021 - 6/30/2022
Wage Rate Per Hour: 80% of Journeyperson's rate
Supplemental Rate Per Hour: $46.27

(Local #137)

STEAMFITTER
(Ratio of Apprentice to Journeyperson: 1 to 1, 1 to 3)

Steamfitter - First Year

Effective Period: 7/1/2021 - 6/30/2022
Wage Rate and Supplemental Per Hour: 40% of Journeyperson's rate

Steamfitter - Second Year

Effective Period: 7/1/2021 - 6/30/2022
Wage Rate and Supplemental Rate Per Hour: 50% of Journeyperson's rate.

Steamfitter - Third Year

Effective Period: 7/1/2021 - 6/30/2022
Wage Rate and Supplemental Rate per Hour: 65% of Journeyperson's rate.

Steamfitter - Fourth Year

Effective Period: 7/1/2021 - 6/30/2022
Wage Rate and Supplemental Rate Per Hour: 80% of Journeyperson's rate.

Steamfitter - Fifth Year

Effective Period: 7/1/2021 - 6/30/2022
Wage Rate and Supplemental Rate Per Hour: 85% of Journeyperson's rate.

(Local #638)

STEAMFITTER - REFRIGERATION & AIR CONDITIONER
(Ratio of Apprentice to Journeyperson: 1 to 1, 1 to 3)

Refrigeration & Air Conditioner (First Year)

Effective Period: 7/1/2021 - 6/30/2022
Wage Rate per Hour: $20.75
Supplemental Benefit Rate per Hour: $12.99

Refrigeration & Air Conditioner (Second Year)

Effective Period: 7/1/2021 - 6/30/2022
Wage Rate per Hour: $25.04
Supplemental Benefit Rate per Hour: $14.23

Refrigeration & Air Conditioner (Third Year)

Effective Period: 7/1/2021 - 6/30/2022
Wage Rate per Hour: $29.17
Supplemental Benefit Rate per Hour: $15.53

Refrigeration & Air Conditioner (Fourth Year)

Effective Period: 7/1/2021 - 6/30/2022
Wage Rate per Hour: $35.22
Supplemental Benefit Rate per Hour: $17.29

(Local #638-B)

STONE MASON - SETTER
(Ratio Apprentice of Journeyperson: 1 to 1, 1 to 2)

Stone Mason - Setters - First 750 Hours

Effective Period: 7/1/2021 - 6/30/2022
Wage and Supplemental Rate Per Hour: 50% of Journeyperson's rate

Stone Mason - Setters - Second 750 Hours

Effective Period: 7/1/2021 - 6/30/2022

Wage Rate Per Hour: 60% of Journeyperson's rate
Supplemental Rate Per Hour: 50% of Journeyperson's rate

Stone Mason - Setters - Third 750 Hours

Effective Period: 7/1/2021 - 6/30/2022
Wage Rate Per Hour: 70% of Journeyperson's rate
Supplemental Rate Per Hour: 50% of Journeyperson's rate

Stone Mason - Setters - Fourth 750 Hours

Effective Period: 7/1/2021 - 6/30/2022
Wage Rate Per Hour: 80% of Journeyperson's rate
Supplemental Rate Per Hour: 50% of Journeyperson's rate

Stone Mason - Setters - Fifth 750 Hours

Effective Period: 7/1/2021 - 6/30/2022
Wage Rate Per Hour: 90% of Journeyperson's rate
Supplemental Rate Per Hour: 50% of Journeyperson's rate

Stone Mason - Setters - Sixth 750 Hours

Effective Period: 7/1/2021 - 6/30/2022
Wage Rate Per Hour: 100% of Journeyperson's rate
Supplemental Rate Per Hour: 50% of Journeyperson's rate

(Bricklayers District Council)

TAPER
(Ratio of Apprentice to Journeyperson: 1 to 1, 1 to 4)

Drywall Taper - First Year

Effective Period: 7/1/2021 - 6/30/2022
Wage Rate per Hour: $20.97
Supplemental Benefit Rate per Hour: $13.55

Drywall Taper - Second Year

Effective Period: 7/1/2021 - 6/30/2022
Wage Rate per Hour: $24.24
Supplemental Benefit Rate per Hour: $20.31

Drywall Taper - Third Year

Effective Period: 7/1/2021 - 6/30/2022
Wage Rate per Hour: $29.08
Supplemental Benefit Rate per Hour: $22.06

Drywall Taper - Fourth Year

Effective Period: 7/1/2021 - 6/30/2022
Wage Rate per Hour: $38.78
Supplemental Benefit Rate per Hour: $25.56

(Local #1974)

TILE LAYER - SETTER
(Ratio of Apprentice to Journeyperson: 1 to 1, 1 to 4)

Tile Layer - Setter - First 750 Hours

Effective Period: 7/1/2021 - 6/30/2022
Wage and Supplemental Rate Per Hour:35% of Journeyperson's rate

Tile Layer - Setter - Second 750 Hours

Effective Period: 7/1/2021 - 6/30/2022
Wage and Supplemental Rate Per Hour 40% of Journeyperson's rate

Tile Layer - Setter - Third 750 Hours

Effective Period: 7/1/2021 - 6/30/2022
Wage and Supplemental Rate Per Hour: 50% of Journeyperson's rate

Tile Layer - Setter - Fourth 750 Hours

Effective Period: 7/1/2021 - 6/30/2022
Wage and Supplemental Rate Per Hour: 55% of Journeyperson's rate

Tile Layer - Setter - Fifth 750 Hours

Effective Period: 7/1/2021 - 6/30/2022
Wage and Supplemental Rate Per Hour: 60% of Journeyperson's rate

Tile Layer - Setter - Sixth 750 Hours

Effective Period: 7/1/2021 - 6/30/2022
Wage and Supplemental Rate Per Hour: 65% of Journeyperson's rate

Tile Layer - Setter - Seventh 750 Hours

Effective Period: 7/1/2021 - 6/30/2022
Wage and Supplemental Rate Per Hour: 70% of Journeyperson's rate

Tile Layer - Setter - Eighth 750 Hours

Effective Period: 7/1/2021 - 6/30/2022
Wage and Supplemental Rate Per Hour: 75% of Journeyperson's rate

Tile Layer - Setter - Ninth 750 Hours

Effective Period: 7/1/2021 - 6/30/2022
Wage and Supplemental Rate Per Hour:80% of Journeyperson's rate

Tile Layer - Setter - Tenth 750 Hours

Effective Period: 7/1/2021 - 6/30/2022
Wage and Supplemental Rate Per Hour: 90% of Journeyperson's rate

(Local #7)

TIMBERPERSON
(Ratio of Apprentice to Journeyperson: 1 to 1, 1 to 6)

Timberperson - First Year

Effective Period: 7/1/2021 - 6/30/2022
Wage Rate Per Hour: $21.42
Supplemental Rate Per Hour: $35.22

Timberperson - Second Year

Effective Period: 7/1/2021 - 6/30/2022
Wage Rate Per Hour: $26.53
Supplemental Rate Per Hour: $35.22

Timberperson - Third Year

Effective Period: 7/1/2021 - 6/30/2022
Wage Rate Per Hour: $34.18

Supplemental Rate Per Hour: $35.22

Timberperson - Fourth Year

Effective Period: 7/1/2021 - 6/30/2022
Wage Rate Per Hour: $41.84
Supplemental Rate Per Hour: $35.22

(Local #1536)

Leonard A. Mancusi
SENIOR ASSISTANT COMPTROLLER

THE CITY OF NEW YORK
OFFICE OF THE COMPTROLLER
1 CENTRE STREET ROOM 1120
NEW YORK, N.Y. 10007-2341

ALAN G. HEVESI
COMPTROLLER

TELEPHONE: (212) 669-3622
FAX NUMBER: (212) 669-8499

MEMORANDUM

November 6, 2000

To Agency Chief Contracting Officers

From: Leonard A. Mancusi

Re: Security at Construction Sites

Prior to the enactment of Administrative Code §6-109, security guards on construction sites were not subject to prevailing wages. Security guards under the New York State labor law are covered under §230 which provides that prevailing wages are to be paid for security guards in existing buildings. §6-109 of the Administrative Code which was enacted in 1996 closed this loophole by including all security guards working pursuant to a city contract as a prevailing wage trade.

Although some construction contract boilerplate language has been amended to include §6-109, sub-contractors performing security services have advised us that they were not aware of this provision and, since traditionally, security guards were not a covered trade on construction sites, and they were not advised by a prime contractor that they would have to pay prevailing wages, they have not been doing so.

To avoid the possibility of issuing stop payments against prime contractors for the failure of their security service sub-contractors to pay

prevailing wages, we suggest that you write to all your existing security guard sub-contractors and their primes and in the future, upon approval of a security guard sub-contractor, advise the contractors of their obligation to pay prevailing wages under §6-109 of the Administrative Code.

As always, your cooperation is appreciated.

LAM:er
ACCO.SECURITY AT SITES

(NO TEXT ON THIS PAGE)

Department of Design and Construction

INFRASTRUCTURE DIVISION

BUREAU OF DESIGN

VOLUME 2 OF 3

PROJECT ID: SANDRESPC

EAST SIDE COASTAL RESILENCY FROM MONTGOMERY STREET TO EAST 25TH STREET

TOGETHER WITH ALL WORK INCIDENTAL THERETO

SEWER WORK, INTERCEPTOR GATES AND GATE HOUSES, STREET LIGHTING, AND TRAFFIC WORK

Together With All Work Incidental Thereto
BOROUGH OF MANHATTAN
CITY OF NEW YORK

_____

Contractor.

_____

Dated_____, **20**_____

_____

APPROVED AS TO FORM
CERTIFIED AS TO LEGAL AUTHORITY

_____

Acting Corporation Counsel

_____

Dated_____, **20**_____

_____

(NO TEXT ON THIS PAGE)

Department of Design and Construction

INFRASTRUCTURE DIVISION

BUREAU OF DESIGN

VOLUME 2 OF 3

PROJECT ID: SANDRESPC

EAST SIDE COASTAL RESILENCY FROM MONTGOMERY STREET TO EAST 25TH STREET

TOGETHER WITH ALL WORK INCIDENTAL THERETO

SEWER WORK, INTERCEPTOR GATES AND GATE HOUSES, STREET LIGHTING, AND TRAFFIC WORK

Together With All Work Incidental Thereto
BOROUGH OF MANHATTAN
CITY OF NEW YORK

_____

Contractor.

_____

Dated_____, **20**_____

_____

Department of Design and Construction

INFRASTRUCTURE DIVISION

BUREAU OF DESIGN

VOLUME 2 OF 3

PROJECT ID: SANDRESPC

EAST SIDE COASTAL RESILENCY FROM MONTGOMERY STREET TO EAST 25TH STREET

TOGETHER WITH ALL WORK INCIDENTAL THERETO

SEWER WORK, INTERCEPTOR GATES AND GATE HOUSES, STREET LIGHTING, AND TRAFFIC WORK

Together With All Work Incidental Thereto
BOROUGH OF MANHATTAN
CITY OF NEW YORK

_____
Contractor.

_____

Dated_____, 20_____

_____

APPROVED AS TO FORM
CERTIFIED AS TO LEGAL AUTHORITY

_____
Acting Corporation Counsel

CAC
10/18/2021

_____

Dated October 18, 2021

_____

Department of Design and Construction

THE CITY OF NEW YORK
DEPARTMENT OF DESIGN AND CONSTRUCTION
DIVISION OF INFRASTRUCTURE
30-30 THOMSON AVENUE
LONG ISLAND CITY, NY, 11101
TEL: 718.391.1000
WEB: www.nyc.gov/ddc

DDC SPONSOR AGENCY:

NEW YORK CITY DEPARTMENT OF PARKS AND RECREATION

PREPARED BY:

AKRF / KSE JV

DATE PREPARED:

July 20, 2020

VOLUME 3 OF 3

FOR FURNISHING ALL LABOR AND MATERIALS NECESSARY AND REQUIRED FOR:

PROJECT ID: SANDRESPC

SCHEDULE A SPECIFICATIONS AND REVISIONS TO STANDARD SPECIFICATIONS

FOR FURNISHING ALL LABOR AND MATERIALS NECESSARY AND REQUIRED FOR:

EAST SIDE COASTAL RESILENCY FROM MONTGOMERY STREET TO EAST 25TH STREET

SEWER WORK, INTERCEPTOR GATES AND GATE HOUSES, STREET LIGHTING, AND TRAFFIC WORK

TOGETHER WITH ALL WORK INCIDENTAL THERETO

BOROUGH OF MANHATTAN

CITY OF NEW YORK

HUD FUNDED

VOLUME 3 OF 3

TABLE OF CONTENTS

SECTION	DESCRIPTION	PAGES
SPECIFICATIONS AND STANDARDS OF NEW YORK CITY		1 to 2
SCHEDULE A	GENERAL CONDITIONS TO CONSTRUCTION CONTRACT	SA-1 to SA-12
DRAWINGS	LIST OF CONTRACT AND STANDARD DRAWINGS	C-1 TO C-25
R – PAGES	REVISIONS TO STANDARD SPECIFICATIONS	R-1 to R-2
PROJECT DESCRIPTION	PROJECT DESCRIPTION AND NYSDOT SPECIFICATION REFERENCES	PD–1 to PD-2
GENERAL-PAGES	GENERAL SPECIAL SPECIFICATIONS	G-1 to G-33
IG/PC-PAGES	SPECIAL INTERCEPTOR GATES AND PARALLEL CONVEYANCE SPECIFICATIONS	IG/PC-1 to IG/PC-747
IGB- PAGES	INTERCEPTOR GATE BUILDINGS	IGB-1 to IGB-494
SM-Pages	SITE SPECIALTIES AND MONITORING	SM-1 to SM 79
S – PAGES	SPECIAL PROVISIONS	S-1 to S-78
HAZ – PAGES	SPECIFICATIONS FOR HANDLING, TRANSPORTATION POTENTIALLY HAZARDOUS CONTAMINATED MATERIALS	HAZ-1 to HAZ-34
EP7(1.0)-PAGES	GAS COST SHARING (EP-7) STANDARD SPECIFICATIONS	EP7-1 to EP7-29
JB – PAGES	JOINT BID	JB-1 to JB-189
HUD-PAGES	U.S. DEPARTMENT OF HOUSING AND URBAN DEVELOPMENT PROJECTS	HUD-1 to HUD-64

(NO TEXT ON THIS PAGE)

SPECIFICATIONS AND STANDARDS OF NEW YORK CITY

The following New York City Department of Transportation (NYCDOT) reference documents are available online at: http://www1.nyc.gov/site/ddc/resources/publications.page and https://www1.nyc.gov/html/dot/html/about/dotlibrary.shtml#spec or for purchase between 9:00 A.M. and 3:00 P.M. Bid Window, at 55 Water St., Ground Floor, NYC, N.Y. 10041. Tel. (212) 839-9435.

1. NYCDOT Standard Highway Specifications, August 1, 2015
2. NYC DOT Standard Details of Construction, July 2010 (Revised March 15, 2016)
3. NYCDOT Division of Street Lighting Specifications
4. NYCDOT Division of Street Lighting Standard Drawings
5. NYCDOT Standard Specifications for Traffic Signals
6. NYCDOT Standard Drawings for Traffic Signals

The following reference documents for New York City Department of Environmental Protection (NYCDEP) are available online at: http://www1.nyc.gov/site/ddc/resources/publications.page or for pick up between 8:00 A.M. and 4:00 P.M. at 30-30 Thomson Avenue, 3rd Floor, Division of Infrastructure, Long Island City, N.Y. 11101.
Contact: Mr. Nader Soliman, Tel. (718) 391-1179

1. NYCDEP Standard Sewer and Water Main Specifications, July 1, 2014
2. NYCDEP Instructions for Concrete Specifications, Jan. 92
3. NYCDEP General Specification 11-Concrete, November 1991
4. NYCDEP Sewer Design Standards, (September 2007) Revised August 2018

The following reference documents for New York City Department of Environmental Protection (NYCDEP) are available online at: https://www1.nyc.gov/site/dep/water/green-infrastructure.page or for pick up between 8:00 A.M. and 4:00 P.M. at 30-30 Thomson Avenue, 3rd Floor, Division of Infrastructure, Long Island City, N.Y. 11101.
Contact: Mr. Robert Kuhlmann, Tel. (718) 391-2145

1. NYCDEP Water Main Standard Drawings, November 2010
2. Specifications for Trunk Main Work, July 2014
3. Standard Design and Guidelines for Green Infrastructure Practices, latest version, available only online at: https://www1.nyc.gov/assets/dep/downloads/pdf/water/stormwater/green-infrastructure/green-infrastructure-standard-designs.pdf

Water main work material specifications are available at the Department of Environmental Protection, 59-17 Junction Boulevard, 3rd Floor Low-Rise Building, Flushing, N.Y. 11373-5108.
Contact: Mr. Tarlock Sahansra, P.E., Tel. (718) 595-5302
E-mail: TSAHANSRA@DEP.NYC.GOV

Standard Specifications and Drawings for New York City Fire Department Communications facilities of New York City are available online at https://www1.nyc.gov/assets/fdny/downloads/pdf/about/fdny-plant-operations-standard-drawings-specifications.pdf or for pick up from the FDNY Facilities Management Bureau, Plant Operations Engineering, 316 Sgt. Beers Avenue Cluster 1 Box 16, Fort Totten, N.Y. 11359.
Contact: Mr. Ed Durkin, Tel. (718) 281-3933

Tree Planting Standards of the City of New York Parks & Recreation are available at the following Department of Parks & Recreation website:
http://www.nycgovparks.org/pagefiles/53/Tree-Planting-Standards.pdf

SPECIFICATIONS AND STANDARDS OF PRIVATE UTILITIES

The Following reference document for Private Utility Work is available for pick up between 8:30 A.M. and 4:00 P.M. at 30-30 Thomson Avenue, First Floor Bid Procurement Room, L.I.C., N.Y. 11101.

1. CET SPECIFICATIONS AND SKETCHES dated November 2010.

SCHEDULE A

(GENERAL CONDITIONS TO CONSTRUCTION CONTRACT (INCLUDING GENERAL CONDITIONS RELATED TO ARTICLE 22 – INSURANCE)

PART I. REQUIRED INFORMATION

INFORMATION FOR BIDDERS SECTION 26 BID SECURITY The **Contractor** shall obtain a bid security in the amount indicated to the right.	Required provided the TOTAL BID PRICE set forth on the Bid Form is $1,000,000. or more. Certified Check: 2% of Bid Amount or Bond: 10% of Bid Amount
INFORMATION FOR BIDDERS SECTION 26 PERFORMANCE AND PAYMENT BONDS The **Contractor** shall obtain performance and payment bonds in the amount indicated to the right.	Required for contracts in the amount of $1,000,000 or more. Performance Security shall be in an amount equal to 100% of the Contract Price. Payment Security shall be in an amount equal to 100% of the Contract Price.
INFORMATION FOR BIDDERS DEPARTMENT OF DESIGN AND CONSTRUCTION SAFETY REQUIREMENTS The **Contractor** shall provide the safety personnel as indicated to the right.	■ Project Safety Representative ■ Dedicated, full-time Project Safety Manager
CONTRACT ARTICLE 14 DATE FOR SUBSTANTIAL COMPLETION The **Contractor** shall substantially complete the **Work** in the number of calendar days indicated to the right.	See Page SA-4
CONTRACT ARTICLE 15 LIQUIDATED DAMAGES If the **Contractor** fails to substantially complete the **Work** within the time fixed for substantial completion plus authorized time extensions or if the **Contractor**, in the sole determination of the **Commissioner**, has abandoned the **Work**, the **Contractor** shall pay to the **City** the amount indicated to the right.	$30,000. for each consecutive calendar day over substantial completion time

CONTRACT ARTICLE 17. **SUB-CONTRACTOR** The **Contractor** shall not make subcontracts totaling an amount more than the percentage of the total **Contract** price indicated to the right.	Not to exceed _49_% of the **Contract** price
CONTRACT ARTICLE 21. **RETAINAGE** The **Commissioner** shall deduct and retain until the substantial completion of the **Work** the percent value of the **Work** indicated to the right.	_5 %_ of the value of the **Work**
CONTRACT ARTICLE 22. **(Per Directions Below)**	See pages SA-5 through SA-12
CONTRACT ARTICLE 24. **DEPOSIT GUARANTEE** As security for the faithful performance of its obligations, the **Contractor**, upon filing its requisition for payment on **Substantial Completion**, shall deposit with the **Commissioner** a sum equal to the percentage of the **Contract** price indicated to the right.	1% of **Contract** price
CONTRACT ARTICLE 24. **PERIOD OF GUARANTEE** Periods of maintenance and guarantee other than the period set forth in Article 24.1 are indicated to the right.	Eighteen (18) Months, excluding Trees Twenty-four (24) Months for Tree Planting
CONTRACT ARTICLE 74. **STATEMENT OF WORK** The **Contractor** shall furnish all labor and materials and perform all **Work** in strict accordance with the **Contract Drawings**, **Specifications,** and all **Addenda** thereto, as **shown in the column to the right.**	**Addenda**, numbered: _____
CONTRACT ARTICLE 75. **COMPENSATION TO BE PAID TO CONTRACTOR** The **City** shall pay and the **Contractor** shall accept in full consideration for the performance of the **Contract**, subject to additions and deductions as provided herein**,** the total sum **shown in the column to the right,** being the amount at which the **Contract** was awarded to the **Contractor** at a public letting thereof, based upon the **Contractor's** bid for the **Contract.**	Amount for which the **Contract** was Awarded: _____ _____ Dollars ($_____)

CONTRACT ARTICLE 79. PARTICIPATION BY MINORITY-OWNED AND WOMEN-OWNED BUSINESS ENTERPRISES IN CITY PROCUREMENT	See M/WBE Utilization Plan in the PASSPort Procurement M/WBE Considerations Section.
STANDARD HIGHWAY SPECIFICATIONS SECTION 6.40 LIQUIDATED DAMAGES FOR ENGINEER'S FIELD OFFICE If the Contractor fails to satisfactorily provide the field office and all equipment specified in **Section 6.40 - Engineer's Field Office**, and/or if a cited deficiency exceed seventy two (72) hours after notice from the Engineer in writing, or is permitted to recur, liquidated damages will be assessed in the amount specified herein for each subsequent calendar day or part thereof that a cited deficiency resulting in nonpayment, as described in **Section 6.40.5**, is not corrected.	$ 500.00 for each calendar day of deficiency
STANDARD HIGHWAY SPECIFICATIONS SECTION 6.70 LIQUIDATED DAMAGES FOR MAINTENANCE AND PROTECTION OF TRAFFIC	$ 250.00 for each instance of failure to comply with the Maintenance and Protection of Traffic requirements within three (3) hours after written notice from the Engineer. $ 500.00 for each and every hour of failing to open the entire width of roadway to traffic the morning following a night/weekend work operation.
STANDARD HIGHWAY SPECIFICATIONS SECTION 7.13 LIQUIDATED DAMAGES FOR MAINTENANCE OF SITE If the Contractor fails to comply, within three (3) consecutive hours after written notice from the Engineer, with the requirements of **Section 7.13 - Maintenance of Site**, the Contractor shall pay to the City of New York, until such notice has been complied with or rescinded, the sum specified above per calendar day, for each instance of such failure, as liquidated damages and not as a penalty, for such default.	$ 6,000.00 for each calendar day, for each occurrence

Date for Substantial Completion (Reference: Article 14)

The Contractor shall substantially complete the Work within the Final Contract Duration determined in accordance with the terms and conditions set forth herein.

The Base Contract Duration for this project is _____1,460____consecutive calendar days ("ccds").

The Final Contract Duration shall be the Base Contract Duration when a check mark is indicated before the word "NO", below, and shall be the Base Contract Duration adjusted by the table set forth below when a check mark is indicated before the word "YES", below.

_____ YES ____√____ NO

When the Final Contract Duration is indicated above to be adjusted by the table below, the table may increase the Base Contract Duration depending on the date of scheduled substantial completion to avoid a scheduled substantial completion of the Work during the winter months. The date of scheduled substantial completion shall be determined by adding the Base Contract Duration to the date specified to commence work in the written Notice to Proceed. The Final Contract Duration shall then be determined as follows:

(a) Find the row that corresponds to the month of substantial completion based on the Base Contract Duration added to the date specified to commence work in the written Notice to Proceed.

(b) Find the number of days to be added to the Base Contract Duration in the table below. Add that number of days to the Base Contract Duration to obtain the Final Contract Duration in consecutive calendar days.

Month of Substantial Completion based on the Base Contract Duration	**Number of Days of adjustment**
January	150
February	120
March	90
April	60
May	30
June	0
July	0
August	0
September	0
October	0
November –December 15	0
December 16 – December 31	180

(GENERAL CONDITIONS RELATING TO ARTICLE 22 – INSURANCE)

PART II. TYPES OF INSURANCE, MINIMUM LIMITS AND SPECIAL CONDITIONS

Note: All certificate(s) of insurance submitted pursuant to Contract Article 22.3. 3 must be accompanied by a Certification by Broker consistent with Part III below and include the following information:

- **For each insurance policy, the name and NAIC number of issuing company, number of policy, and effective dates;**
- **Policy limits consistent with the requirements listed below;**
- **Additional insureds or loss payees consistent with the requirements listed below; and**
- **The number assigned to the Contract by the City (in the "Description of Operations" field).**

Insurance indicated by a blackened box (■) or by X in a □ to left will be required under this contract

Types of Insurance (per Article 22 in its entirety, including listed paragraph)	Minimum Limits and Special Conditions
■ Commercial General Liability Art. 22.1.1	The minimum limits shall be $ 3,000,000 per occurrence and $ 6,000,000 per project aggregate applicable to this **Contract.** Additional Insureds: 1. City of New York, including its officials and employees, with coverage at least as broad as ISO Form CG 20 10 and CG 20 37, 2. All person(s) or organization(s), if any, that Article 22.1.1(b) of the **Contract** requires to be named as Additional Insured(s), with coverage at least as broad as ISO Form CG 20 26. The Additional Insured endorsement shall either specify the entity's name, if known, or the entity's title (e.g., Project Manager), 3. U.S. Department of Housing and Urban Development (HUD), including its officials and employees. 4. New York City Housing Authority (NYCHA) , including its officials and employees. 5. New York City Economic Development Corporation (EDC) , including its officials and employees. 6. Consolidated Edison, Inc. 7. New York City Transit Authority (NYCTA), the Manhattan and Bronx Surface Transit Operating Authority (MaBSTOA), the Staten Island Rapid Transit Operating Authority (SIRTOA), MTA Capital Construction Co., the Metropolitan Transportation Authority (MTA) including its subsidiaries and affiliates 8. East River Housing Corporation (ERH) 9. Lower East Side Ecology Center

■ Workers' Compensation Art. 22.1.2 ■ Disability Benefits Insurance Art. 22.1.2 ■ Employers' Liability Art. 22.1.2 ■ Jones Act Art. 22.1.3 ■ U.S. Longshoremen's and Harbor Workers Compensation Act Art. 22.1.3	Workers' Compensation, Employers' Liability, and Disability Benefits Insurance: Statutory per New York State law without regard to jurisdiction. **Note:** The following forms are acceptable: (1) New York State Workers' Compensation Board Form No. C-105.2, (2) State Insurance Fund Form No. U-26.3, (3) New York State Workers' Compensation Board Form No. DB-120.1 and (4) Request for WC/DB Exemption Form No. CE-200. The City will not accept an ACORD form as proof of Workers' Compensation or Disability Insurance. Jones Act and U.S. Longshoremen's and Harbor Workers' Compensation Act: Statutory per U.S. Law. ☐ Additional Requirements:
■ Builders' Risk Art. 22.1.4	☐ Required: 100% of total bid amount ■ Required: 100 % of total bid amount for Item(s): ESCR-501 North Interceptor Gate Building and ESCR-502 South Interceptor Gate Building; **Contractor** the Named Insured; the **City** both an Additional Insured and one of the loss payees as its interests may appear. If the **Work** does not involve construction of a new building or gut renovation work, the **Contractor** may provide an installation floater in lieu of Builders Risk insurance. Note: Builders Risk Insurance may terminate upon **Substantial Completion** of the **Work** in its entirety.

■ Commercial Auto Liability Art. 22.1.5	$ 2,000,000 per accident combined single limit If vehicles are used for transporting hazardous materials, the **Contractor** shall provide pollution liability broadened coverage for covered vehicles (endorsement CA 99 48) as well as proof of MCS 90 Additional Insureds: 1. City of New York, including its officials and employees
☐Contractors Pollution Liability Art. 22.1.6	$_5,000,000_ per occurrence $_5,000,000_ aggregate Additional Insureds: 1. City of New York, including its officials and employees, and 2. _____ 3. _____
☐ Marine Protection and Indemnity Art. 22.1.7(a)	$_____ each occurrence $_____ aggregate Additional Insureds: 1. City of New York, including its officials and employees, and 2. _____ 3. _____
☐ Hull and Machinery Insurance Art. 22.1.7(b)	$_____ per occurrence $_____ aggregate Additional Insureds: 1. City of New York, including its officials and employees, and 2. _____ 3. _____

☐ Marine Pollution Liability Art. 22.1.7(c)	$ 1,000,000 per occurrence $ 1,000,000 aggregate Additional Insureds: 1. City of New York, including its officials and employees, and 2. _____ 3. _____
[OTHER] Art. 22.1.8 ■ Railroad Protection Liability Policy (ISO-RIMA or equivalent form) approved by Permittor covering the work to be performed at the designated site and affording protection for damages arising out of bodily injury or death, physical damage to or destruction of property, including damage to the Insured's own property and conforming to the following: • Policy Endorsement CG 28 31 - Pollution Exclusion Amendment is required to be endorsed onto the policy when environmental-related work and/or exposures exist. • Indicate the Name and address of the Contractor to perform the work, the Contract # and the name of the railroad property where the work is being performed and the Agency Permit. • Evidence of Railroad Protective Liability Insurance, must be provided in the form of the Original Policy. A detailed Insurance Binder (ACORD or Manuscript Form) will be accepted pending issuance of the Original Policy, which must be provided within 30 days of the Binder Approval.	$ 2,000,000 per occurrence $ 6,000,000 annual aggregate Named Insureds: 1. New York City Transit Authority (NYCTA), the Manhattan and Bronx Surface Transit Operation Authority (MaBSTOA), the Staten Island Rapid Transit Operation Authority (SIRTOA), MTA Capital Construction Co., the Metropolitan Transportation Authority (MTA) including its subsidiaries and affiliates, and the City of New York (as Owner) and all other indemnified parties.

[OTHER] Art. 22.1.8

■ Professional Liability

A. The Contractor's Professional Engineer shall maintain and submit evidence of Professional Liability Insurance in the minimum amount of $1,000,000 per claim. The policy or policies shall include an endorsement to cover the liability assumed by the Contractor under this Contract arising out of the negligent performance of professional services or caused by an error, omission or negligent act of the Contractor's Professional Engineer or anyone employed by the Contractor's Professional Engineer.

B. Claims-made policies will be accepted for Professional Liability Insurance. All such policies shall have an extended reporting period option or automatic coverage of not less than two (2) years. If available as an option, the Contractor's Professional Engineer shall purchase extended reporting period coverage effective on cancellation or termination of such insurance unless a new policy is secured with a retroactive date, including at least the last policy year.

[OTHER] Art. 22.1.8 ■ Engineer's Field Office **Section 6.40, Standard Highway Specifications**	Fire insurance, extended coverage and vandalism, malicious mischief and burglary, and theft insurance coverage in the amount of $40,000

[OTHER] Art. 22.1.8

■ The Following Additional Insurance Must Be Provided:

Umbrella/Excess Liability Insurance - The Contractor shall provide Umbrella/Excess Liability Insurance in the minimum amount of $45,000,000 per Occurrence and $45,000,000 in Aggregate. The policy terms and condition should be at least as broad as the underlying policies. The underlying policies should comply with the insurance provision as outlined by the contract. Defense cost should be in addition to the limit of liability. The City of New York, including its officials and employees, should be included as additional insured as respects to the noted project.

SCHEDULE A
(GENERAL CONDITIONS TO CONSTRUCTION CONTRACT)
(GENERAL CONDITIONS RELATING TO ARTICLE 22 – INSURANCE)

PART III. CERTIFICATES OF INSURANCE

All certificates of insurance (except certificates of insurance solely evidencing Workers' Compensation Insurance, Employer's Liability Insurance, and/or Disability Benefits Insurance) must be accompanied by one of the following:

(1) the Certification by Insurance Broker or Agent on the following page setting forth the required information and signatures;

-- OR --

(2) copies of all policies as certified by an authorized representative of the issuing insurance carrier that are referenced in such certificate of insurance. If any policy is not available at the time of submission, certified binders may be submitted until such time as the policy is available, at which time a certified copy of the policy shall be submitted.

CITY OF NEW YORK

CERTIFICATION BY INSURANCE BROKER OR AGENT

The undersigned insurance broker represents to the City of New York that the attached Certificate of Insurance is accurate in all material respects.

_____
[Name of broker or agent (typewritten)]

_____
[Address of broker or agent (typewritten)]

_____
[Email address of broker or agent (typewritten)]

_____
[Phone number/Fax number of broker or agent (typewritten)]

_____
[Signature of authorized official, broker, or agent]

_____
[Name and title of authorized official, broker, or agent (typewritten)]

State of …….)
) ss.:
County of ……)

Sworn to before me this _____ day of _____, 20____

_____
NOTARY PUBLIC FOR THE STATE OF _____

SCHEDULE A

(GENERAL CONDITIONS TO CONSTRUCTION CONTRACT)

PART IV. ADDRESS OF COMMISSIONER

Wherever reference is made in Article 7 or Article 22 to documents to be sent to the **Commissioner** (e.g., notices, filings, or submissions), such documents shall be sent to the address set forth below or, in the absence of such address, to the **Commissioner's** address as provided elsewhere in this **Contract**.

DDC Director, Insurance Risk Manager

30 – 30 Thomson Avenue, 4th Floor (IDCNY Building)

Long Island City, NY 11101

(NO FURTHER TEXT ON THIS PAGE)

C. DRAWINGS

Contract Drawings

DWG NO.	SHEET TITLE
G001	TITLE SHEET
G002	KEY MAP SHEET 1 OF 2
G003	KEY MAP SHEET 2 OF 2
G004	TABLE OF CONTENTS SHEET 1 OF 1
G005	TABLE OF CONTENTS SHEET 2 OF 2
G006	TABLE OF CONTENTS SHEET 3 OF 3
G007	TABLE OF CONTENTS SHEET 4 OF 4
G008	LEGENDS AND ABBREVIATIONS SHEET 1 OF 2
G009	LEGENDS AND ABBREVIATIONS SHEET 2 OF 2
G010	GENERAL NOTES SHEET 1 OF 3
G011	GENERAL NOTES SHEET 2 OF 3
G012	GENERAL NOTES SHEET 3 OF 3
G013	RECORD OF BORINGS SCHEDULE
G014	RECORD OF BORINGS LOCATION PLAN M-22 & M-23
G015	RECORD OF BORINGS LOCATION PLAN M-28
G016	RECORD OF BORINGS LOCATION PLAN M-31
G017	RECORD OF BORINGS LOCATION PLAN M-37 & M-38
G018	RECORD OF BORINGS LOCATION PLAN M-38A & M-38B
ESC001	EROSION AND SEDIMENT CONTROL - KEY MAP
ESC002	EROSION AND SEDIMENT CONTROL GENERAL NOTES
ESC101	EROSION AND SEDIMENT CONTROL - SOUTH INTERCEPTOR GATE
ESC102	EROSION AND SEDIMENT CONTROL - NORTH INTERCEPTOR GATE
ESC103	EROSION AND SEDIMENT CONTROL PLANS - M-22 & M23 (GOUVERNEUR SLIP EAST)
ESC104	EROSION AND SEDIMENT CONTROL PLANS - M-22 & M23 (WATER STREET)
ESC105	EROSION AND SEDIMENT CONTROL PLANS - M-22 & M23 (JACKSON STREET) & SOUTH INTERCEPTOR GATE
ESC106	EROSION AND SEDIMENT CONTROL PLANS - M-27 (1)
ESC107	EROSION AND SEDIMENT CONTROL PLANS - M-27 (2)
ESC108	EROSION AND SEDIMENT CONTROL PLANS - M-28
ESC109	EROSION AND SEDIMENT CONTROL PLANS - M-31

DWG NO.	SHEET TITLE
ESC110	EROSION AND SEDIMENT CONTROL PLANS - M-37 & M-38
ESC111	EROSION AND SEDIMENT CONTROL PLANS - M-38 & M-38A
ESC112	EROSION AND SEDIMENT CONTROL PLANS - M-38B & M-39
ESC201	EROSION AND SEDIMENT CONTROL DETAILS
ESC202	EROSION AND SEDIMENT CONTROL DETAILS
PD000	PARK DEMOLITION TABLE OF CONTENTS
PDT120	PARALLEL CONVEYANCE - TREE REMOVALS AND PROTECTION PLAN
PDT121	PARALLEL CONVEYANCE - TREE REMOVALS AND PROTECTION PLAN
PDT122	PARALLEL CONVEYANCE - TREE REMOVALS AND PROTECTION PLAN
PDT123	PARALLEL CONVEYANCE - TREE REMOVALS AND PROTECTION PLAN
LP080	PARALLEL CONVEYANCE - PLANTING SCHEDULE
LP322	PARALLEL CONVEYANCE - PLANTING PLAN
LP323	PARALLEL CONVEYANCE - PLANTING PLAN
LT001	TREE MITIGATION SCHEDULE SHEET 1 OF 13
LT002	TREE MITIGATION SCHEDULE SHEET 2 OF 13
LT003	TREE MITIGATION SCHEDULE SHEET 3 OF 13
LT004	TREE MITIGATION SCHEDULE SHEET 4 OF 13
LT005	TREE MITIGATION SCHEDULE SHEET 5 OF 13
LT006	TREE MITIGATION SCHEDULE SHEET 6 OF 13
LT007	TREE MITIGATION SCHEDULE SHEET 7 OF 13
LT008	TREE MITIGATION SCHEDULE SHEET 8 OF 13
LT009	TREE MITIGATION SCHEDULE SHEET 9 OF 13
LT010	TREE MITIGATION SCHEDULE SHEET 10 OF 13
LT011	TREE MITIGATION SCHEDULE SHEET 11 OF 13
LT012	TREE MITIGATION SCHEDULE SHEET 12 OF 13
LT013	TREE MITIGATION SCHEDULE SHEET 13 OF 13
LD001	DETAIL NOTES
SL350	STREET LIGHTING PLAN M-22 & M-23 SHEET 1 OF 2
SL351	STREET LIGHTING PLAN M-22 & M-23 SHEET 2 OF 2
SL352	STREET LIGHTING PLAN M-27
SL353	STREET LIGHTING PLAN M-28
SL354	STREET LIGHTING PLAN M-31

DWG NO.	SHEET TITLE
SL355	STREET LIGHTING PLAN M-37 & M-38
SL356	STREET LIGHTING PLAN M-38A & M38B
SL700	STREET LIGHTING PLAN DETAILS
TS300	TRAFFIC SIGNAL PLAN EAST 20TH STREET & AVENUE C
TS301	TRAFFIC SIGNAL PLAN EAST HOUSTON STREET & COLUMBIA STREET
TS302	EAST 20TH STREET & AVENUE C - TIMINGS
TS303	EAST HOUSTON STREET & COLUMBIA STREET - TIMINGS
TS304	TEMPORARY TRAFFIC SIGNAL PLAN EAST 20TH STREET & AVENUE C
TS305	TEMPORARY TRAFFIC SIGNAL PLAN EAST 23RD STREET & AVENUE C
TS306	TEMPORARY TRAFFIC SIGNAL PLAN GAS STATION EXIT
TC000	MPT TABLE OF CONTENTS
TC300	MPT GENERAL NOTES, LEGEND, AND ABBREVIATIONS
TC301	PROJECT GENERAL CONSTRUCTION PLAN
TC302	EMERGENCY EGRESS PLAN
TC303	TEMPORARY SIGN TABLE
TC304	MPT PROTECTION DEVICES
TC305	TYPICAL APPLICATIONS - UTILITY INSTALLATIONS
TC306	TYPICAL APPLICATIONS - SEWER CONSTRUCTION
TC307	TYPICAL APPLICATIONS - CURB AND SIDEWALK RECONSTRUCTION
TC308	TYPICAL APPLICATIONS - ROADWAY PAVEMENT RECONSTRUCTION
TC309	FDR DRIVE - MOVEABLE BARRIER DEPLOYMENT PLAN
TC310	FDR DRIVE - MOVEABLE BARRIER DEPLOYMENT SECTION
TC311	MPT PLAN S.I.G. SITE PREPARATION
TC312	MPT PLAN S.I.G. SUPPORT OF EXCAVATION (EAST PORTION) CONSTRUCTION
TC313	MPT PLAN S.I.G. SUPPORT OF EXCAVATION (WEST PORTION) AND CHAMBER CONSTRUCTION
TC314	MPT PLAN S.I.G. SEWER AND BUILDING CONSTRUCTION
TC315	MPT PLAN S.I.G. WATERMAIN RELOCATION
TC316	MPT PLAN S.I.G. FDR DRIVE SOUTHBOUND BARRIER RECONSTRUCTION
TC317	MPT PLAN S.I.G. SITE RECONSTRUCTION

DWG NO.	SHEET TITLE
TC320	MPT PLAN REGULATORS M-22 AND M-23 JACKSON STREET STAGE 1
TC321	MPT PLAN REGULATORS M-22 AND M-23 JACKSON STREET STAGE 2
TC322	MPT PLAN REGULATORS M-22 AND M-23 JACKSON STREET STAGE 3
TC323	MPT PLAN REGULATORS M-22 AND M-23 JACKSON STREET STAGE 4
TC324	MPT PLAN REGULATORS M-22 AND M-23 WATER STREET STAGE 1
TC325	MPT PLAN REGULATORS M-22 AND M-23 WATER STREET STAGE 2
TC326	MPT PLAN REGULATORS M-22 AND M-23 WATER STREET STAGE 3
TC327	MPT PLAN REGULATORS M-22 AND M-23 GOUVERNEUR SLIP EAST STAGE 1
TC328	MPT PLAN REGULATORS M-22 AND M-23 GOUVERNEUR SLIP EAST STAGE 2
TC328A	MPT PLAN REGULATORS M-22 AND M-23 GOUVERNEUR SLIP EAST STAGE 3
TC328b	MPT PLAN REGULATORS M-22 AND M-23 GOUVERNEUR SLIP EAST STAGE 4
TC330	MPT PLAN JACKSON STREET RECONSTRUCTION STAGE 1
TC331	MPT PLAN JACKSON STREET RECONSTRUCTION STAGE 2
TC332	MPT PLAN JACKSON STREET RECONSTRUCTION STAGE 3
TC333	MPT PLAN JACKSON STREET RECONSTRUCTION STAGE 4
TC334	MPT PLAN JACKSON STREET RECONSTRUCTION STAGE 5
TC335	MPT PLAN WATER STREET RECONSTRUCTION STAGE 1
TC336	MPT PLAN WATER STREET RECONSTRUCTION STAGE 2
TC337	MPT PLAN WATER STREET RECONSTRUCTION STAGE 3
TC338	MPT PLAN GOUVERNEUR SLIP EAST STREET RECONSTRUCTION STAGE 1
TC339	MPT PLAN GOUVERNEUR SLIP EAST STREET RECONSTRUCTION STAGE 2
TC340	MPT PLAN REGULATOR M-27 AND STREET RECONSTRUCTION STAGE 1
TC341	MPT PLAN REGULATOR M-27 AND STREET RECONSTRUCTION STAGE 2
TC342	MPT PLAN REGULATOR M-27 AND STREET RECONSTRUCTION STAGE 3
TC343	MPT PLAN REGULATOR M-27 AND STREET RECONSTRUCTION STAGE 4

DWG NO.	SHEET TITLE
TC344	MPT PLAN REGULATOR M-27 AND STREET RECONSTRUCTION STAGE 5
TC350	MPT PLAN REGULATOR M-28 DELANCEY STREET NORTH STAGE 1
TC351	MPT PLAN REGULATOR M-28 DELANCEY STREET NORTH STAGE 2
TC352	MPT PLAN REGULATOR M-28 DELANCEY STREET NORTH STAGE 3
TC353	MPT PLAN REGULATOR M-28 DELANCEY STREET NORTH STAGE 4
TC354	MPT PLAN NOT IN USE
TC355	MPT PLAN DELANCEY STREET NORTH STREET RECONSTRUCTION STAGE 1
TC356	MPT PLAN DELANCEY STREET NORTH STREET RECONSTRUCTION STAGE 2
TC357	MPT PLAN DELANCEY STREET NORTH STREET RECONSTRUCTION STAGE 3
TC358	MPT PLAN DELANCEY STREET NORTH STREET RECONSTRUCTION STAGE 4
TC359	MPT PLAN DELANCEY STREET NORTH STREET RECONSTRUCTION STAGE 5
TC360	MPT PLAN REGULATOR M-37 EAST 18TH STREET STAGE 1
TC361	MPT PLAN REGULATOR M-37 EAST 18TH STREET STAGE 2
TC362	MPT PLAN REGULATOR M-37 EAST 18TH STREET STAGE 3
TC363	MPT PLAN REGULATOR M-37 EAST 18TH STREET STAGE 4
TC364	MPT PLAN MPT PLAN EAST HOUSTON STREET RECONSTRUCTION STAGE 1
TC365	MPT PLAN MPT PLAN EAST HOUSTON STREET RECONSTRUCTION STAGE 2
TC366	MPT PLAN MPT PLAN EAST HOUSTON STREET RECONSTRUCTION STAGE 3
TC367	MPT PLAN MPT PLAN EAST HOUSTON STREET RECONSTRUCTION STAGE 4
TC368	MPT PLAN MPT PLAN EAST HOUSTON STREET RECONSTRUCTION STAGE 5
TC369	MPT PLAN MPT PLAN EAST HOUSTON STREET RECONSTRUCTION STAGE 6
TC370	MPT PLAN MPT PLAN EAST HOUSTON STREET RECONSTRUCTION STAGE 7
TC371	MPT PLAN REGULATOR M-37 EAST 18TH STREET STAGE 1
TC372	MPT PLAN REGULATOR M-37 EAST 18TH STREET STAGE 2
TC373	MPT PLAN REGULATOR M-37 EAST 18TH STREET STAGE 3
TC374	MPT PLAN REGULATOR M-37 EAST 18TH STREET STAGE 4

DWG NO.	SHEET TITLE
TC375	MPT PLAN AVENUE C AND EAST 18TH STREET RECONSTRUCTION STAGE 1
TC376	MPT PLAN AVENUE C AND EAST 18TH STREET RECONSTRUCTION STAGE 2
TC380	MPT PLAN N.I.G. STORM SEWER RELOCATION
TC381	MPT PLAN N.I.G. 20" WATER MAIN RELOCATION
TC382	MPT PLAN N.I.G. CHAMBER CONSTRUCTION
TC383	MPT PLAN REGULATOR M-38 EAST 20TH STREET STAGE 1
TC384	MPT PLAN REGULATOR M-38 EAST 20TH STREET STAGE 2
TC385	MPT PLAN N.I.G. BUILIDING CONSTRUCTION
TC386	MPT PLAN NOT IN USE
TC387	MPT PLAN NOT IN USE
TC388	MPT PLAN NOT IN USE
TC389	MPT PLAN NOT IN USE
TC390	MPT PLAN REGULATORS M-38, M-38A AND M-38BAVENUE C STAGE 1
TC391	MPT PLAN REGULATORS M-38, M-38A AND M-38BAVENUE C STAGE 2
TC392	MPT PLAN REGULATORS M-38, M-38A AND M-38BAVENUE C STAGE 3
TC393	MPT PLAN NOT IN USE
TC394	MPT PLAN REGULATOR M-38B EAST 23RD STREET STAGE 1
TC395	MPT PLAN REGULATOR M-38B EAST 23RD STREET STAGE 2
TC400	MPT PLAN REGULATOR M-39 IN ASSER LEVY PARK
TC401	MPT PLAN EAST 20TH STREET RECONSTRUCTION STAGE 1
TC402	MPT PLAN EAST 20TH STREET RECONSTRUCTION STAGE 2
TC403	MPT PLAN EAST 20TH STREET RECONSTRUCTION STAGE 3
TC404	MPT PLAN EAST 20TH STREET RECONSTRUCTION STAGE 4
TC405	MPT PLAN EAST 20TH STREET RECONSTRUCTION STAGE 5
TC406	MPT PLAN EAST 20TH STREET RECONSTRUCTION STAGE 6
TC410	MPT PLAN AVENUE C RECONSTRUCTION STAGE 1
TC411	MPT PLAN AVENUE C RECONSTRUCTION STAGE 2
TC412	MPT PLAN AVENUE C RECONSTRUCTION STAGE 3
TC413	MPT PLAN AVENUE C RECONSTRUCTION STAGE 4
TC414	MPT PLAN NOT IN USE
TC415	MPT PLAN NOT IN USE
TC416	MPT PLAN NOT IN USE

DWG NO.	SHEET TITLE
TC417	MPT PLAN NOT IN USE
TC418	MPT PLAN NOT IN USE
TC419	MPT PLAN NOT IN USE
TC420	MPT PLAN EAST 23RD STREET RECONSTRUCTION STAGE 1
TC421	MPT PLAN EAST 23RD STREET RECONSTRUCTION STAGE 2
TC422	MPT PLAN EAST 23RD STREET RECONSTRUCTION STAGE 3
TC423	MPT PLAN EAST 23RD STREET RECONSTRUCTION STAGE 4
TC424	MPT PLAN EAST 23RD STREET RECONSTRUCTION STAGE 5
TC425	MPT PLAN NOT IN USE
TC450	DETOUR PLAN JACKSON STREET
TC451	DETOUR PLAN WATER STREET
TC452	DETOUR PLAN GOVERNEUR SLIP EAST
TC453	DETOUR PLAN BARUCH DRIVE
TC454	DETOUR PLAN EAST 20TH STREET SERVICE ROAD
TC455	DETOUR PLAN NOT IN USE
T-700.00	COVER SHEET SOUTH INTERCEPTOR GATE BUILDING
A-700.00	SOUTH INTERCEPTOR GATE BUILDING GENERAL NOTES, SYMBOLS, AND ABBREVIATIONS
A-701.00	SOUTH INTERCEPTOR GATE BUILDING CODE & SITE INFORMATION
A-702.00	SOUTH INTERCEPTOR GATE BUILDING FLOOD ZONE INFORMATION
A-705.00	SOUTH INTERCEPTOR GATE BUILDING SCHEDULES
A-710.00	SOUTH INTERCEPTOR GATE BUILDING ARCHITECTURAL SITE PLAN
A-711.00	SOUTH INTERCEPTOR GATE BUILDING FLOOR & CLERESTORY PLANS
A-712.00	SOUTH INTERCEPTOR GATE BUILDING RCP & ROOF PLANS
A-721.00	SOUTH INTERCEPTOR GATE BUILDING EXTERIOR ELEVATIONS 1 OF 2
A-722.00	SOUTH INTERCEPTOR GATE BUILDING EXTERIOR ELEVATIONS 2 OF 2
A-723.00	SOUTH INTERCEPTOR GATE BUILDING BACK-UP WALL ELEVATIONS 1 OF 2
A-724.00	SOUTH INTERCEPTOR GATE BUILDING BACK-UP WALL ELEVATIONS 2 OF 2
A-731.00	SOUTH INTERCEPTOR GATE BUILDING LONGITUDINAL SECTIONS
A-732.00	SOUTH INTERCEPTOR GATE BUILDING CROSS SECTONS

DWG NO.	SHEET TITLE
A-751.00	SOUTH INTERCEPTOR GATE BUILDING ENLARGED PLANS & SECTIONS - NORTH & SOUTH FACADES
A-752.00	SOUTH INTERCEPTOR GATE BUILDING ENLARGED PLANS & SECTIONS - EAST FACADE
A-753.00	SOUTH INTERCEPTOR GATE BUILDING ENLARGED PLANS & SECTIONS - WEST FACADE
A-761.00	SOUTH INTERCEPTOR GATE BUILDING TYPICAL ASSEMBLIES & INTERIOR DETAILS
A-762.00	SOUTH INTERCEPTOR GATE BUILDING NORTH & SOUTH FACADE PLAN DTLS
A-763.00	SOUTH INTERCEPTOR GATE BUILDING NORTH & SOUTH FACADE SECT. DTLS
A-764.00	SOUTH INTERCEPTOR GATE BUILDING EAST FACADE PLAN DTLS
A-765.00	SOUTH INTERCEPTOR GATE BUILDING EAST FACADE SECT. DTLS
A-766.00	SOUTH INTERCEPTOR GATE BUILDING WEST FACADE PLAN DTLS
A-767.00	SOUTH INTERCEPTOR GATE BUILDING WEST FACADE SECT. DTLS
A-768.00	SOUTH INTERCEPTOR GATE BUILDING ROOF DETAILS 1 OF 2
A-769.00	SOUTH INTERCEPTOR GATE BUILDING ROOF DETAILS 2 OF 2
A-770.00	SOUTH INTERCEPTOR GATE BUILDING FLOOD BARRIER DETAILS
E-700.00	SOUTHERN INTERCEPTOR GATE HOUSE ELECTRICAL GENERAL NOTES, LEGEND AND ABBREVIATIONS
E-701.00	SOUTHERN INTERCEPTOR GATE HOUSE BUILDING ELECTRICAL SITE PLAN
E-702.00	SOUTHERN INTERCEPTOR GATE HOUSE BUILDING ELECTRICAL POWER PLAN
E-703.00	SOUTHERN INTERCEPTOR GATE HOUSE BUILDING ELECTRICAL LIGHTING PLAN
E-704.00	SOUTHERN INTERCEPTOR GATE HOUSE BUILDING ROOF LIGHTNING AND GROUNDING PLANS
E-705.00	SOUTHERN INTERCEPTOR GATE HOUSE BUILDING ELECTRICAL ONE-LINE DIAGRAM AND PANEL SCHEDULES
E-706.00	PORTABLE GENERATOR CONNECTOR BOX DETAIL
EN-701.00	SOUTHERN INTERCEPTOR GATE HOUSE NYCECC COMPLIANCE LIGHTING AND MECHANICAL
EN-702.00	SOUTH INTERCEPTOR GATE BUILDING ECC ANALYSIS - ENVELOPE
S-700.00	SOUTH INTERCEPTOR GATE BUILDING STRUCTURAL GENERAL NOTES, LEGENDS & ABBREVIATIONS 1 OF 2

DWG NO.	SHEET TITLE
S-701.00	SOUTH INTERCEPTOR GATE BUILDING STRUCTURAL GENERAL NOTES, LEGENDS & ABBREVIATIONS 2 OF 2
S-702.00	SOUTH INTERCEPTOR GATE BUILDING SITE PLAN AND LAYOUT
S-703.00	SOUTH INTERCEPTOR GATE BUILDING FOUNDATION PLAN
S-704.00	SOUTH INTERCEPTOR GATE BUILDING FLOOR PLAN & DETAILS
S-705.00	SOUTH INTERCEPTOR GATE BUILDING FLOOR SLAB & DETAILS
S-706.00	SOUTH INTERCEPTOR GATE BUILDING ROOF FRAMING PLAN & DETAILS
S-707.00	SOUTH INTERCEPTOR GATE BUILDING FOUNDATION SECTIONS 1 OF 2
S-708.00	SOUTH INTERCEPTOR GATE BUILDING FOUNDATION SECTIONS 2 OF 2
S-709.00	SOUTH INTERCEPTOR GATE BUILDING STRUCTURAL DETAILS 1 OF 2
S-710.00	SOUTH INTERCEPTOR GATE BUILDING STRUCTURAL DETAILS 2 OF 2
P-700.00	SOUTHERN INTERCEPTOR GATE HOUSE PLUMBING GENERAL NOTES, LEGEND AND ABBREVIATIONS
P-701.00	SOUTHERN INTERCEPTOR GATE HOUSE PLUMBING SITE PLAN
P-702.00	SOUTHERN INTERCEPTOR GATE HOUSE BUILDING PLUMBING PLAN
P-703.00	SOUTHERN INTERCEPTOR GATE HOUSE BUILDING DRAINAGE PLAN
P-704.00	SOUTHERN INTERCEPTOR GATE HOUSE BUILDING DETAILS SHEET NO. 1
M-700.00	SOUTHERN INTERCEPTOR GATE HOUSE MECHANICAL GENERAL NOTES, LEGEND AND ABBREVIATIONS - 1
M-701.00	SOUTHERN INTERCEPTOR GATE HOUSE MECHANICAL GENERAL NOTES, LEGEND AND ABBREVIATIONS - 2
M-702.00	SOUTHERN INTERCEPTOR GATE HOUSE BUILDING MECHANICAL PLAN
M-703.00	SOUTHERN INTERCEPTOR GATE HOUSE BUILDING EQUIPMENT SCHEDULE
T-800.00	COVER SHEET NORTH INTERCEPTOR GATE BUILDING
A-800.00	NORTH INTERCEPTOR GATE BUILDING GENERAL NOTES, SYMBOLS, AND ABBREVIATIONS
A-801.00	NORTH INTERCEPTOR GATE BUILDING CODE & SITE INFORMATION
A-802.00	NORTH INTERCEPTOR GATE BUILDING FLOOD ZONE INFORMATION

DWG NO.	SHEET TITLE
A-805.00	NORTH INTERCEPTOR GATE BUILDING SCHEDULES
A-810.00	NORTH INTERCEPTOR GATE BUILDING ARCHITECTURAL SITE PLAN
A-811.00	NORTH INTERCEPTOR GATE BUILDING FLOOR & CLERESTORY PLANS
A-812.00	NORTH INTERCEPTOR GATE BUILDING RCP & ROOF PLANS
A-821.00	NORTH INTERCEPTOR GATE BUILDING EXTERIOR ELEVATIONS 1 OF 2
A-822.00	NORTH INTERCEPTOR GATE BUILDING EXTERIOR ELEVATIONS 2 OF 2
A-823.00	NORTH INTERCEPTOR GATE BUILDING BACK-UP WALL ELEVATIONS 1 OF 2
A-824.00	NORTH INTERCEPTOR GATE BUILDING BACK-UP WALL ELEVATIONS 2 OF 2
A-831.00	NORTH INTERCEPTOR GATE BUILDING LONGITUDINAL SECTIONS
A-832.00	NORTH INTERCEPTOR GATE BUILDING CROSS SECTONS
A-851.00	NORTH INTERCEPTOR GATE BUILDING ENLARGED PLANS & SECTIONS - NORTH & SOUTH FACADES
A-852.00	NORTH INTERCEPTOR GATE BUILDING ENLARGED PLANS & SECTIONS - EAST FACADE
A-853.00	NORTH INTERCEPTOR GATE BUILDING ENLARGED PLANS & SECTIONS - WEST FACADE
A-861.00	NORTH INTERCEPTOR GATE BUILDING TYPICAL ASSEMBLIES & INTERIOR DETAILS
A-862.00	NORTH INTERCEPTOR GATE BUILDING NORTH & SOUTH FACADE PLAN DTLS
A-863.00	NORTH INTERCEPTOR GATE BUILDING NORTH & SOUTH FACADE SECT. DTLS
A-864.00	NORTH INTERCEPTOR GATE BUILDING EAST FACADE PLAN DTLS
A-865.00	NORTH INTERCEPTOR GATE BUILDING EAST FACADE SECT. DTLS
A-866.00	NORTH INTERCEPTOR GATE BUILDING WEST FACADE PLAN DTLS
A-867.00	NORTH INTERCEPTOR GATE BUILDING WEST FACADE SECT. DTLS
A-868.00	NORTH INTERCEPTOR GATE BUILDING ROOF DETAILS 1 OF 2
A-869.00	NORTH INTERCEPTOR GATE BUILDING ROOF DETAILS 2 OF 2
A-870.00	NORTH INTERCEPTOR GATE BUILDING FLOOD BARRIER DETAILS
E-800.00	NORTHERN INTERCEPTOR GATE HOUSE ELECTRICAL GENERAL NOTES, LEGEND AND ABBREVIATIONS

DWG NO.	SHEET TITLE
E-801.00	NORTHERN INTERCEPTOR GATE HOUSE BUILDING ELECTRICAL SITE PLAN
E-802.00	NORTHERN INTERCEPTOR GATE HOUSE BUILDING ELECTRICAL POWER PLAN
E-803.00	NORTHERN INTERCEPTOR GATE HOUSE BUILDING ELECTRICAL LIGHTING PLAN
E-804.00	NORTHERN INTERCEPTOR GATE HOUSE BUILDING ROOF LIGHTNING AND GROUNDING PLANS
E-805.00	NORTHERN INTERCEPTOR GATE HOUSE BUILDING ELECTRICAL ONE-LINE DIAGRAM AND PANEL SCHEDULES
EN-801.00	NORTHERN INTERCEPTOR GATE HOUSE NYCECC COMPLIANCE LIGHTING AND MECHANICAL
EN-802.00	NORTH INTERCEPTOR GATE BUILDING ECC ANALYSIS - ENVELOPE
S-800.00	NORTH INTERCEPTOR GATE BUILDING STRUCTURAL GENERAL NOTES, LEGENDS & ABBREVIATIONS SHEET 1 OF 2
S-801.00	NORTH INTERCEPTOR GATE BUILDING STRUCTURAL GENERAL NOTES, LEGENDS & ABBREVIATIONS SHEET 2 OF 2
S-802.00	NORTH INTERCEPTOR GATE BUILDING SITE PLAN AND LAYOUT
S-803.00	NORTH INTERCEPTOR GATE BUILDING FOUNDATION PLAN
S-804.00	NORTH INTERCEPTOR GATE BUILDING FLOOR PLAN
S-805.00	NORTH INTERCEPTOR GATE BUILDING FLOOR SLAB DETAILS
S-806.00	NORTH INTERCEPTOR GATE BUILDING ROOF & DETAILS
S-807.00	NORTH INTERCEPTOR GATE BUILDING FOUNDATION SECTIONS SHEET 1 OF 2
S-808.00	NORTH INTERCEPTOR GATE BUILDING FOUNDATION SECTIONS SHEET 2 OF 2
S-809.00	NORTH INTERCEPTOR GATE BUILDING STRUCTURAL DETAILS SHEET 1 OF 2
S-810.00	NORTH INTERCEPTOR GATE BUILDING STRUCTURAL DETAILS SHEET 2 OF 2
P-800.00	NORTHERN INTERCEPTOR GATE HOUSE PLUMBING GENERAL NOTES, LEGEND AND ABBREVIATIONS
P-801.00	NORTHERN INTERCEPTOR GATE HOUSE BUILDING PLUMBING SITE PLAN
P-802.00	NORTHERN INTERCEPTOR GATE HOUSE BUILDING PLUMBING PLAN
P-803.00	NORTHERN INTERCEPTOR GATE HOUSE BUILDING DRAINAGE PLAN

DWG NO.	SHEET TITLE
P-804.00	NORTHERN INTERCEPTOR GATE HOUSE BUILDING DETAILS SHEET NO. 1
M-800.00	NORTHERN INTERCEPTOR GATE HOUSE MECHANICAL GENERAL NOTES, LEGEND AND ABBREVIATIONS - 1
M-801.00	NORTHERN INTERCEPTOR GATE HOUSE MECHANICAL GENERAL NOTES, LEGEND AND ABBREVIATIONS - 2
M-802.00	NORTHERN INTERCEPTOR GATE HOUSE BUILDING MECHANICAL PLAN
M-803.00	NORTHERN INTERCEPTOR GATE HOUSE BUILDING EQUIPMENT SCHEDULE
IG000	INTERCEPTOR GATE TABLE OF CONTENTS
IGM001	INTERCEPTOR GATES - MECHANICAL NOTES & LEGEND
IGM100	NORTHERN INTERCEPTOR GATE - ISOMETRIC
IGM105	SOUTHERN INTERCEPTOR GATE - ISOMETRIC
IGM400	NORTHERN INTERCEPTOR GATE - MECHANICAL CHAMBER PLANS
IGM600	NORTHERN INTERCEPTOR GATE - MECHANICAL CHAMBER SECTIONS SHEET 1 OF 2
IGM601	NORTHERN INTERCEPTOR GATE - MECHANICAL CHAMBER SECTIONS SHEET 2 OF 2
IGM410	NORTHERN INTERCEPTOR GATE - MECHANICAL BUILDING PLAN
IGM610	NORTHERN INTERCEPTOR GATE - MECHANICAL BUILDING SECTIONS
IGM405	SOUTHERN INTERCEPTOR GATE - MECHANICAL CHAMBER PLANS
IGM605	SOUTHERN INTERCEPTOR GATE - MECHANICAL CHAMBER SECTIONS SHEET 1 OF 2
IGM606	SOUTHERN INTERCEPTOR GATE - MECHANICAL CHAMBER SECTIONS SHEET 2 OF 2
IGM415	SOUTHERN INTERCEPTOR GATE - MECHANICAL BUILDING PLAN
IGM615	SOUTHERN INTERCEPTOR GATE - MECHANICAL BUILDING SECTIONS
IGM700	INTERCEPTOR GATES - MECHANICAL DETAILS SHEET 1 OF 3
IGM701	INTERCEPTOR GATES - MECHANICAL DETAILS SHEET 2 OF 3
IGM702	INTERCEPTOR GATES - MECHANICAL DETAILS SHEET 2 OF 3
IGM703	INTERCEPTOR GATES - HYDRAULIC SYSTEM ONE-LINE DIAGRAM
IGI001	INTERCEPTOR GATES - INSTRUMENTATION NOTES & LEGEND
IGI100	INTERCEPTOR GATES - INSTRUMENTATION SCHEMATIC
IGI101	NORTHERN INTERCEPTOR GATE - INSTRUMENTATION SCHEMATIC

DWG NO.	SHEET TITLE
IGI102	SOUTHERN INTERCEPTOR GATE - INSTRUMENTATION SCHEMATIC
IGE100	INTERCEPTOR GATES - GENERAL NOTES AND SYMBOLS/CABLE AND CONDUIT SCHEDULE
IGE101	NORTHERN INTERCEPTOR GATE - CHAMBER ELECTRICAL CONDUIT LAYOUT SHEET 1 OF 2
IGE102	NORTHERN INTERCEPTOR GATE - CHAMBER ELECTRICAL CONDUIT LAYOUT SHEET 2 OF 2
IGE103	NORTHERN INTERCEPTOR GATE - BUILDING ELECTRICAL LAYOUT SHEET 1 OF 2
IGE104	NORTHERN INTERCEPTOR GATE - BUILDING ELECTRICAL LAYOUT SHEET 2 OF 2
IGE105	NORTHERN INTERCEPTOR GATE - BUILDING RISER DIAGRAM
IGE106	SOUTHERN INTERCEPTOR GATE - CHAMBER ELECTRICAL CONDUIT LAYOUT SHEET 1 OF 2
IGE107	SOUTHERN INTERCEPTOR GATE - CHAMBER ELECTRICAL CONDUIT LAYOUT SHEET 2 OF 2
IGE108	SOUTHERN INTERCEPTOR GATE - BUILDING ELECTRICAL LAYOUT SHEET 1 OF 2
IGE109	SOUTHERN INTERCEPTOR GATE - BUILDING ELECTRICAL LAYOUT SHEET 2 OF 2
IGE110	SOUTHERN INTERCEPTOR GATE - BUILDING RISER DIAGRAM
IGC300	INTERCEPTOR GATES - CIVIL PROCESS PIPING ROUTING & DETAILS
S001	STRUCTURAL GENERAL NOTES SHEET 1 OF 2
S002	STRUCTURAL GENERAL NOTES SHEET 2 OF 2
IGS100	NORTHERN INTERCEPTOR GATE - NOTES AND SEQUENCING
IGS400	NORTHERN INTERCEPTOR GATE - STRUCTURAL PLANS SHEET 1 OF 2
IGS401	NORTHERN INTERCEPTOR GATE - STRUCTURAL PLANS SHEET 2 OF 2
IGS600	NORTHERN INTERCEPTOR GATE - STRUCTURAL SECTIONS SHEET 1 OF 2
IGS601	NORTHERN INTERCEPTOR GATE - STRUCTURAL SECTIONS SHEET 2 OF 2
IGS700	NORTHERN INTERCEPTOR GATE - STRUCTURAL SECTIONS AND DETAILS SHEET 1 OF 2
IGS701	NORTHERN INTERCEPTOR GATE - STRUCTURAL SECTIONS AND DETAILS SHEET 2 OF 2
IGS702	NORTHERN INTERCEPTOR GATE - STRUCTURAL DETAILS

DWG NO.	SHEET TITLE
IGS105	SOUTHERN INTERCEPTOR GATE - NOTES AND SEQUENCING
IGS405	SOUTHERN INTERCEPTOR GATE - STRUCTURAL PLANS SHEET 1 OF 2
IGS406	SOUTHERN INTERCEPTOR GATE - STRUCTURAL PLANS SHEET 2 OF 2
IGS605	SOUTHERN INTERCEPTOR GATE - STRUCTURAL SECTIONS SHEET 1 OF 2
IGS606	SOUTHERN INTERCEPTOR GATE - STRUCTURAL SECTIONS SHEET 2 OF 2
IGS705	SOUTHERN INTERCEPTOR GATE - STRUCTURAL SECTIONS AND DETAILS SHEET 1 OF 2
IGS706	SOUTHERN INTERCEPTOR GATE - STRUCTURAL SECTIONS AND DETAILS SHEET 2 OF 2
IGS707	SOUTHERN INTERCEPTOR GATE - STRUCTURAL DETAILS
S700	STRUCTURAL DETAILS SHEET 1 OF 3
S701	STRUCTURAL DETAILS SHEET 2 OF 3
S702	STRUCTURAL DETAILS SHEET 3 OF 3
SGC300	SOUTH INTERCEPTOR GATE BUILDING CORLEARS HOOK PARK SITE LAYOUT PLAN
SGC301	SOUTH INTERCEPTOR GATE BUILDING CORLEARS HOOK PARK SITE GRADING PLAN
SGC302	SOUTH INTERCEPTOR GATE BUILDING CORLEARS HOOK PARK PAVEMENT MARKING PLAN
SGC303	SOUTH INTERCEPTOR GATE BUILDING CORLEARS HOOK PARK SITE UTILITY PLAN & PROFILE
SGC304	SOUTH INTERCEPTOR GATE BUILDING CORLEARS HOOK PARK SITE DETAILS
SGC305	SOUTH INTERCEPTOR GATE BUILDING CORLEARS HOOK PARK SITE DETAILS
SGS800	SOUTH INTERCEPTOR GATE CHAMBER S.O.E. 1 OF 3
SGS801	SOUTH INTERCEPTOR GATE CHAMBER S.O.E. 2 OF 3
SGS802	SOUTH INTERCEPTOR GATE CHAMBER S.O.E. 3 OF 3
SGS803	SOUTH IG CHAMBER S.O.E. RECORD OF BORING SHEET 1 OF 2
SGS804	SOUTH IG CHAMBER S.O.E. RECORD OF BORING SHEET 2 OF 2
NGC300	NORTH INTERCEPTOR GATE BUILDING EAST 20TH STREET TYPICAL SECTIONS
NGC301	NORTH INTERCEPTOR GATE BUILDING EAST 20TH STREET TYPICAL SECTIONS

DWG NO.	SHEET TITLE
NGC302	NORTH INTERCEPTOR GATE BUILDING EAST 20TH STREET SITE LAYOUT PLAN
NGC303	NORTH INTERCEPTOR GATE BUILDING EAST 20TH STREET SITE GRADING PLAN
NGC304	NORTH INTERCEPTOR GATE BUILDING EAST 20TH STREET PROFILE
NGC305	NORTH INTERCEPTOR GATE BUILDING EAST 20TH STREET PAVEMENT MARKING PLAN
NGC306	NORTH INTERCEPTOR GATE BUILDING EAST 20TH STREET SITE UTILITY PLAN & PROFILE
NGC307	NORTH INTERCEPTOR GATE BUILDING EAST 20TH STREET SITE DETAILS
NGC308	NORTH INTERCEPTOR GATE BUILDING EAST 20TH STREET SITE DETAILS
NGS800	NORTH INTERCEPTOR GATE CHAMBER S.O.E. 1 OF 3
NGS801	NORTH INTERCEPTOR GATE CHAMBER S.O.E. 2 OF 3
NGS802	NORTH INTERCEPTOR GATE CHAMBER S.O.E. 3 OF 3
NGS803	NORTH IG CHAMBER S.O.E. RECORD OF BORING SHEET 1 OF 2
NGS804	NORTH IG CHAMBER S.O.E. RECORD OF BORING SHEET 2 OF 2
PC000	PARALLEL CONVEYANCE TABLE OF CONTENTS
PCC001	CIVIL GENERAL NOTES
PCC301	PARALLEL CONVEYANCE CIVIL PLAN & PROFILE REGULATORS M-22 & M-23 SHEET 1 OF 3
PCC302	PARALLEL CONVEYANCE CIVIL PLAN & PROFILE REGULATORS M-22 & M-23 SHEET 2 OF 3
PCC303	PARALLEL CONVEYANCE CIVIL PLAN & PROFILE REGULATORS M-22 & M-23 SHEET 3 OF 3
PCC304A	PARALLEL CONVEYANCE CIVIL PLAN & PROFILE REGULATOR M-27
PCC304	PARALLEL CONVEYANCE CIVIL PLAN & PROFILE REGULATOR M-28
PCC305	PARALLEL CONVEYANCE CIVIL PLAN & PROFILE REGULATOR M-31
PCC307	PARALLEL CONVEYANCE CIVIL PLAN & PROFILE REGULATORS M-37 & M-38
PCC308	PARALLEL CONVEYANCE CIVIL PLAN & PROFILE REGULATORS M-38 & M-38A
PCC309	PARALLEL CONVEYANCE CIVIL PLAN & PROFILE REGULATORS M-38B & M-39

DWG NO.	SHEET TITLE
PCH300	GOUVERNEUR SLIP E & WATER STREET & JACKSON STREET PARALLEL CONVEYANCE RECONSTRUCTION PLAN
PCH300A	GOUVERNEUR SLIP E & WATER STREET & JACKSON STREET WATERMAIN RELOCATION PLAN
PCH301	DELANCEY STREET N & BARUCH PLACE PARALLEL CONVEYANCE RECONSTRUCTION PLAN
PCH302	EAST HOUSTON STREET & COLUMBIA STREET PARALLEL CONVEYANCE RECONSTRUCTION PLAN
PCH303	AVENUE C & EAST 20TH STREET & EAST 23RD STREET PARALLEL CONVEYANCE RECONSTRUCTION PLAN
PCH304	GOUVERNEUR SLIP E & WATER STREET & JACKSON STREET PARALLEL CONVEYANCE GRADING PLAN
PCH305	DELANCEY STREET N & BARUCH PLACE PARALLEL CONVEYANCE GRADING PLAN
PCH306	EAST HOUSTON STREET & COLUMBIA STREET PARALLEL CONVEYANCE GRADING PLAN
PCH307	AVENUE C & EAST 20TH STREET & EAST 23RD STREET PARALLEL CONVEYANCE GRADING PLAN
PCH308	DETAILS PARALLEL CONVEYANCE PLAN
PCH311	PARALLEL CONVEYANCE HIGHWAY RECONSTRUCTION M-22 AND M-23 CONSTRUCTION PLAN
PCH312	PARALLEL CONVEYANCE HIGHWAY RECONSTRUCTION M-22 AND M-23 GRADING PLAN
PCH313	PARALLEL CONVEYANCE HIGHWAY RECONSTRUCTION M-22 AND M-23 PAVEMENT MARKINGS PLAN
PCH314	PARALLEL CONVEYANCE HIGHWAY RECONSTRUCTION M-22 AND M-23 GRADING DETAILS
PCH320	PARALLEL CONVEYANCE HIGHWAY RECONSTRUCTION M-27 PAVEMENT MARKING PLAN
PCH321	PARALLEL CONVEYANCE HIGHWAY RECONSTRUCTION M-28 CONSTRUCTION PLAN
PCH322	PARALLEL CONVEYANCE HIGHWAY RECONSTRUCTION M-28 GRADING PLAN
PCH323	PARALLEL CONVEYANCE HIGHWAY RECONSTRUCTION M-28 PAVEMENT MARKINGS PLAN
PCH324	PARALLEL CONVEYANCE HIGHWAY RECONSTRUCTION M-28 GRADING DETAILS
PCH331	PARALLEL CONVEYANCE HIGHWAY RECONSTRUCTION M-31 CONSTRUCTION PLAN

DWG NO.	SHEET TITLE
PCH332	PARALLEL CONVEYANCE HIGHWAY RECONSTRUCTION M-31 GRADING PLAN
PCH333	PARALLEL CONVEYANCE HIGHWAY RECONSTRUCTION M-31 PAVEMENT MARKINGS PLAN
PCH334	PARALLEL CONVEYANCE HIGHWAY RECONSTRUCTION M-31 GRADING DETAILS
PCH335	PARALLEL CONVEYANCE HIGHWAY RECONSTRUCTION M-37 CONSTRUCTION PLAN
PCH336	PARALLEL CONVEYANCE HIGHWAY RECONSTRUCTION M-37 GRADING PLAN
PCH337	PARALLEL CONVEYANCE HIGHWAY RECONSTRUCTION M-37 PAVEMENT MARKINGS PLAN
PCH341	PARALLEL CONVEYANCE HIGHWAY RECONSTRUCTION M-38 CONSTRUCTION PLAN
PCH342	PARALLEL CONVEYANCE HIGHWAY RECONSTRUCTION M-38 GRADING PLAN
PCH343	PARALLEL CONVEYANCE HIGHWAY RECONSTRUCTION M-38 PAVEMENT MARKINGS PLAN
PCH344	PARALLEL CONVEYANCE HIGHWAY RECONSTRUCTION M-38 GRADING DETAILS
PCH350	PARALLEL CONVEYANCE ADDITIONAL HIGHWAY RECONSTRUCTION IMPROVEMENTS SHEET 1 OF 5
PCH351	PARALLEL CONVEYANCE ADDITIONAL HIGHWAY RECONSTRUCTION IMPROVEMENTS SHEET 2 OF 5
PCH352	PARALLEL CONVEYANCE ADDITIONAL HIGHWAY RECONSTRUCTION IMPROVEMENTS SHEET 3 OF 5
PCH353	PARALLEL CONVEYANCE ADDITIONAL HIGHWAY RECONSTRUCTION IMPROVEMENTS SHEET 4 OF 5
PCH356	PARALLEL CONVEYANCE ADDITIONAL HIGHWAY RECONSTRUCTION IMPROVEMENTS SHEET 5 OF 5
SPL200	STUYVESANT COVE PARKING LOT UNDER ELEVATED FDR DRIVE TYPICAL SECTION
SPL313	STUYVESANT COVE PARKING LOT UNDER ELEVATED FDR DRIVE HIGHWAY CONSTRUCTION PLAN REACH N
SPL314	STUYVESANT COVE PARKING LOT UNDER ELEVATED FDR DRIVE HIGHWAY CONSTRUCTION PLAN REACH O
SPL351	STUYVESANT COVE PARKING LOT UNDER ELEVATED FDR DRIVE PEDESTRIAN PLAZA ENLARGEMENT
SPL352	STUYVESANT COVE PARKING LOT UNDER ELEVATED FDR DRIVE NORTHERN ENTRANCE ENLARGEMENT

DWG NO.	SHEET TITLE
SPL513	STUYVESANT COVE PARKING LOT UNDER ELEVATED FDR DRIVE PAVEMENT MARKING PLAN REACH N
SPL514	STUYVESANT COVE PARKING LOT UNDER ELEVATED FDR DRIVE PAVEMENT MARKING PLAN REACH O
LL051	SITE LAYOUT SCHEDULE
LL052	SITE LAYOUT SCHEDULE
LL579	LAYOUT ENLARGEMENT PLAN REACH N-2
LL581	LAYOUT ENLARGEMENT PLAN REACH N-O
LM313	MATERIALS PLAN SEGMENT 5 - REACH N
LM314	MATERIALS PLAN SEGMENT 5 - REACH O
LM551	PATH CONCRETE JOINING PLAN
LF313	FURNISHINGS PLAN
LD727	PAVING DETAILS
LD890	PARKS SECURITY DETAILS
PCS300	PARALLEL CONVEYANCE FOUNDATION RECOMMENDATIONS SCHEDULE S.O.E.
PCS301	PARALLEL COVEYANCE & REGULATORS M-22 & M-23 S.O.E. SHEET 1 OF 3
PCS302	PARALLEL COVEYANCE & REGULATORS M-22 & M-23 S.O.E. SHEET 2 OF 3
PCS303	PARALLEL COVEYANCE & REGULATORS M-22 & M-23 S.O.E. SHEET 3 OF 3
PCS304	PARALLEL CONVEYANCE M-27 S.O.E. SHEET 1 OF 7
PCS304A	PARALLEL CONVEYANCE M-27 S.O.E. SHEET 2 OF 7
PCS304B	PARALLEL CONVEYANCE M-27 S.O.E. SHEET 3 OF 7
PCS304C	PARALLEL CONVEYANCE M-27 S.O.E. SHEET 4 OF 7
PCS304D	PARALLEL CONVEYANCE M-27 S.O.E. SHEET 5 OF 7
PCS304E	PARALLEL CONVEYANCE M-27 S.O.E. SHEET 6 OF 7
PCS304F	PARALLEL CONVEYANCE M-27 S.O.E. SHEET 7 OF 7
PCS304G	PARALLEL CONVEYANCE M-28 S.O.E. SHEET 1 OF 6
PCS304H	PARALLEL CONVEYANCE M-28 S.O.E. SHEET 2 OF 6
PCS304I	PARALLEL CONVEYANCE M-28 S.O.E. SHEET 3 OF 6
PCS304J	PARALLEL CONVEYANCE M-28 S.O.E. SHEET 4 OF 6
PCS304K	PARALLEL CONVEYANCE M-28 S.O.E. SHEET 5 OF 6
PCS304L	PARALLEL CONVEYANCE M-28 S.O.E. SHEET 6 OF 6
PCS305	PARALLEL COVEYANCE & REGULATOR M-31 S.O.E.
PCS307	PARALLEL CONVEYANCE & REGULATORS M-37 & M-38 S.O.E.

DWG NO.	SHEET TITLE
PCS308	PARALLEL CONVEYANCE REGULATOR M-38 S.O.E.
PCS308A	PARALLEL CONVEYANCE M-38 S.O.E. SHEET 1 OF 5
PCS308B	PARALLEL CONVEYANCE M-38 S.O.E. SHEET 2 0F 5
PCS308C	PARALLEL CONVEYANCE M-38 S.O.E. SHEET 3 OF 5
PCS308D	PARALLEL CONVEYANCE M-38 S.O.E. SHEET 4 OF 5
PCS308E	PARALLEL CONVEYANCE M-38 S.O.E. SHEET 5 OF 5
PCS309	PARALLEL CONVEYANCE & REGULATOR M-38A S.O.E.
PCS310	PARALLEL CONVEYANCE & REGULATOR M-38B S.O.E.
PCS311	PARALLEL COVEYANCE S.O.E. DETAILS 1 OF 2
PCS312	PARALLEL COVEYANCE S.O.E. DETAILS 2 OF 2
PCS313	PARALLEL CONVEYANCE MICROPILES NOTES
PCS314	PARALLEL CONVEYANCE MICROPILES DETAILS
PCS315	RECORD OF BORING SHEET 1 OF 2
PCS316	RECORD OF BORING SHEET 2 OF 2
PCM400	REGULATOR M-39 ISOLATION GATE - DEMOLITION PLAN AND SECTIONS
PCM401	REGULATOR M-39 ISOLATION GATE - PLAN AND SECTIONS
PCS400	PARALLEL CONVEYANCE - STRUCTURAL DIVERSION CHAMBER NO.1 M-22 - PLANS
PCS600	PARALLEL CONVEYANCE - STRUCTURAL DIVERSION CHAMBER NO.1 M-22 - SECTIONS
PCS401	PARALLEL CONVEYANCE - STRUCTURAL DIVERSION CHAMBER NO.2 M-23 - PLANS
PCS601	PARALLEL CONVEYANCE - STRUCTURAL DIVERSION CHAMBER NO.2 M-23 - SECTIONS
PCS405	PARALLEL CONVEYANCE - STRUCTURAL DIVERSION CHAMBER NO.3 M-27 - PLANS
PCS605	PARALLEL CONVEYANCE - STRUCTURAL DIVERSION CHAMBER NO.3 M-27 - SECTIONS
PCS406	PARALLEL CONVEYANCE - STRUCTURAL SPECIAL DEEP DROP-PIPE MANHOLE ON EXISTING SEWER NO.1 M-27 - PLANS SHEET 1 OF 2
PCS407	PARALLEL CONVEYANCE - STRUCTURAL SPECIAL DEEP DROP-PIPE MANHOLE ON EXISTING SEWER NO.1 M-27 - PLANS SHEET 2 OF 2
PCS606	PARALLEL CONVEYANCE - STRUCTURAL SPECIAL DEEP DROP-PIPE MANHOLE ON EXISTING SEWER NO. 1 M-27 - SECTIONS
PCS706	PARALLEL CONVEYANCE - STRUCTURAL SPECIAL DEEP DROP-PIPE MANHOLE ON EXISTING SEWER NO. 1 M-27 - DETAILS

DWG NO.	SHEET TITLE
PCS410	PARALLEL CONVEYANCE - STRUCTURAL DIVERSION CHAMBER NO.4 M-28 - PLANS
PCS610	PARALLEL CONVEYANCE - STRUCTURAL DIVERSION CHAMBER NO.4 M-28 - SECTIONS
PCS411	PARALLEL CONVEYANCE - STRUCTURAL SPECIAL DEEP DROP-PIPE MANHOLE ON EXISTING SEWER NO. 2 M-28 - PLANS SHEET 1 OF 2
PCS412	PARALLEL CONVEYANCE - STRUCTURAL SPECIAL DEEP DROP-PIPE MANHOLE ON EXISTING SEWER NO. 2 M-28 - PLANS SHEET 2 OF 2
PCS611	PARALLEL CONVEYANCE - STRUCTURAL SPECIAL DEEP DROP-PIPE MANHOLE ON EXISTING SEWER NO. 2 M-28 - SECTIONS
PCS711	PARALLEL CONVEYANCE - STRUCTURAL SPECIAL DEEP DROP-PIPE MANHOLE ON EXISTING SEWER NO. 2 M-28 - DETAILS
PCS415	PARALLEL CONVEYANCE - STRUCTURAL MODIFIED EXISTING MANHOLE NO. 1 M-31 - PLANS
PCS615	PARALLEL CONVEYANCE - STRUCTURAL MODIFIED EXISTING MANHOLE NO. 1 M-31 - SECTIONS
PCS416	PARALLEL CONVEYANCE - STRUCTURAL MODIFIED EXISTING INTERCEPTOR SEWER MANHOLE NO. 1 M-31 DROP STRUCTURE - DEMOLITION PLANS AND SECTIONS
PCS417	PARALLEL CONVEYANCE - STRUCTURAL MODIFIED EXISTING INTERCEPTOR SEWER MANHOLE NO. 1 M-31 DROP STRUCTURE - PLANS
PCS616	PARALLEL CONVEYANCE - STRUCTURAL MODIFIED EXISTING INTERCEPTOR SEWER MANHOLE NO. 1 M-31 DROP STRUCTURE - SECTIONS
PCS716	PARALLEL CONVEYANCE - STRUCTURAL MODIFIED EXISTING INTERCEPTOR SEWER MANHOLE NO. 1 M-31 DROP STRUCTURE - DETAILS
PCS425	PARALLEL CONVEYANCE - STRUCTURAL MODIFIED EXISTING MANHOLE NO. 2 M-37 - PLANS
PCS625	PARALLEL CONVEYANCE - STRUCTURAL MODIFIED EXISTING MANHOLE NO. 2 M-37 - SECTIONS
PCS426	PARALLEL CONVEYANCE - STRUCTURAL MODIFIED EXISTING INTERCEPTOR SEWER MANHOLE NO. 3 REGULATOR M-37 - PLANS
PCS626	PARALLEL CONVEYANCE - STRUCTURAL MODIFIED EXISTING INTERCEPTOR SEWER MANHOLE NO. 3 REGULATOR M-37 - SECTIONS
PCS430	PARALLEL CONVEYANCE - STRUCTURAL MODIFIED EXISTING CHAMBER NO. 1 REGULATOR M-38 - PLANS

DWG NO.	SHEET TITLE
PCS630	PARALLEL CONVEYANCE - STRUCTURAL MODIFIED EXISTING CHAMBER NO. 1 REGULATOR M-38 - SECTIONS
PCS431	PARALLEL CONVEYANCE - STRUCTURAL CHAMBER NO. 2 - PLANS
PCS631	PARALLEL CONVEYANCE - STRUCTURAL CHAMBER NO. 2 - SECTIONS
PCS432	PARALLEL CONVEYANCE - STRUCTURAL MODIFIED EXISTING CHAMBER NO. 2 REGULATOR M-38A - PLANS
PCS632	PARALLEL CONVEYANCE - STRUCTURAL MODIFIED EXISTING CHAMBER NO. 2 REGULATOR M-38A - SECTIONS
PCS433	PARALLEL CONVEYANCE - STRUCTURAL MODIFIED EXISTING CHAMBER NO. 3 REGULATOR M-38B - PLANS
PCS633	PARALLEL CONVEYANCE - STRUCTURAL MODIFIED EXISTING CHAMBER NO. 3 REGULATOR M-38B - SECTIONS
PCS800	M-27 AND M-28 PARALLEL CONVEYANCE FOUNDATION RECOMMENDATIONS
PCS801	NEW PC SEWER CROSSING ABOVE EXISITING SEWER
PCS802	NEW PC SEWER CROSSING BELOW EXISITING UTILITY
PCS803	SEWER CROSSING JACKSON STREET AND WATER STREET
PCS804	SEWER CROSSING SHEET 4 OF 6
PCS805	SEWER CROSSING SHEET 5 OF 6
PCS806	SEWER CROSSING SHEET 6 OF 6
AT310	AUTOTURNS - DEP ACCESS SOUTH INTERCEPTOR GATE VIA JACKSON STREET & CHERRY STREET
AT311	AUTOTURNS - DEP ACCESS NORTH INTERCEPTOR GATE VIA EAST 20TH STREET SERVICE ROAD
AT315	AUTOTURNS - CITY BUS & SU30 EAST 20TH STREET & AVENUE C
	JOINT BID PACKAGE
	PHASING DRAWINGS
	MILESTONE DRAWINGS
	FLOODWALL MILESTONE DRAWINGS
	NYC PARKS STANDARD DETAILS

Standard Drawings

Note: See the "Specifications and Standards of New York City" sheet in Volume 3 of this contract for obtaining Standard Drawings.

NYCDOT Standard Details of Construction

DRAWING NO.	DESCRIPTION
H-1003B	PEDESTRIAN CROSSWALKS-MALL TYPE B
H-1004	TYPICAL TEMPORARY PEDESTRIAN PASSAGEWAY IN ROADWAY AREA DURING CONSTRUCTION
H-1005	BUS STOP IN NEW ROADWAY
H-1010	STEEL FACED CONCRETE CURB, STEEL FACING TYPE D
H-1011	SIDEWALK PEDESTRIAN RAMPS
H-1012	TIMBER CURB
H-1013	ILLUMINATED TIMBER BARRICADE
H-1014	TEMPORARY PEDESTRIAN STEEL BARRICADE
H-1015	STEEL FACED DROP CURB DRIVEWAYS
H-1017	BAR PICKET FENCE (4'-0" HIGH)
H-1034	TYPICAL CONSTRUCTION JOINTS FOR CONCRETE BASE FOR PAVEMENT
H-1036	CONCRETE POURED-IN-PLACE MALL CURB
H-1037	UNDER SIDEWALK DRAIN
H-1038	TYPE III BREAKAWAY BARRICADE
H-1040	TRANSVERSE CONSTRUCTION JOINTS FOR CONCRETE BASE
H-1044	CONCRETE CURB
H-1045	CONCRETE SIDEWALK
H-1046	STREET TREE PLANTING DETAIL TYPE 1
H-1046A	PROTECTIVE TREE BARRIER
H-1047	TYPICAL CURB DETAIL AT EXISTING TREES
H-1049	PLASTIC BARREL
H-1051	TEMPORARY WOODEN STEPS
H-1053	DETAILS FOR CONSTRUCTING AREAS OF ADJUSTMENT AND TRANSITION SECTIONS
H-1054	LIMITS OF MEASUREMENT FOR PAYMENT OF TEMPORARY ASPHALT PAVEMENT

DRAWING NO.	DESCRIPTION
H-1055	PAVEMENT KEY TYPE A, B-1, B-2, C
H-1057	TEMPORARY STORAGE AREA
MS-1000	NEW YORK CITY COMPARISON OF DATUM PLATES
MS-1001	SIDEWALK PAVEMENT LIMITS
MS-1003	TYPICAL ROADWAY CROSS-SECTION/RESURFACING
MS-1005	ADJUSTMENT AT CATCH BASINS

NYCDEP Sewer Design Standards

DRAWING NO.	DESCRIPTION
SE1	STANDARD FOR VITRIFIED CLAY PIPE ON CONCRETE CRADLE ON EARTH OR ON ROCK
SE3	STANDARD FOR CIRCULAR REINFORCED CONCRETE PIPE ON CONCRETE CRADLE ON EARTH OR ON ROCK
SE11	STANDARD FOR MANHOLE ON 8” DIA. TO 30” DIA. PIPE SEWERS IN DRY LOCATION
SE12	STANDARD FOR MANHOLE ON 8” DIA. TO 30” DIA. PIPE SEWERS ON PILE IN DRY LOCATION
SE14	STANDARD FOR MANHOLE ON 8” DIA. TO 30” DIA. PIPE SEWERS IN WET LOCATION
SE28A, SE28B, SE28C, & SE28D	STANDARD FOR 4'-0" DIAMETER PRECAST MANHOLE (4 DWGS)
SE31A & SE31B	STANDARD FOR PRECAST MANHOLE DETAILS (2 DWGS)
SE32	STANDARD FOR ALTERNATE MONOLITHIC BASE SECTION FOR PRECAST MANHOLES (POURED IN PLACE)
SE35	STANDARD FOR REMOVABLE PRECAST REINFORCED CONCRETE SLAB
SE39	STANDARD FOR 27" DIAMETER CAST IRON MANHOLE FRAME AND COVER
SE40	STANDARD FOR 27" DIAMETER CAST IRON EXTENSION RING FOR 27" DIAMETER MANHOLE FRAME AND COVER
SE43	STANDARD FOR CAST IRON MANHOLE STEP
SE44	STANDARD FOR CAST IRON MANHOLE STEP (BOLT-ON TYPE)

DRAWING NO.	DESCRIPTION
SE45	STANDARD FOR CIRCULAR CAST IRON MANHOLE STEP (BOLT-ON TYPE)
SE46	STANDARD FOR PLASTIC MANHOLE STEP
SE47	STANDARD FOR TYPE 1 CATCH BASIN (WITH CURB PIECE)
SE48	STANDARD FOR TYPE 2 CATCH BASIN (WITHOUT CURB PIECE)
SE49B	STANDARD FOR TYPE 3 CATCH BASIN (WITH CURB PIECE)
SE52A & SE52B	STANDARD FOR PRECAST TYPE 1 CATCH BASIN (2 DWGS)
SE53A	STANDARD FOR PRECAST TYPE 2 CATCH BASIN
SE53B	STANDARD FOR SPLIT PRECAST TYPE 2 CATCH BASIN
SE54B	STANDARD FOR PRECAST TYPE 3 CATCH BASIN (WITH CURB PIECE)
SE55C	STANDARD FOR PRECAST DOUBLE CATCH BASIN
SE57	STANDARD FOR CAST IRON FRAME FOR CATCH BASINS (WITH CURB PIECE)
SE58A	STANDARD FOR CAST IRON FRAME FOR CATCH BASINS (WITHOUT CURB PIECE)
SE58B	STANDARD FOR CAST IRON FRAME FOR TYPE 3 CATCH BASINS (WITH CURB PIECE)
SE59A & SE59B	STANDARD FOR CAST IRON GRATING, BACK PLATE, AND CURB PIECE FOR CATCH BASINS (2 DWGS)
SE60	STANDARD FOR CAST IRON HOOD AND HOOKS FOR CATCH BASINS
SE61	STANDARD FOR DUCTILE IRON PIPE ALTERNATIVE
SE62	STANDARD FOR HOUSE CONNECTIONS
SE67	STANDARD FOR CONSTRUCTION OF CATCH BASIN (NO EXISTING CURB)
SE70	STANDARD FOR MINIMUM LOAD DIAGRAM FOR NON-WATERTIGHT SHEETING DESIGN
SE71	STANDARD FOR MINIMUM LOAD DIAGRAM FOR WATERTIGHT SHEETING DESIGN

NYCDEP Water Main Standard Drawings

DRAWING NO.	DESCRIPTION
10240-A-Z	VALVE BOX SKIRT, CAST IRON
10241-A-Z	HYDRANT VALVE BOX, CAST IRON
11576-A-Z	FOUNDATIONS FOR VALVE BOXES
13547-B-Z	WIDE FLANGE MANHOLE HEAD & COVER, CAST IRON
22809-Z	HYDRANT DRAIN BASE
31050-Z	STANDARD METHODS FOR HYDRANT DRAINAGE, 31050-Z SUPERSEDES 11522-Z
44292-B-Z	GRAVEL OR BROKEN STONE BEDDING AND FILTER FABRIC INSTALLATION FOR DUCTILE CAST IRON PIPES
44387-Z-B	RODDING ALL SPECIAL CASTINGS, LEAD & MECHANICAL JOINTS ON LOW PRESSURE WATER MAINS, PUSH-ON JOINT PIPE
45161-A-Z	STANDARD STEEL HYDRANT FENDER
45700-W	STANDARD SUPPORTS FOR WATER MAINS INSTALLED AT SUBWAYS AND IN EXTREMELY YIELDING SOIL
46464-Z	METHOD FOR PROTECTING D.I. WATER MAINS WITH SHALLOW (LESS THAN 24") COVER
WM0401	PAVEMENT EXCAVATION LIMITS FOR PERMANENT RESTORATION IN STREETS NOT PROTECTED BY N.Y.C. ADM. CODE § 19.144, WATER MAINS 20" AND LESS IN DIAMETER
WM0402	PAVEMENT EXCAVATION LIMITS FOR PERMANENT RESTORATION IN STREETS PROTECTED BY N.Y.C. ADM. CODE § 19.144, WATER MAINS 20" AND LESS IN DIAMETER
WM0403	PAVEMENT EXCAVATION LIMITS FOR PERMANENT RESTORATION, WATER MAINS 24" AND LARGER IN DIAMETER

R - PAGES

REVISIONS TO STANDARD SPECIFICATIONS

NOTICE

The Specification Bulletin(s) ("SB(s)") referenced in this Section (R-Pages) may consist of revisions to the following Standard Specifications:

- New York City Department of Transportation ("NYC DOT") Standard Highway Specifications, dated 8/1/2015;
- New York City Department of Environmental Protection ("NYC DEP") Standard Sewer and Water Main Specifications, dated 7/1/2014; and
- NYC DEP Specifications for Trunk Main Work, dated 7/2014.

The SB(s) modify and supersede portions of the applicable Standard Specifications. The provisions contained in this Contract's I-Pages, S-Pages and SW-Pages may further modify the applicable Standard Specifications.

The following SB(s) are included as part of this contract:

- SB 16-001 – REVISIONS TO THE NYC DOT STANDARD HIGHWAY SPECIFICATIONS.
- SB 16-002 – REVISIONS TO THE NYC DEP STANDARD SEWER AND WATER MAIN SPECIFICATIONS.
- SB 17-001 – UV CURED-IN-PLACE-PIPE (CIPP) LINING METHOD
- *SB 17-002 – SUPERSEDED BY SB 18-001*
- SB 17-003 – ENGINEERS FIELD OFFICE
- SB 17-004 – FIRE DEPARTMENT FACILITIES
- SB 17-005 – DIGITAL PHOTOGRAPHS
- SB 17-006 – RECORDS OF SUBSURFACE STRUCTURES
- SB 17-007 – MOBILIZATION
- SB 17-008 – QUALIFICATION CARDS
- SB 17-009 – SALVAGEABLE MATERIALS
- SB 17-010 – MILLED ASPHALTIC CONCRETE AGGREGATE
- *SB 17-011 – SUPERSEDED BY SB 21-004*

- SB 17-012 – TEMPORARY HOUSE CONNECTION MATERIAL
- SB 18-001 – RODENT AND WATERBUG PEST CONTROL
- SB 18-002 – COLOR SURFACE TREATMENT FOR PAVEMENTS
- SB 18-003 – WATER AND SEWER GENERAL PROVISIONS
- SB 18-004 – CUTTING DUCTILE IRON PIPE
- SB 18-005 – STOCKPILES
- SB 19-001 – RESTORATION OF PAVEMENT SURFACE
- SB 19-002 – SCHEDULE OF OPERATIONS
- SB 21-001 – SALVAGEABLE MATERIALS
- SB 21-002 – HYDRANTS
- SB 21-003 – BACK UP ALARMS, MAINTENANCE OF SITE
- SB 21-004 – DETECTABLE WARNING UNITS

The SB(s) are available online at:
http://www1.nyc.gov/site/ddc/resources/specification-bulletins.page or for pickup between 8:00 AM and 4:00 PM at 30-30 Thomson Avenue, 3rd Floor, Division of Infrastructure, Long Island City, NY 11101. Contacts:

- Mr. Richard Jones, (718) 391-1417
- Mr. Salman Macktoom, (718) 391-2041

(NO FURTHER TEXT THIS PAGE)

PROJECT DESCRIPTION

PROJECT DESCRIPTION AND NYSDOT SPECIFICATION REFERENCES

SANDRESPC

The following pages provide the project description and the parameters for using New York State Department of Transportation (NYSDOT) specifications as part of the Contract Work.

(NO TEXT ON THIS PAGE)

Project Description:

The Project is located on the East Side of the Borough of Manhattan, New York County, NY in the sewershed from Montgomery Street to the south to 24th Street in the north from the FDR Drive to Avenue C. This Project will include modifications to the existing combined sewer system to improve drainage within the project area. These improvements include isolation gates on existing sewers and new, parallel sewer lines to increase system capacity. Two interceptor gates are designed to isolate the drainage protected area from the unprotected portions of the larger sewershed during a storm surge event. These gates would be closed during a storm event to eliminate potential pathways for storm surge waters to inundate the existing sewer system and flood inland areas within the ESCR protected areas. The interceptor gates will be installed in new chambers to be constructed on the existing 108-inch diameter interceptor which is located approximately 40 feet below grade and will be supported by equipment housed in a new single-story building adjacent to each chamber. The interceptor gate building will contain the controls, electrical, hydraulic, and other ancillary components to operate the interceptor gates.

The southern interceptor gate chamber and building will be located just south of the Corlears Hook Bridge within an existing sidewalk and lawn along the western edge of the FDR Drive right-of-way, adjacent to Corlears Hook Park. The northern interceptor gate chamber and building will be located in the right-of-way and median of the East 20th Street service road, just west of the intersection with Avenue C.

NYSDOT Specifications

All requirements as defined in the City of New York Standard Construction Contract (“Standard Construction Contract”) are to be followed. NYSDOT specific construction management and contractual requirements that are referenced in NYSDOT specifications are not to be inadvertently incorporated or take precedent over Contract requirements, including the Standard Construction Contract, Special Specifications or Provisions, the New York City Department of Transportation Standard Highway Specifications, or the New York City Department of Environmental Protection Standard Sewer and Water Specifications.

References are made herein to certain NYSDOT specifications. All references to the "Department", "Materials Bureau", "Regional Engineer", "Regional Landscape Architect", "Landscape Architect", "DCES", or other reference to NYSDOT offices or personnel are deemed to mean the "ENGINEER" as that term is defined in the Standard Construction Contract. However, where references are made to materials or contractors or subcontractors being required to appear on NYSDOT approved lists, these references and requirements remain unchanged.

Reference to NYSDOT specifications will not be deemed to imply NYSDOT or New York State involvement in any testing and approval of materials or in the supervision of construction. In the event of a conflict, the Standard Construction Contract, the contract drawings and New York City specifications will prevail over any NYSDOT specifications, unless the ENGINEER directs otherwise.

ITEM NUMBER	SPECIFICATION NAME	SPECIFICATION TYPE
551.40200017	FURNISHING EQUIPMENT FOR INSTALLING MICROPILES	PIN APPROVED
619.01991308	DAILY WORK ZONE TRAFFIC CONTROL (BARRIER/SHADOW VEHICLE)	NYSDOT STANDARD
619.1802	TEMPORARY IMPACT ATTENUATOR	NYSDOT STANDARD
619.1812	TEMPORARY IMPACT ATTENUATOR- GATING (TEST LEVEL 2)	NYSDOT STANDARD
698.05	FUEL PRICE ADJUSTMENT	NYSDOT STANDARD
698.06	STEEL/IRON PRICE ADJUSTMENT	NYSDOT STANDARD

PIN APPROVED SPECIFICATIONS ARE LOCATED IN THE NYSDOT PAY ITEM CATALOG: www.dot.ny.gov/pic

NYSDOT STANDARD SPECIFICATIONS ARE LOCATED ON THE NYSDOT WEBSITE: www.dot.ny.gov/main/business-center/engineering/specifications/updated-standard-specifications-us

Special specifications are located in Volume 3 of this Contract.

GENERAL

GENERAL SPECIAL SPECIFICATIONS

SANDRESPC

The specifications in the GENERAL-Pages provide requirements for construction management and execution of the Work.

The GENERAL-Pages supplement and modify the specifications shown on the Specifications and Standards of New York City sheet at the beginning of this Volume 3.

(NO TEXT ON THIS PAGE)

TABLE OF CONTENTS

Section **Page No.**

Table of Contents i
Section HW-900H – Allowance for City Work Acceleration 1
Section 6.39 B – Mobilization 2
Section 6.52 FED – Uniformed Flagperson 4
Section HW-908 – Allowance for Extra Work Due to Archeological Discoveries 7
SECTION 9.06 HW Allowance for Decorative Mesh Fabric 8
Section ESCR 9.30 – Stormwater Pollution Prevention 9
Section ESCR-5 – Construction and Demolition Waste Management 15
Section ESCR-6 - Conservation of Water and Energy 20
Section ESCR-10 – Air Quality Monitoring 22
Section ESCR-11 – Noise Monitoring 25
Section 6.40 CR - Engineer's Field Office 27

(NO TEXT ON THIS PAGE)

SECTION HW-900H – ALLOWANCE FOR CITY WORK ACCELERATION

Under this Section, the Contractor will be paid for City work deemed necessary by DDC's Commissioner to accelerate the City work items in the project during critical periods but the use of this item will expire on the original contract substantial completion date. Such accelerated City work includes:

A. 100% of the premium portions of overtime pay for working during non-scheduled work hours which must be defined as those hours of work outside the permissible hours stated in the original contract OCMC Traffic Stipulations; or,

B. The premium portion of overtime pay for overtime actually worked beyond the 40-hour work week but within the permissible hours of work stated in the original contract OCMC Traffic Stipulations; or,

C. All other incidental expenditures caused by modifications of project site regulations or administrative requirements ordered by the Commissioner that result in additional costs to perform contract work as specified.

Such accelerated City work must be paid for under this item in accordance with the requirements of **Articles 25 and 26** of the Standard Construction Contract.

Payment made under this Fixed Sum item must cover the cost of all labor, materials, plant, equipment, insurance, and incidentals necessary to accelerate the City work as ordered by DDC's Commissioner.

No guarantee is given that this allowance item will in fact be required in this contract. The estimated "fixed sum" amount shown in the Bid Schedule is included in the total bid solely to insure a method of payment for any accelerated work performed by the Contractor, as directed by DDC's Commissioner.

Payment will be made under:

Item No.	Item	Pay Unit
HW-900H	ALLOWANCE FOR CITY WORK ACCELERATION	F.S.

SECTION 6.39 B – MOBILIZATION

6.39.1. DESCRIPTION. Under this section, the Contractor must set up all necessary general plant and facilities, including shops, storage areas, office and such sanitary and other facilities as are required by City, State or Federal law or regulation. Unless otherwise provided, the cost of required bonds and/or any other similar significant initial expenses required for the initiation of the contract work must also be included in this section. The determination of the adequacy of Contractor's facilities, except as noted above, will be made by the Engineer.

6.39.2. MATERIALS. Unless otherwise specified, materials required under this section are not part of the completed contract and may be as selected by the Contractor.

6.39.3. CONSTRUCTION METHODS. Such work as is done in providing the facilities and services under this section must be done in a safe and workmanlike manner and must conform with any pertinent City, State or Federal law, regulation or code. The Contractor must provide facilities and services under this section that are planned and executed to ensure the maintenance of safety and good housekeeping at the construction site.

6.39.4. PRICE TO COVER.

Payment will be made by lump sum. The amount bid will include the furnishing and maintaining of any plant, services or other facilities noted under "Description" to the extent and at the time the Contractor deems them necessary for the Contractor's operations, consistent with the requirements of this section and the contract. The amount bid for this lump sum item will be payable to the Contractor when the following items are submitted and approved by the Engineer:

1. The provision of a Field Office per Section 6.40 CR;
2. The Site Safety Plan per the Safety Requirements section of the Information for Bidders;
3. The Preliminary CPM Schedule and Baseline CPM Schedule per the "CRITICAL PATH METHOD (CPM) SCHEDULE" article in the S-Pages;
4. The Progress Schedule per Standard Construction Contract Article 9;
5. Preconstruction Photographs per Section 6.43 D of the NYCDOT Standard Highway Specifications are submitted to the Engineer; and
6. Construction Report per Item ESCR-76.11CR.

However, should the Contract be terminated, or its term expires prior to completion of at least fifty percent (50%) of the original price bid for the Contract, then the Contractor will be paid a proportionate amount of this item (hereinafter referred to as the "Adjusted Mobilization Payment") based on the following formula:

$$\text{Adjusted Mobilization Payment} = \text{As Bid Mobilization Cost} \times \frac{\text{Total Actual Payments to the Contractor approved by the Engineer}}{\text{Original Total Bid Price + Approved and Registered Change Orders}}$$

Where the Contractor has already received the original total payment for this item and the Contract has been terminated or expired prior to completion of at least fifty percent (50%) of the work covered under the original price bid for the Contract, then any monies owed by the City due to the above specified reduction in payment will be withheld from the monies the City owes to the Contractor and/or the City reserves a claim to such funds from the Contractor.

The amount bid for Mobilization must not exceed eight percent (8%) of the total contract price, excluding the price bid for Mobilization, and in no case will payment under this item exceed the original price bid for this item.

Payment will be made under:

Item No.	**Item**	**Pay Unit**
6.39 B	MOBILIZATION	L.S.

SECTION 6.52 FED – UNIFORMED FLAGPERSON

6.52FED.1. INTENT. This section describes the employment of uniformed flagpersons to direct and detour traffic.

6.52FED.2. DESCRIPTION. The Contractor must furnish an adequate number of flagpersons to control vehicular and pedestrian traffic when it is necessary to maintain alternating one-way traffic in one lane of a two-way roadway, and at all other locations where construction operations, construction vehicles and equipment, detours, and temporary traffic patterns related to the construction operations require positive temporary traffic control for safe, efficient traffic operations.

6.52FED.3. METHODS. All flagpersons must be English speaking and adequately trained and certified in flagging operations by a recognized training program such as that provided by the American Traffic Safety Services Association, the National Safety Council, unions or construction industry associations, or by an individual who holds a current certification as a flagger training instructor from such a program.

All flagpersons, their apparel, hand-signaling devices, active two-way radios, and procedures to be used by them must be in compliance with the requirements of Chapter 6E. FLAGGER CONTROL, in the Federal "U.S. Department of Transportation, Federal Highway Administration, "Manual on Uniform Traffic Control Devices for Streets and Highways" current edition.

Prior to the start of flagging operations, the Contractor must provide to the Engineer a list of certified flagpersons to be used in the contract, identifying the source of flagger training for each individual. When requested by the Engineer, flagpersons must demonstrate their competency in flagging procedures. Flagpersons not competent in flagging procedures to the satisfaction of the Engineer must be retrained or replaced at once.

The Contractor will be given a minimum of 12 hours advance notice by the Engineer as to when to furnish a flagperson.

6.52FED.4. METHOD OF MEASUREMENT. The fixed price lump sum shown in the bid proposal for this item will be considered the price bid, although actual payment will be based on the authorized work performed by the Uniformed Flagpersons. The fixed sum is not to be altered in any manner by the bidder.

It is agreed that the quantity to be measured for payment will be the number of person-hours of uniformed flagperson service actually performed, as authorized by the Engineer.

Laborers who are not certified uniformed flagpersons will not be measured for payment as flagperson under this item.

6.52FED.5. BASIS OF PAYMENT. The Contract price for this item will be a lump sum price for the work performed under this item and will be equal to the total sum of the amount of allowed wages paid for all authorized Uniformed Flagpersons performing vehicular and pedestrian traffic management.

The amount to be paid per person-hour will be calculated as follows:

For the Entity directly employing the flagperson:	
Wages & Benefits:	The hourly rates for wages & benefits ("supplemental") will be the rates listed in the prevailing wage schedule for Laborers *(Notes 1, 2)*.
Worker's Compensation Insurance:	Worker's Compensation Insurance will be paid for at cost, subject to the provisions of Article 26.2.9 of the Standard Construction Contract.
Taxes:	Applicable payroll taxes will be paid for at the appropriate cost.
Overhead & Profit:	12% overhead markup and 10% profit markup will be applied to the wage & benefit amounts. 5% combined overhead & profit markup will be applied to the Worker's Compensation Insurance amount. 0% overhead or profit markup on the premium portion of overtime wages. 0% overhead or profit markup on payroll taxes.

For the Contractor only, if the Entity directly employing the flagperson is a subcontractor:	
Overhead & Profit:	5% overhead and profit on subcontractor amounts as calculated above.

Note 1: If the contract has multiple prevailing wage schedules (e.g., NYC Comptroller Section 220 prevailing wage schedule or Federal Davis Bacon prevailing wage schedule) with different Laborer wage & benefit rates, the higher wage & benefit rates will be used. The Laborer rates appropriate for the type of work being performed will be used.
Note 2: The prevailing wages & benefits in effect at the time of work will be used.

Overhead will include without limitation, all costs and expenses in connection with administration, management superintendence, and all material costs for their apparel, hand-signaling devices, active two-way radios, and any other equipment required, and insurance required by Schedule A of the General Conditions other than Workers' Compensation Insurance.

The Contactor must submit to the Engineer satisfactory evidence of payment on certified payroll forms published by the Comptroller of the City of New York. No retainage will be withheld by the Department on such payments made under this section.

The total estimated cost of this item is the "fixed sum" amount shown for this item in the Bid Schedule. No guarantee is given that the actual total cost for this item will in fact be the "fixed sum" amount. The "fixed sum" amount is included in the total bid solely to ensure that sufficient monies will be available to pay the Contractor for these services.

The "fixed sum" is for bidding purposes only and must not be varied in the bid. The Contractor will be paid for the actual amount regardless of the fixed sum, which may be more or less than the fixed sum amount.

The Contractor must maintain separate books of accounts and must not charge any portion of the wages and benefits for Uniformed Flagpersons to another part of the work. Payment and partial payments under this item will be treated separately from the rest of the contract items.

The Comptroller's certified payroll report forms must be completed on a weekly basis and submitted to the Engineer every thirty days or whenever a payment requisition is submitted in less than thirty days. The Contractor must submit signed original daily sign-in sheets and any required daily reports, as required under this contract or directed by the Engineer.

Payment will be made under:

Item No.	**Item**	**Pay Unit**
6.52 FED	UNIFORMED FLAGPERSON	FIXED SUM

SECTION HW-908 – ALLOWANCE FOR EXTRA WORK DUE TO ARCHEOLOGICAL DISCOVERIES

In accordance with the Special Provisions article titled “ARCHAEOLOGICAL DISCOVERIES”, should extra work be ordered by the Engineer as a result of any archaeological discoveries being found under this project, it must be paid for under this item as extra work in accordance with the requirements of Article 26 in the Standard Construction Contract dated January 2018.

Payment made under this Fixed Sum item must cover the cost of all labor, materials, plant, equipment, insurance, and incidentals necessary to complete any extra work ordered by the Engineer due to archaeological discoveries found at the site.

No guarantee is given that this allowance item will in fact be required in this contract. The estimated “fixed sum” amount shown in the Bid Schedule is included in the total bid solely to insure a method of payment for any extra work performed by the Contractor, as directed by the Engineer in consultation with the City’s Archaeologist due to archaeological discoveries found at the site.

Payment will be made under:

Item No.	**Item**	**Pay Unit**
HW-908	ALLOWANCE FOR EXTRA WORK DUE TO ARCHEOLOGICAL DISCOVERIES	F.S.

SECTION 9.06 HW
ALLOWANCE FOR DECORATIVE MESH FABRIC

9.06 HW.1. DESCRIPTION. Under this section, the Contractor will be paid to furnish and install panels of breathable mesh fabric upon which art work is printed in a maximum of four (4) colors, as directed by the Engineer. Each panel shall also contain metal grommets installed at a one (1) foot maximum spacing around the perimeter of the fabric for mounting on the Temporary Chain Link Fence (Item No. 6.34 ACTP), unless an alternate method of mounting the fabric is proposed by the Contractor and approved by the Engineer. All art work to be printed on the fabric will be provided to the Contractor by the City.

At the completion of the work the panels shall remain the property of the City and shall be delivered to the Engineer, unless otherwise directed.

9.06 HW.2. PRICE TO COVER The lump sum payment made under this item shall be equal to the sum total of all invoices submitted by the Contractor, as approved by the Engineer, for furnishing and installing decorative mesh fabric materials, to the satisfaction of the Engineer, plus an allowance of 10% overhead and 10% profit.

The total estimated cost of this item is the "fixed sum" amount shown for this item in the Bid Schedule and shall not be varied in the bid. No guarantee is given that the actual lump sum cost for this item will in fact be the "fixed sum" amount. The "fixed sum" amount is included in the bid solely to ensure that sufficient monies will be available to pay the Contractor for this work, which may be more or less than the fixed amount. This "fixed sum" amount shall be included with the other amounts bid by the Contractor for all the other items under this contract.

The unit price shall cover the cost of all labor, materials, equipment, insurance, and incidentals necessary to complete the work under this section in accordance with the drawings, the specifications and the directions of the Engineer.

Payment will be made under:

Item No.	Description	Pay Unit
9.06 HW	ALLOWANCE FOR DECORATIVE MESH FABRIC	F.S.

SECTION ESCR 9.30 – STORMWATER POLLUTION PREVENTION

9.30.1. INTENT.

The intent of this section is to address erosion and sediment control as well as control of pollutants generated during construction activities that disturb an area of one acre or more. It also includes activities involving soil disturbances of less than one acre where the Department has determined that a SPDES permit is required for Stormwater discharges that may contribute to a violation of a water quality standard. The objective is to implement a Stormwater Pollution Prevention Plan (SWPPP) that will minimize the pollutants entering the storm sewer systems in compliance with the New York's State Pollutant Discharge Elimination System (SPDES) General Permit for Stormwater Runoff from Construction Activity, GP-0-20-001, issued pursuant to Article 17, Titles 7, 8 and Article 70 of the Environmental Conservation Law (ECL) and in compliance with the City's Separate Municipal Separate Storm Sewer System Construction Permitting (MS4CP) Program. The MS4CP Program was established to meet the requirements of the SPDES Permit, NY-0287890, issued on August 1, 2015 for MS4s owned or operated by the City of New York.

The Department is currently pursuing a 5-acre waiver with New York State Department of Environmental Conservation (NYSDEC) and New York City Department of Environmental Protection (NYCDEP) for the overall ESCR Project, the provisions and requirements of which will be made available to the Contractor. The maximum concurrent land disturbance associated with SANDRESPC work shall be less than 2 acres and any exceedances shall be coordinated with the separate ESCR Contracts to ensure that the total maximum concurrent land disturbance across all ESCR Contracts does not exceed the limit granted by the NYCDEP.

A copy of the SWPPP (February 2020) for the ESCR Contract is attached to the specifications and includes copies of the General Permit and the Notice of Intent (NOI) for New York. Copies of the MS4 SPDES Permit and other Information on the City's MS4CP Program are available at the following website:

https://www1.nyc.gov/site/dep/water/municipal-separate-storm-sewer-system.page

The sediment and erosion controls shown in the SWPPP and Sediment and Erosion Control drawings were developed for the ESCR project; any changes to scheduling or sequencing would need to be coordinated and in compliance with the SPDES General Permit for Stormwater Runoff from Construction Activity and the New York City MS4 Construction Permit.

9.30.2. MATERIALS AND METHODS.

The Contractor and their subcontractor(s) must sign onto the SWPPP as the operator and be responsible for implementing and maintaining the SWPPP prepared for this Contract. The Contractor shall retain the services of an independent Licensed/Certified Professional with practical experience in the principles and practices of erosion and sediment control and Stormwater management, to perform the role of the "Qualified Inspector." The "Qualified Inspector" must be a Professional Engineer or a Landscape Architect licensed to practice in New York State, or a Soil and Water Conservation Society Certified Professional in Erosion and Sediment Control (CPESC) who is independent from the Contractor.

The Contractor shall implement Stormwater Management Practices (SMPs) that are to be used to reduce the pollutants in stormwater discharges, their sequence of implementation and associated design details of the SMPs to be installed for their designated contract as shown in the SWPPP. All practices included in the SWPPP shall be in conformance with the most current version of the New York State Standard and Specifications for Erosion and Sediment Control.

The Contractor shall provide site specific updates to Erosion and Sediment Control (E&SC) Plans contained in the SWPPP to accommodate their means and methods of construction and submit these for approval. The updated E&SC Plans shall include a minimum of the following in accordance with SMPs described in the SWPPP:

1. A site map/construction drawing(s) showing the total site area, all improvements, areas of disturbance, areas that will not be disturbed, existing vegetation, the specific locations, sizes and length of each erosion and sediment control practice, on-site and adjacent off-site surface waters, wetlands and drainage patterns that could be affected by the construction activity, existing and final slopes, equipment storage areas and locations of the stormwater discharge;
2. A Construction phasing plan and sequence of operations describing the intended order of construction activities, including clearing and grubbing, excavation and grading, utility and infrastructure installation and any other activity at the site that results in soil disturbance. The construction phasing plan must include a timeline in accordance with the overall project schedule;
3. A description of the minimum erosion and sediment control practices to be installed or implemented for each construction activity that will result in soil disturbance. Include a schedule that identifies the timing of initial placement or implementation of each erosion and sediment control practice and the minimum time frames that each practice should remain in place or be implemented;
4. A temporary or permanent soil stabilization plan that meets the requirements of the most current version of the New York Standards and Specifications for Erosion and Sediment Control, for each stage of the project, including initial land clearing and grubbing to project completion and achievement of final stabilization;
5. The dimensions, material specifications, installation details, and operation and maintenance requirements for all sediment control practices;
6. An inspection schedule for the Contractor and Sub-Contractor(s) identified in the SWPPP, to ensure continuous and effective operation of the erosion and sediment control practices; and,
7. a description of the pollution prevention measures that will be used to control litter, construction chemicals and construction debris from becoming a pollutant source in the stormwater discharges.

<u>The Contractor must obtain and maintain a copy of the prepared SWPPP materials for this Contracts, including the SWPPP, SWPPP MS4 Acceptance Form from NYC Department of Environmental Protection (DEP), and NYSDEC NOI. The Contractor is responsible for the preparation, submittal, and procurement of the Permit Initiation Form associated with the NYCDEP SCP. Work must not begin until the permit identification number is issued by the NYSDEC, SCP is issued for the project by NYCDEP, and an initial inspection is conducted by the Qualified Inspector certifying that the appropriate control measures specified in the SWPPP have been adequately implemented to the satisfaction of the Engineer in consultation with the DDC Engineering Support Unit. There are multiple Contracts with overlapping Work (SANDRESEP, SANDRESM1, SANDRESM2, and SANDRESPC) and the Contractor is responsible for any coordination of overlapping work required to fully implement the SWPPP at no additional cost to the City.</u>

9.30.3. DEVIATIONS AND AMENDMENTS.

Any Contractor-initiated amendments to the SWPPP that deviates from the NYSDEC technical standard and/or the NYCDEP Stormwater Design Manual must have a section justifying any non-conformance. The justification must include, but not be limited to, the following:

1. Statement of each deviation from City and State requirements;
2. Statement of the reasons for each deviation and reasons for supporting adopted alternatives;
3. Provide information which demonstrates that the deviation or alternative design is equivalent to the Technical Standards and the Stormwater Design Manual;
4. Analysis of the water quality impacts; and,
5. Determination of no-net-increase changes, if applicable.

The Contractor must maintain the SWPPP current and have the Qualified Inspector amend the SWPPP whenever:

1. There is a significant change in construction or operation which may have a significant effect on the potential for the discharge of pollutants to the waters of the New York State and which has not otherwise been addressed in the SWPPP; or,
2. The SWPPP proves to be ineffective in:
    a) Eliminating or significantly minimizing pollutants generated from sources identified in the SWPPP as required by this general permit, or
    b) Achieving the general objectives of controlling pollutants in stormwater discharges from permitted construction activities.

Additionally, the SWPPP must be amended to identify any new Contractor or Sub-contractor that will implement any measures of the SWPPP. Any Contractor-initiated amendments to the SWPPP shall be made at no additional cost to the City.

9.30.4. CERTIFICATION.

The SWPPP must clearly identify the Contractor and Sub-contractors that will implement each measure identified in the SWPPP. The Contractor and all Subcontractors identified in the SWPPP and who perform professional services at the site must implement the provisions of the plan and provide certification of the SWPPP in accordance with the provisions of the general permit GP-0-15-002 and the SCP The Contractor must also certify in the SWPPP that all appropriate stormwater and erosion control measures will be in place before commencement of construction of any segment of the project that requires such measures. Such certifications must become part of the SWPPP for the construction activity covered under this general permit. The Certification must include the name and title of the person providing signature of this permit; the name address and telephone number of the contracting firm; the address or other identifying description of the site; and, the date the certification is made.

9.30.5. SITE ASSESSMENT, INSPECTION AND MAINTENANCE.

The Contractor must have the Qualified Inspector conduct an assessment of the site prior to commencement of construction and certify in an inspection report that the appropriate erosion and sediment controls described in the SWPPP have been adequately installed or implemented to ensure overall preparedness of the site before the commencement of construction. Following the commencement of construction, site inspections must be conducted by the Qualified Inspector at least every seven (7) calendar days and within twenty-four (24) hours of the end of

each rainfall event of 0.5 inches or greater. For construction sites where soil disturbance is greater than five (5) acres at one time, the Qualified Inspector must conduct at least two (2) site inspections every seven (7) calendar days and within twenty-four (24) hours of the end of each rainfall event of 0.5 inches or greater and any additional inspections as required by NYSDEC or NYCDEP. The two inspections must be separated by a minimum of two (2) full calendar days. Subsequent to each inspection, the Qualified Inspector must prepare an inspection report and submit the original to the Engineer and one copy to the Infrastructure-Engineering Support Unit. At a minimum, the inspection report must include, but not limited to, the following information:

1. Date and Time of inspection;
2. Name and Title of person performing the inspection;
3. A description of the weather and soil conditions (e.g. dry, wet, saturated) at the time of the inspection;
4. A description of the condition runoff at all points of discharged from the construction site. This must include identification of any discharges of sediment from the construction site;
5. A description of the condition of all-natural surface waterbodies located within or immediately adjacent to the properties boundaries of the construction site which receive runoff from disturbed areas. This must include identification of any discharges of sediment to the surface waterbody;
6. Record of any evidence of soil erosion on the site, potential for pollutants entering the drainage systems, problems at discharge points (such as turbidity in receiving water) and signs of soil and mud transport from the site to the public road at the limits of the project;
7. Identification of all erosion and sediment control practices that need repair or maintenance;
8. Identification of all erosion and sediment practices that were not installed properly or are not functioning as designed and need to be reinstalled or replaced;
9. Description and sketch of areas that are disturbed at the time of the inspection and areas that have been stabilized (temporary and/or final) since the last inspection;
10. Corrective actions that must be taken to install, repair, replace or maintain erosion and sediment control practices; and to correct deficiencies identified with the construction of post-construction stormwater management practices;
11. Digital photographs, with date stamp, that clearly show the condition of all practices that have been identified as needing corrective actions. The Qualified Inspector must attach paper color copies of the digital photographs to the inspection report. The Qualified Inspector must also take digital photographs with date stamp, that clearly show the conditions of the practice(s) after the corrective actions has been completed;
12. Within one business day of the completion of an inspection, the Qualified Inspector must notify the Contractor and the Engineer of any corrective actions that need to be taken. The Contractor must begin implementing the corrective actions within one business day of this notification; and,
13. All the inspection reports must be signed by the Qualified Inspector.

The Contractor must retain a signed copy of the General Permit GP-0-15-002, NOI, SWPPP,

signed MS4 SWPPP Acceptance form, NOI Acknowledgment Letter, the SCP, and all original inspection reports required by this general permit at the construction site in a prominent place for public viewing from the date of initiation of construction activities to the date of final stabilization and the Notice of Termination (NOT) has been submitted to the NYSDEC and NYCDEP. These documents must be made available to the permitting authority upon request.

In addition, the Contractor and Subcontractors must identify at least one person who is an employee of the company that will be responsible for a day to day implementation of the SWPPP. The name and telephone number of this person should be listed in the SWPPP. This person must be known as the Trained Contractor and must have received a DEC-endorsed four (4) hours of Erosion and Sediment Control training. After receiving the initial training, the Trained Contractor must attend a four (4) hours training every three (3) years. The Contractor must ensure that at least one Trained Contractor is on site on a daily basis when soil disturbance activities are being performed.

Performing implementation of a SWPPP on a permitted construction project without a Trained Contractor on site daily is a violation of Part III.A.6 of the SPDES General Permit. Stormwater controls must be maintained in good operating condition until all disturbed soils are permanently stabilized. Control devices in need of repair should be repaired promptly after identification.

Once construction is completed, the Contractor must submit the NYSDEC Notice of Termination (NOT) to DEP for the MS4 acceptance signature. If required, the Contractor shall prepare a Stormwater Maintenance Permit application consisting of the NOT, as-built plan(s), operation and maintenance manual that designates the entity responsible for long term maintenance of SMPs, and any required fees as specified in the NYCDEP MS4 Stormwater Rule. NYCDEP may inspect the SMP(s) at any time and any deficiencies must be resolved by the Contractor at no additional cost to the City. Prior to filing of the Notice of Termination (NOT), or at the end of the permit term, the Contractor must have the Qualified Inspector perform a final site inspection. The Qualified Inspector must certify that the site has undergone final stabilization using either vegetative or structural stabilization methods and that all temporary erosion and sediment controls (such as silt fencing) not needed for long term erosion control have been removed. Subsequently, the Contractor must submit a complete NOT to the Engineering Support Unit to terminate the permit coverage.

Additionally, the Qualified Inspector must identify all permanent Stormwater management structures that have been constructed and provide the owner(s) of such structures with a manual describing the operation and maintenance practices that will be necessary in order for the structures to function as designed after the site has been stabilized.

The Qualified Inspector must also certify that the permanent structures have been constructed as described in the SWPPP.

9.30.6. STABILIZATION.

The Contractor must initiate stabilization measures by the end of the next business day in areas of the site where construction activities have temporarily or permanently ceased and completed within fourteen (14) days from the date the current soil disturbance activity ceased. For construction sites that directly discharge to one of the 303(d) segments listed in the Appendix E of the General SPDES permit, the application of soil stabilization measures must be initiated by the end of the next business day and completed within seven (7) days from the date the current soil disturbance ceased.

9.30.7. CONTRACTOR'S LIABILITY.

The Contractor must be liable for any discharge that either causes or contributes to a violation of water quality standards as contained in Parts 700 through 705 of Title 6 of the Official Compilation of Codes, Rules and Regulations of the State of New York. Should any stormwater runoff from the site violate the water quality standards, the Contractor will be directed to take immediate steps, at the Contractor's own expense, to rectify the situation and prevent any further sediment from entering the storm sewer system.

In the event that pollutants are discharged to the stormwater system due to the Contractor's negligence, the Engineer will direct the Contractor to cease any or all construction activities contributing to the release of these pollutants. The Contractor must be held responsible, at the Contractor's own cost, for any and all necessary actions to remedy the damage.

Furthermore, failure of the Contractor and Sub-contractor(s) to strictly adhere to any permit requirements must constitute a permit violation that could result in substantial criminal, civil, and administrative penalties.

It is the Contractor's responsibility to pay all the SPDES permit fees which must consist of the yearly regulatory fee, the initial authorization fee per acre of land disturbed and per acre of future impervious area. The Contractor must be liable for all penalties incurred due to the Contractor's failure to pay these fees on time.

9.30.8. MEASUREMENT AND PAYMENT.

Payment will be made at the lump sum price bid for the item Stormwater Pollution Prevention, which must include, but not be limited to, the cost of furnishing all the labor, materials, fees, permits and testing required to provide and construct all erosion and sediment control devices in accordance with the approved SWPPP; providing a Qualified Inspector to design, report, inspect and monitor the work; comply with NYSDEC permitting requirements and all necessary incidentals to complete the work all in accordance with the specifications and the directions of the Engineer.

Ten percent (10%) of the lump sum price bid will be paid when both NYSDEC and NYCDEP have issued a permit identification number and SCP for the project, respectively.

Seventy percent (70%) will be paid in proportion to the percentage of construction completion.

Twenty percent (20%) will be paid when the operation is demobilized and removed from the site, the Notice of Termination (NOT) is filed with NYSDEC and all SPDES permit fees have been paid.

Payment will be made under:

Item No.	Item	Pay Unit
ESCR-9.30	STORMWATER POLLUTION PREVENTION	L.S.

SECTION ESCR-5 – CONSTRUCTION AND DEMOLITION WASTE MANAGEMENT

1.01 DESCRIPTION

This section specifies the sustainability compliance and documentation requirements. Specific sustainable design strategies incorporated into the Project include, but are not limited to:

A. Waste Management and Recycling
B. Use of Materials with Recycled Content
C. Use of locally-manufactured materials
D. Use of low-emitting materials
E. Use of certified wood products
F. Lead Reduction

1.02 RELATED DOCUMENTS

A. S-Pages Article “Greenhouse Gas Emissions”
B. S-Pages Article “Revisions: Specifications and Contract Drawings”
C. FLOODWALL-Pages Section ESCR-6.27
D. HAZ-Pages Section ESCR 8.01
E. GENERAL-Pages Section ESCR 9.30

1.03 SUBMITTALS

Item No.	Paragraph No.	Submittal	Action
1	3.01.A	Compliance Documentation in accordance with NYS Governor’s Executive Order 111	For Information
2	3.01.B	Sustainable Materials Submittal Form	For Information
3	3.01.C.9	Waste Management and Recycling Plan	For Approval
4	3.01.C.10	Monthly Recycling Reports	For Information
5	3.02.A	Environmental Performance Records	For Approval

1.04 CITED STANDARDS

A. New York State Governor’s Executive Order 111 “Green and Clean” State Buildings and Vehicle Guidelines
B. United States Green Building Council (USGBC) green building assessment: Leadership in Energy and Environmental Design, LEED-NC, Version 2.2
C. Environmental Protection Agency Comprehensive Procurement Guidelines
D. Forest Stewardship Council (FSC) for Certified Wood
    a. “FSC Principles and Criteria of Forest Stewardship”
E. Green Seal Environment Standard for Paints
    a. GS-11 Top Coat Paints
    b. GC-03 Anti-corrosive and Anti-rust paints

F. South Coast Air Quality Management District (SCAQMD) Rules and Regulations
    a. Regulation XI, Rule 1113 – Architectural Coatings
    b. Regulation XI, Rule 1168 – Adhesive, Sealant, and Sealant Primer Applications
G. Bay Area Air Quality Management District (BAAQMD) Rules and Regulations
    a. Regulation 8, Rule 51 – Adhesive and Sealant Products
H. US Environmental Protection Agency/US Department of Energy (EPA/DOE) Energy Star Program
I. Federal Trade Commission (FTC) Guides for the Use of Environmental Marketing Claims
    a. 16 CFRR 260.7(e) – Recycled Content
J. Environmental management systems consistent with ISO (International Organization for Standardization) 1401

PART 2 PRODUCTS [not used]

PART 3 EXECUTION

3.01 RESPONSIBILITIES

The Contractor shall implement relevant criteria in accordance with NYS Governor's Executive Order 111 'Green and Clean" State Buildings and Vehicles Guidelines and submit supporting documentation to demonstrate compliance. At least 15% of all Project materials, supplies, and equipment must meet the cited standards in 1.04. Contractor must provide calculation of the percentage of the total project materials by cost, weight, or volume. Contractor must provide all material/supplier tracking forms and/or spreadsheets. At least 5% of all Project materials must include recycled content as described in ISO 14021. Contractor must provide percentage of reused or recycled materials by weight, volume, or cost. Additionally, the Contractor must provide inventory of specifications of materials containing recycled content. Inventory must include the name of the product, the name of the manufacturer, the weight, volume, or cost of the material, and the percentage of recycled content (either post-industrial or post-consumer recycled content).

Sustainability Submittal Packages: The Contractor shall designate a member of its team to be responsible for tracking and submitting all sustainability documentation. A Sustainable Materials Form shall be submitted monthly. Electronic copies shall be submitted at the end of the Project including all cumulative data. A sample form is provided at the end of this section. The Form shall include the following information:

A. Breakdown by weight for the materials included in the Contractor's or subcontractor's scope of Work.
B. Percentages by weight of post-consumer and/or post-industrial recycled content in the supplied products
C. Identification of materials manufactured or harvested within a 500-mile radius of the Project site.
D. Identification of Forest Stewardship Council (FSC)-certified wood products
E. Volatile Organic Compound (VOC) content of all interior field-applied adhesives, sealants, paints and coatings.

3.02 WASTE MANAGEMENT AND RECYCLING

A. The Contractor shall minimize the impact to the environment due to waste production from construction activities. Related documents include:

a. Special Provision B7 Greenhouse Gas Emissions
b. Special Provision B16 Revisions: Specifications and Contract Drawings – Cutting & Patching
c. Section ESCR-6.27 Demolition of Structures
d. Section ESCR 8.01 Handling, Transportation and Disposal of Potential and Identified Contaminated and Hazardous Materials
e. Section ESCR 9.03 Stormwater Pollution Prevention

B. The Contractor shall divert fifty percent (50%) of all building demolition and general construction waste from landfills by one or a combination, of the following activities:

- salvage,
- reuse,
- source-separated recycling, and
- co-mingled recycling.

Land clearing debris (including spoils) is exempt.

C. Where practicable, the Contractor shall stockpile and reuse non-contaminated, non-hazardous on-site excavated materials. Beneficial re-use of spoil is to be given priority.

D. The Contractor shall be responsible for recycling the following: cardboards, metals, concrete, brick, asphalt, clean dimensional wood, plastic, plastic film, glass, gypsum board, ceiling tile, carpet, fluorescent lights and ballasts, and field office waste including paper, aluminum cans, glass, plastic and office cardboard.

E. The Contractor shall designate a specific area to facilitate separation of materials for potential salvage, recycling and waste. Recycling and waste bin areas shall be kept neat and clean and clearly marked in order to avoid contamination of materials.

F. The Contractor must develop, submit for approval, and implement a Waste Management and Recycling Plan within thirty (30) days after Notice of Award. The Waste Management and Recycling Plan must contain the following information:

a. Estimate the total proposed jobsite waste to be generated, including types and quantities

b. Proposed alternatives to Landfilling: A list of each materials proposed to be salvaged, reused, or recycled during the course of the Project, the proposed destination for each material and the projected amount (by weight or cubic yards).

c. Materials handling procedures. A description of the means by which any waste material that must be salvaged or reused must be protected from contamination, and a description of the means to be employed in recycling the above materials consistent with the requirements for acceptance by recycling facilities to be utilized.

d. Identify licensed haulers, transfer stations, processors of recyclables, and transportation procedures.

G. The Contractor must maintain records of all recycled materials and submit monthly Recycling Reports. The Reports must include:

a. Project title, name of company completing report, the dates of the period covered by the report, and Contract Number.

b. Include legible copies of the on-site logs, weight tickets, and receipts. Receipts must be from recycling and/or disposal site operators who can legally accept the materials for the purpose of reuse, recycling, or disposal.

c. If mixed C&D waste is sorted off-site, provide documentation from the processor stating that the average percentage of mixed C&D waste they recycle. The documentation must be the latest annual recycling report to the NYS Department of Environmental Conservation pursuant to 6 NYCRR Part 360 regulations, or a letter from the processor containing the equivalent information if the report is not available.

d. In the event that the Contractor cannot fulfill the diversion rate specified, the Contractor must notify the Engineer as soon as possible. The Contractor must provide documentation showing a good faith effort was made to achieve the diversion rate.

e. Report on the disposal of all jobsite waste including:

1. Recycled materials. For each material provide the following:

    a. Amount (in tonnage or cubic yards)

    b. Dates removed from the project site

    c. Receiving party

2. Reused or salvaged materials. For each material, provide the following:

    a. Amount estimated (in tonnage or cubic yards)

    b. Description of actual use

3. Landfilled Material. For each material provide the following:

    a. Amount (in tonnage or cubic yards) of material landfilled from the Project

    b. Dates removed from the jobsite

    c. Identity of the transfer station or landfill

    d. The percentage of each material recycled, reused, salvaged and/or landfilled must be indicated, both for the progress period and cumulatively for the Project. The total percentage of waste diverted from landfilling, both for the progress period and cumulative total, must be clearly indicated.

H. The Contractor must include a waste reduction provision in material purchase agreements requesting that materials and equipment be delivered in packaging made of recyclable materials, that they reduce the amount of packaging, that packaging be taken back for reuse or recycling, and to take back all unused product. The Contractor must ensure that subcontractors require the same provisions in their purchase agreements.

I. The Contractor is encouraged to seek information from all sources in order to minimize disposal costs. There are numerous opportunities to sell or donate salvaged materials and accrue tax benefits (which could accrue to the Contractor). There exist outlets that will pick up, and in some cases buy, recyclable materials.

PART 4 MEASUREMENT AND PAYMENT

4.01 MEASUREMENT AND PAYMENT

No separate payment will be made for complying with the requirements of this section.

SECTION ESCR-6 - CONSERVATION OF WATER AND ENERGY

1.01 DESCRIPTION

These conservation conditions specify sustainability compliance and documentation requirements. Specific construction conservation strategies incorporated into the Project include, but are not limited to:

A. Construction Energy Consumption
B. Construction Water Consumption

1.02 RELATED DOCUMENTS – Not Used

1.03 SUBMITTALS

Submittal No.	Paragraph No.	Submittal	Submittal Type
1	3.01.A	Summary of planning review and identification of strategies to reduce energy consumption	For Information
2	3.01.C	Documentation that strategies have been implemented	For Information
3	3.02.A	Summary of planning review and identification of strategy(ies) to reduce water consumption	For information
4	3.02.C	Calculations of potable water saved	For Information

1.04 CITED STANDARDS – Not Used

PART 2 PRODUCTS - Not used

PART 3 EXECUTION

3.0 RESPONSIBILITIES

The Contractor shall implement strategies to reduce construction energy and water consumption.

3.01 CONSTRUCTION ENERGY CONSUMPTION

A. The Contractor shall participate in at least one (1) planning review to identify and analyze the potential for reducing energy consumption during construction.

B. The Contractor shall implement at least two (2) of the following strategies to reduce construction energy consumption:

a. Tier IV construction equipment or Tier III with Best Available Technology (BAT) for at least 75% of non-road equipment fleet greater than 50 horsepower;
b. Alternative fuels in heavy equipment such as biodiesel for at least 5% of total fuel consumption;
c. Electrified equipment for at least 20% of equipment (vs. gas or diesel engines);
d. Employee commuting programs with incentives (shuttles to transit, ride-share programs, biking facilities, etc.);
e. Reduce purchased energy for workstations (construction trailer/office energy) by 30% for two of the following: (1) lighting; (2) HVAC; (3) plug loads;
f. Purchase green power (RECs) for 30% of workstation energy consumption;
g. Offset electrical consumption by generating 5% renewable energy on site (e.g., solar panels on trailer complex, solar-powered temporary light plant, solar-powered cameras and variable message sign boards); and

h. Reduce overall fuel consumption by 10% through improved planning and logistics. Specific strategies may include:

i. Reduce number of deliveries;

ii. Reduce idle times;

iii. On-site reuse of soils or other materials to decrease truck traffic to and from site (ties into Reduced Excavated Material taken off site);

iv. Reduce on-site trucking – proper logistics planning such as staging material in close proximity to installation location;

v. Schedule acceleration without additional resource consumption;

vi. Waterborne/rail transportation of materials versus trucking (third-party distribution or logistics);

vii. On-site plants (concrete plant/asphalt plant) in lieu of trucking material to the site; and

viii. Prefabrication of design elements.

C. The Contractor will provide all relevant evidence supporting strategies implemented on a monthly basis.

3.02 CONSTRUCTION WATER CONSUMPTION

A. The Contractor shall participate in at least one (1) planning review to identify and analyze the potential for reducing water consumption during construction.

B. The Contractor shall implement at least one (1) of the following strategies to reduce construction energy consumption:

a. High-efficient fixtures in construction trailers or offices (demonstrate a 40% reduction in usage)
b. Monitoring and management (demonstrate team's ability to detect leaks and respond to inefficiencies in the system)
c. Reduce embodied water of materials by reducing waste material (calculate a 10% reduction in material quantities entering the site as new material)
d. Reduced embodied water through material selection (permanent and temporary materials) (Demonstrate how product selection has contributed to reduced potable water consumption by more than 25%)
e. Stormwater harvesting (show 40% savings by using harvested stormwater)
f. Greywater or wastewater effluent reuse (show 40% reuse)
g. Dewatering reuse (show 40% reuse/recycling)

C. The Contractor shall provide calculations of potable water saved per gallon for each strategy as compared to not implementing the strategy over the construction duration.

D. The Contractor shall provide all relevant evidence supporting strategies implemented.

PART 4 MEASUREMENT AND PAYMENT

4.01 MEASUREMENT AND PAYMENT

No separate payment will be made for complying with the requirements of this section.

SECTION ESCR-10 – AIR QUALITY MONITORING

1.1 DESCRIPTION

A. This section specifies the procedures and requirements for Construction Air Quality Monitoring (AQM) and Reporting.

B. Prior to construction commencement, the Contractor must develop and implement a construction AQM plan that will measure air pollutant emissions at selected locations during construction activities. The air quality monitoring plan must be submitted to the Engineer for approval.

C. The AQM plan must specify the monitoring locations, the alert thresholds, the procedures for monitoring, the distribution list for regular air emissions data reports, the course of action for reporting and responding to exceedances of air quality alert thresholds, and maintenance protocols.

1.2 GENERAL REQUIREMENTS

A. It is expected that AQM during construction will be conducted in a minimum of six (6) locations or as determined by the Engineer. It is also expected that the AQM stations will be relocated as necessary during construction to reflect the sequence of construction, as approved and directed by the Engineer. The Contractor will also develop a distribution and action plan for the monitoring data.

B. AQM stations must be maintained to continuously record particulate matter concentrations and meteorological data on a real-time basis. Monitoring must be performed prior to the start of construction to obtain pre-construction background data.

C. Particulate matter ($PM_{2.5}$, and PM_{10}) must be collected continuously, 24-hours a day and 7 days a week, for the duration of the construction period. Meteorological data, which will include barometric pressure, humidity, precipitation, temperature, wind speed, and wind direction, must be collected from stations that include meteorological monitoring equipment.

D. The AQM stations must be configured to obtain the data averaged over 1-minute intervals, and the data will be used to record running 15-minute averages for particulate matter ($PM_{2.5}$ and PM_{10}) monitoring. These 15-minute averages must be compared with the background concentrations to monitor conformance with the applicable allowable limits which would be established as part of the AQM plan and determine any changes in air emissions levels due to construction activities.

E. Annual calibration and maintenance in conformance with the manufacturer's specifications must be conducted for the AQM and meteorological instrumentation.

1.3 AIR QUALITY REQUIREMENTS

A. Construction activity must not increase limits beyond the National Ambient Air Quality Standards.

B. Measures must be taken to reduce pollutant emissions during construction in accordance with all applicable laws, regulations, and building codes, including Local Law 77 of 2003 which requires the use of ULSD and best available technology (BAT):

C. Clean Fuel. Ultra Low Sulfur Diesel (ULSD) fuel must be used exclusively for all diesel engines throughout the construction site, including marine equipment.

D. Dust Control Measures. To minimize dust emissions from construction activities, a dust control plan including a robust watering program is required. This plan must include that all trucks hauling loose material must be equipped with tight-fitting tailgates and their loads securely covered prior to leaving the project area; water sprays must be used for all excavation and transfer of soils to ensure that materials will be dampened as necessary to avoid the suspension of dust into the air. Loose materials (e.g., on-site material storage piles) will be watered or covered. All construction-related dust reduction measures required by DEP's Construction Dust Rules will be implemented.

E. Idling Restriction. In accordance with Title 24, Chapter 1, Subchapter 7, Section 24-163 of the NYC Administrative Code, the local law restricting unnecessary idling on roadways, truck idle time must be restricted to three minutes except for those vehicles that are not using their engines to operate a loading, unloading, or processing device (e.g., concrete mixing trucks) or otherwise required for the proper operation of the engine.

F. Best Available Tailpipe Reduction Technologies. Nonroad diesel engines with a power rating of 50 hp or greater, and controlled truck fleets (i.e., truck fleets under long-term contract with the proposed project), including, but not limited to concrete mixing and pumping trucks, must utilize BAT for reducing diesel particulate matter emissions. Diesel particulate filters (DPFs) have been identified as being the tailpipe technology currently proven to have the highest emissions reduction capability and must be used on all nonroad diesel engines rated at 50 hp or greater, either installed by the original equipment manufacturer or retrofitted. Retrofitted DPFs must be verified by the EPA or the California Air Resources Board. Other technologies proven to achieve an equivalent emissions reduction may also be used.

G. Utilization of Newer Equipment. All nonroad construction equipment with a power rating of 50 hp or greater must meet at least the Tier 3 emissions standard.

H. Diesel Equipment Reduction. the Contractor's means and methods must minimize the use of diesel engines and utilize electric engines to the highest extent practicable. Equipment that should use electric engines in lieu of diesel engines includes, but may not be limited to, welders, compressors, and rebar benders.

1.4 SUBMISSION REQUIREMENTS

A. AQM plan for Engineer's approval.

B. Monthly reports of AQM results, including detailed air quality data at each monitoring location throughout each workday during the monitoring period.

1.5 MEASUREMENT

Air quality monitoring will be measured for payment as the number of months satisfactorily performed, mesured to the nearest month.

No payment will be made for periods where the air quality monitoring is not performed to the requirements of this section, the AQM plan, or as directed by the Engineer.

1.6 PRICE TO COVER

Theunit price bid per month must will incude the cost of furnishing all labor, maerials, equipment, insurance, and other necessary incidentals required to complete the work in accordance with the specifications and the directions of the Engineer.

Payment will be made under:

Item No.	**Item**	**Pay Unit**
ESCR-10	AIR QUALITY MONITORING	MONTH

SECTION ESCR-11 – NOISE MONITORING

1.1 DESCRIPTION

A. This section specifies the procedures and requirements for Construction Noise Monitoring and Reporting.

B. Prior to the construction commencement, the Contractor must develop and implement a construction noise monitoring plan that will continously measure both equivalent (L_{eq}) and maximum (L_{max}) noise levels at selected locations during construction activities. The noise monitoring plan will provide measured noise levels during construction to determine whether construction-generated noise levels do/do not exceed the applicable limits on construction noise in the NYC Noise Control Code.

C. The noise monitoring plan must specify the proposed monitoring locations, the alert thresholds, the procedures for monitoring, a distribution list for regular noise data reports, the course of action for reporting and responding to exceedances of noise alert thresholds, and maintenance protocols.

1.2 GENERAL REQUIREMENTS

A. It is expected that noise monitoring during construction will be conducted at a minimum of four (4) locations, or as required to document the noise requirements below, or as determined by the Engineer. It is also expected that the noise monitoring stations will be relocated as necessary to reflect the sequence of construction and more intensive noise emissions in accordance with the protocol and as directed by the Engineer. The Contractor will also develop a distribution and action plan for the monitoring data.

B. At each noise monitoring location, noise monitoring must be conducted using a Type I or Type II sound level meter that allows for wireless remote data transfer and is capable of measurements using the Fast or Slow time-weighting as described in the NYC Noise Control Code. In the event of construction-induced noise exceeding the alert threshold, a short audio recording must automatically be made, and an email alert must be sent to designated recipients. In the event that the permissible thresholds are repeatedly exceeded, the Contractor must re-evaluate and adjust the Contractor's construction methods before proceeding.

C. Noise monitoring must be performed as follows at each location:

1. Prior to the start of all construction activities to obtain baseline levels; and
2. During construction to continuously monitor conformance with allowable limits and determine any changes in noise levels due to construction activities.

1.3 NOISE REQUIREMENTS

A. Pile installation activities associated with the floodwall and closures structures that are within 50 feet of any residences, must produce no more than an 80 dBA Lmax noise level (i.e., sound pressure level) at a distance of 50 feet.

Pile installation activities, where feasible and practicable, must be limited to between the hours of 7 AM and 6 PM. This excludes any activities that need to occur adjacent to the FDR Drive where work needs to be conducted during night time as per DOT's OCMC requirements.

B. For construction activity that will occur during night-time (i.e., 6 PM to 7 AM) and weekend hours within 50 feet of any residence, the Leq(1) noise level resulting from construction

must not exceed 80 dBA as measured at the exterior façade of any residential dwelling unit.

C. Quieter equipment models for cranes, generators, compressors, and lifts that result in up to a reduction in noise levels may be necessary to achieve the noise requirements above.

D. Using barging for deliveries of construction materials (including concrete) and importing of fill to the project sites, rather than trucks on roadways to from the construction work areas may be necessary to achieve the noise requirements above.

E. Construction equipment that would operate on barges or within the river would be required to comply with all of the same regulations and commitments as on-land equipment that are subject to the New York City Noise Control Code.

1.4 SUBMISSION REQUIREMENTS

A. Noise monitoring plan for Engineer's approval.

B. Monthly reports of noise monitoring results, including detailed noise level data at each monitoring location throughout each workday during the monitoring period.

1.5 MEASUREMENT

Noise monitoring will be measured for payment as the number of months satisfactorily performed, mesured to the nearest month.

No payment will be made for periods where the noise monitoring is not performed to the requirements of this section, the noise monioring plan, or as directed by the Engineer.

1.6 PRICE TO COVER

Theunit price bid per month must will incude the cost of furnishing all labor, maerials, equipment, insurance, and other necessary incidentals required to complete the work in accordance with the specifications and the directions of the Engineer.

Payment will be made under:

Item No.	Item	Pay Unit
ESCR-11	NOISE MONITORING	MONTH

SECTION 6.40 CR - ENGINEER'S FIELD OFFICE

1.0 DESCRIPTION

The Contractor shall provide, furnish and maintain a fully equipped field office for the exclusive use of and occupancy by the Department's engineering personnel and/or Supervising Consultant (herein after called "City personnel"), and by the engineering personnel of private utilities when specified. The field office shall be at a location approved by the Engineer and shall be a commercial building, store front, or with the approval of both Office of Construction Mitigation and Coordination (OCMC) and the Community Board it may be a mobile trailer(s). If a trailer is used it shall be subject to approval by the Engineer, and all necessary permits shall be obtained by the Contractor. The Contractor may have facilities in an adjoining area separated by a lockable door, provided such facilities are in a location approved by the Engineer. The field office shall be within 1/2 mile of either the North or South Interceptor gate chambers at a location approved by the Engineer. Field offices located more than 1/2 mile from either the North or South Interceptor gate chambers shall require approval by the Engineer.

The field office structure and occupancy thereof shall conform to the requirements of all laws, rules, regulations and orders applicable to it.

The field office and all equipment, except as otherwise specified, may be new materials or may be used materials in good condition and satisfactory to the Engineer.

2.0 MATERIALS

2.0.1 General Construction

The Engineer's Field Office shall be in an approved and weatherproof building. It shall have a minimum ceiling height of seven (7') feet and be partitioned to provide the number of rooms required for the type of office specified. Floor space shall be subdivided into work areas based on a floor plan provided by the City to the Contractor upon notification of space availability.

2.0.2 General Facilities

The field office shall contain or have the following facilities incorporated:

1. Lighting - Electric light, non-glare type luminaries to provide a minimum illumination level of 100 ft.- candles at desk height level.
2. Heating and Cooling - Adequate equipment to maintain an ambient air temperature of 70° F. +/-5°.
3. Electrical Energy Outlets- In accordance with all applicable codes and placed as necessary.
4. Toilet - A separate enclosed room, properly ventilated per code and complying with applicable sanitary codes shall contain a lavatory with running hot and cold water, flush-type toilet, mirror, electric hand dryer, and paper towel dispenser.
5. Showers - Shower facilities, with attached dressing rooms, shall be provided adjacent to the restrooms. The shower rooms shall have a ventilation and heating systems, separate locked doors, and privacy curtains.
6. Potable Water - Potable water supplied from an existing system or five (5) gallon capacity water cooler of a type to be approved by the Engineer shall be provided for use by City personnel. Replacement bottles of water shall be provided by the Contractor, when required.

7. Signs - Store front locations shall have a window graphic sign in black and white lettering with the following inscription. Other locations shall have a wood or metal sign affixed on the outside wall of the building with the following inscription painted in black block lettering on a white background. Paints shall be approved exterior enamels

CITY OF NEW YORK	**2-1/2"**
DEPARTMENT OF DESIGN AND CONSTRUCTION	**3-1/2"**
INFRASTRUCTURE	**2-1/2"**
RESIDENT ENGINEER'S FIELD OFFICE	**2-1/2"**

8. Electric Refrigerator - five (5) cubic feet minimum capacity for use by City personnel.
9. Microwave, Toaster Oven and Coffee Maker - Basic reheating kitchen equipment or approved appliances for use by City personnel.
10. Windows and Doors - All windows and doors shall be weatherproof and each equipped with adequate locking devices. Each window shall be equipped with vertical blinds. Exterior doors shall be provided with two (2) separate "high security" dead bolt type cylinder locks, keyed alike, and three (3) keys shall be furnished for each lock. All windows and doors shall be alarmed with an audible alarm system with signals sent to a 24-hour security response service.
11. Partitions - Partitions for work space enclosures shall be either permanent walls or of the modular type similar to Herman Miller's standard fabric covered line.
12. Kitchen Sink - Mechanism to provide non-drinking, hot and cold, running water.

2.0.3 Office Equipment

1. Pencil Sharpener - One standard pencil sharpener for use by City personnel.
2. Telephone Answering Machine - The telephone answering machine to be provided shall be an electronic digital voice machine with emergency call forwarding capability. It shall be operable twenty-four (24) hours per day and, when unattended, shall transmit to the caller the dolling message:

   "You have reached the Field Office of the New York City Dept. of Design and Construction. No one is here now. We check our incoming messages frequently. We will get back to you as soon as possible. Please leave your name, message and phone number where you may be reached. In case of emergency, call the New York City Hotline at 311. Again, the emergency number is 311."

   All electronic voicemail messages shall be automatically forwarded as email attachments, to allow for the voicemails to be played remotely.

2.0.3.1 Computer Equipment

Computers furnished by the Contractor for use by City Personnel, for the duration of the contract, shall be in accordance with Table 1 - ADDITIONAL SPECIFIC REQUIREMENTS, contained herein, and shall meet the following minimum requirements:

Personal Computer(s) - Workstation Configuration

1. Make and Model: Dell; HP; Gateway; Acer; or, an approved equivalent. (Note: an approved equivalent requires written approval of the Assistant Commissioner of ITS.)

2. Processor: i5 (4MB Cache, 3.0GHz) or faster computer - Dual Processor.
3. System Ram: Minimum of 16GB (Gigabytes) Dual Channel DDR3 SDRAM at 1333MHz - 2 DIMMSs
4. Hard Disk Drive(s): 500 GB (Gigabytes) Serial ATA (7200RPM) w/DataBurst Cache, or larger.
5. CD-RW: Internal CD-RW, 48x Speed or faster.
6. 16X DVD+/-RW: DVD Burner (with double layer write capability) 16x.Speed or faster
7. 1/0 Ports: Must have at least one (1) Serial Port, one (1) Parallel Port and three (3) USB Ports.
8. Video Display Card: HD Graphics (VGA, HDMI) with a minimum of 64 MB of RAM.
9. Monitor: 22" W, 23.0 Inch VIS, Widescreen, VGAJDVI LCD Monitor.
10. Available Exp. Slots: System as configured above shall have at least two (2) full size PCI Slots available.
11. Network Interface: Integrated 10/100/1000 Ethernet card.
12. Other Peripherals: Optical scroll Mouse, 101 Key Keyboard, Mouse Pad and all necessary cables.
13. Software Requirements: Microsoft Windows 10 Professional SP1, 32 bit or 64 bit; Microsoft Office Professional 365; Microsoft Project 365; Basic Adobe Acrobat Package; Anti-Virus software package with 4 year updates subscription; and, either Auto Cad LT or Microsoft Visio Standard Edition, as directed by the Engineer.

All field offices requiring computers shall be provided with the following:

1. One (1) broad-band internet service account. Wideband Internet connectivity at a minimum throughput of 15 Mbps download and 50 Mbps upload is required. Telephone service should be bundled together with Internet connectivity. Because of throughput requirements Verizon FIOS is the preferred connectivity provider where available.

   This account will be active for the life of the project. The e-mail name for the account shall be the DOC Field Office/project Id (preferably Gmail or Outlook - e.g., SANDRESPC@gmail.com).
2. All necessary Cabling.
3. Storage Boxes for and Blank CDs/DVDs.
4. UPS/Surge Suppressor combo.

All computers required for use in the Engineer's Field Office shall be delivered, installed, and setup in the Field Office by the Contractor.

All Computer Hardware shall come with a three (3) year warranty for on- site repair or replacement. Additionally, and notwithstanding any terms of the warranty to the contrary, the Contractor is responsible for rectifying all computer problems or equipment failures within one (1) business day.

An adequate supply of blank CDs/DVDs, and paper and toner cartridges for the printer shall be provided by the Contractor and shall be replenished by the Contractor as required by the Engineer.

It is the Contractor's responsibility to ensure that electrical service and phone connections are also available at all times; that is, the Field Office Computer(s) is to be powered and turned on twenty-four (24) hours each day.

Broadband connectivity is preferred at each field office location. Please take into consideration that an extra phone line dedicated to the modem must be ordered as part of the contract unless Internet broadband connectivity, via Cable or DSL, is available at the planned field office location. Any questions regarding this policy should be directed to the Assistant Commissioner of Information Technology Services at 718-391- 1761.

2.0.3.2 Data Access

Electronic access to the Equipment Watch Retail Rental Rates database (formerly known as The AED Green Book published by Equipment Watch), shall be provided.

2.0.4 Field Testing Equipment

1. 2 - Air Entrainment Meters - Pressure Type, with carrying case for use by City personnel. Each meter shall be capable of producing an accurate test result in approximately five (5) minutes and shall comply with ASTM Designation C 231.
2. 2 - Slump Test Sets - Slump cone and test sets conforming to the requirements of ASTM Designation C 143, complete with rod and scoop for use by City personnel.
3. Thermometers: For use by City personnel.

- 1 - Minimum-maximum thermometer.
- 3 - Asphalt thermometers of stainless steel construction with an accuracy of 0.5% of the full scale, able to measure temperatures from 50 to 500 degrees F. in 5 degree increments.
- 3 - Surface Thermometers able to measure temperatures of flat surfaces similar to Sargent- Welsh Model S81441-D, or an approved equivalent.

4. Nonsparking Pinch Bar - For use in opening manholes.
5. Gas Meters - For use in detecting the presence of explosive gases and vapors for use by City personnel.
6. Straight Edge - One 10 foot long straight edge for use by City personnel in detecting pavement surface tolerance.
7. 48" Smart Level - For use in determining pedestrian ramp and sidewalk slopes.
8. Chlorine Test Kits - For testing residual chlorine levels following water main flushing.
9. Green Florescent Power Trace Dye - For testing sewer connections.
10. 10 - One Million Candlepower Rechargeable Flashlights.
11. Distance Measuring Wheel - For measuring long distances.

3.0 SPECIFIC REQUIREMENTS FOR ENGINEER'S FIELD OFFICE

In addition to the general requirements, the Field Office shall have a minimum floor area of 10,000 SF, calculated based on usable area only, excluding any loss factors. Loss factors are defined as those areas such as lobby, sidewalk, window ledge, elevator shafts, and stairways. The Contractor shall provide and maintain furnishings for each type of Field Office in the quantity specified in Table 1. The furnishings shall be new or used equipment satisfactory to the Engineer.

The office shall have a minimum of two outside doors and four windows.

The Field Office shall be partitioned to provide thirty-five (35) rooms, one of which shall be at least 150 s.f. in area (for use by private utilities).

TABLE 1

ADDITIONAL SPECIFIC REQUIREMENTS

SPECIFIC REQUIREMENTS	TYPE CR
Minimum useable floor space (Square Feet) †	10,000
Office desks, at least 4'-8" x 2'-8", with drawers, locks, and keys.	20*
Swivel chairs, with arms, for the above.	20*
Office folding chairs, metal, with padded seats and backs.	20**
Steel supply cabinets (approximate size 72" high by 36" wide by 18" deep), with four adjustable shelves, tumbler lock and 3 keys.	2
Fire resistant cabinet, 4-drawer, legal size with lock and three (3) keys, meeting the requirements for "Filing devices, Insulated (36 E 9)" Class D Label, of the Underwriters' Laboratories, Inc. Specifications.	3***
Individual lockers (17" wide x 18" deep x 72" high) with flat key locks and two (2) keys each.	10
Calculating machines, tape type with digital display registering at least ten (10) digits.	20*
Standalone networked color laser printer carriage, standard 16	1
Waste paper baskets (metal, approximately 12" square by 16" high).	20
Fire extinguishers, non-toxic, dry chemical type meeting Underwriters Laboratories, Inc., approval for Class A, Class B and Class C fires with a minimum rating of 2A:lOB:10C.	3****
First Aid Kit kept properly stocked with appropriate first aid supplies at all times.	2
Drafting tables (3'-0" x 5'-0") with storage drawers and stool.	3****
Photocopying Machine – Stand-alone, heavy duty, electric, dry-process color photocopying type with color scan and send capability via e-mail, a minimum production rate of 70 pages per minute and an adequate supply of copy paper, toner, etc. The machine shall be capable of duplex copying paper sizes of 8-1/2 x 11 inches, 8-1/2 x 14 inches and 11 x 17 inches, and have separate trays for each paper size. It shall have a document feeder, collator, stapler, and the capability to reduce/enlarge copies between each paper size. The supply of each size copy paper, toner, etc. shall be replenished and the machines shall be maintained for the duration of the contract by the Contractor as required by the Engineer. Make and model can be Minolta, Canon, IBM, Epson, or an approved equivalent, and shall be networked to the office computers for printing capability.	1
Standalone networked color laser printer. (Not required if photocopying machine prints in color)	1
Vertical filing plan racks for six sets of 22"x36" plans each rack.	3****
Telephone lines for calls with no territorial limitation including international calling, where one shall be dedicated for the Fax Machine, one for each computer	

SPECIFIC REQUIREMENTS	TYPE CR
fax/modem and the others for telephone instruments.	10‡
Telephone instruments.	10
Telephone answering machine.	1
Fax Machine – With an adequate supply of copy paper, toner, etc. The supply of copy paper, toner, etc. shall be replenished and the machines shall be maintained for the duration of the contract by the Contractor as required by the Engineer.	1
Personal Computer – Workstation Configuration	20

3.0.1 Construction Methods

The building shall be fully equipped and made available for use and occupancy by the Department's personnel and/or Supervision Consultant not less than thirty (30) days prior to the start of any contract work.

The building interior (including access foyers, stairwells, etc.) shall be maintained in good, clean, and sanitary working condition by the Contractor for the duration of the contract. The Contractor shall provide and pay all costs for electrical service, telephone service for calls within New York City limits, hot and cold water, heat and fuel, and daily janitor service. Staples, such as paper towels, hand soap, toilet paper, and similar supplies, shall always be available.

Where necessary, the site for a mobile trailer(s) shall be graded and shoulder stone placed and maintained as directed by the Engineer to provide a parking area for City personnel and, if necessary, an approach road shall be provided. Plumbing work shall include all water supply, drainage and piping required for the operation of a complete installation. Temporary water service shall be provided from an existing main and extended into the trailer and all fixtures requiring water supply shall be properly connected up. All necessary soil, waste, vent and drainage piping shall be provided and connected to the existing sewer or as otherwise directed.

The office, incorporated facilities, equipment, and personal property of the Department's employees shall be protected by the Contractor against loss or damage from fire, theft, or other causes, at all hours of the day and night. The Contractor shall provide fire insurance, extended coverage and vandalism, malicious mischief and burglary, and theft insurance coverage in the amount of forty thousand dollars ($40,000.00) for office equipment of the City of New York in the Engineer's field office and for property of City personnel that is used in the contract work and stored in the office. All insurance coverage shall be written by a company approved by the Commissioner and payable in case of loss to the City of New York. The office shall be maintained by the Contractor in first class condition until final acceptance of the work.

At the direction of the Engineer, any equipment on the above lists may be deleted. The Engineer may direct that other equipment of equivalent value be supplied by the Contractor or an appropriate credit be taken for the value of equipment not provided.

When directed by the Engineer, the Contractor shall disconnect all services and remove and dispose of all temporary installations from the site, including fencing, surfacing and utilities, the area shall then be cleaned, loamed and seeded if required and left in a neat and acceptable condition. On and after the date of the Engineer's Final Acceptance, the temporary structure and all installed equipment shall become the property of the Contractor, and shall be disposed of, by the Contractor, away from the site of the work. Engineer's Final Acceptance shall be when the Contractor has completed all punch list work and Official Completion Date has been set.

4.0 NON-CONFORMANCE

No payment will be made under Engineer's Field Office for. each. calendar day during which there are deficiencies in compliance with the requirements of any subsection of this specification. The first calendar day shall commence twenty-four (24) hours after notice to the Contractor of such a deficiency. This non payment shall be deducted from the Contractor's next estimate as a charge.to the Contractor on the item. The amount of such calendar day non-payment will be determined by dividing the unit price bid per month by 30.

In addition, the Contractor may be subject to liquidated damages in accordance with Schedule A.

5.0 MEASUREMENT

The quantity to be measured for payment under this item shall be the number of months that the Field Office is available for occupancy by the Field Engineers during the period of the contract. Payment will begin the first month that the office is fully equipped and accepted, serviced as specified, and made available for occupancy. The Field Office is to be continuously made available and Monthly payments will continue for the duration of the contract through a period not to exceed 6 months past the substantial completion date. When directed in writing by the Commissioner, the Field Office will be provided and paid for a period of time beyond 6 months past the substantial completion date. Payment for each month's occupancy after the date of substantial completion acceptance will be made as part of the final estimate. Monthly payments may be terminated on a specified date prior to acceptance of the contract by written notification by the Engineer that such office will no longer be required on the contract.

6.0 PRICE TO COVER

The unit price bid per month for the item Engineer's Field Office shall include the cost of furnishing all labor, materials, equipment, ground rental, fire and theft insurance, and utility charges necessary to complete the work of providing or constructing the field office; making all necessary electrical, water, sewer, and other connections required to make the above facilities operative; payment ·of all rental costs; furnishing and paying for heating fuel, as required; all electrical energy; private telephone services; staples, as specified; and all necessary incidentals to complete the work - all in accordance with the specifications and the directions of the Engineer.

Payment will be made under:

Item No.	**Item**	**Pay Unit**
6.40 CR	ENGINEER'S FIELD OFFICE (COASTAL RESILIENCY)	MONTH

IG/PC - PAGES

SPECIAL INTERCEPTOR GATES AND PARALLEL CONVEYANCE SPECIFICATIONS

CONTRACT SANDRESPC

The specifications in the Special Interceptor Gates and Parallel Conveyance Specifications (IG/PC-Pages) cover the procurement, fabrication, and construction of the interceptor gates, below-grade interceptor gate chambers, equipment for interceptor gate operation, bypass gates, isolation gate, parallel conveyance, construction methods and associated works as part of the East Side Coastal Resiliency (ESCR) Project.

The IG/PC-Pages supplement the specifications shown on the Specifications and Standards of New York City sheet at the beginning of this Volume 3, which apply to the work except as modified in these Contract Documents.

(NO TEXT ON THIS PAGE)

TABLE OF CONTENTS

Section	Description	Page No.
01 11 00	SUMMARY OF WORKS – IG/PC	1
01 43 10	CONTRACTOR'S WORK QUALITY	7
01 43 15	WITNESS SHOP TESTING	14
01 61 50	GENERAL PRODUCT REQUIREMENTS	20
01 65 00	PRODUCT DELIVERY, STORAGE AND HANDLING	26
01 73 12	MAINTENANCE OF OPS & CONSTRUCTION STAGING	32
01 73 17	INSTALLATION OF EQUIPMENT	37
01 75 10	PRELIMINARY AND FINAL FIELD TESTS	44
01 78 24	SPARE PARTS AND MAINTENANCE MATERIALS	50
01 78 25	OPERATIONS AND MAINTENANCE MANUALS	56
01 79 05	EQUIPMENT START-UP AND TRAINING	62
05 05 23.01	WELDING	68
05 05 23.02	MISCELLANEOUS METAL FASTENINGS	78
05 06 00.01	SCHEDULES FOR STAINLESS STEEL WORK	90
05 50 00	METAL FABRICATIONS	100
05 52 13.05	WELDED PIPE RAILINGS (STAINLESS STEEL)	109
05 53 01.02	STAINLESS STEEL FLOOR GRATINGS	123
09 91 00	PAINTING	129
26 05 00	BASIC ELECTRICAL REQUIREMENTS	152
26 05 20	LOW-VOLTAGE WIRES, CABLES AND ACCESSORIES	161
26 05 33	RACEWAYS AND BOXES FOR ELECTRICAL SYSTEMS	174
26 05 43	UNDERGROUND DUCTS, MANHOLES AND	191
26 05 53	IDENTIFICATION FOR ELECTRICAL SYSTEMS	199
26 05 91	LOW-VOLTAGE ELECTRIC MOTORS	203
26 09 16	ELECTRIC CONTROL RELAYS	218
26 28 13	LOW VOLTAGE FUSES	226
26 29 13	ENCLOSED CONTROLLERS	230
26 29 13.16	LOW-VOLTAGE ENCLOSED MOTOR CONTROLLERS	239
ESCR 51.11C003	CHAMBER NO. 3	250

33 05 05	BURIED PIPING INSTALLATION	255
40 05 05	EXPOSED PIPING INSTALLATION	279
40 05 06	COUPLINGS, ADAPTERS, AND SPECIALS FOR PROCESS PIPING	309
40 05 07	HANGERS AND SUPPORTS FOR PROCESS PIPING	319
40 05 19	DUCTILE IRON PROCESS PIPE	333
40 05 22	STEEL AND STAINLESS STEEL PROCESS PIPE	340
40 05 56	PROCESS VALVES, SMALLER THAN FOUR-INCH DIAMETER	357
40 05 59.01	INTERCEPTOR GATES	365
40 05 59.02	INTERCEPTOR GATE INSTALLATION	447
40 05 59.05	ISOLATION GATE	464
40 05 97	IDENTIFICATION FOR PROCESS EQUIPMENT	472
40 06 20	PIPING AND VALVE SCHEDULE	494
40 60 01	PROCESS MONITORING AND CONTROL SYSTEM	498
40 61 13	PMCS GENERAL REQUIREMENTS	523
40 61 15	PROCESS CONTROL SYSTEM SUBMITTALS	545
40 61 22	TOOLS, SUPPLIES, AND SPARE PARTS FOR CONTROL S	556
40 61 23	SIGNAL COORDINATION REQUIREMENTS	567
40 61 24	QUALITY ASSURANCE FOR CONTROL SYSTEMS	571
40 61 26	PMCS TRAINING	576
40 61 91	PROCESS CONTROL SYSTEM INSTRUMENT LIST	582
40 61 93	PMCS INPUT/OUTPUT LIST	588
40 61 96	PMCS CONTROL STRATEGIES	610
40 66 00	PROCESS CONTROL SYSTEM NETWORKS	622
40 66 53	TELEMETRY SYSTEM	628
40 67 16	PMCS PANELS AND ENCLOSURES	634
40 67 63	UNINTERRUPTIBLE POWER SYSTEMS	652
40 70 00	INSTRUMENTATION FOR PROCESS SYSTEMS	656
40 71 79.14	FLOW SWITCHES (THERMAL)	662
40 73 13	PRESSURE AND DIFFERENTIAL PRESSURE GAUGES	665
40 73 20	PRESSURE TRANSMITTERS	669
40 78 56	ISOLATORS, INTRINSICALLY SAFE BARRIERS, AND	673
40 78 90	PMCS PANEL MOUNTED INSTRUMENTS AND DEVICES	681
40 79 00	MISCELLANEOUS INSTRUMENTS, VALVES, AND FITTINGS	701

40 80 81 PMCS FACTORY TESTING.....709
40 80 82 PMCS STARTUP AND FIELD TESTING 715
43 23 13.02 PUMPING UNITS 724
ESCR-70.13MC MICRO-PILES……..766

(NO TEXT ON THIS PAGE)

SECTION 01 11 00 - SUMMARY OF WORKS

INTERCEPTOR GATES AND PARALLEL CONVEYANCE (IG/PC)

01 11 00 SUMMARY OF WORKS – INTERCEPTOR GATES AND PARALLEL CONVEYANCE

GENERAL

1.09 Summary

A. This Section provides a summary of the principle items of work shown on the Interceptor Gates and Parallel Conveyance (IG/PC) Contract Drawings. The work consists of furnishing all equipment, superintendence, labor, skill, material and all other items necessary for the construction, installation, start-up and testing of the interceptor gates, below-grade interceptor gate chambers, equipment for interceptor gate operation, bypass gates, isolation gate, and parallel conveyance as part of the East Side Coastal Resiliency Project.

B. This Section Includes:

Location and Description of Work

Work Included in the Contract

Related Sections

Inspection before Bidding

Site Characterization Reports and Information

1.10 Payment

A. The Contractor shall be paid the lump sum price bid for completing all the work required to be done per the Contract Drawings and specifications, to the satisfaction of the Engineer. The terms of measurement and payment for each principal item of work is provided in the related specification sections.

B. If, in the opinion of the City, the Contract Drawings, the Interceptor Gates and Parallel Conveyance Specifications, and NYC DEP Bureau of Water and Sewer Operations (BWSO) Standard Sewer and Water Main Specifications are not clear as to (a) the method of performing any part of the work, or as to (b) the types of materials or equipment necessary, or as to (c) the quantities required, in every such situation the Contractor shall be deemed to have based their bid upon performing the work and furnishing materials or equipment in the manner most expensive and costly to the Contractor. If such conflict and/or ambiguities arise, the City will furnish and supply the Contractor with supplementary drawings showing the manner in which the work shall be performed and the type or types of materials or equipment that shall be installed.

C. Payment for the following principal items of work will be made under the following:

Item No.	Item	Pay Unit
ESCR-51.11C003	Chamber No. 3	LUMP SUM
51.11CNIG	NORTHERN INTERCEPTOR GATE CHAMBER	LUMP SUM
51.11CSIG	SOUTHERN INTERCEPTOR GATE CHAMBER	LUMP SUM
ESCR-51.12SG108	North and South Interceptor Gates	LUMP SUM
ESCR-51.12P	Interceptor Gate Spare Parts	LUMP SUM

1.11 Related Sections

A. All Contract Documents, including all other specifications sections in this Contract, will apply to this Section.

B. Specifications sections related to the principal items of work covered under this Contract are organized into the following Sections:

1. COMMON WORKS SECTIONS cover general provisions and requirements that are in addition to NYC DEP BWSO Standard Sewer and Water Main Specifications and the NYC DOT Standard Highway Specifications. The COMMON WORKS SECTIONS include:

   a. 01 43 10 – Contractor's Work Quality

   b. 01 43 15 – Witness Shop Testing

   c. 01 61 50 – General Product Requirements

   d. 01 65 00 – Product Delivery Requirements

   e. 01 73 12 – Maintenance of Operations and Construction Staging

   f. 01 73 17 – Installation of Equipment

   g. 01 75 10 – Preliminary and Final Field Tests

   h. 01 78 24 – Spare Parts and Maintenance Materials

   i. 01 78 25 – Operations and Maintenance Manuals

   j. 01 79 05 – Equipment Start-up and Training

2. APPURTENANT WORKS SECTIONS cover requirements that are in addition to or modify (modifications are noted as such) the NYC DEP BWSO Standard Sewer and Water Main Specifications for appurtenant works required for the complete construction and installation of the principle items of work. APPURTENANT WORKS SECTIONS include:

   a. 05 05 23.01 – Welding

   b. 05 05 23.02 – Miscellaneous Metal Fastenings

   c. 05 06 00.01 – Schedules for Stainless Steel Work

d. 05 50 00 – Metal Fabrications

e. 05 52 13.05 – Welded Pipe Railings (Stainless Steel)

f. 05 53 01.02 – Stainless Steel Floor Gratings

g. 09 91 00 - Painting

h. 26 05 00 – Basic Electrical Requirements

i. 26 05 20 – Low-Voltage Wires, Cables and Accessories

j. 26 05 33 – Raceways and Boxes for Electrical Systems

k. 26 05 43 – Underground Ducts Manholes and Raceways for Electrical Systems

l. 26 05 53 – Identification for Electrical Systems

m. 26 05 91 – Low-Voltage Electric Motors

n. 26 09 16 – Electric Control Relays

o. 26 28 13 – Low-Voltage Fuses

p. 26 29 13 – Enclosed Controllers

q. 26 29 13.16 – Low-Voltage Enclosed Motor Controllers – Reduced Voltage

r. ESCR 51.11C003 – Chamber No. 3

3. SPECIAL WORKS FOR INTERCEPTOR GATES AND RELATED SYSTEMS cover requirements related to the complete furnishing, construction, installation, startup, and testing of the interceptor gate and related systems:

a. 33 05 05 – Buried Pipe Installation

b. 40 05 05 – Exposed Piping Installation

c. 40 05 06 – Couplings, Adapters, and Specials for Process Piping

d. 40 05 07 – Hangers and Supports for process Piping

e. 40 05 19 – Ductile Iron Process Pipe

f. 40 05 22 – Stainless Steel Process Pipe

g. 40 05 56 – Process valves, Smaller than Four-Inch Diameter

h. 40 05 59.01 – Interceptor Gates

i. 40 05 59.02 – Interceptor Gate Installation

j. 40 05 59.05 – Isolation Gate

k. 40 05 97 – Identification for Process Equipment

l. 40 06 20 – Piping and Valve Schedule

m. 40 60 01 – Process Monitoring and Control System (PMCS)

n. 40 61 13 – PMCS General Requirements

o. 40 61 15 – Process Control System Submittals
p. 40 61 22 – Tools, Supplies, and Spare Parts for Control Systems
q. 40 61 23 – Signal Coordination Requirements
r. 40 61 24 – Quality Assurance for Control Systems
s. 40 61 26 – PMCS Training
t. 40 61 91 – Process Control System Instrument List
u. 40 61 93 – PMCS Input/Output List
v. 40 61 96 – PMCS Control Strategies
w. 40 66 00 – Process Control System Networks
x. 40 66 53 – Telemetry System
y. 40 67 16 – PMCS Panels and Enclosures
z. 40 67 63 – Uninterruptible Power Systems
aa. 40 70 00 – Instrumentation for Process Systems
bb. 40 71 79.14 – Flow Switches (Thermal)
cc. 40 73 13 – Pressure and Differential Pressure Gauges
dd. 40 73 20 – Pressure Transmitters
ee. 40 78 56 – Isolators, Intrinsically Safe Barriers, and Surge Suppressors
ff. 40 78 90 – PMCS Panel Mounted Instruments and Devices
gg. 40 79 00 – Miscellaneous Instruments, Valves, and Fittings
hh. 40 80 81 – PMCS Factory Tests
ii. 40 80 82 – PMCS Startup and Field Testing
jj. 43 23 13.02 – Pumping Units

1.12 References

A. Not Used

1.13 Description

A. Location of Work

Work performed under this Contract takes place in the sewershed of the East Side Coastal Resiliency Project, generally from Montgomery St. to the south to 24th St in the north from the FDR Drive to Avenue C, and is further described below:

a. Site #1: “Southern Interceptor Gate”

1) Site Boundaries: The southern interceptor gate chamber and building are proposed just south of Corlear’s Hook Bridge, which is bounded by Jackson Street, Cherry Street and the FDR

Drive adjacent to the Corlear's Hook Park and western edge of the FDR Drive as shown on the Contract Drawings.

b. Site #2: "Northern Interceptor Gate"

1) Site Boundaries: The northern interceptor gate chamber and building are proposed in the right-of-way and median of East 20th Street, between the 20th Street Loop and Avenue C as shown on the Contract Drawings

c. Site #3: "Parallel Conveyance Segments"

1) Parallel conveyance at M-22 and M-23 between FDR Drive and Corlears Hook Park, as shown on Contract Drawings

2) Parallel conveyance at M-27 and M-28 between Grand Street and Delancey Street, as shown on Contract Drawings

3) Parallel conveyance at M-31 at the intersection of Houston Street and Columbia Street, as shown on Contract Drawings

4) Parallel conveyance at M-37 and M-38 between East 18th Street and East 20th Street, as shown on Contract Drawings

5) Parallel conveyance at M-38A between East 20th Street and East 22nd Street, as shown on Contract Drawings

6) Parallel conveyance at M-38B at the intersection of East 23rd Street and FDR Drive, as shown on Contract Drawings

d. Site #4: "Regulator M-39"

1) New isolation gate within regulator M-39 at Asser Levy Playground, as shown on Contract Drawings

B. Work Included in the Contract.

Contract Name: SANDRESPC

Principal Items of Work: The work covered in this and all related sections include, but is not limited to, the reinforcement and structural steel; all sheeting and bracing; pumping; fluming; bridging; breaking down and filling in of abandoned sewer appurtenances; connections; maintaining flow in sewers; backfilling; cleaning up; and furnishing and installing all other items necessary to complete this work and do all work incidental thereto, all in accordance with the plans and specifications, and as directed by the City.

Additionally, included items of work hereunder shall be the installation and testing of equipment used in the operation of the interceptor gates in accordance with the plans, specifications and standards, or as directed by the City.

C. Area Classification

Interceptor Gate Chambers shall be designated as Class I, Division 1 Group D areas. Control panels and electrical enclosures provided for the Manhattan Pump Station shall be NEMA 4 rated. All other locations specified herein shall be designated as indoor wet process areas.

D. Datum Plane

All elevations are as indicated on the Contract Drawings.

1.14 Quality Assurance

A. Not Used

1.15 Submittals

A. Not Used

1.16 Delivery, Storage, and Handling

A. Not Used

1.17 Spare Parts, Special Tools, and Supplies

A. Not Used

1.18 Special Warranty Provisions / Guarantee Periods

A. Not Used

PRODUCTS

B. Not Used

EXECUTION

C. NYC DEP may require work performed in or near its systems and facilities to be performed outside of normal working hours, on weekends, or on holidays. This work shall be done at no additional cost to the City. This may include, but is not limited to, the following:

Flume installation and removal

Interceptor gate system testing and start-up

All work in the Manhattan Pump Station

All connections to existing sewers and interceptors.

D. After each field test using wastewater, the Contractor shall thoroughly pressure wash the chamber, bypass channel, or parallel sewer using clean water at a minimum pressure of 3,000-psi and minimum temperature of 150 degrees F to the satisfaction of the City.

END OF SECTION

01 43 10 CONTRACTOR'S WORK QUALITY

GENERAL

1.01 Summary

A. Section Includes:

Contractor's Quality Assurance / Quality Control Management Plan

Defective Work, Equipment or Materials

Welding Certification and Welding Inspection

Inspection and Testing of Concrete

Leakage Tests

Contractor's Surveyor

1.02 Payment

A. There is no specific Payment provisions for this Section.

1.03 Related Sections

A. Section 01 43 10 – Contractor's Work Quality

B. Section 01 43 15 – Witness Shop Testing

1.04 References

A. AWS – D1.X American Welding Society

B. ASME American Society of Mechanical Engineers

C. NYS Steel Construction Manual

1.05 Description

A. Contractor Quality Assurance / Quality Control Plan

The Contractor shall establish, execute and submit to the Engineer a Quality Assurance / Quality Control (QA/QC) Management plan for the services and operation of equipment which will be supplied under this Contract. The plan shall provide the Contractor with adequate measures for verification and conformance to defined requirements by its personnel and all subcontractors, fabricators, suppliers, and vendors.

B. Defective Work, Equipment or Materials

Any defective or imperfect Work, equipment, or materials furnished by the Contractor which is discovered before the Substantial Completion of the Work, or during the warranty period, shall be removed immediately even though it may have been overlooked by the City and approved for payment. The Contractor shall repair such defect, without compensation, in a manner satisfactory to the City.

Unsuitable materials and equipment may be rejected, notwithstanding that such defective Work, materials and equipment may have been previously overlooked by the City and accepted or approved for payment.

If any workmanship, materials or equipment shall be rejected by the Engineer as unsuitable or not in conformity with the Specifications or Contract Drawings, the Contractor shall promptly replace such materials and equipment with acceptable materials and equipment at no additional cost to the City. Equipment or materials rejected by the Engineer shall be tagged as such and shall be immediately removed from the Site.

The Engineer may order tests of imperfect or damaged Work equipment, or materials to determine the required functional capability for possible acceptance, if there is no other reason for rejection. The cost of such tests shall be borne by the Contractor, and the nature, tester, extent and supervision of the tests will be as determined by the Engineer. If the results of the tests indicate that the required functional capability of the Work, equipment, or material was not impaired, the Work, equipment or materials may be deemed acceptable, in the discretion of the Engineer. If the results of such tests reveal that the required functional capability of the questionable Work, equipment or materials has been impaired, then such Work, equipment or materials shall be deemed imperfect and shall be replaced. The Contractor may elect to replace the imperfect Work, equipment or material in lieu of performing the tests.

If, in the making of any test, it is ascertained by the City that the material or equipment does not comply with the Contract, the Contractor will be notified thereof, and it will be directed to refrain from delivering said material or equipment, or to promptly remove it from the site or from the Work and replace it with acceptable material at no additional cost to the City. Upon rejection of any material or equipment submitted as the equivalent of that specifically named in the Contract, the Contractor shall immediately proceed to furnish the named material or equipment.

All welding must conform to the requirements of Specification Section 05 05 23.01 – Welding, and all other welding requirements as applicable and as determined by the Engineer.

C. Inspection and Testing of Concrete

Inspection and testing of concrete shall be in accordance with NYC Department of Environmental Protection (DEP) Bureau of Water and Sewer Operations (BWSO) Standard Sewer and Water Main Specifications.

D. Leakage Tests

All new pipelines and appurtenant structures and all new liquid containing structures shall be field tested for leakage after installation in accordance with NYC DEP BWSO Standard Sewer and Water Main Specifications.

E. Contractor's Surveyor

The Structures and Equipment Contractor shall retain the services of a licensed land surveyor, registered in the State of New York, to perform survey work including but not limited to establishing line and grade, in advance of the construction; and to perform other surveying services for the Work included under the Contract. The surveyor shall be subject to the approval of the City. Survey drawings shall be submitted to the Engineer for approval.

The Contractor shall erect, install and maintain survey platforms, targets, benchmarks and similar facilities to be used by the Engineer in the performance of its inspection services; shall perform all survey work required before, during and after construction; and shall be in accordance with NYC DEP BWSO Standard Sewer and Water Main Specifications.

1.06 Quality Assurance

A. A Quality Management Plan must be submitted for review and approval.

1.07 Submittals

A. Quality Assurance / Quality Management Plan

Within 15 days after the commencement work date given in the Notice to Proceed (NTP), the Contractor shall provide its QA/QC management plan to the Engineer for approval. The Engineer's review and acceptance of the Contractor's QA/QC plan shall not relieve the Contractor from any of its obligation to perform the Work.

Inspection of the Work by the City is made solely for the benefit of the City. The inspection of the Work shall not relieve the Contractor of any of its obligations to fulfill the Contract as herein prescribed, and defective Work shall be repaired or replaced at the Contractor's sole expense. The Contractor's assigned QA/QC personnel are subject to the City's review and continued acceptance. No Work covered by the QA/QC plan shall start until the Engineer's written acceptance of the Contractor's QA/QC plan has been obtained.

The QA/QC plan should consist of the following quality elements:

a. Roles & Responsibilities, communication protocols

b. Management and Production Inspections

c. Off-Site Supplier Quality

d. Vendor Capability Inspections

e. Notification & Coordination with the City

f. Inspection Instructions

g. Traceability

h. Pre-Activity Meeting

i. Initial Inspections

j. Witness Shop Testing & QA Inspections

B. QA Acceptance / Shipping / Material Marking & Identification

On-Site Receiving & Materials / Equipment Control

Material / Equipment Receiving

CMTRs / Certificate of Compliance

Traceability

On-Site Storage, Care, & Maintenance

QA/QC Process and Operational Procedures

Submittal Management

Request for Information (RFI)

C. Five-Phases of Inspection Procedures

Phase 1 – Client Pre-Activity Meeting

Phase 2 – Initial Inspections

Phase 3 – On-Going Inspections

Phase 4 – Witness Shop Test Inspection and QA Inspections

Phase 5 – Final Inspections – Punch lists

D. Inspection and Test Plan (ITP)

Build Work Plan Procedure

Checklist & Hold Point Procedure

Witness and Hold Points

Control of Measuring & Calibrated Test Equipment Procedure

Reporting and control non-conforming work

E. Control & Responsibility

Non-Conformance Reporting (NCR) Disposition

QC Verification

Documentation

F. Root Cause Analysis (RCA) Process

Thresholds for RCA

Process

Preventive Action Plan

Implementation

Measurement of Effectiveness

G. Continuous Improvement

Recognition and Accountability

Measurement and Monitoring

Performance & Issues Matrix

Management Reviews

Audit and Assessments

H. Welding Control

Full Compliance with Specifications and Applicable Codes

I. Additional Submittals

The Contractor shall submit the following information prior to entering into a supply or service subcontract.

Contract number, supplies or services to be provided and a general description of the proposed item(s), such as trade name, type, etc. The name and address of the manufacturer or Service Company and the location of the plant at which supplies will be manufactured and tested as required, or at which the services will be performed.

Experimental and test data required to support the claimed performance of the supplies.

A description of the testing plant, including the hydraulic, electrical and other facilities, in sufficient detail to show that the plant is adequately equipped for performing the tests, if such testing is required.

J. Any additional information that the Engineer may deem necessary in order to determine the ability of the supply or service company to produce the item as called for by the Specifications.

1.08 Delivery, Storage, and Handling

A. All materials & equipment must be received, stored in a safe & adequate environment as per approved procedures.

1.09 Spare Parts, Special Tools, and Supplies

A. Not Used

1.10 Special Warranty Provisions / Guarantee Periods

A. Not Used

PRODUCTS

1.11 Manufacturers

A. Not Used

1.12 Materials / Equipment

A. All work of assembly, installation, and construction shall be done in a neat, first class, and workman like manner. If the quality of the material, fixtures, fittings, supplies, equipment or work required by the Contract Drawings does not agree with that required by the Specifications, the better quality shall be supplied. In asking for prices on, or placing orders for, materials, fixtures, fittings, supplies, and equipment intended for use or installation under this Contract, the Contractor shall provide the manufacturer or dealer with such complete information from these Specifications as may in any case be necessary. In every case, it shall quote in full to each such manufacturer or dealer the text of this subparagraph, as well as the text of such other portions of the contract, as are appropriate.

1.13 Fabrication / Assembling / Finishes

A. Not Used

1.14 Source Quality Control / Shop Tests

A. Not Used

EXECUTION

1.15 Examination / Preparation

A. Notice of Intent to Commence Manufacture

The Contractor shall give notice in writing to the Engineer sufficiently in advance of its intention to commence the manufacture or preparation of materials especially manufactured or prepared for use in or as part of the permanent construction as detailed in Section 01 43 10 – Contractor's Work Quality and Section 01 43 15 – Witness Shop Testing. Such notice shall contain a request for inspection, the date of commencement and the expected date of completion of the manufacture or preparation of materials. Upon receipt of such notice, the City will: arrange to have a representative present at such times during the manufacture as may be necessary to inspect the materials; or notify the Contractor that the inspection will be made at a point other than the point of manufacture; or notify the Contractor that inspection will be waived.

In those instances, where the City inspector(s) arrive at the agreed-upon location, at the agreed-upon date and time, and find that the article(s) to be inspected are not ready for inspection, the inspector(s) shall return to their home office and all expenses incurred shall be borne by the Contractor and shall be deducted from the Contractor's next payment, unless otherwise determined by City.

B. Field Measurements

The Contractor shall take all necessary measurements in the field to determine the exact dimensions for all Work required and verify all pertinent data and dimensions shown on the Contract Drawings prior to shop drawing submissions and construction.

1.16 Implementation

A. Not Used

1.17 Field Testing / Quality Control

A. Not Used

1.18 Startup / Demonstration

A. Not Used

1.19 Adjusting / Protection / Cleanup

A. All materials and equipment must be protected & wrapped during transport, storage & post installation.

END OF SECTION

NO TEXT ON THIS PAGE

01 43 15 WITNESS SHOP TESTING

GENERAL

1.01 Summary

A. The Contractor shall provide all labor, materials, equipment, incidentals, and appurtenances as shown, specified, and required, to perform all Witness Shop Tests. The Contractor shall be responsible for all expenses for scheduled Witness Shop Testing.

B. The following schedule is a part of this Section:

Schedule 01 43 15–1 Witness Shop Test Schedule.

1.02 Payment

A. No separate payment will be made for performing any Work required under this Section

1.03 Related Sections

A. Section 01 43 10 – Contractor's Work Quality

B. Additional sections from Common Works (Division 01), General Requirements, as applicable.

C. Section 40 05 59.01 – Interceptor Gates

D. Section 40 05 59.02 – Interceptor Gate Installation

E. Section 40 05 59.05 – Isolation Gates

1.04 References

A. Not Used

1.05 Description

A. All equipment listed in Schedule 01 43 15-1, Witness Shop Test Schedule shall undergo witness shop testing as specified.

B. Witness Shop Testing of Additional Items: The City reserves the right to require Witness Shop Tests for additional items that are not listed in Schedule 01 43 15-1 or designated as requiring Witness Shop Tests in the Contract Documents.

C. Advance Notice for Witness Shop Testing:

The Contractor shall notify the Engineer in advance of all scheduled witness shop tests as follows:

a. Thirty consecutive calendar days (30 ccd) in advance for witness shop tests in the continental United States.

b. Sixty consecutive calendar days (60 ccd) in advance for witness shop tests outside the continental United States.

c. Contractor shall adhere to other advance notice requirements as specified by the Engineer.

The Contractor's advance notification shall include, at a minimum, the following information, which will be submitted to the Engineer for approval as specified herein:

d. A diagram of the proposed testing arrangement.

e. A description of the proposed manufacturer's inspection and testing facilities and procedures.

f. A list of all instruments the manufacturer proposes to use for the tests with initial and last calibration reports certified by an approved independent testing laboratory. (All instruments shall be of ranges suitable for the quantities to be measured.)

g. Sample test data sheets.

h. Sample calculations.

i. Descriptive matter on the testing equipment which shall contain illustrative photographs, drawings, and such other matter as may be requested by the Engineer.

j. The approved Shop Drawing(s) for installation of the equipment to be tested shall be listed in the Contractor's notice and made available to the Engineer during witness shop testing.

D. Should the equipment or instrumentation not be ready, as per prior submitted approved data, the witnesses shall return to the home office at Contractor's expense. The cost of the additional trip will be borne by the Contractor.

E. Witness Shop Testing Attendee Requirements:

Contractor: A duly authorized representative of the Contractor shall be present during each witness shop test.

Engineer: When Schedule 01 43 15-1 and/or the Engineer require witness shop tests for equipment, the only tests which will be accepted are those made in the presence of the Engineer

F. Witness Shop Test Facility: Each piece of equipment for which pressure, duty, capacity, rating, efficiency, performance, function, or special requirements are specified, shall be tested in an approved facility in a manner which shall conclusively prove that its characteristics comply fully with the requirements of the Contract Documents.

G. Tests shall be conducted in accordance with the test codes of the ASME and the IEEE.

H. Witness Shop Test Results:

The results of the shop tests shall be considered official and conclusive for the purpose of determining whether or not the equipment is in accordance with the performance requirements as specified.

No such equipment shall be shipped to the work site until the Engineer notifies the Contractor in writing that the results of the Witness Shop Test(s) are acceptable.

I. Certificate of Authenticity:

Inspection and shop test data and interpreted results thereof accompanied by a certificate of authenticity sworn to, before a notary, by an officer of the manufacturing company, shall be forwarded to the Engineer for review and approval as required.

When witness shop tests are waived by the Engineer, the manufacturer's actual test data and the interpreted results thereof, accompanied by a certificate of authenticity sworn to by a responsible official of the manufacturing company, shall be submitted to the Engineer for approval.

J. Serial Numbers: All equipment and material to be Witness Shop Tested shall be identified with serial numbers and/or approved permanent type identification marks.

K. Expenses:

The duration of each witness shop test shall be as required for conducting all specified performance tests, as determined by the Engineer.

Retesting:

a. If a retest is required, the entire retest cost of the retest shall be borne by the Contractor.

1.06 Quality Assurance

A. Unless otherwise approved by the Engineer, all Witness Shop Tests for equipment shall take place at the point of manufacture and/or origin.

B. Witness shop testing of equipment shall be performed in accordance with:

The procedures described herein, and

The Witness Shop Test requirements of the Specification Section(s) referenced in Schedule 01 43 15-1, Witness Shop Test Schedule.

C. Where applicable, prior to the witness shop testing, the Contractor shall ensure that the equipment to be witness shop tested have met the requirements and approved by the Engineer as specified in Section 01 43 10 – Contractor's Work Quality.

1.07 Submittals

A. Submittals shall comply with the requirements of the Contract Documents.

B. In addition, for each item of equipment listed in Section 01 43 15-1, Witness Shop Test Schedule, located after the End of Section designation, the Contractor shall submit the following:

Action Submittals:

a. Advance notice for each item, as specified herein.

b. Test Report Documents: Submit two (2) copies of a detailed Witness Shop Test performance test report, including but not limited to the followings documents:

1) Copy of the Witness Shop Test procedure.

2) Final diagram of the testing arrangement.

3) Copies of the raw test data sheets.

4) Copies of the tabulated test data work sheets.

5) Copies of the instrumentation calibration certificates.

6) Calculations.

7) Characteristic curves, for graphical representation of the performance test data.

8) Copies of the photos taken during the test.

9) Certification of authenticity by the Manufacturer, as specified herein.

10) Non-editable electronic (e.g., PDF) copy of the complete report including all supporting documents.

11) Additional information necessary for evaluating performance of the equipment against the requirements of the Contract Documents.

C. Refer to the individual Specification Section(s) referenced in Schedule 01 43 15-1 for additional submittal requirements regarding Witness Shop Testing.

1.08 Delivery, Storage, and Handling

A. Not Used

1.09 Spare Parts, Special Tools, and Supplies

A. Not Used

1.10 Special Warranty Provisions / Guarantee Periods

A. Not Used

PRODUCTS

1.11 Manufacturers

A. Not Used

1.12 Materials / Equipment

A. Not Used

1.13 Fabrication / Assembling / Finishes

A. Not Used

1.14 Source Quality Control / Shop Tests

A. Not Used

EXECUTION

1.15 Examination / Preparation

A. Not Used

1.16 Application

A. Not Used

1.17 Field Testing / Quality Control

A. Not Used

1.18 Startup / Demonstration

A. Not Used

1.19 Adjusting / Protection / Cleanup

A. Not Used

SCHEDULE 01 43 15–1

WITNESS SHOP TEST SCHEDULE

Specification Reference:		**Equipment Scheduled for Witness Shop Testing:**
Section No.	**Section Title:**	
40 05 59.01	Interceptor Gates	See Section for Details
40 05 59.05	Isolation Gates	Isolation Gate at M-39
40 80 81	PMCS Factory Tests	PMCS Panels
43 23 13.02	Pumps – General	Flushing Pumps

END OF SECTION

NO TEXT ON THIS PAGE

01 61 50 GENERAL PRODUCT REQUIREMENTS

GENERAL

1.01 Summary

A. Equipment and appurtenances

B. Delayed approvals

C. Accessories included

D. Contractor's working equipment

E. Excessive loadings

F. Welding

G. Sole plates

H. Grouting

I. Operating instructions

J. Damage during tests and instruction periods

K. Work may be rejected at any time

L. Requirements for electrical work and electrical equipment

M. Service of manufacturer's engineer

1.02 Payment

A. There is no separate payment provision for this Section.

1.03 Related Sections

A. Not Used

1.04 References

A. Not Used

1.05 Description

A. Equipment and appurtenances. Equipment and appurtenances shall be designed in conformity with ASME, ASTM, and IEEE standards, as applicable, and shall be of rugged construction and of sufficient strength to withstand all stresses that may occur during fabrication, testing, transportation, installation and all conditions of operation. Adequate stays, braces and anchors shall be provided. All bearings and moving parts shall be adequately protected against wear by bushings or other approved means and shall be fully lubricated by readily accessible devices. Details shall be designed for appearance as well as utility. Protruding members, joints, corners, gear covers and the like shall be finished in appearance. All exposed welds shall be ground smooth and the corners of structural shapes shall be mitered.

Machinery parts shall conform exactly to the dimensions shown on the working drawings. There shall be no more fitting or adjusting in setting up a machine than is necessary in assembling high-

grade apparatus of standard design. The equivalent parts of identical machines shall be made interchangeable.

All equipment components shall comply with American standards, except where written permission is granted by the Engineer to deviate from such standards. Such standards shall include in part or in whole, but shall not be limited by, the standards, codes, specifications, or tentative specifications adapted and published by technical societies, organizations and bodies specified in the Contract. Thread components made to metric, Whitworth or other foreign standards are unacceptable.

All grease lubricating fittings on equipment shall be button head type and samples thereof shall be submitted for approval.

All machinery and equipment shall be safeguarded in conformity with the safety codes of the ANSI, OSHA and related New York State and New York City Codes.

All electric motors shall be designed to conform to IEEE standards and to Section 26 05 91 – Low Voltage Electric Motors. Characteristics of electrical energy and source of supply are given in these Sections. Electric energy supplies at the site of the work is subject to commercial loads and operating variations. The voltage given in the Contract Documents is subject to correction for plant bus conditions and feeder drop. Adequate and proper provisions must be made so that all apparatus furnished hereunder will operate normally under such conditions.

Galvanized cast iron junction boxes or equivalent provisions for threaded conduit connections shall be furnished, unless otherwise specified or approved.

Equipment comprising several electrically operated devices shall be furnished completely wired and shall have all electrical appliances, conduit and connections that are integral parts thereof. Such connections shall terminate in a junction box of ample size.

Limit switches and other mechanically actuated switches shall be enclosed in cast metal boxes and be installed in the proper locations ready for rigid conduit connections. Switches shall be complete with all supports, stops, cams, arms, tripping and operating members which shall be adjustable where required for proper functioning. A complete statement of the scheme of control sequence and timing of operations required shall be submitted for approval. The electrical parts of mechanically actuated switches shall be encased as specified and be fully protected from shock and strain under all operating conditions. The manufacturer shall guarantee, for the service required, the electrical units and parts used in the assembly.

Electrical equipment shall be supplied only by manufacturers who maintain service facilities and spare parts stocks so that service and spare parts are capable of being furnished to a Engineer specified location within a maximum time period of 48 hours. Service and stock shall be adequate for the equipment supplied, and evidence of such capability shall be presented when the equipment is submitted for approval.

Equipment manufactured outside continental U.S.A. shall be supplied only by manufacturers who maintain acceptable service facilities and spare parts stocks within the continental U.S.A. Service and stock shall be adequate for the equipment supplied and evidence of such facilities shall be presented when the name of the manufacturer is submitted for approval.

The Interceptor Gate Chambers shall be Class I, Division 1 Group D classified spaces. All equipment and materials designed, furnished and installed within or contiguous with the Interceptor Gate Chambers shall comply with this classification.

B. Delayed approvals. The time spent in approving working drawings, samples, equipment or other data which does not conform in every respect with the Contract Documents will not be considered as the basis for a claim for an extension of the Contract time.

C. Accessories included. The Contractor shall furnish, install and protect all necessary guides, track rails, bearing plates, anchor and attachment bolts and all other appurtenances needed for the installation of the devices included in the equipment specified. Anchor bolts shall be made of ample size and strength for the purpose intended.

Suitable templates and working drawings for installation shall be furnished.

The Contractor shall furnish with each piece of equipment one complete set of suitably marked special tools and appliances which may be needed to adjust, operate, maintain or repair the equipment. It shall submit, for approval by the Engineer, a complete list of the special tools and appliances to be furnished. Such tools and appliances shall be furnished in approved painted steel cases properly labeled and equipped with commercial grade cylinder locks and duplicate keys.

All spare parts shall be furnished as specified in the Contract. The Contractor shall furnish and install all specific equipment complete with all appurtenances, enclosures, means for connecting to power supply, and supporting structures necessary for standard operation of the equipment.

D. Contractor's working equipment. The Contractor shall have on hand sufficient proper equipment and machinery of ample capacity to facilitate the work and to handle all emergencies normally encountered in work of this character.

E. Excessive loadings. Floor slabs shall not be subjected to excessive concentrated loads and in no case shall maximum safe loads be exceeded.

F. Welding. All structural welding and gas cutting shall conform to Specification Section 05 05 23.01.

G. Sole plates. All equipment mounted to concrete without cast iron or fabricated steel equipment bases shall be provided with a sole plate approved by the Engineer.

H. Grouting. The Contractor shall, at its own expense, furnish all materials and labor for, and shall properly bed in epoxy grout each piece of equipment or its supporting base resting on masonry foundations.

The epoxy grout shall be pre-measured, fast curing, high strength, non-shrink, have good adhesion to concrete and steel, and resist degradation by oil, solvents and acids. All epoxy grouting material and installation procedures shall be approved by the manufacturer of the equipment being grouted and the Engineer.

The storage, surface preparation, forming, mixing, and placing of the grout shall be as recommended by the grout manufacturer.

Flowability of the material shall provide self-leveling for ease of placement.

Epoxy grout shall completely fill the space between the equipment or base and the foundation and it shall generally average one inch in thickness. Leveling wedges shall not be removed and jacking bolts shall not be backed off before final set of grout. Voids left by wedges shall be pointed. Exposed surfaces of epoxy grout shall be finished to the satisfaction of the Engineer. Final alignment of the equipment shall be checked in the presence of the Engineer.

I. Operating instructions. The Contractor, through qualified individuals, shall adequately instruct designated employees of the City in the operation, maintenance and care of all equipment installed hereunder.

J. Damage during tests and instruction periods. The Contractor shall be fully responsible for the proper operation of equipment during test and instruction periods and it shall neither have nor make any claim for damage which may occur to equipment prior to the time when the City formally takes over the operation thereof.

K. Work may be rejected at any time. If at any time an inspection, test or analysis of work reveals faulty design, inferior or defective materials, poor workmanship, improper installation, excessive wear or non-conformity with the requirements of the Contract Documents, such work will be rejected and shall be replaced with satisfactory work at the Contractor's expense.

Electrical appliances which have been subjected to damage by water shall be thoroughly dried out and put through a special dielectric test as directed by the Engineer, or shall be replaced by the Contractor, all at its own expense.

L. Service of manufacturer's engineer. The prices bid for equipment shall include the cost of furnishing a competent and experienced engineer or superintendent, from the company manufacturing the equipment, who shall assist the Contractor, when required, to install, adjust and test the equipment in conformity with the Contract Documents. After the equipment is placed in permanent operation by the City, such engineer or superintendent shall make all adjustments and tests required by the City to prove that such equipment is in proper and satisfactory operating condition.

1.06 Quality Assurance

A. Not Used

1.07 Submittals

A. Not Used

1.08 Delivery, Storage, and Handling

A. Not Used

1.09 Spare Parts, Special Tools, and Supplies

A. Not Used

1.10 Special Warranty Provisions / Guarantee Periods

A. Not Used

PRODUCTS

1.11 Manufacturers

A. Not Used

1.12 Materials / Equipment

A. Not Used

1.13 Fabrication / Assembling / Finishes

A. Not Used

1.14 Source Quality Control / Shop Tests

A. Not Used

EXECUTION

1.15 Examination / Preparation

A. Not Used

1.16 ImplementationChoose an item.

A. Not Used

1.17 Field Testing / Quality Control

A. Not Used

1.18 Startup / Demonstration

A. Not Used

1.19 Adjusting / Protection / Cleanup

A. Not Used

END OF SECTION

NO TEXT ON THIS PAGE

01 65 00 PRODUCT DELIVERY, STORAGE AND HANDLING

GENERAL

1.01 Summary

A. Section Includes:

Delivery of products

Handling of products

Storage of products

Protection of material and equipment

Inspection of items

Supporting heavy loads

1.02 Payment

A. There is no separate payment provision for this section.

1.03 Related Sections

A. Not Used

1.04 References

A. Not Used

1.05 Description

A. General Requirements

The Contractor shall make all arrangements for transportation, delivery and handling of materials and equipment required for installation and completion of the Work.

Storage space at the site is limited; the Contract Documents shall indicate the contract specifics for staging and available storage areas. Coordination is to be done with the Engineer as to whether on-site storage will be permitted. Any off-site storage locations or facilities are to be inspected and approved by the Engineer prior to storing items.

a. When storage of materials and equipment is off-site, deliveries to the site shall be scheduled to coincide with installation of the items.

b. If necessary to move stored materials and equipment during construction, the Contractor shall move or cause to be moved materials and equipment without any additional compensation.

Unless otherwise specified, the City's docking facilities or hoisting equipment at or near the project site will not be available for the Contractor's use.

Transport and handle products in accordance with manufacturers' instructions and in compliance with all Federal, State and Local Laws.

1.06 Quality Assurance

A. Not Used

1.07 Submittals

A. Not Used

1.08 Delivery, Storage, and Handling

A. Delivery of Products

The Contractor shall arrange deliveries of products in accordance with construction schedules and with ample time to facilitate inspection prior to installation.

The Contractor shall coordinate deliveries to avoid conflict with Work and conditions at the site and to accommodate the following:

a. Limitations of storage space

b. Availability of equipment and personnel for handling products

c. Materials and equipment shall not be delivered to Site until related Shop Drawings, including the manufacturer's recommended storage instructions, have been approved by the Engineer.

d. Materials and equipment shall not be delivered to Site until required storage facilities have been provided.

e. Products shall be delivered to the Site in the manufacturer's original, unopened, labeled containers. The Engineer shall be informed of all deliveries of all materials and equipment.

f. Partial deliveries of component parts of equipment shall be clearly marked to identify the equipment, to permit easy accumulation of parts and to facilitate assembly.

g. Immediately on delivery, the Contractor shall inspect shipments to ensure:

1) Product complies with requirements of Contract Documents and approved Submittals.

2) Quantities are correct.

3) Containers and packages are intact and labels are legible.

4) Products are properly protected and undamaged.

B. Handling of Products

The Contractor shall provide equipment and personnel necessary to handle products in a manner that prevents soiling or damage to products or packaging.

The Contractor shall provide additional protection during handling as necessary to prevent scraping, marring or otherwise damaging products or surrounding surfaces.

The Contractor shall handle products in a manner that prevents bending or overstressing.

Heavy components shall be lifted only at designated lifting points.

Materials and equipment shall be handled at all times in a safe manner and as recommended by manufacturer or supplier so that no damage will occur to them. Do not drop, roll or skid products off delivery vehicles. Hand carry or use suitable materials handling equipment.

C. Storage of Products

Handle and lift products only at designated lift points and by methods to avoid soiling, disfigurement, bending, overstressing and damage.

Store products on shelves, in bins, or in neat groups of like items, with seals and labels intact and legible, and in a manner to provide access for maintenance and inspection.

Store loose granular materials on clean, solid, flat surfaces and prevent mixing with foreign matter. Store fabricated products supported above the ground on skids or blocking. Provide erosion control and surface drainage to prevent erosion and ponding of water as per the contract documents or directed by the Engineer.

Cover products subject to discoloration or deterioration with impervious sheet covering and protect products from soiling and staining.

Store and protect products that are subject to damage by the elements in weather-tight or climate-controlled enclosures, and according to manufacturer's instructions. Maintain temperature, ventilation, and humidity within ranges stated in manufacturer's instructions.

Attach applicable manufacturer's storage service instructions labeled "STORAGE SERVICE INSTRUCTIONS ENCLOSED" to exterior of each stored product.

Inspect, maintain and service stored products on a regularly scheduled basis, consistent with manufacturer's instructions.

Record inspection, maintenance and services performed and keep log available for review by the Engineer.

D. Protection of Materials and Equipment

The Contractor shall make every effort to minimize extended storage periods of materials and equipment at the Site by judiciously scheduling deliveries to coincide with construction needs.

Unless otherwise specified, storage of any mechanical or electrical equipment or other ultraviolet or weather sensitive items out of doors at any time is prohibited regardless of the protection furnished. Storage of mechanical and electrical equipment within structures at the Site will not be permitted unless the structures are enclosed. A structure shall be considered to be enclosed when it is roofed and has protection of doorways, windows and other opening closures.

All mechanical and electrical equipment shall be coated, wrapped and otherwise protected from snow, rain, drippings of any sort, dust, mud, condensed water vapor, etc., during shipment, storage, and installation and until placed in service.

All storage areas for motors shall be heated. Space heaters shall be supplied, as required, in all enclosures being utilized for storage of motors. Motors equipped with space heaters shall be properly wired and the heaters activated while the motors are in storage.

Should storage of mechanical and electrical equipment become necessary before it can be stored at the Site, the Contractor shall provide storage in a weatherproof warehouse.

Materials may be stored out of doors if supported above ground surface on wood runners and protected with approved, effective and durable covers.

All storage and protection of materials and equipment at the Site shall be subject to the approval of the Engineer.

Prior to installation of the equipment, the Contractor shall have the manufacturer inspect the equipment and certify that its condition has not been detrimentally affected by a long storage period. Such certifications by the manufacturer shall be deemed to mean that the equipment is judged by the manufacturer to be in a condition equal to that of equipment that has been shipped, installed, tested and accepted in a minimum time period. As such, the manufacturer will guarantee the equipment equally in both instances. If such a certification is not given, the equipment shall be judged to be defective, and shall be removed and replaced at the Contractor's expense.

When stored materials and equipment are moved from the storage location to the Site, the Contractor shall move or cause to be moved the items without additional compensation.

E. Inspection of Items

The Contractor shall inspect all items including all boxes, crates and packages containing materials and equipment for damage that may have occurred during shipment prior to their removal from the truck or other manner of conveyance. Any damage shall be reported immediately to the Engineer.

The Contractor shall then carefully remove the materials and equipment from the truck or trucks on which they were shipped. The materials and equipment shall then be transported to the place of installation at the job Site. The Contractor shall be liable for loss or damage to the materials and equipment that may occur while being unloaded, transported, stored or installed.

All materials and equipment that arrives at the job site during normal working hours shall be unloaded as soon as practicable.

F. Supporting Heavy Loads

In all cases where heavy loads or demolition may temporarily affect existing slabs, the Contractor shall confirm the slab's load sustaining ability. Whenever heavy loads are to be stored or temporarily imposed on slabs, or whenever the structures may be impacted by demolition, the Contractor shall submit for approval by the Engineer a plan of procedure prepared by a licensed professional engineer, indicating a structural analysis of the slabs and methods of distributing loads, and providing auxiliary support so that slabs and beams are not loaded in excess of their design loadings.

1.09 Spare Parts, Special Tools, and Supplies

A. Not Used

1.10 Special Warranty Provisions / Guarantee Periods

A. Not Used

PRODUCTS

1.11 Manufacturers

A. Not Used

1.12 Materials / Equipment

A. Not Used

1.13 Fabrication / Assembling / Finishes

A. Not Used

1.14 Source Quality Control / Shop Tests

A. Not Used

EXECUTION

1.15 Examination / Preparation

A. Not Used

1.16 Implementation

A. Not Used

1.17 Field Testing / Quality Control

A. Not Used

1.18 Startup / Demonstration

A. Not Used

1.19 Adjusting / Protection / Cleanup

A. Not Used

END OF SECTION

NO MORE TEXT ON THIS PAGE

01 73 12 MAINTENANCE OF OPS & CONSTRUCTION STAGING

GENERAL

1.01 Summary

A. Maintenance of site operations

B. General criteria and restrictions

C. Construction staging

1.02 Payment

A. There is no separate payment provision for this Section.

1.03 Related Sections

A. Division 1 General Provisions of the NYC DEP BWSO Standard Sewer and Water Main Specifications

1.04 References

A. Not Used

1.05 Description

A. Maintenance of Site Operations

The Contractor shall perform its work in a manner such that the Engineer can keep the existing site/facility in continuous dependable operation. Any temporary work that may be required to maintain the site/facility in operation shall be furnished by the Contractor at the direction of the Engineer at no extra cost to the City.

The Contractor shall keep the Engineer and designated representative of the facility/site informed of any Work that may interfere with normal operations. The Engineer and the facility/site representative must receive a written request at least 15 days in advance of proposed work.

a. The CPM schedule maintained by the Contractor shall not serve as prior notice. No work shall proceed prior to the written approval of Engineer.

Unless otherwise permitted by the facility/site representative, no existing valves or equipment shall be operated by the Contractor.

The employees of the Contractor or its Subcontractors may be prohibited from entering or using some areas of the site/facility.

B. General Criteria and Restrictions

The following general criteria and restrictions shall apply to the Work except where otherwise noted in the Contract:

a. When the connection of a new pipeline to an existing structure or pipeline requires a shutdown of the existing structure or pipeline, the new pipeline except for the final connection shall be tested prior to proceeding with the shutdown. When the final connection is completed,

including complete survey and inspection of pipe in accordance with NYC DEP BWSO Standard Sewer and Watermain Specifications, the new pipeline shall be tested again in its entirety.

b. The Contractor shall provide all pumps, piping, valves, etc., as necessary to dewater all conduits, channels, and pipes directly to a location approved by the Engineer.

c. The Contractor shall provide all pumps, piping, valves, etc., as necessary, to remove unused chemicals from all pipes as described herein.

d. The Contractor shall flush and clean all process channels, conduits, manholes, and tanks after they have been removed from service.

e. Any modification to, relocation of, connection to or shutdown of an existing tank, vessel, conduit, channel, pipe, etc. shall not be scheduled or occur prior to the Engineer's written approval. The Contractor is advised that the conduits, channels and tanks may contain accumulations of putrescible materials which will remain on the walls and inverts. These materials emit noxious, odorous and hazardous gases such as hydrogen sulfide and methane. The Contractor is advised to ventilate and test the air of all confined spaces prior to entry.

f. The Contractor is advised that existing valves, gates and other devices shall be considered as inoperable and subject to leaking. The Contractor shall be responsible for designing, furnishing, installing and removing all temporary devices, stop logs, plugs or bulkheads necessary to isolate or dewater pipes, channels, conduits, or tanks to perform the work.

g. The Contractors shall install and maintain temporary drainage and containment, to the satisfaction of the Engineer, where the existing drainage and containment has been removed due to construction progress until the permanent replacement drainage and containment system has been installed.

h. The Contractor shall coordinate its activities with the other contractors on the site so as to comply with the provisions of these specifications and their intent.

The following general restrictions shall be applied to all equipment and appurtenant utility systems:

i. The restrictions provided herein serve to maintain the existing site facilities in continuous operation and to coordinate with other construction activities at the site in accordance with the requirements of the authorities having jurisdiction.

j. Existing fire suppression piping at / near Work Sites shall be operational at all times until replaced.

k. Plumbing Facilities: All building plumbing systems such as sanitary facilities, roof and floor drains, pumping, etc., shall be maintained until turned over by site operations for demolition.

l. Storm Drainage: Storm drainage on the site shall be operational at all times. If necessary, the Contractor shall pump between manholes during the installation of new piping or underground utilities. Roof drainage shall be maintained at all times and no roof shall be permitted to accumulate standing water.

m. All site drainage flows shall not be interrupted.

n. Power, Light and Communication Systems: Electric power, lighting service, security camera systems and communications systems shall be maintained in uninterrupted operation in all areas that remain in operation. Individual units may be disconnected as required for replacement or relocation.

o. Sump Pumps and Sumps: All existing sumps shall be maintained in an operable condition with either existing pumps or temporary pumps. Interim piping, power and controls shall be provided as required.

p. Drainage Pipes and Conduits:

1) Unless otherwise specified, the contents of all pipes, conduits, pits or other liquid containing structures shall be transferred to a location approved by the Engineer using hoses, piping or pumps if hydraulic conditions so require them. The Contractor, whose work requires the draining, shall provide the pumps, piping and hoses.

2) If a drain is not available on the pipe to be drained, then a wet tap shall be made using a tapping saddle and valve. No uncontrolled spillage of a pipe's contents shall be allowed, nor shall a pipe's contents be discharged to a sump.

3) Any spillage shall be immediately washed down and the floor drains, sumps and sump pump discharge piping flushed out to prevent clogging and odors.

q. Temporary Partitions and Enclosures: The contractors shall provide temporary partitions and enclosures as required by the contract documents where necessary to maintain dust-free, heated and ventilated spaces in areas which are adjacent to the work and which must be kept operational by site operations personnel.

The following requirements shall be adhered to in development of the circulation plan to be submitted in accordance with the provisions of this Section.

r. Comply with, at a minimum, all requirements of the following:

1) Division 1 General Provisions of the NYC DEP BWSO Standard Sewer and Water Main Specifications

s. Construction-related vehicles and activities shall not impede or otherwise adversely affect the flow of regular traffic traveling on the roads leading to and adjacent to the Work location.

1) Construction-related vehicles and activities shall be understood as including vehicles operated and activities undertaken by the Contractor (including the Contractor's employees, subcontractors, and visitors). Regular traffic shall be understood as referring to all vehicles other than construction-related vehicles.

2) Personal vehicles are prohibited on site.

t. Perform the Work required in this Contract in accordance with applicable traffic and safety rules, regulations, ordinances, and permit conditions.

Any temporary work that may be needed to maintain the site facilities in operation, and that is made necessary by the requirements of the Contract or by the Contractor's activities, shall be provided by the Contractor as specified under the Contract Documents or at the direction of and at no extra cost to the City.

The Contractor shall not remove any items from service without written permission from the Engineer. Upon receiving written approval from the Engineer, the Contractor shall proceed with the Work and shall proceed continuously until the Work is completed, tested, and made ready for operation.

C. Construction Staging

The Work included under this Contract, shall be performed in accordance with the Contract Documents. Further, the Contractor shall submit a comprehensive work schedule to the Engineer to demonstrate that it shall rigidly adhere to these requirements.

1.06 Quality Assurance

A. Not Used

1.07 Submittals

A. Not Used

1.08 Delivery, Storage, and Handling

A. Not Used

1.09 Spare Parts, Special Tools, and Supplies

A. Not Used

1.10 Special Warranty Provisions / Guarantee Periods

A. Not Used

PRODUCTS

1.11 Manufacturers

A. Not Used

1.12 Materials / Equipment

A. Not Used

1.13 Fabrication / Assembling / Finishes

A. Not Used

1.14 Source Quality Control / Shop Tests

A. Not Used

EXECUTION

1.15 Examination / Preparation

A. Not Used

1.16 Implementation

A. Not Used

1.17 Field Testing / Quality Control

A. Not Used

1.18 Startup / Demonstration

A. Not Used

1.19 Adjusting / Protection / Cleanup

A. Not Used

END OF SECTION

01 73 17 INSTALLATION OF EQUIPMENT

GENERAL

1.01 Summary

A. Contractor shall provide all labor, materials, equipment, incidentals, and appurtenances as shown, specified and required, to install equipment.

1.02 Payment

A. There is no separate payment provision for this Section.

1.03 Related Sections

A. Not Used

1.04 References

A. Not Used

1.05 Description

A. General:

This Section includes the following:

a. Concrete foundations, bases, dowels and anchor bolts.

b. Sleeves, recesses, openings, chases and related concrete installation items.

c. Supervision by manufacturers' representatives.

d. Workmanship.

e. Clearance and safeguards.

f. Alignment and leveling.

g. Cutting and patching.

h. Lubrication.

i. Maintenance of installed equipment.

j. Protection of installed equipment.

The Contractor shall have adequate resources on site, including labor, materials, construction tools and equipment, to successfully perform the Work.

The Contractor shall be responsible for locating, aligning and leveling all equipment and shall employ a surveyor licensed in the State of New York to set all lines and levels of equipment to the accuracies specified in the Contract Documents.

Manufacturer's complete and official installation instructions, including permissible tolerances, shall be furnished in duplicate with each unit of equipment or set of identical units.

All equipment shall be installed in accordance with the approved shop drawings (including manufacturer's specifications, drawings, and tolerances) and under the direct supervision of the

required manufacturer's representative. In no instance shall the directions of the manufacturer's representative contravene the Engineer's direction.

Equipment shall be erected in a neat and workmanlike manner on the foundations at the locations and elevations shown on the approved shop drawings unless directed otherwise by the Engineer during installation.

As a condition precedent to the acceptance of equipment installed and operating, the Contractor shall provide the Engineer with written certification, obtained from each company manufacturing equipment for the Work that the equipment is installed and does operate in accordance with the Contract Documents and manufacturer's recommendations.

B. Concrete Foundations, Bases, Dowels and Anchor Bolts:

The Contractor shall provide all reinforced concrete foundations, bases, dowels, and anchor bolts for all equipment and piping furnished under this Contract.

a. All reinforced concrete bases and supports shall be steel reinforced and dowelled to floor slabs. Where possible, dowels shall be in place before new floor slab concrete is placed.

Where not explicitly stated in the Contract Documents, the Contractor shall utilize foundation bolt drawings or templates for the installation of equipment requiring concrete bases.

Dowelling into existing work shall be provided under this Contract.

b. Anchor bolts penetrating into existing reinforced concrete work shall be in accordance with Specification Section 05 05 23.02 – Miscellaneous Metal Fastenings.

c. All concrete bases for equipment shall be treated with an approved sealer to prevent oil and grease from seeping into the concrete.

Installation of reinforced concrete bases and the installation of dowels and anchor bolts into existing and new reinforced concrete work shall be in accordance with the Contract Documents and the manufacturer's recommendations, and shall be subject to the approval of the Engineer.

C. Sleeves, Recesses, Openings, Chases and Related Concrete Installation Items:

The Contractor shall make provisions as shown on the Contract Drawings, specified, and/or otherwise required for sleeves, recesses, openings, chases, and related items, for installation of the equipment and materials

When the Contract requires the placing of conduits, saddles, boxes, cabinets, sleeves, inserts, foundation bolts, anchors and other similar work in floors or walls of buildings and structures, they shall be promptly installed in conformity with the Contract Documents. The Contractor shall arrange the work in strict conformity with the approved construction schedule and avoid interferences with the work of other contractors.

1.06 Quality Assurance

A. Not Used

1.07 Submittals

A. Not Used

1.08 Delivery, Storage, and Handling

A. Not Used

1.09 Spare Parts, Special Tools, and Supplies

A. Not Used

1.10 Special Warranty Provisions / Guarantee Periods

A. Not Used

PRODUCTS

1.11 Manufacturers

A. Not Used

1.12 Materials / Equipment

A. Not Used

1.13 Fabrication / Assembling / Finishes

A. Not Used

1.14 Source Quality Control / Shop Tests

A. Not Used

EXECUTION

1.15 Examination / Preparation

A. Concrete foundations for equipment shall be of approved design and shall be adequate in size, suitable for the equipment erected thereon, properly reinforced, and tied into floor slabs by means of reinforcing bars or dowels. Foundation bolts of ample size and strength shall be provided and properly positioned by means of suitable templates and secured during placement of concrete. Foundations shall be built and bolts installed in accordance with the manufacturers approved drawings.

B. Before mounting equipment on a foundation, the Contractor shall clean the top surface; if necessary, rough it with a star chisel and clean again; and clean out all foundation bolt sleeves.

The Contractor shall provide a sufficient number of shims about 2-in. wide and 4-in. long, and of a varying thickness from ⅛-in. to ½-in.. A combination of these shims shall be placed next to each foundation bolt to bring the bottom of the bedplate or frame about 1/8 inch above the final setting. The equipment shall be lowered by changing the combination of shims. The Contractor shall use brass shim stock of various thicknesses, and continue to level the equipment a little at a time and in rotation until it is at the correct elevation in both directions.

When the equipment is level, the Contractor shall tighten down on the foundation bolts a little at a time, in rotation, to make certain the equipment remains level and does not shift on the shims. A preliminary alignment check shall be made before grout is placed.

C. Equipment shall be set, aligned and assembled in conformance with manufacturer's instructions. Runout tolerances by dial indicator method of alignment shall be plus or minus 0.002-in. or as directed by the manufacturer, whichever is more stringent.

D. All blocking, wedges, shims, filling pieces, or other materials required for the proper support and leveling of equipment during installation shall be furnished by the Contractor. All temporary supports shall be removed, except the shims, which may be left in place with the approval of the Engineer. Any grinding necessary to bring parts to proper bearing after erection shall be done at the expense of the Contractor.

E. Each piece of equipment or supporting base, bearing on concrete foundations, shall be bedded in grout. The Contractor shall provide a minimum of 1½-in. thick grouting under the entire base plate supporting each pump, motor drive unit, and other equipment. Grouting shall be as specified in the respective equipment specification section(s) and as approved by the Engineer.

F. When motors are shipped separately from driven equipment, the motors shall be received, stored, have insulation resistance tested once a month, and the reports submitted to the Engineer. Space heaters shall be supplied in all enclosures being utilized for storage of motors. After driven equipment is set, the motors shall be set, mounted, shimmed, mill righted, coupled and connected complete.

G. Moving parts shall be rotated a minimum of once weekly before and after installation to ensure proper lubrication and to avoid metal-to-metal welding and to prevent "flat-spotting" of bearings.

H. Anchor and expansion bolts shall be furnished by the Contractor as specified and required by this Contract Documents.

I. At threaded connections, a molybdenum disulfide anti-seize compound shall be applied to all threads in mechanical connections such as bolts, studs, cap screws, tubing, etc., unless otherwise indicated.

1.16 Implementation

A. Workmanship:

The following erection details are not intended to be all-inclusive, but only to cover some of the important practices. In all cases, only the best methods known to the trades are to be employed.

Only those workers qualified in the handling, setting, alignment, leveling and adjustment of the type of equipment supplied shall be employed in the Work.

An oil bath heater shall always be used to expand couplings, gears, etc. They shall not be forced or driven on equipment shafts, nor shall they be subjected to an open flame or torch.

Wedging shall not be permitted. Only the least number of flat shims are to be used in leveling equipment (shims are to be clean and free of slag). All shims, filling pieces, keys packing, red or white lead grout, or other materials necessary to properly align, level and secure apparatus in place shall be furnished by the Contractor. All parts intended to be plumb or level must be proven

exactly so. Any grinding necessary to bring parts to proper bearing after erection shall be done at the expense of the Contractor.

Proper tools shall be used in the assembly of equipment and materials to prevent marring the surface of shafts, nuts, or other parts.

Connections requiring gaskets shall be tightened evenly all around to ensure uniform stress over the entire gasket area.

No equipment and materials shall be altered or repaired, and no burning or welding will be permitted on any parts having machined surfaces, except by written permission of the Engineer.

No rigging shall be done from any structure without the permission of the Engineer, and the Contractor shall be completely responsible for any damage to the structure due to its operations.

Only such equipment and materials that shall not damage the structure or equipment and materials shall be used on the Work.

The Contractor shall be responsible for the exact alignment of equipment with associated piping and, under no circumstances, will "pipe springing" be allowed.

Misaligned holes shall be reamed, as excessive driving of bolts or keys will not be permitted.

The Contractor shall furnish and install all necessary plugs in lubrication holes to prevent entry of foreign material.

B. Clearances and safeguards:

All devices, equipment, and systems furnished under this Contract shall be fabricated and installed so that the necessary and required clearances are provided for operation, maintenance, repair, and replacement. It is the Contractor's responsibility to review the Contract Drawings and ensure that the necessary and required clearances are available, and it is the Contractor's responsibility to notify the Engineer in the event that such clearances cannot be provided based on the Contract Documents.

The construction arrangement, assembly locations, and guarding of all equipment shall conform to the latest ANSI safety practices, the New York State Industrial Code, and all standards specified in the Contract Documents.

C. Alignment and leveling:

All couplings shall be aligned while the equipment is free from all external loads.

Both angular and parallel alignment shall be checked, and the degree of misalignment shall be recorded and submitted to the Engineer.

Dial indicators shall be used for the checking of angular and parallel alignment. During rotation of the held couplings in performance of this test, they shall be maintained in the same relative position, and the dial indicator readings shall be taken at the same place on the circumference of the coupling.

Misalignment shall not exceed the manufacturer's tolerances.

D. Cutting and patching:

Whenever it becomes necessary to cut existing work, the location and size of cut and method of cutting shall be as approved by the Engineer and adjacent work shall not be damaged. On completion of the cutting, all affected areas shall be restored satisfactorily by qualified workers.

E. Lubrication:

All lubrication shall be performed by the Contractor in accordance with the lubricant specifications and directions furnished by the manufacturer.

a. If required by the manufacturer's specifications and/or instructions, the Contractor shall provide lubrication of equipment while in storage, from delivery to installation.

The Contractor shall furnish required lubricants for the equipment until it is accepted.

Lubricants shall be changed upon completion of installation and as frequently as required thereafter during the period between installation and acceptance. New lubricants shall be put into the equipment at the time of acceptance.

1.17 Field Testing / Quality Control

A. Supervision by Manufacturer's Representative: The Contractor shall provide the services of qualified technical representatives of the equipment manufacturers who shall adequately supervise, in person and on site, the installation and testing of all equipment furnished under this Contract and instruct the Contractor's personnel and Engineer operating personnel on maintenance and operation of its equipment.

The manufacturers' representatives shall devote, at a minimum, the entire amount of time specified under the relevant Specification sections for the equipment. Any additional time required to achieve successful installation and operation shall be at the expense of the Contractor.

The manufacturers' representatives shall sign in and out in a log for this purpose kept by the Engineer on every occasion they are on the Site and shall indicate time of arrival, departure, and the purpose of their visit.

1.18 Startup / Demonstration

A. Not Used

1.19 Adjusting / Protection / Cleanup

A. During the period between installation and substantial completion, the Contractor shall maintain all equipment in accordance with the equipment manufacturer's instructions as approved by the Engineer.

The Contractor shall also provide protection of installed equipment, as required, to prevent damage and remove protection devices/facilities, when no longer needed, prior to completion of work:

a. Projections such as wall corners, jambs, sills and soffits of openings, shall be covered in areas used for traffic and for passage of products in subsequent work.

b. Equipment for which shop finish paint is required shall be protected in the shop and during transportation and installation to prevent injury and

abrasion. Such equipment shall be scheduled for installation when a building is considered enclosed and as late as possible in the construction schedule. However, maintenance of schedules may require the installation of such equipment in unheated areas and in areas where masonry work, concrete finishing, steel erection, painting, and other work will be in progress.

1) Shop finished Work shall be protected during and after installation by waterproof wrappings sealed to prevent condensation on surfaces. Wrappings shall be sufficient to protect surfaces from damage by drippings from masonry and painting work, and additional covering or sheathing shall be provided to protect equipment from contact damage that might result from work in progress in adjacent areas.

2) Prior to Substantial Completion, wrappings and coverings shall be removed, equipment shall be cleaned and all scratches and abrasions shall be refinished.

END OF SECTION

01 75 10 PRELIMINARY AND FINAL FIELD TESTS

GENERAL

1.01 Summary

A. Section Includes:

Field Test Schedule and Updates

System Test Procedures

Contractor Responsibilities

Preliminary Field Tests of Equipment

Preliminary Field Tests of Systems

Final Field Tests of Equipment

Final Field Tests of Systems

1.02 Payment

A. There is no separate payment provision for this Section.

1.03 Related Sections

A. Section 01 43 10 - Contractor's Work Quality

1.04 References

A. "System": A System, for purposes of testing, is defined as consisting of the component equipment, valves, piping, instrumentation, controls, ducts, accessories, etc., which are required for the proper functioning of each piece of equipment and the System as a whole. The purpose of the System testing is to demonstrate the capability of the equipment, interconnections and accessories to perform as specified.

1.05 Description

A. All field tests, including equipment and Systems tests, shall be performed in accordance with the requirements of this Section. The requirements contained herein shall apply, whether or not this Section is specifically referenced elsewhere in the Contract Documents.

B. Field tests shall include preliminary and final field tests of equipment and Systems.

Preliminary field tests of equipment and Systems shall be made with compatible fluid or water. The Contractor shall submit testing procedures and proposed testing fluid proposed for engineer’s approval and shall include a safety Job Hazard Analysis (JHA).

Final field tests of equipment and Systems shall utilize the wastewater, wastewater components, and fluids for which the equipment and Systems are designed.

All tests shall be performed in strict compliance with applicable manufacturer's and Engineer's instructions.

No testing of Systems shall commence before the associated pipelines have been satisfactorily tested for leakage in accordance with the requirements of the Contract.

Field tests for equipment supplied by the interceptor gate manufacturer is specified in Specification Section 40 05 59.01 – Interceptor Gates.

C. For a successful test of equipment or System, the equipment or System shall operate trouble free for the continuous period of time, as specified below. If there are any interruptions in operation during the test, the test shall be repeated until the equipment or System operates trouble free for the specified time period.

D. System Test Procedures:

The following are to be considered a part of all System test procedures:

a. Variable capacity equipment shall be operated over the full capacity range of the maximum, minimum and at least three (3) intermediate points for a minimum of 30 minutes at each point.

b. Multiple equipment groupings are to be operated both singly and together up to the maximum capacity of the System.

c. Header and cross connected groups of units are to be operated using all connecting combinations.

d. All equipment items, including standby units are to be tested. It may be necessary to repeat System tests at maximum condition to insure that standby units are included in System tests.

e. Each operating unit shall be run for at least one hour alone (equipment field test) and for four hours as a System at maximum capacity after reaching stable operating conditions.

f. All equipment, interconnecting piping and accessories are to be checked for leakage and specified rate performance capability. Instrumentation and controls shall be tested as part of the equipment.

E. Contractor Responsibilities:

For preliminary field tests of equipment and Systems, the Contractor shall furnish all labor, lubricants, fuel, power, water, materials, plant and instrument air, instruments and equipment required for the tests.

For final field tests of equipment and Systems, the Contractor shall furnish all labor, lubricants, materials, fuel, power, instruments and equipment required for the tests. The City will furnish all water necessary.

All testing shall be performed by the Contractor and witnessed by the Engineer, DEP Operations personnel and, when applicable, representatives of the Electrical Division, Department of Buildings. Preliminary field testing of equipment and systems and final field testing of equipment and systems shall be performed within the time periods designated in the preliminary construction schedule (CPM) during hours that are approved by the Engineer.

1.06 Quality Assurance

A. Nothing stated herein shall affect the requirements contained in Section 01 43 10 – Contractor's Work Quality; or the specific pressure testing requirements for piping systems specified in the Contract Documents. Such tests shall be performed at the scheduled time, prior to backfilling, encasement or enclosure, if applicable. However, checking the systems for leakage at the pressures developed, particularly for leakage of the visible type, shall be performed as part of the tests included herein.

1.07 Submittals

A. The Contractor shall submit a preliminary and final field test schedule to the Engineer within 120 days after the date for commencing work in the Notice to Proceed. The test schedule shall be updated every 2 months or sooner if necessary, until completion of the required testing. The field test schedule shall itemize all key tasks in chronological order, based on the Construction CPM Schedule established by the Engineer, to meet all the requirements of this Section. All preliminary and final field testing to be conducted shall be organized and scheduled in accordance with the approved test procedure.

B. The field test schedule shall include proposed test dates, preliminary or final field test, equipment or System being tested, specification references, equipment identification numbers, and indication of whether the test procedure has been submitted for approval and approval status.

C. The Contractor shall notify the Engineer in writing 30 days prior to any testing. The Contractor shall not proceed with any testing until the test procedure has been approved by the Engineer.

D. Before each test commences, the Contractor shall submit a detailed test procedure and manpower schedule to the Engineer for approval.

1.08 Delivery, Storage, and Handling

A. Not Used

1.09 Spare Parts, Special Tools, and Supplies

A. Not Used

1.10 Special Warranty Provisions / Guarantee Periods

A. Not Used

PRODUCTS

1.11 Manufacturers

A. Not Used

1.12 Materials / Equipment

A. Not Used

1.13 Fabrication / Assembling / Finishes

A. Not Used

1.14 Source Quality Control / Shop Tests

A. Not Used

EXECUTION

1.15 Examination / Preparation

A. Not Used

1.16 Implementation

A. Preliminary Field Tests of Equipment:

Each item of equipment shall be field tested with fluid as suitable for the system, and shall operate trouble free in accordance with the procedures prescribed in the Contract Documents, preliminary tests shall demonstrate that equipment and appliances were properly installed, meet their specified operating cycles and characteristics, and are free from defects such as overheating, overloading and undue vibration.

A successful test shall consist of at least one continuous hour of trouble free operation unless a longer period is specified in the Contract Documents.

Field test requirements of equipment supplied by the interceptor gate manufacturer are specified in Specification Section 40 05 59.01 and 40 05 59.02.

B. Preliminary Field Tests of Systems:

All Systems shall be field tested with fluid as suitable for the system and shall operate trouble free for four continuous hours, or longer if so specified in the Contract Documents.

The Systems shall be tested by operating the systems equipment together as a unit with all related piping, valves, electrical controls and mechanical operations.

The tests shall prove that all equipment and appurtenances of each system are properly installed, free from defects, meet their specified operating cycles and characteristics when operating as part of the system.

Systems with automatic control systems shall be operated continuously by the automatic control system for four continuous hours, or longer if specified in the Contract Documents.

To satisfy the requirements for preliminary testing of equipment and Systems, the Contractor shall submit data per the approved test procedure and receive approval from the Engineer.

C. Final Field Tests of Equipment and Systems:

The following requirements shall be met prior to the final field testing of equipment and systems:

a. All required operating instructions, maintenance manuals, bulletins, and shop drawings shall be approved and distributed unless otherwise specifically allowed by the Engineer.

b. All spare parts shall be delivered unless otherwise specifically allowed by the Engineer

c. The equipment and systems shall be inspected, operated, successfully tested, and adjusted by the manufacturer's representative in the

presence of the Engineer. All instruction sessions for operating personnel shall also be completed unless otherwise specifically allowed by the Engineer. All instrumentation shall be field calibrated and previously tested.

d. After completion of Item c above and when leakage tests of pipelines are completed, the equipment or system shall then be given a final field test.

Equipment and systems shall be subject to final field tests in accordance with the procedures prescribed in the Contract Documents and approved test procedure for each test and as supplemented herein.

Equipment shall be given a running test, at its rated capacity, of normal (start-and-stop) operation and during such test shall demonstrate its ability to operate without vibration or overheating, and shall prove without question its fitness for services in accordance with the approved test procedures. Unless otherwise specified, final field tests of equipment which will be operating continually shall be given a minimum running test of three continuous 8-hour tests for each unit. Other equipment shall be given a running test for a minimum period of four continuous hours, or as otherwise approved by the Engineer. For final field tests of equipment and Systems to be deemed successful, they shall be run continuously and trouble – free in accordance with the approved test procedure for each test, and data shall be submitted and approved by the Engineer.

The Contractor shall provide all labor and materials needed to supply all water or other media needed for final field testing.

After completion of final System and equipment tests, the equipment and systems shall be operated by the City for a two-week period under normal operating conditions. The Contractor shall schedule and have delivered sufficient training and instruction to City personnel to ensure that during the two week test the equipment and Systems will be operated properly and safely. Should the equipment and Systems function normally during this period the equipment and Systems shall have successfully passed the final field tests and will be accepted for additional testing and/or operation by the City.

D. Systems:

The following equipment groupings shall be tested together as Systems, in accordance with the Contract Documents:

a. Interceptor Gates telemetry control systems

b. Interceptor Gates flushing systems

1.17 Field Testing / Quality Control

A. Not Used

1.18 Startup / Demonstration

A. Not Used

1.19 Adjusting / Protection / Cleanup

A. Not Used

END OF SECTION

01 78 24 SPARE PARTS AND MAINTENANCE MATERIALS

GENERAL

1.01 Summary

A. Contractor shall inventory, store, and deliver all spare parts and maintenance materials as shown, specified, and/or required.

B. The following schedule, attached after the end of section designation, is a part of this Section:

Schedule 01 78 24-1, Spare Parts and Maintenance Materials Schedule.

1.02 Payment

A. There is no separate payment provision for this section.

1.03 Related Sections

A. Not Used

1.04 References

A. Not Used

1.05 Description

A. Furnish all spare parts and maintenance materials shown, specified, and/or required by the Contract Documents.

B. Contractor shall provide data for each distinct spare part or maintenance material, in paper and electronic format, as specified herein.

C. Contractor shall attach bar-code tag stickers, furnished by the City, to each distinct spare part or maintenance material.

D. Schedule delivery of all spare parts and maintenance materials for the Work over a reasonable period of time that is acceptable to and in coordination with City the Engineer.

E. All spare parts and maintenance materials shall be turned over to the City in as-new condition and shall be furnished in manufacturers' unopened cartons, boxes, crates, or other protective covering, suitable for preventing corrosion or deterioration, for the maximum length of storage indicated by the part manufacturer.

F. The Contractor shall turn over spare parts and maintenance materials to the City upon Substantial Completion. Contractor shall then place them in permanent storage rooms or areas designated by the City.

G. Contractor shall be fully responsible for loss or damage to all spare parts and maintenance materials until such time they are handed over and accepted by the City.

1.06 Quality Assurance

A. Not Used

1.07 Submittals

A. Submittals shall comply with the requirements of the Contract Documents. In addition, submittals shall include, but not be limited to:

Action Submittals:

a. Submit a list of all spare parts and requisite data:

1) The spare parts and maintenance materials list and data shall be submitted in paper and electronic format:

a) The Engineer will furnish an electronic spreadsheet containing data fields for the Contractor to fill out. The completed spreadsheet shall be submitted to the Engineer for review. The Engineer will provide the approved data sheet to DEP for uploading by DEP to their commercial database system.

b) Refer to Schedule 01 78 24-1, Spare Parts and Maintenance Materials Schedule, located after the "End of Section" designation, for the paper and electronic format.

2) The spare parts and maintenance materials list and data shall be submitted to the City at least 120 CCD prior to delivery.

Information Submittals:

b. Submit a schedule of the intended dates for spare parts and maintenance materials deliveries.

c. Submit a letter of transmittal for each part or maintenance material shipment, including the following information, at a minimum:

1) Date of letter and transfer of parts and materials.

2) Contract title and number.

3) Contractor's name and address.

4) A complete inventory of the parts and materials, listing the applicable Specification Section and equipment item for each.

5) A place for City to sign and confirm receipt of the parts and materials.

1.08 Delivery, Storage, and Handling

A. The Contractor shall deliver spare parts and maintenance materials provided under this Section in accordance with the requirements of the Contract Documents. In addition:

The Contractor shall attach bar-code stickers to each approved spare part or maintenance material, upon receipt.

a. The City shall furnish bar code stickers and transmit the bar code stickers to the Contractor.

b. The sticker for any given part shall be affixed to shipment packaging for that part.

c. If additional stickers are required for split deliveries or re-delivery of previously rejected parts, they shall be furnished by the City and transmitted to the Contractor.

B. The Contractor shall store and handle spare parts and maintenance materials provided under this Section in accordance with the requirements of the Contract Documents. In addition:

Store and handle spare parts and maintenance materials in accordance with manufacturer recommendations.

During construction and prior to acceptance by the City, the Contractor shall store spare parts or maintenance materials in the Contractor's buildings or construction trailers. Storage locations shall have floor, roof, and closed sides, and be in accordance with the part manufacturers' recommendations.

a. Contractor shall protect spare parts and maintenance materials from weather, condensation, and humidity.

b. If the Contractor's assigned location is inappropriate, an alternate storage location shall be used, as designated by the City, and at no additional Cost to the City.

c. Upon placement of each item in the storage location, the item bar-code sticker or tag shall be recorded in the City’s database.

City Plant Personnel reserve the right to inspect each spare part or maintenance material upon delivery for adherence to approved submittals and reject any part or parts in accordance with said inspection.

d. Packaging shall be opened by the Contractor to allow such inspection.

e. City Plant Personnel reserve the right to reject any spare parts or maintenance materials during such inspection.

f. Any spare parts or maintenance materials rejected shall be taken back by Contractor and the Contractor shall resubmit a new spare part or maintenance material at no additional Cost to the City.

g. The Contractor shall provide Plant personnel with access, and transport if required, to the Contractor's storage facilities.

After acceptance of delivered spare parts and maintenance materials, the Contractor shall place accepted spare parts and maintenance materials in a storeroom directed by City.

h. All spare parts and maintenance materials shall be identified, assigned a storeroom and location as directed by the City, delivered, shelved, and logged into the shelf or bin via scanning the barcode to the database referenced herein.

1.09 Spare Parts, Special Tools, and Supplies

A. Not Used

1.10 Special Warranty Provisions / Guarantee Periods

A. Not Used

PRODUCTS

1.11 Manufacturers

A. Not Used

1.12 Materials / Equipment

A. Not Used

1.13 Fabrication / Assembling / Finishes

A. Not Used

1.14 Source Quality Control / Shop Tests

A. Not Used

EXECUTION

1.15 Examination / Preparation

A. Not Used

1.16 Implementation

A. Data for each distinct spare part or maintenance material, per approved submittals, shall be recorded and entered into the existing computer database, provided by the City and as directed by the Engineer.

Reference Schedule 01 78 24-1, Spare Parts and Maintenance Materials Schedule, located after the End of Section designation.

Data shall include, but not necessarily be limited to:

a. Contract number.

b. Specification Section number.

c. Description of equipment for which part is being provided.

d. Equipment number (per DEP numbering system).

e. Manufacturer of part, manufacturer's part number.

f. Supplier / vendor for part, with name and contact information.

g. Unit price of part.

h. Quantity required to be delivered.

No spare parts or maintenance materials shall be accepted by the City unless all data, hereinabove, has first been entered into the database and barcodes have been applied as specified.

1.17 Field Testing / Quality Control

A. Not Used

1.18 Startup / Demonstration

A. Not Used

1.19 Adjusting / Protection / Cleanup

A. Not Used

SCHEDULE 01 78 24-1

SPARE PARTS AND MAINTENANCE MATERIALS SCHEDULE

CONTRACT _____SUBMITTAL DESCRIPTION _____

EQUIPMENT SPEC. SEC _____TRANS # _____REVIEW # _____

PART DESCRIPTION	MANUFACTURER NAME	MANUFACTURER PART NO.	VENDOR NAME	VENDOR PART NO.	COMPONENT Y/N?	COMPONENT SERIAL #	QUANTITY ON ORDER (PER SPEC)

END OF SECTION

01 78 25 OPERATIONS AND MAINTENANCE MANUALS

GENERAL

1.01 Summary

A. Section Includes:

General requirements.

Operation and Maintenance Manual requirements.

Binding and format requirements.

Submittals.

1.02 Payment

There is no separate payment provision for this Section.

1.03 Related Sections

A. Not Used

1.04 References

A. Not Used

1.05 Description

A. As a prerequisite to obtaining payments in excess of 50 percent of the equipment cost for equipment furnished under this Contract except for specification section 40 05 59.01 – Interceptor Gates, the Contractor shall prepare, submit and obtain the City's approval, as designated by "Approved," of an operation and maintenance Manual ("Manual") for each item of equipment supplied under the Contract. Approval is a prerequisite for continuing payments for equipment furnished by the Contractor, providing instructional services and equipment start-up.

B. Each Manual shall be prepared especially for each installation and shall include all pertinent and legible instructions, preventative maintenance instructions, technical bulletins and other printed matter required to provide accurate and comprehensive information for the safe and proper operation, maintenance and repair of the equipment.

C. Operation and Maintenance Manual Requirements:

The Manuals shall include, but not be limited to, the following:

a. Complete, detailed written operating instructions for each product or piece of equipment including: equipment function; operating characteristics; limiting conditions; operating instructions for startup, normal and emergency conditions; regulation and control; hydraulic oil replacement; and shutdown.

b. Complete, detailed written preventive maintenance instructions, including all information and instructions required to keep a product or piece of equipment properly lubricated, adjusted and maintained so that the item functions economically throughout its full design life.

Preventive maintenance instructions include, but are not limited to, the following:

1) A written explanation with illustrations for each preventive maintenance task.

2) Recommended schedule for execution of preventive maintenance tasks.

3) Lubrication charts.

4) Table of alternative lubricants.

5) Troubleshooting instructions.

6) List of required maintenance tools and equipment.

7) Nameplate data of each component, year of installation, Contract number and Specification number.

c. Name, address and telephone number of the manufacturer and the manufacturer's local representative(s).

d. Installation instructions.

e. Emergency operating instructions and capabilities.

f. Troubleshooting and corrective maintenance (repair) procedures.

g. Drawings suitable for assembly and disassembly of entire system or unit, and each component, and approved wiring and control diagrams, all as required for operation, maintenance and repair of the equipment supplied. Drawings shall be black on white, clearly legible and no larger than 11" x 17".

h. Parts list with current prices and ordering information.

i. List of recommended spare parts and the recommended number of each.

j. Name, address and telephone number of nearest parts supply house and nearest repair service center.

k. Warranties, guarantees, bonds and service contracts.

l. Long-term and short-term manufacturer's recommended equipment storage procedures.

m. Written explanations of all safety considerations relating to operation and maintenance procedures.

n. Name, address and telephone number of manufacturer, manufacturer's local service representative, and subcontractor or installer.

o. Copy of all approved shop drawings.

p. Catalogs, diagrams, schematics, drawings, instruction bulletins and manuals marked by underlining, checking, the use of arrows or the

obliteration or removal of extraneous data, so as to pertain only to the specific equipment item for which the manual is supplied.

q. Complete electrical schematics and wiring diagrams. Complete wiring between terminal points must be shown. Computerized diagrams are not acceptable.

Reference to features and elements of equipment, such as operational limits of time, speed, pressure, temperature, etc. shall be clear, complete and compatible with authoritative published engineering reference documents. All functional components, electrical systems, equipment, etc. shall be shown on diagrams and discussed in the text so as to identify their proper system relationship. Operation, service, trouble-shooting, checkout and in-line and bench repair procedures, identifying specific system characteristics of the equipment shall be provided. The information shall include recommended procedures and frequencies for preventive maintenance such as inspection, adjustment, lubrication, calibration and cleaning.

Equipment parts shall be identified by manufacturer's part number and located with relation to other components of the equipment utilizing "exploded" type drawings for clarity, if required. Complete parts lists shall be included, which indicate the part number, the part description, applicable serial and model numbers, current unit prices and the name, address and telephone number of the nearest equipment manufacturer's representative and nearest service and spare parts warehouse. Complete instructions for the ordering of all replaceable parts shall be noted in this section of a Manual. Recommendations as to spare parts and spare inventory levels shall be made. Where pertinent, lead time and shelf life values and preservation, packaging and labeling methods shall be also recommended.

All copyrighted material used in the Manual or in any operation required in the performance of the Contract will be preceded by the Contractor obtaining the copyright holder's written permission on behalf of City to use such material in perpetuity.

D. Binding and Format Requirements:

Each Manual shall be bound in a durable, permanent, hard cover binder of one (more if required) volume with a complete index of the Manual's contents arranged by subject matter and in order of presentation in each volume. Applicable equipment item numbers, as shown in the Contract Documents shall be prominently included at their appropriate location in the index. The title of the Manual shall be securely affixed to the binder in two places: the front cover and the binder back edge. The title shall identify the Project by number and name, location of the site, state the volume is an O&M Manual, generally classify the equipment and state the manufacturer's name and equipment model number.

Intermediate submittals of the Manual for approval by the Engineer need not be hard bound.

Use 8½-inch by 11-inch paper of high rag content and quality. Larger drawings or illustrations (no larger than 11" x 17") are acceptable if neatly folded to the specified size in a manner which will permit easy unfolding without removal from the binder. Provide reinforced punched binder tab. Or provide fly-leaf for each product.

All text must be legible typewritten or machine printed originals or high quality copies of same.

Each page shall have a binding margin of approximately 1½ inches and be punched for placement in a three-ring loose-leaf or triple post binder. Provide binders. Identify each binder with the following:

a. Title "OPERATING AND MAINTENANCE MANUAL"

b. Project title and number.

c. Contract title and number.

d. Identity of building or structure as applicable.

e. Identity of general subject matter covered.

Use dividers and indexed tabs between major categories of information such as operating instructions, preventive maintenance instructions, or other. When necessary, place each major category in a separate binder.

Provide a Table of Contents for each binder. Identify products by their functional names in the Table of Contents and at least once in each chapter or section. Thereafter, abbreviations and acronyms may be used if their meaning is explained in a table in the back of each binder. Use of model or catalog numbers or letters for identification is not acceptable.

E. Submittals:

The Contractor's submittal to the Engineer for approval shall consist of three (3) complete sets of each Manual and three (3) copies of an itemized listing providing cross-references between the Specification, the approved Shop Drawings, and the Manual submittal.

A transmittal will be returned to the Contractor indicating the status of the Manual and will include a tabulation of any pages being returned with review comments and noting any extra pages required clarifying or amplifying the comments. Copies of only the pages containing comments and any additional pages needed to clarify or amplify the comments will be attached to the transmittal. The status of the Manual will be noted on the front page of the Manual, which will also be attached to the transmittal, and will be stamped either, "Furnished as Submitted" or "Furnish as Corrected", when the Manual submittal substantially conforms to the requirements of this Section and requires minor corrections; or "Revise and Resubmit" when the Manual submittal is considered inadequate, inaccurate or lacking essential information.

The submitting Contractor shall rectify all submittals annotated "Furnish as Corrected," or "Revise and Resubmit" within 15 days of receipt of such notice by replacing pages or adding additional data, as required. The Manual's Index of Contents and the itemized, cross-referenced listing shall be revised to reflect all revisions or additions made. Then, three (3) copies of the revised material shall be resubmitted to the Engineer for approval.

When the status of the Manual is stamped "Rejected," a transmittal to the submitting Contractor will return the copies of the Manual intact with the reason for the rejection stated. The Manual will be stamped "Rejected" when the submittal is considered illegible, or does not contain a complete index of contents and/or an itemized list of cross references, or is so incomplete and lacking in required documentation as to preclude a meaningful review by the Engineer. Within 15 days of receipt of such notice the submitting Contractor shall revise the Manual and resubmit to the Engineer for approval.

Final Approved Copies of the Manuals:

a. After a Manual submittal receives final approval status, signified by the annotation "Furnish as Submitted", the Contractor shall furnish the final Manual to the City in the quantities and formats as required by the City.

1.06 Quality Assurance

A. Not Used

1.07 Submittals

A. Not Used

1.08 Delivery, Storage, and Handling

A. Not Used

1.09 Spare Parts, Special Tools, and Supplies

A. Not Used

1.10 Special Warranty Provisions / Guarantee Periods

A. Not Used

PRODUCTS

1.11 Manufacturers

A. Not Used

1.12 Materials / Equipment

A. Not Used

1.13 Fabrication / Assembling / Finishes

A. Not Used

1.14 Source Quality Control / Shop Tests

A. Not Used

EXECUTION

1.15 Examination / Preparation

A. Not Used

1.16 Implementation

A. Not Used

1.17 Field Testing / Quality Control

A. Not Used

1.18 Startup / Demonstration

A. Not Used

1.19 Adjusting / Protection / Cleanup

A. Not Used

END OF SECTION

01 79 05 EQUIPMENT START-UP AND TRAINING

GENERAL

1.01 Summary

A. Section Includes:

Representatives of Equipment Manufacturers

Start-up Services

Training of plant personnel

Lesson plans

Training aids

Qualifications of training specialists

1.02 Payment

A. There is no separate payment provision for this Section.

1.03 Related Sections

A. Section 01 75 10 – Preliminary and Final Field Tests

B. Section 40 05 59.01 – Interceptor Gates

C. Section 40 05 59.02 – Interceptor Gate Installation

1.04 References

A. Not Used

1.05 Description

A. For equipment start-up and training requirements specific to equipment furnished by the interceptor gate manufacturer, refer to Section 40 05 59.01 – Interceptor Gates.

B. Representatives of Equipment Manufacturers:

The Contractor shall provide the services of qualified factory trained representatives of the equipment manufacturers, who shall provide the following services:

a. Supervise and assist in the installation of the equipment to ensure a proper installation of the equipment.

b. Check the installation of the equipment and make all necessary adjustments prior to placing the equipment in service.

c. Supervise the preliminary and final equipment and system field test work specified in Section 01 75 10 - Preliminary and Final Field Tests.

1) Additional acceptance testing supervision resulting from the failure to meet the specified performance requirements shall be at the Contractor's expense.

d. Conduct training of City personnel as specified herein. One day of training by a manufacturer's representative shall be defined as a minimum of eight (8) hours on-Site.

The manufacturers' representatives shall devote, at a minimum, the amount of full time specified under the Contract Documents.

The Contractor shall coordinate all equipment start-up services and training with the City and the manufacturers.

C. Start-Up Services:

During the equipment start up and initial operating period, the Contractor shall furnish the services of factory trained specialists of the equipment manufacturers for the equipment to assist in the start-up and operation of the equipment.

D. Training:

As part of these services, the City will provide the necessary personnel to be trained in the operation and maintenance of the equipment. Training shall occur after the initial operational period is complete.

The training shall consist of both classroom and field instruction. The purpose of field instruction shall be to reinforce topics covered in the classroom and to identify the location of any valves, pushbuttons, control panels switches, and other equipment required for operation; and to identify the location of any maintenance equipment such as grease fittings, oilers, isolation valves, safety lockout switches, and other equipment.

All training shall take place at the Work Site at a place specified by the City and shall be conducted by qualified training specialists.

Separate training sessions shall be conducted for City mechanical operations and maintenance personnel and for City electronic and electrical maintenance personnel.

The Contractor shall coordinate the manufacturers training services with the City, providing a minimum of fourteen (14) days prior notice of training, subject to the approval of the City.

In order to provide training for an adequate number of City operation and maintenance personnel, a minimum of two 8-hour training days shall be provided for each item of equipment, unless otherwise specified in the Contract Documents.

Training shall be limited to no more than three days per week. No training shall be conducted on Mondays and Fridays.

The Contractor shall deliver all training material to the Engineer a minimum of 14 days prior to the scheduled training.

E. Lesson Plans:

The Contractor shall submit the equipment manufacturer's lesson plans, which shall include specific information about each item of equipment or equipment system, including controls. Lesson plans shall include but not be limited to the following information and meet the following requirements:

a. The Contractor shall submit the equipment manufacturer's lesson plans for approval by the Engineer no less than sixty (60) days prior to the date that the training is to take place.

b. Lesson plans shall indicate the estimated duration of each segment of the training and the training audience that the instruction is to address. The training audience refers to City mechanical operation and maintenance personnel and City electronic/electrical maintenance personnel, as appropriate.

c. The lesson plan shall indicate when training aids are used or referred to during the course of instruction.

d. An outline of required lesson plan contents is included below:

Equipment Description:

e. Purpose and function of equipment and auxiliary equipment and systems.

f. Physical arrangement of equipment components and electrical supply.

g. General function of controls, including automatic and manual operation, interlocks, and shutdowns.

Equipment Operation:

h. Operating requirement for equipment to perform satisfactorily.

i. Typical operating characteristics.

j. Start-up and shutdown procedures.

k. Use of controls.

Equipment Monitoring:

l. Recommended routine instrument readings and operational checking.

m. Early warning signs of developing operational or equipment problems.

n. Procedures for handling non-routine problems such as alarms, power failures, component failures, etc.

Equipment operational trouble-shooting procedures.

Safety and Housekeeping:

o. Safety features of the equipment.

p. Safe practices.

q. Housekeeping practices.

Description of the use of the equipment manufacturer's O&M Manual as regards operation.

Preventive Maintenance Requirements:

r. Maintenance needs for equipment.

s. Identification of procedure to satisfy maintenance need (relate to equipment manufacturer's O&M Manual, which should have detailed descriptions of maintenance procedures).

t. Outline or summarize procedures.

u. Recommended schedule for performing preventive maintenance.

v. Provide preventive maintenance record forms (if available).

Maintenance Inspection Program:

w. Parts, components and areas of equipment to inspect for routine preventive maintenance.

x. Recommended frequency of inspection.

y. Inspection procedures.

z. Problem identification.

Maintenance Trouble-shooting:

aa. Sections in O&M Manual detailing trouble-shooting procedures.

bb. Summarize trouble-shooting procedures.

cc. Testing equipment used in trouble-shooting.

1) Demonstration of use of specialized testing equipment if supplied with equipment.

2) Other testing equipment.

dd. Tests used to verify trouble-shootings findings.

Disassembly and Assembly:

ee. Summarize disassembly and assembly procedures.

ff. O&M Manual coverage of subject.

gg. Testing to verify success of corrective maintenance.

Equipment Calibration:

hh. Calibration needs and tolerances.

ii. Calibration equipment.

jj. O&M Manual listing of calibration ranges, tolerances and settings.

Name, address and telephone number of nearest parts supply house and nearest repair service center.

Warranty information and service contract description, if applicable.

F. Training Aids:

Training aids shall be used as an integral part of the training program. Training aids shall include text and/or pictorial handouts specific to the equipment supplied. Handouts shall be legible and printed on good quality stock. Handouts shall be submitted when lesson plans are submitted.

Additional training aids shall be used for maximum training effectiveness and shall include the following as appropriate:

a. Audio-visual aids, for example, videos, PowerPoint presentations, flow charts, posters, diagrams, and catalogue cuts.

b. Models and samples, for example, cutaways, spare parts, tools, miniature models, equipment assemblies, and damaged parts.

The use of additional training aids shall be identified in the lesson plan, and a description of the additional training aids shall be given.

1.06 Quality Assurance

A. The Contractor shall submit the equipment manufacturer's documentation of the qualifications of their proposed training specialists for approval by the Engineer sixty (60) days prior to the date of proposed training. The documentation shall include the experience of the training specialists in operation and maintenance of the equipment and a summary of training experience.

B. Only those training specialists whose qualifications have been approved by the Engineer shall conduct training.

1.07 Submittals

A. Not Used

1.08 Delivery, Storage, and Handling

A. Not Used

1.09 Spare Parts, Special Tools, and Supplies

A. Not Used

1.10 Special Warranty Provisions / Guarantee Periods

A. Not Used

PRODUCTS

1.11 Manufacturers

A. Not Used

1.12 Materials / Equipment

A. Not Used

1.13 Fabrication / Assembling / Finishes

A. Not Used

1.14 Source Quality Control / Shop Tests

A. Not Used

EXECUTION

1.15 Examination / Preparation

A. Not Used

1.16 Application

A. Not Used

1.17 Field Testing / Quality Control

A. Not Used

1.18 Startup / Demonstration

A. Not Used

1.19 Adjusting / Protection / Cleanup

A. Not Used

END OF SECTION

05 05 23.01 WELDING

GENERAL

1.01 Summary

A. The Contractor shall perform all field welding as specified herein and as indicated on the Contract Drawings. The work shall include, but not limited to, the following items:

Procedure specifications.

Procedure qualifications.

Welder, welding operator and tacker qualifications.

Inspection.

Testing and repair of defective welds.

1.02 Payment

A. There is no payment provision for this section.

1.03 Related Sections

A. All Common Works specifications sections (Division 01) apply to this Section.

B. Requirements from the following sections also apply to this Section:

Section 05 06 00.01 - Schedules for Stainless Steel Work

Section 05 50 00 – Metal Fabrications

1.04 References

A. Definitions

Definitions of welding terms shall be in accordance with ANSI/AWS A3.0.

B. Reference Standards:

AISC-04 - Specification for Structural Steel Buildings - Allowable Stress Design and Plastic Design.

ANSI/AWS A2.4 - Standard Symbols for Welding, Brazing and Nondestructive Examination.

ANSI/AWS A3.0 - Standard Welding Terms and Definitions.

ANSI/AWS D1.1 - Structural Welding Code - Steel.

ANSI/AWS D1.4 - Structural Welding Code – Reinforcing Steel.

ANSI/AWS D1.6 - Structural Welding Code - Stainless Steel.

AWS Z49.1 - Safety in Welding and Cutting and Allied Processes.

1.05 Description

A. All welding shall be performed in accordance with ANSI/AWS D1.1 and ANSI/AWS D1.6.

B. All structural welding and gas cutting shall conform to the requirements of the American Welding Society (AWS), American Society of Mechanical Engineers (ASME), NYC Department of Buildings (DOB) and the New York City Construction Code. All welding of pipe, fittings and pipeline equipment shall be performed by qualified welders as specified by the latest requirements of the ASME and AWS codes and their supplements, as applicable.

C. Welders shall be certified in compliance with Section IX Welding Qualifications of the ASME Boiler and Pressure Vessel Code or AWS D1.1 through D1.6, as applicable and as approved by the Engineer, and shall be qualified by an independent testing laboratory approved by the Engineer.

D. Welding shall not be started until welding procedures, welders, welding operators and tackers have been qualified and copies of all records and reports submitted and approved by the Engineer.

E. The Contractor shall be responsible for the quality of welding and shall maintain records of the test results obtained from the welding procedure, welder, welding operator and tackers performance qualifications.

F. Each weld shown or indicated on the Contract Drawings shall be made as specified on the approved procedure specifications provided to cover each type of weld. Welding of any special steel shall conform to the written instructions of the steel manufacturer.

G. Test specimens shall be prepared by the Contractor for each type of welded joint as designated in Article 1.08, Welding Procedure Qualifications. Destructive tests of specimens for procedure and welder qualifications shall be conducted in accordance with ANSI/AWS D1.1, Section 4, Qualifications, and the requirements specified herein.

H. Symbols

Symbols on the Contract Drawings, shop drawings and erection drawings shall be in accordance with ANSI/AWS A2.4.

I. Safety Precautions

Safety precautions during welding shall conform to AWS Z49.1.

J. Welding Requirements

Contract Drawings will include the following information:

a. Size, length, type and location of welds.

b. Location of welds for which non-destructive testing is required. When location of non-destructive testing is not shown, it will be indicated by the Engineer in the field.

Workmanship and techniques for welded construction shall conform to the requirements of ANSI/AWS D1.1 and AISC-04. When ANSI/AWS D1.1 and AISC-04 are in conflict, the requirements of ANSI.AWS D1.1 shall govern.

Welding of reinforcing shall conform to the requirements of ANSI/AWS D1.4 and the Contract requirements. Welds shall develop a minimum of 85,000 psi tensile strength. Bars to be welded shall be cut by means of an oxyacetylene torch or by sawing. Ends shall be free of dirt, oxide

scale, oil, grease, or other foreign matter. Sheared ends of bars shall be trimmed back at least 1/2-inch by sawing or flame cutting. Preheat and interpass temperature shall conform to ANSI/AWS D1.4. Bars having a carbon equivalent content in excess of 0.50 percent shall not be welded.

Where dissimilar steel are welded together, the procedure used shall be the same as the one used for the lower strength steel.

All groove welds shall be 100 percent complete penetration welds as defined in ANSI/AWS D1.1 or shown in ANSI/AWS D1.4 for reinforcing steel, regardless of whether a backup plate is shown or whether the supplementary backing weld or melt-through symbol is included, in each groove-weld symbol shown unless partial penetration is included in the weld symbol.

Gun welded studs shall conform to the requirements of ANSI/AWS D1.1, Section 7.

Upon completion of welding, all weld splatter, flux, slag and burrs left by attachments shall be removed. Welds shall be repaired to produce a workmanlike appearance with uniform weld contours and dimensions. All sharp corners of material which is to be painted or coated shall be ground to a minimum of 1/32-inch on the flat.

K. Standard of Acceptance

Dimensional tolerances for welded construction, details of welds, and quality of welds shall be in accordance with the applicable requirements of ANSI/AWS D1.1, ANSI/AWS D1.4 and the Contract Drawings.

The welding shall be subject to inspection and tests in the shop and project site. Inspection and tests in the shop will not relieve the Contractor of the responsibility to furnish weldments of satisfactory quality.

All welding exhibiting any cracks, either in the weld metal or the parent metal, will be rejected.

Incomplete fusion or lack of penetration will not be allowed, and the weld will be rejected.

Welds, other than stud welds, are acceptable if inspection indicates conformance within the following limitations:

a. Undercut shall not be more than 1/32-inch deep.

b. Convexity or reinforcement of a weld face shall not exceed the limits shown in ANSI/AWS D1.1, Section 3 and there shall be no overlap.

c. Slag inclusions, porosity and other fusion defects less than 1/16-inch in greatest dimension will be allowed if well dispersed and the sum of the greatest dimensions in any linear inch of welded joint does not exceed 3/8-inch.

d. Slag inclusions, porosity and other fusion defects 1/16-inch or larger in greatest dimension will be allowed providing such defects do not exceed the limits specified in ANSI/AWS D1.1.

When materials or workmanship do not conform to the acceptance requirements, the Engineer reserves the right to reject material or workmanship or both at any time before final acceptance of the structure containing the weldment.

L. Corrections and Repairs

General: In lieu of rejection of an entire piece or member containing welding which is unsatisfactory or which indicates inferior workmanship, the corrective measures listed hereinafter may be permitted by the Engineer. The Engineer's specific approval must be obtained before making each correction. Corrective measures shall be made at the Contractor's expense and to the satisfaction of the Engineer and/or an acceptable independent testing lab.

Defective or unsound welds or base metal shall be corrected either by removing and replacing the entire welds, or as follows:

a. Excessive convexity and overlap shall be reduced by removal of excess weld metal.

b. Any concavity of weld, crater, undersize welds or undercutting shall be corrected by cleaning and depositing additional weld metal.

c. Excessive weld porosity, slag, inclusions or incomplete fusion shall be repaired by removing defective portions and rewelding.

d. Cracks in weld or base metal shall be repaired by removing crack throughout its length, including sound weld metal 2 inches beyond each end of the crack and rewelding.

The removal of defective weld metal or portions of the base metal shall be done by chipping, grinding, oxygen cutting, oxygen gouging, or air carbon-arc and in such a manner that the remaining weld metal or base metal is not nicked or undercut. Defective portions of the weld shall be removed without removal of the base metal.

Additional weld metal shall be deposited using an electrode smaller than that used for making the original weld, and not more than 5/32-inch diameter. The surface shall be cleaned thoroughly before welding.

Caulking of welds shall not be permitted.

Improperly fitted parts may be cut apart and rewelded. Members distorted by welding shall be straightened by mechanical means or by carefully supervised application of a limited amount of localized heat.

e. The temperature of heated areas shall not exceed 1,200 degrees Fahrenheit (a dull red color). Temperature shall be carefully measured with temperature indicating crayons during the heating operation.

f. Parts to be heated for straightening shall be substantially free of stress and from external forces, except those stresses resulting from mechanical means used in conjunction with the application of heat.

Peening of welds is prohibited.

1.06 Quality Assurance

A. Welding Procedure Qualifications

General: Except for prequalified or previously qualified procedures, the Contractor shall qualify the welding procedure specifications for any welding procedure performed in the fabrication of weldments.

Welding procedure specification and the results of the procedure qualification test for each type of welding, which requires procedure qualifications, shall be submitted for approval. Approval of any procedure, however, will not relieve the Contractor of the sole responsibility for producing a finished structure meeting all the requirements of these Specifications. This information shall be submitted on the forms in Annex E of ANSI/AWS D1.1.

a. Procedures, when qualified, become the welding procedure specifications and are to be followed in making welds on the subject materials and provide a means of assuring reproducible results and quality control.

b. Separate procedure specifications shall be prepared for each type of weld.

c. Welding procedure specifications shall be individually identified and shall be referenced on the shop drawings and erection drawings,or shall be suitably keyed to the Contract Drawings.

Previous Qualifications: Welding procedures previously qualified by test may be acceptable for this Contract without requalification if the following conditions are met:

d. Testing was performed by the Contractor’s welder at an approved, AWS Accredited Test Facility.

e. The qualified welding procedure conforms to the requirements of this Section and is applicable to welding conditions encountered under this Contract.

f. The welder, welding operator and tacker qualification tests conform to the requirements of this Section and are applicable to welding conditions encountered under this Contract.

Prequalified Procedures: Welding procedures which are considered prequalified as specified in ANSI/AWS D1.1 and ANSI/AWS D1.4, will be accepted without further qualification.

g. The Contractor shall submit for approval a listing and an annotated drawing to indicate the joints not prequalified.

h. Procedure qualification shall be required for the joints not prequalified.

Retests: If welding procedure fails to meet the requirements of ANSI/AWS D1.1 or ANSI/AWS D1.4, the procedure specification shall be revised and requalified.

i. At the Contractor's option, with the Engineer's approval, welding procedure may be retested in accordance with the standards.

j. If the welding procedure is qualified through retesting, all test results, including those of test welds that failed to meet the requirements, shall be submitted with the welding procedure.

B. Welder, Welding Operator and Tacker Qualification

SECTION 05 05 23.01 – WELDING

APPURTENANT WORKS – IG/PC

General Information: Each welder, welding operator and tacker assigned to work on this Contract shall be certified in conformance with ANSI/AWS D1.1, Section 4. Welders performing field welding shall also be New York City certified, and all welding shall be done in conformity with the NYBC and BS&A.

Certificates: Before assigning any welder, welding operator or tacker to work under this Contract, the Contractor shall submit to the Engineer the names of the welders, welding operators and tackers to be employed and certification that each individual is qualified as specified.

a. The certification shall state the type of welding and positions for which the welder, welding operator or tacker is qualified, the code and procedure under which the individual is qualified, the date qualified, and the name of the firm and person certifying the qualification tests.

b. The certification shall be kept on file at the job site by the Contractor. The certification shall be kept current for the duration of the Contract

c. All shop welding shall be performed in accordance with the relevant work-specific requirements in the Specifications and Contract Drawings.

d. If existing certification is not approved or not submitted, then the welders/welding shop/tack welders must be qualified in accordance with the above procedures and tests, as administered by an inspection agency approved by the Engineer. All costs associated with the required tests for certification and/or retests, if any, shall be borne by the Contractor. The Quality Assurance Section shall be given a notice of not less than 5 business days prior to such tests and may elect to witness any or all of these tests

e. Any deviation from the above shall not be permitted without a written waiver from the City or the City's designee.

Identification of Welds: The Contractor shall assign each welder, welding operator or tacker an identifying number, letter or symbol which shall be used to identify all welds made by that person. For identification, the welder, welding operator or tacker shall apply the assigned symbol adjacent to the weld by means of a rubber stamp, felt tipped marker with waterproof ink or other methods that do not cause an indentation in the metal. Identification with die stamps or electric etches shall not be allowed.

Record of Welds: The Contractor shall maintain a record of all welders, welding operators and tackers employed on the Contract showing the date and results of tests and the identification mark assigned to each person. These records shall be certified by the Contractor and copies of the records shall be furnished to the Engineer.

Previous Qualifications: At the discretion of the Engineer, welders, welding operators and tackers qualified by test within the previous 6 months may be accepted for this Contract without requalification if all of the following conditions are met:

f. Copies of the welding procedure specifications, the procedure qualification test records, and the welder, welding operator, and tacker

qualification test records are submitted and approved in accordance with the requirements shown on the Contract Drawings.

g. Testing was performed by an approved testing laboratory.

h. The previously-qualified welding procedure conforms to the requirements of this Section and is applicable to welding conditions encountered under this Contract.

i. The welder, welding operator and tacker qualification tests conform to the requirements of this Section and are applicable to welding conditions encountered under this Contract.

Renewal of Qualifications: Requalification of a welder or welding operator shall be required under any of the following conditions:

j. It has been more than 6 months since the welder or welding operator has used the specific welding process for which they are qualified.

k. There is specific reason to question the welder or welding operator's ability to make welds that meet the requirements of these Specifications.

l. The welder or welding operator was qualified by an employer other than those firms performing work under this Contract, and a qualification test has not been taken within the past 12 months. Records showing periods of employment, name of employer where welder, or welding operator, was last employed, and the process for which qualified shall be submitted as evidence of conformance.

m. A tacker who passes the qualification test shall be considered eligible to perform tack welding indefinitely in the positions and with the processes for which they are qualified, unless there is some specific reason to question the tacker's ability. In such a case, the tacker shall be required to pass the prescribed tack welding test.

1.07 Submittals

A. The Contractor shall prepare and submit Shop Drawings for approval of the Engineer. Submittals shall include, but not be limited to, the following:

Erection drawings, and catalog data on welding equipment and materials.

Welding procedure specifications.

Welding procedure qualifications and test records.

Welder, welding operator and tacker qualifications and test records.

Records of tests and inspections of installed welds.

Testing or inspection agency selection.

1.08 Delivery, Storage, and Handling

A. Not Used

1.09 Spare Parts, Special Tools, and Supplies

A. Not Used

1.10 Special Warranty Provisions / Guarantee Periods

A. Not Used

PRODUCTS

1.11 Manufacturers

A. Not Used

1.12 Materials / Equipment

A. All welding equipment, electrodes, welding wire and fluxes shall be capable of producing satisfactory welds when used by a qualified welder or welding operator performing qualified welding procedures.

B. All welding equipment and materials shall comply with the applicable requirements of ANSI/AWS D1.1 and ANSI/AWS D1.4.

C. Electrodes for Welding

Electrodes for welding aluminum shall comply with the Aluminum Association Specifications and AWS D1.2.

Electrodes for welding stainless steel and other metals shall comply with AWS A5.4.

Electrodes for welding carbon steel shall comply with AWS A5.5.

1.13 Fabrication / Assembling / Finishes

A. Not Used

1.14 Source Quality Control / Shop Tests

A. Not Used

EXECUTION

1.15 Examination / Preparation

A. Not Used

1.16 ApplicationApplication

A. Not Used

1.17 Field Testing / Quality Control

A. Supervision

All shop and field welding shall be under the immediate supervision of a representative of a standard testing agency or an approved inspection agency reporting directly to, and under the control of, the City.

Procedures and techniques for inspection shall be in accordance with the applicable requirements of ANSI/AWS D1.1. The Contractor shall submit the name of such agency to the Engineer for approval before starting work.

The costs of all welding inspections and tests shall be borne by the Contractor

All welds shall be inspected visually by the Engineer in accordance with Section V of the ASME Code, or D1.1, Clause 6, Table 6.1 as approved by the Engineer.

B. Inspection and Tests

The Engineer will make periodic checks of each welder to determine that welds are being made as specified in the approved procedure specifications. Welding speed may be estimated.

All welds will receive 100 percent visual inspection to determine weld size and profile, surface cracks, overlap, and undercut.

a. The Contractor shall submit the name of such testing agency to the Commissioner for approval before starting Work.

1) All shop and field welds in structural steel shall be visually inspected by an AWS qualified welding inspector, whom shall be approved by the Engineer. The Contractor shall furnish a letter of certification for each welded connection stating that these requirements have been met.

2) The costs of all welding supervision and inspections shall be borne by the Contractor. The Contractor shall engage inspectors to inspect welded connections and to perform tests and prepare test reports.

3) Ten (10) percent of all butt and bevel welds which extend continuously for 24 inches or less will be completely tested in accordance with AWS D1.1, Part B, Radiographic Testing of Welds, Chapter 6. All butt and bevel welds which extend continuously for more than 24 inches will be radiographically spot tested at intervals not exceeding 36 inches.

4) Welds that are required by the Engineer and/or inspectors to be corrected shall be corrected or redone and retested as directed, at the Contractor's expense and to the satisfaction of the Engineer and/or an acceptable independent testing lab.

The City reserves the right to perform any additional test on any weld, including liquid penetrant, magnetic particle, radiographic, and ultrasonic. The costs of such testing will be borne by the Contractor if unsatisfactory welds are discovered, or by the City if the welds are satisfactory.

C. Not Used

1.18 Startup / Demonstration

A. Not Used

1.19 Adjusting / Protection / Cleanup

A. Not Used

END OF SECTION

05 05 23.02 MISCELLANEOUS METAL FASTENINGS

GENERAL

1.01 Summary

A. The Contractor shall furnish all materials, labor, and equipment required to provide all metal fastening in accordance with the Contract Drawings and as specified herein.

1.02 Payment

A. There is no payment provision for this Section.

1.03 Related Sections

Section 05 05 23.01 - Welding.

1.04 References

A. Definition:

No definition of additional terms is required for this Section.

B. Reference Standards:

ASTM International (ASTM)

a. ASTM A 36 - Carbon Structural Steel.

b. ASTM A 307 - Carbon Steel Bolts and Studs, 60,000 psi Tensile Strength.

c. ASTM A 489 - Carbon Steel Lifting Eyes.

d. ASTM A 563 - Carbon and Alloy Steel Nuts.

e. ASTM B 348 - Titanium and Titanium Alloy Bars and Billets.

f. ASTM D 1785 - Standard Specification for Polyvinyl Chloride (PVC) Plastic Pipe, Schedules 40, 80 and 120.

g. ASTM E 488 - Standard Testing Method for Strength of Anchors in Concrete Elements

h. ASTM E 1109 - Test Method for Strength of Power-Actuated Fasteners Installed in Structural Members

i. ASTM E 1512 - Test Method for Testing Bond Performance of Bonded Anchors

j. ASTM F 436 - Specification for Hardened Steel Washers Inch and Metric Dimensions

k. ASTM F 467 - Nonferrous Nuts for General Use.

l. ASTM F 593 - Stainless Steel Bolts; Hex Cap Screws, and Studs.

m. ASTM F 594 - Stainless Steel Nuts.

n. ASTM F 1554 - Specification for Anchor Bolts, Steel, 36, 55 and 105 ksi Inch and Metric Dimensions

o. ASTM F 3125 - Specification for High Strength Structural Bolts, Steel and Alloy Steel, Heat Treated 120 ksi and 150 ksi, Minimum Tensile Strength Inch and Metric Dimensions

American Concrete Institute (ACI)

p. ACI 355.2 - Qualification of Post-Installed Mechanical Anchors in Concrete

q. ACI 355.4 - Qualification of Post-Installed Adhesive Anchors in Concrete

International Code Council – Evaluation Service (ICC-ES)

r. ICC-ES AC01 - Acceptance Criteria for Expansion Anchors in Masonry Elements

s. ICC-ES AC58 - Acceptance Criteria for Adhesive Anchors in Masonry Elements

t. ICC-ES AC60 - Acceptance Criteria for Anchors in Unreinforced Masonry Elements

u. ICC-ES AC70 - Acceptance Criteria for Fasteners Power-Driven into Concrete, Steel and Masonry Elements

v. ICC-ES AC106 - Acceptance Criteria for Predrilled Fasteners (Screw Anchors) in Masonry Elements

w. ICC-ES AC193 - Acceptance Criteria for Mechanical Anchors in Concrete Elements

x. ICC-ES AC308 - Acceptance Criteria for Post-Installed Adhesive Anchors in Concrete Elements

American Welding Society (AWS)

y. AWS D1.1 - Structural Welding Code - Steel

z. AWS D1.2 - Structural Welding Code - Aluminum

aa. AWS D 1.6 - Structural Welding Code – Stainless Steel

American Society of Mechanical Engineers (ASME)

bb. ASME B 18.2.1 - Square, Hex Bolts, Heavy Hex, and Askew Head Bolts and Hex, Heavy Hex, Hex Flange, Lobed Head and Lag Screws (Inch Series)

cc. ASME B 18.2.2 - Square and Hex Nuts (Inch Series)

dd. ASME B 18. 22.1 - Plain Washers

New York City Building Code (NYCBC)

NYC Buildings Bulletin 2009-019

American Institute of Steel Construction (AISC)

ee. Steel Construction Manual

ff. AISC 303 - Code of Standard Practice for Steel Buildings and Bridges

gg. AISC 360 - Specification for Structural Steel Buildings

hh. RSCS Specification for Structural Joints Using High-Strength Bolts

Aluminum Association

ii. Specifications for Aluminum Structures.

1.05 Description

A. Not Used

1.06 Quality Assurance

A. Fasteners not manufactured in the United States shall be tested and certification provided with respect to specified quality and strength standards. Certifications of origin shall be submitted for all U.S. fasteners supplied on the project. Fasteners to be tested shall be randomly selected by the Engineer in the field.

B. All welding shall be performed by welders certified in accordance with AWS. Certifications of field welders shall be submitted prior to performing any field welds as per Section 05 05 23.01 – Welding. Welding shall comply with, but not limited to the following:

AWS D1.1 for Steel

AWS D1.2 for Aluminum

AWS D1.6 for Stainless Steel.

Inadequate welds shall be corrected or redone and retested to the satisfaction of the Engineer, at no additional cost to the City.

C. Fasteners and concrete anchors will be inspected in accordance with the Inspection Article in the Execution part of this section.

D. Manufacturer’s load tables and certified performance tests for titanium bolts shall be provided.

1.07 Submittals

A. The Contractor shall submit Shop Drawings and material specifications for approval by the Engineer. Submittals shall include, but not be limited, to the following:

Shop Drawings providing the manufacturer, fastener type, certification of the fastener's material and capacity and product data such as:

a. Product information

b. Technical information

c. Manufacturer's Installation Instructions (MPII)

d. ICC-ES Evaluation Report.

Copy of valid AWS certification for each person who is to perform field welding.

Certified weld inspection reports, when required.

Adhesive Anchors

e. For all adhesive anchors, submit anchor sizes and location plan

f. Testing methods, procedures and equipment.

g. In the event that any adhesive anchors fail field testing, submit a detailed procedure for the removal and replacement of those anchors.

1.08 Delivery, Storage, and Handling

A. Materials stored outdoors shall be supported above ground surfaces and protected with approved effective and durable covers.

1.09 Spare Parts, Special Tools, and Supplies

A. Not Used

1.10 Special Warranty Provisions / Guarantee Periods

A. Not Used

PRODUCTS

1.11 Manufacturers

A. Expansion anchors shall be:

Power-Stud wedge expansion anchor as manufactured by Powers Fasteners, Inc., Brewster, NY;

Kwik Bolt 3 (KB3) expansion anchor as manufactured by Hilti, Plano, TX;

Strong-Bolt 2 Wedge Anchor as manufactured by Simpson Strong-Tie, Pleasanton, CA;

Or approved equal.

B. Screw anchors shall be:

Type 316 stainless steel KH-EZ screw anchor as manufactured by Hilti, Plano, TX;

Type 316 stainless steel Wedge-Bolt screw anchor as manufactured by Powers Fasteners Inc., Brewster, NY;

Type 316 stainless steel Titen-HD screw anchor as manufactured by Simpson Strong-Tie, Pleasanton, CA;

Or approved equal.

C. Sleeve or drop-in anchors shall be as manufactured by:

Hilti Inc., Plano, TX;

Powers Fasteners Inc., Brewster, NY;

Simpson Strong-Tie, Pleasanton, CA;

Or approved equal.

D. Adhesive Dowels and Anchors

Epoxy adhesive anchor system shall be:

a. PE1000+ as manufactured by Powers Fasteners Inc., Brewster, NY;

b. HIT-RE 500-V3 as manufactured by Hilti, Plano, TX;

c. Or approved equal.

Vinylester adhesive anchor system shall be:

d. AC100+ Gold as manufactured by Powers Inc., Brewster, NY;

e. HIT HY-200 as manufactured by Hilti, Plano, TX;

f. A7+ as manufactured by ITW Ramset/Redhead, Glendale Height, IL;

g. AT-XP as manufactured by Simpson Strong-Tie, Pleasnaton, CA;

h. Or approved equal.

E. The wedge inserts shall be as manufactured by:

a. Hohmann & Barnard, Inc., Hauppauge, NY;

b. Or approved equal.

F. Expansion Bolts in Structural Steel Connections shall be:

Type HB Hollo-Bolt as manufactured by Lindapter, Syracuse, NY;

Or approved equal.

1.12 Materials / Equipment

A. Anchor Bolts

Anchor bolts for equipment attachment shall be of stainless steel Type 316 with nitronic 60 stainless steel nuts and locknuts.

All other anchor bolts shall be Type 316 stainless steel with nitronic 60 stainless steel nuts.

Pipe sleeves around anchor bolts shall be of the size and configuration shown on the Contract Drawings.

Material for anchor bolts submerged in salt water or corrosive liquids for which stainless steel Type 316 is not suitable shall be as indicated in the Contract.

B. Stainless Steel Bolts

Stainless steel bolts shall conform to ASTM F593. All fasteners shall be Type 316 stainless steel. Unless otherwise specified, fasteners for aluminum members shall be Type 304 stainless steel. Fasteners for stainless steel members shall be of matching grade.

Stainless steel bolts shall have hexagonal heads with a raised letter or symbol on the bolts indicating the manufacturer, and be supplied with hexagonal nuts meeting the requirements of ASTM F594. Nuts shall be of the same alloy as the bolts and shall have a raised letter or symbol indicating the manufacturer.

Nuts for stainless steel bolts for elements which are indicated on the Contract Drawings to be removable shall be made of nitronic 60 alloy.

Material for bolts submerged in salt water or corrosive liquids for which stainless steel Type 316 is not suitable shall be as indicated in the Contract.

C. Post-Installed Anchors

Concrete anchors shall be one of the types listed below as indicated on the Contract Drawings. Unless otherwise noted, all concrete anchors which are submerged, or which are subject to vibration from equipment such as pumps and generators, shall be injected, adhesive anchors. The determination of anchors equivalent to those listed below shall be based on test data performed by a commercial testing laboratory.

a. Mechanical Anchors

1) Expansion anchors shall be wedge, sleeve, or drop-in mechanical anchors.

2) Screw anchors shall be one-piece threaded anchor with a finished hexagonal head.

b. Adhesive anchors shall be two part injection type.

c. Where anchor type is not indicated on the Contract Drawings, the wedge expansion anchor shall be used.

Expansion anchors shall be fully threaded, medium duty, Type 316 stainless steel anchors. Shall be sized and embedded to depths as shown on the Contract Drawings. If embedment depth is not given, the standard embedment depth as recommended by the manufacturer shall be used.

d. Manufacturer for Expansion anchor shall be as specified in this Section.

Screw anchors shall be a one piece, heavy duty anchor with a finished hexagonal head. Screw anchors shall be sized and embedded to depths as shown on the Contract Drawings. If embedment depth is not given, the standard embedment depth as recommended by the manufacturer shall be used.

e. Manufacturer for screw anchor shall be as specified in this Section.

Adhesive dowels shall consist of Grade 60 reinforcing steel ASTM A 615. Adhesive concrete anchors shall consist of Type 316 stainless steel ASTM F593 or Grade B7 high strength carbon ASTM A193 threaded rods or bolts anchored with a two-part injection type adhesive system into hardened concrete or grout-filled masonry. The adhesive system shall use a two-component adhesive mix and shall be injected with a static mixing nozzle following manufacturer's instructions. The anchor diameter, type, and embedment depth shall be as shown on the Contract Drawings.

f. The embedment depth of the rod/bolt shall provide a minimum allowable bond strength that is equal to the allowable tensile capacity of the rod/bolt (see Table 1) unless noted otherwise on the Contract Drawings.

g. Manufacturer for Epoxy adhesive and Vinylester adhesive anchor systems and shall be as specified in this Section.

h. Adhesive anchoring system shall have an ICC-ES Evaluation Service Report issued in accordance with AC308.

i. Adhesive for the anchors must qualify under ACI 355.4.

Table 1

Allowable Tensile Capacity (Kips) for Standard Manufacturer Embedment

Size	Concrete Anchors Wedge Type	CONCRETE ANCHORS WITH INJECTION ADHESIVE SYSTEM
3/8"	1.3	2.1
1/2"	2.4	3.8
5/8"	3.3	5.9
3/4"	4.8	8.4
7/8"	5.6	11.0
1"	7.1	15.0

Concrete anchors shall be of Stainless Steel Type 316 unless noted otherwise. Concrete anchors for stainless steel attachments shall be of matching grade.

All concrete anchors exposed to water and waste shall be Type 316 stainless steel and shall have nitronic 60 stainless steel nuts.

Material for concrete anchors submerged in salt water or other corrosive liquids for which stainless steel Type 316 is not suitable shall be as indicated in the Contract.

D. Concrete Inserts

Wedge Type Inserts:

a. The concrete inserts for attachment of shelf angles or brick relieving angles to the reinforced concrete beams or concrete encased steel beams, shall be wedge type inserts. The inserts shall have an askew head bolt to produce an automatic tightening action when a load is placed on the bolt.

b. The wedge inserts shall be of malleable iron, hot dipped galvanized. The askew bolt and the horseshoe shim plates shall be of stainless steel Type 304 or 316. The type of insert and size of bolts shall be as shown on the Contract Drawings.

c. Manufacturer for wedge inserts shall be as specified in this Section.

E. Eye Bolts

Eyebolts shall be of the size indicated on the Contract Drawings and shall conform to ASTM A489 unless noted otherwise.

Carbon steel eyebolts shall be galvanized

F. Expansion Bolts in Structural Steel Connections

Expansion bolts for connecting to hollow section steel or where access is restricted (blind-bolts) shall be Type 316 stainless steel with a hex head such as specified in this Section.

1.13 Fabrication / Assembling / Finishes

A. Not Used

1.14 Source Quality Control / Shop Tests

A. Not Used

EXECUTION

1.15 Examination / Preparation

A. The Contractor shall field verify all dimensions and condition of the materials to be connected, review the Drawings and report any discrepancies to the Engineer for clarification prior to starting fabrication.

1.16 Installation

A. Anchor Bolts, Adhesive Anchors and Concrete Anchors:

Anchor bolts shall be installed in accordance with AISC "Code of Standard Practice" by setting in concrete while it is being placed and positioned by means of a rigidly held template.

The installation of concrete anchors shall be done in strict conformance with the manufacturer's field demonstration and recommendations.

The holes drilled for adhesive anchors shall be cleaned by use of a fiber bristle brush and dry compressed air. The anchors shall be supported in the correct position until the adhesive sets and gains enough strength to prevent any dislocation. Adhesive anchors shall not be tightened or loaded until the adhesive has fully cured as recommended by the manufacturer.

No concrete anchor shall be installed before base concrete has attained specified 28-day strength.

Concrete anchors shall not be used in place of anchor bolts without Engineer's approval.

B. Bolts:

Unless otherwise specified, where aluminum and steel members are connected together they shall be fastened with Type 304 stainless steel bolts and isolated with micarta, nylon, rubber, or approved equal.

C. Concrete Inserts: Provide concrete inserts where shown on the Contract Drawings. Inserts shall be firmly held in position in the forms and sealed from intrusion of concrete mortar during concrete placement.

D. Adhesive Dowels and Adhesive Concrete Anchors

Concrete is to be a minimum of 21 days old at time of anchor installation

Work shall be performed by certified ACI/CRSI Adhesive Anchor Installers under continuous special inspection

Shall be installed in accordance with Manufacturer’s Published Installation Instructions (MPII), the applicable ICC-ES ESR and in accordance with NYC Buildings Bulletin 2009-019

Adhesive anchoring installation shall be subject to special inspection requirements of NYCBC section BC 1704.32.

Adhesive anchor shall be identified by labels on the packaging including manufacturer’s name, product designation and the requirements specified in ICC-ES AC308, Annex A.

E. Welding

Welding shall comply with the requirements of Section 05 05 23.01 - Welding.

1.17 Field Testing / Quality Control

A. Inspection

At least 25 percent of the concrete anchors to be installed shall be proof tested to 1.33 times the allowable load specified by the manufacturer of the system.

Welding inspection shall be done in accordance with the requirements of Section 05 05 23.01 - Welding.

Adhesive Anchors: Adhesive anchoring installation shall be subject to special inspection requirements of NYCBC section BC 1704.32.

B. Testing of Adhesive Dowels and Adhesive Concrete Anchors

Field testing:

a. Testing to be performed by a NYC Buildings Department approved special inspection agency to perform field testing of the installed anchors in accordance with NYCBC BC 1704.32 and ICC-ES ESR and the applicable sections of ASTM E488 in the presence of the Engineer.

b. Anchors that are to be tested are as indicated on the Contract Drawings.

Pull-out testing:

c. A total of 15% of the adhesive anchors designated for testing are to be tested and no more than one (1) bolt is to be tested per connection.

d. The Engineer will randomly choose the anchors to be tested.

e. Testing of the adhesive anchors shall not begin until all the anchors are installed.

f. If only one anchor fails, all the adhesive anchors will be accepted. If a second anchor fails, an additional 5% of the anchors shall be tested. If more than 20% of the total anchors tested fail, all the anchors shall be removed and replaced.

Removal and replacement of failed test anchors:

g. Remove all anchors that fail the field test without damage to the surrounding concrete.

h. Re-drill holes to remove adhesive bonding material residue and clean in accordance with Manufacturer's Published Installation Instructions (MPII).

i. Reinstall new anchors that are the same size as the removed anchors and install the new anchors in the same exact location as the removed anchor. Do not reuse the failed anchors, they shall be discarded.

j. Assign reinstalled anchors into batches only containing reinstalled anchors of the same diameter, embedment length and adhesive bonding material system, and field test in accordance with the above sections.

1.18 Startup / Demonstration

A. Not Used

1.19 Adjusting / Protection / Cleanup

A. Not Used

END OF SECTION

NO TEXT ON THIS PAGE

05 06 00.01 SCHEDULES FOR STAINLESS STEEL WORK

GENERAL

1.01 Summary

A. The Contractor shall furnish, install and erect the stainless steel work as specified herein and shown on the Contract Drawings.

B. Stainless steel work shall be furnished complete with all accessories, mountings and appurtenances of the type of stainless steel and finish as specified or required for a satisfactory installation.

1.02 Payment

A. There is no payment provision for this Section.

1.03 Related Sections

A. Requirements from the following sections also apply to this Section:

Section 05 05 23.01 - Welding.

1.04 References

A. Definition:

No definition of additional terms is required for this Section.

B. Reference Standards:

ASTM A193 - Alloy-Steel and Stainless Steel Bolting Materials for High-Temperature Service.

ASTM A194 - Carbon and Alloy Steel Nuts for Bolts for High-Pressure and High-Temperature Service.

ASTM A262 - Practice for Detecting Susceptibility to Intergranular Attack in Austenitic Stainless Steel.

ASTM A276 - Stainless and Heat-Resisting Steel Bars and Shapes.

ASTM A314 - Stainless and Heat-Resisting Steel Billets and Bars for Forging.

ASTM A380 - Practice for Cleaning and Descaling Stainless Steel Parts, Equipment and Systems.

ASTM A473 - Stainless and Heat-Resisting Steel Forgings.

ASTM A666 - Austenitic Stainless Steel, Sheet, Strip, Plate and Flat Bar.

ASTM F593 - Stainless Steel Bolts, Hex Cap Screws and Studs.

ASTM F594 - Stainless Steel Nuts.

ASME B1.1 - Unified Inch Screw Thread (UN and UNR Thread Form).

1.05 Description

A. Tests

All stainless steel materials including stainless test welds, shall be checked for compliance with tests for susceptibility to intergranular attack. Such tests shall be Practices A, B and E of ASTM A262. Detailed procedures for the tests shall be submitted to the Engineer for approval prior to start of work. Practice A shall be used only for acceptance of materials but not for rejection of materials, and shall be used for screening material intended for testing in Practice B and Practice E. The maximum acceptable corrosion rate under Practice B shall be 0.004 inch per month, rounded off to the third decimal place. If the certified mill report indicates that such test has been satisfactory performed, the fabricator may not be required to repeat the test. Material passing Practice E shall be acceptable.

Sample selection for the susceptibility to intergranular attack tests shall be as follows:

a. One (1) sample per each heat treatment lot for plates and forgings;

b. One (1) sample per each Welding Procedure Qualification regardless of the joint design;

c. If tests indicate a reduction in corrosion resistance, welding procedure shall be adjusted or heat treatment determined as needed to restore required corrosion resistance;

d. The samples so chosen shall have received all the post-weld heat treatments identical to the finished part.

B. Not Used

1.06 Quality Assurance

A. Shop inspections may be made by the City representatives. The Contractor shall give ample notice to the Engineer prior to the beginning of any stainless steel fabrication work so that inspection may be provided. The Contractor shall furnish all facilities for the inspection of materials and workmanship in the shop, and the inspectors shall be allowed free access to the necessary parts of the works.

B. Inspectors shall have the authority to reject any materials or work which does not meet the requirements specified herein or of the Contract Drawings.

C. Inspection at the shop is intended as a means of facilitating the work and avoiding errors, but is expressly understood that it will in no way relieve the Contractor from the responsibility for furnishing proper materials or workmanship.

1.07 Submittals

A. The Contractor shall prepare and submit Shop Drawings for all stainless steel fabrication for approval of the Engineer. Submittals shall include, but not be limited to, the following:

Certified test reports for susceptibility to intergranular attack.

Affidavit of compliance with type of stainless steel shown on the Contract Drawings or specified herein.

Certified weld inspection reports.

Cleaning and handling of stainless steel in accordance with Article “Cleaning and Handling” in this Section.

B. Samples of finish, on each type of stainless steel to be furnished, shall be submitted in accordance with the Quality Assurance requirements of the Contract.

1.08 Delivery, Storage, and Handling

A. Mechanical damage (e.g., scratches and gouges) to the stainless steel material can occur during handling. Care shall be taken in the material handling since such mechanical damage will result in the passive oxide film being "punctured" leading to a possible lower resistance to the initiation of corrosion than the surrounding chemically-passivated surface. Corrosion in such areas can be accelerated by the galvanic corrosion effect due to the unfavorable relative area ratios which would exist.

B. Stainless steel plates and sheets shall be stored vertically in racks and not be dragged out of the racks or over one another. Racks shall be protected to prevent iron contamination.

C. Heavy stainless steel plates shall be carefully separated and chocked with wooden blocks so that the forks of a fork-lift could be inserted between plates without mechanically damaging the surface.

D. Stainless steel plates and sheets laid out for use shall be off the floor and be divided by wooden planks to prevent surface damage and to facilitate subsequent handling.

E. Plate clamps, if used, shall be used with care as the serrated faces can dig in, indent and gouge the surface.

F. Stainless steel fabrications shall be loaded in such a manner that they may be transported and unloaded without being overstressed, deformed or otherwise damaged.

G. Stainless steel fabrications and packaged materials shall be protected from corrosion and deterioration and shall be stored in a dry area. Materials stored outdoors shall be supported above ground surfaces on wood runners and protected with approved effective and durable covers.

H. Stainless steel fabrications shall not be placed in or on a structure in a manner that might cause distortion or damage to the fabrication. The Contractor shall repair or replace damaged stainless steel fabrications or materials as directed by the Engineer.

1.09 Spare Parts, Special Tools, and Supplies

A. Not Used

1.10 Special Warranty Provisions / Guarantee Periods

A. Not Used

PRODUCTS

1.11 Manufacturers

A. Not Used

1.12 Materials / Equipment

A. Materials and Finishes

Type and finish of stainless steel to be utilized for fabrication shall be the type and finish indicated on the Contract Drawings or as specified herein for the intended service and conforming to the applicable ASTM standard.

The basic mill forms (sheet, strip, plate and bar) are classified by size as shown on Table 1. Tables 2, 3 and 4 identify finishes and conditions in which sheet, bar and plate are available.

Tables 2, 3 and 4 show numbered finishes and conditions for sheet, bar and plate. While there are no specific designations for polished finishes on bar or plate, the sheet finish designations are used to describe the desired effect. This also applies to finishes on ornamental tubing.

There are three standard finished for strip, which are broadly described by the finishing operations employed:

a. No. 1 Strip Finish is approximately the same as No. 2D Sheet Finish. It varies in appearance from dull gray matte to a fairly reflective surface, depending largely on alloy composition and amount of cold reduction.

b. No. 2 Strip Finish is approximately the same as a No. 2B sheet finish. It is smoother, more reflective than No. 1, and likewise varies with alloy composition.

c. Bright annealed finish is a highly reflective finish that is retained by final annealing in a controlled atmosphere furnace.

SECTION 05 06 00.01 - SCHEDULES FOR STAINLESS STEEL WORK

APPURTENANT WORKS – IG/PC

Table 1 - Classification of Stainless Steel Product Form

Item	Description	Dimensions		
		Thickness	Width	Diameter or Size
Sheet	Coils and cut length:			
	Mill finishes Nos. 1, 2D and 2B	under 3/16"	24" and over	--
	Polished finishes Nos. 3, 4, 6, 7 & 8	under 3/16"	all widths	--
Strip	Cold finished, coils or cut lengths	under 3/16"	under 24"	--
	Polished finishes Nos. 3, 4, 6,7 & 8	under 3/16"	all widths	--
Plate	Flat rolled or forged	3/16" and over	over 10"	--
Bar	Hot finished rounds, squares, octagons and hexagons	--	--	1/4" and over
	Hot finished flats	1/8" to 8" incl.	1/4" to 10" incl.	--
	Cold finished rounds, squares, octagons and hexagons	--	--	over 1/8"
	Cold finished flats	1/8" to 4-1/2"	3/8" to 4-1/2"	--
Wire	Cold finishes only: (in coil)			
	Round, square, octagon, hexagon and flat wire	under 3/16"	under 3/8"	--
Pipe & Tubing	Several different classifications, with differing specifications, are available.			
Extrusion	Not considered “standard” shapes. Currently limited in size to approximately 6-1/2" diameter or structurals.			

Table 2 - Standard Mechanical Sheet Finishes

Unpolished or Rolled Finishes: No. 1 A rough dull surface which results from hot rolling to the specified thickness followed by annealing and descaling.	No. 4 A polished surface obtained by finishing with a 120-150 mesh abrasive, following initial grinding with coarser abrasives. This is a general purpose bright finish with a visible "grain" which prevents mirror reflection.
No. 2D A dull finish which results from cold rolling followed by annealing and descaling, and may perhaps get a final light roll pass through unpolished rolls. A 2D finish is used where appearance is of no concern.	No. 6 A dull satin finish having lower reflectivity than No. 4 finish. It is produced by Tampico brushing the No. 4 finish in a medium of abrasive and oil. It is used for architectural applications and ornamentation where a high luster is undesirable, and to contrast with brighter finishes.
No. 2B A bright cold-rolled finish resulting in the same manner as No. 2D finish, except that the annealed and descaled sheet receives a final light roll pass through polished rolls. This is the general purpose cold-rolled finish that can be used as is, or as a preliminary step to polishing.	No. 7 A high reflective finish that is obtained by buffing finely ground surfaces but not to the extent of completely removing the "grit" lines. It is used chiefly for architectural and ornamental purposes.
Polished Finishes: No. 3 An intermediate polish surface obtained by finishing with a 100 grit abrasive. Generally used where a semi-finished polished surface is required. A No. 3 finish usually receives additional polishing during fabrication.	No. 8 The most reflective surface, which is obtained by polishing with successively finer abrasives and buffing extensively until all grit lines from preliminary grinding operations are removed. It is used for applications such as mirrors and reflectors.

Table 3 - Conditions and Finishes for Bar

Conditions	Surface Finishes[1]
Hot worked only	(a) Scale not removed (excluding spot conditioning)

	(b)	Rough turned[2]
	(c)	Pickled or blast cleaned and pickled.
Annealed or otherwise heat treated.	(a)	Scale not removed (excluding spot conditioning)
	(b)	Rough turned
	(c)	Pickled or blast cleaned and pickled
	(d)	Cold drawn or cold rolled
	(e)	Centerless ground
	(f)	Polished
Annealed and cold worked to high tensile strength[3]	(d)	Cold drawn or cold rolled
	(e)	Centerless ground
	(f)	Polished

Table 4 - Conditions and Finishes for Plate

Condition and Finish	Description and Remaks
Hot rolled	Scale not removed. Not heat treated. Plates not recommended for final use in this condition.[4]
Hot rolled, annealed or heat treated	Scale not removed. Use of plates in this condition is generally confined to heat resisting applications. Scale impairs corrosion resistance.[1]
Hot rolled, annealed or heat treated, blast cleaned or pickled	Condition and finish commonly preferred for corrosion resisting and most heat resisting applications.
Hot rolled, annealed, descaled and temper passed	Smoother finish for specialized applications.
Hot rolled, annealed, descaled cold rolled, annealed, descaled, optionally temper passed	Smooth finish with greater freedom from surface imperfection than the above.
Hot rolled, annealed or heat treated, surface cleaned and polished	Polished finishes refer to Table 2.

1.13

Notes for Tables 3 & 4: 1. Surface finishes (b), (e) and (f) are applicable to round bars only.
2. Bars of the 4xx series stainless steels which are highly hardenable, such as Types 414, 420, 420F, 431, 440A, 440B and 440C, are annealed before rough turning. Other hardenable grades, such as Types 403, 410, 416 and 416Se, may also require annealing depending on their composition and size.
3. Produced in Types 302, 303Se, 304 and 316.
4. Surface inspection is not practicable on plates which have not been pickled or otherwise descaled.

1.01 Fasteners

A. Fasteners

Stainless steel fasteners shall be used for joining stainless steel work.

Stainless steel fasteners shall be made of alloys that are equal to or more corrosion resistant than the materials they join.

1.02 Fabrication / Assembling / Finishes

A. Fabrication

Holes for bolts and screws shall be drilled. Fastenings shall be concealed where practicable. Joints exposed to the weather shall be formed to exclude water.

As far as practicable, all fabricated units shall be fitted and assembled in the shop, with all cuts and bends made to precision measurements in accordance with details shown on approved shop drawings.

Work shall be fabricated so that it is installed in a manner that will provide for expansion and contraction, prevent the shearing of bolts, screws and other fastenings, ensure rigidity, and provide close fitting of sections.

All finished and/or machined faces shall be true to line and level. Stainless steel sections shall be well formed to shape and size with sharp lines and angles; curved work shall be sprung evenly to curves.

All work shall be fitted together at the shop as far as possible, and delivered complete and ready for erection. Proper care shall be exercised in handling all work so as not to injure the finished surfaces.

1.03 Source Quality Control / Shop Tests

A. Not Used

EXECUTION

1.04 Examination / Preparation

A. Field Measurements

The Contractor shall verify all dimensions and shall make any field measurements necessary and shall be fully responsible for accuracy and layout of the work.

The Contractor shall review the Contract Drawings and any discrepancies shall be reported to the Engineer for clarification prior to starting fabrication.

1.05 Implementation

A. Installation

All stainless steel fabrications shall be erected square, plumb and true, accurately fitted, adequately anchored in place, set at proper elevations and positions.

All inserts, anchor bolts and all other miscellaneous work specified herein or shown on the Contract Drawings or required for the proper completion of the work, which are embedded in concrete, shall be properly set and securely held in position in the forms before the concrete is placed.

All stainless steel fabrications shall be installed in conformance with details shown on the Contract Drawings or on the approved shop drawings.

B. Welding

Welding shall be done in a manner that will prevent buckling and in accordance with Section 05 05 23.01 - Welding, and as modified hereinafter. Field welding of stainless steel is not permitted.

All welds exposed in the work shall be ground smooth and finished to match the finish of the adjacent stainless steel surfaces.

Select weld rods that provide weld filler metal having corrosion resistant properties as nearly identical or better than the base metal to insure preservation of the corrosion-resistant properties. Provide heat treatment at welds where testing of weld procedure indicates it is required to restore the corrosion resistance.

Thermal conductivity of stainless steel is about half that of other steels; and the following methods may be used to accommodate this situation:

a. Use lower weld current setting.

b. Use skip-weld techniques to minimize heat concentration.

c. Use back-up chill bars or other cooling techniques to dissipate heat.

Edges of the stainless steel to be welded shall be cleaned of contaminants.

C. Cleaning and Handling

All stainless steel surfaces shall be precleaned, descaled, passivated and inspected before, during and after fabrication in accordance with the applicable sections of ASTM A380 and as detailed in the procedures to be submitted to the Engineer for approval prior to start of work. Degreasing and passivation of stainless steel articles shall be conducted as the last step after fabrication.

Measures to protect cleaned surfaces shall be taken as soon as final cleaning is completed and shall be maintained during all subsequent handling, storage and shipping.

a. The Contractor shall submit for approval specific procedures listing all the steps to be followed in detecting contamination and in descaling, cleaning, passivation and protecting of all stainless steel.

b. Area showing clear indications of contamination shall be recleaned, repassivated and reinspected.

At approved stages in the shop operations, contaminants such as scale, embedded iron, rust, dirt, oil, grease and any other foreign matter shall be removed from the metal, as directed or approved by the Engineer. The adequacy of these operations shall be checked by the Engineer. Operations in the shop shall be conducted so as to avoid contamination of the stainless steel and to keep the metal surfaces free from dirt and foreign matter.

In order to prevent incipient corrosion during fabrication, special efforts shall be made at all times to keep all stainless steel surfaces from coming in contact with other metals.

c. Stainless steel and stainless steel welds shall be cleaned with clean sand, stainless steel wool, stainless steel brushes, or other approved means and shall be protected at all times from contamination by any materials, including carbon steel, that shall impair its resistance to corrosion.

d. Approved methods of cutting grinding and handling shall be used to prevent contamination. If air-arc, or carbon-arc cutting is used, additional metal shall be removed by approved mechanical means so as to provide clean, weldable edges. All grinding of stainless steel shall be performed with aluminum oxide or silicon carbide grinding wheels bonded with resin or rubber. Grinding wheels used on carbon steel shall not be used on stainless steel.

e. Sand, grinding wheels, brushes and other materials used for cleaning stainless steel shall be checked periodically by the Engineer for contaminants. Cleaning aids found to contain contaminants shall not be used on the work.

D. Not Used

1.06 Field Testing / Quality Control

A. Not Used

1.07 Startup / Demonstration

A. Not Used

1.08 Adjusting / Protection / Cleanup

A. Not Used

END OF SECTION

SECTION 05 50 00 – METAL FABRICATIONS

APPURTENANT WORKS – IG/PC

05 50 00 METAL FABRICATIONS

GENERAL

1.01 Summary

A. The Contractor shall furnish, fabricate and install all metal fabrications not specifically included in other Sections and required for the completion of the work as shown on the Contract Drawings and as specified herein.

B. Metal fabrications shall be provided complete with all accessories, base attachments, fastenings and other appurtenances as specified and as may be required for a satisfactory installation.

C. Unless otherwise shown, specified or required, design, workmanship and erection shall conform to or exceed the applicable requirements of the documents listed hereinafter in Article 1.04 to the extent that the provisions of such documents are not in conflict with the requirements of this Section.

1.02 Payment

A. There is no payment provision for this Section.

1.03 Related Sections

A. Requirements from the following sections also apply to this Section:

Section 05 05 23.01 - Welding

Section 05 05 23.02 - Miscellaneous Metal Fastenings

Section 05 06 00.01 - Schedules for Stainless Steel Work

Section 05 52 13.05 - Welded Pipe Railings (Stainless Steel)

Section 05 53 01.02 - Stainless Steel Floor Gratings

1.04 References

A. Definition:

No definition of additional terms is required for this Section.

B. Reference Standards:

ASTM A36 - Structural Steel.

ASTM A48 - Gray Iron Castings.

ASTM A276 - Stainless and Heat-Resisting Steel Bars and Shapes.

ASTM A480 - General Requirements for Flat-Rolled Stainless and Heat-Resisting Steel Plates, Sheet and Strips.

ASTM A666 - Austenitic Stainless Steel, Sheet, Strip Plate and Flat Bar.

ASTM B209 - Aluminum and Aluminum-Alloy Sheet and Plate.

ASTM B221 - Aluminum-Alloy Extruded Bars, Rods, Wire, Shapes and Tubes.

ASTM B308 - Aluminum-Alloy 6061-T6 Standard Structural Profiles.

ANSI/AWS D1.1 - Structural Welding Code.

ANSI/AWS D1.2 - Structural Welding Code - Aluminum.

New York City Building Code (NYBC).

American Institute of Steel Construction (AISC).

AISC Manual of Steel Construction.

AISC Specification for Design and Fabrication of Structural Steel for Buildings Including the Commentary.

Aluminum Association Specifications for Aluminum Constructions.

Aluminum Company of America, "Welding and Brazing Aluminum".

Occupational Safety and Health Administration (OSHA), U.S. Department of Labor.

1.05 Description

A. Not Used

1.06 Quality Assurance

A. Shop inspections may be made by the City's representatives. The Contractor shall give ample notice to the Engineer prior to the beginning of any fabrication work so that inspection may be provided. The Contractor shall furnish all facilities for the inspection of materials and workmanship in the shop, and the inspectors shall be allowed free access to the necessary parts of the works.

B. Inspectors shall have the authority to reject any materials or work which does not meet the requirements of these Specifications.

C. Inspection at the shop is intended as a means of facilitating the work and avoiding errors, but is expressly understood that it will in no way relieve the Contractor from his responsibility for furnishing proper materials or workmanship under this Section. Design of Members and Connections

All details shown are typical; similar details shall apply to similar conditions, unless otherwise shown or specified. Dimensions shall be verified at the site without causing delay in the work.

Each fabricator shall be responsible for the structural design of miscellaneous metal work within the requirements established by these Specifications.

D. Complete design calculation and Shop Drawings shall be prepared, signed and stamped with the seal of a Licensed Professional Engineer, licensed to practice in the State of New York and recognized as an expert in the required work unless the design and details have been shown on the Contract Drawings.

E. "Pencil-line" thin butt joints shall be provided.

F. Shop Assembly: Items in the shop shall be preassembled to the greatest extent possible, so as to minimize field splicing and assembly of units at the site. Units shall be disassembled only to the extent necessary for shipping and handling limitations. Units shall be clearly marked for reassembly and coordinated installation.

1.07 Submittals

A. The Contractor shall submit Shop Drawings and other materials for the approval of the Engineer. Shop drawings shall include, but not be limited to, the following:

Layout drawings shall indicate all structural shapes, sizes and dimensions.

Certifications, schedules, design calculations, detailed drawings, plans, elevations, and details of sections and connections

Detail drawings shall indicate jointing and anchoring details.

Anchor bolts and setting plans

Erection drawings

B. No fabrication shall be started until Shop Drawings have been approved by the Engineer.

C. The following shall also be submitted:

Manufacturer's specifications, load table, installation instructions, setting drawings and templates for location and installation of miscellaneous metal items, appurtenances and anchorage devices.

Certified weld inspection reports.

D. The following samples shall be furnished: Representative samples of bolts, anchors and inserts as requested by the Engineer. The Engineer's review shall be for type and finish only. Compliance with all other requirements shall be the exclusive responsibility of the Contractor.

E. Record Drawings: During progress of the work, an up to date set of drawings showing Field and Shop Drawing modifications shall be kept. Immediately upon completion of work, Record Drawings showing the actual in-place installation of all work constructed and/or installed under this Section shall be provided. Drawings shall include all necessary plans, sections and details, with all reference dimensions and elevations required for complete Record Drawings of the work.

1.08 Delivery, Storage, and Handling

A. Metal fabrications shall be handled in such a manner that they may be transported and unloaded without being over-stressed, deformed or otherwise damaged.

B. Metal fabrications and packaged materials shall be protected from corrosion and deterioration and shall be stored in a dry area. Materials stored outdoors shall be supported above ground surfaces on wood runners and protected with effective and durable covers approved by the Engineer.

C. Metal fabrications shall not be placed in or on a structure in a manner that might cause distortion or damage to the fabrication. The Contractor shall repair or replace damaged metal fabrications or materials as directed by the Engineer.

D. Materials shall be delivered to the site at such intervals to insure uninterrupted progress of the work. Anchor bolts and anchorage devices, which are to be embedded in cast-in-place concrete or masonry shall be delivered, in ample time not to delay that work.

1.09 Spare Parts, Special Tools, and Supplies

A. Not Used

1.10 Special Warranty Provisions / Guarantee Periods

A. Not Used

PRODUCTS

1.11 Manufacturers

A. Floor access hatch shall be as manufactured by:

USF Fabrication, Inc., Hialeah, FL;

Acudor Products, Inc., Fairfield, NJ;

Presey Corporation, Wassaic, NY

Or approved equal.

1.12 Materials / Equipment

A. Materials

Stainless steel shapes and plate shall be Type 316 stainless steel for bolted constructions and 316L for welded construction as detailed on the Contract Drawings and conforming to the applicable requirements of Section 05 06 00.01 - Schedules for Stainless Steel Work. Shapes shall conform to ASTM A276. Stainless steel plates shall conform to ASTM A480 and ASTM A666.

Bolting hardware shall be as specified in Section 05 05 23.02 - Miscellaneous Metal Fastenings.

Concrete anchors shall be as specified in Section 05 05 23.02 - Miscellaneous Metal Fastenings.

Frames and covers shall be of cast iron, unless otherwise shown on the contract plans, complying with the requirements of **Section 22.01** of the NYC DEP BWSO Standard Sewer and Water Main Specifications, Type 1. Malleable iron or cast steel covers, when required, shall comply with the requirements of **Section 22.01 and Section 22.04** of the NYC DEP BWSO Standard Sewer and Water Main Specifications

Steps shall be cast iron and shall comply with the requirements of Section 22.01, Type 1, or shall be copolymer polypropylene plastic manhole steps with one-half (1/2) inch Grade 60 steel reinforcement and shall comply with the Sewer Design Standards.

B. Access Stairs, Ship Ladders and Platforms

Platforms, associated access stairs and ship ladders shall have stainless steel structural members, stainless stair treads, and stainless platform gratings as specified herein unless shown otherwise on the Contract Drawings.

Structural stainless steel sections shall conform to ASTM A276 and all work shall conform to the AISC Manual of Steel Construction.

Stainless steel platform and stair tread gratings pattern shall be as specified in Section 05 53 01.02 – Stainless Steel Floor Gratings. Stair treads shall be designed to support a uniform live load of 175 pounds per square foot with a maximum deflection of 1/240 of the span.

Stainless steel platform grating shall be designed for the loads as specified herein or as shown on the Contract Drawings.

Stainless steel handrails shall be as specified under Section 05 52 13.05 - Welded Pipe Railings (Stainless Steel) and shall be coordinated with stair, ship ladder and platform fabrication. Handrail attachment to stairs, ship ladders and platform shall be in accordance with the details shown on the Contract Drawings.

C. Floor Access Hatches

Floor access hatches shall be double leaf, Type JD hatches except for openings less than 4 feet long which shall have single leaf hatches Type J. Manufacturer for floor access hatch shall be as specified in this Section.

Hatch size shall be as shown on the Contract Drawings. Hatch leaf shall be water-tight made of stainless steel diamond-pattern plate designed to withstand a live load as indicated on the Contract Drawings for the adjacent floor or deck area. Channel or tee type frame shall be of stainless steel with an anchor flange around the perimeter. All access hatches as indicated on the drawings shall be provided with recessed handles and shall be provided with automatic hold-open arm with a release handle.

All hardware shall be of stainless steel and shall include heavy forged hinges, spring operators, an automatic hold-open arm with release handle, and a snap lock with removable handle. The location of hinges, hold-open arm with release handle shall be as shown on the Contract Drawings and/or approved by the Engineer

Double leaf doors shall be provided with safety bars to go across the open sides of the door, when in the open position. Brackets shall be provided on the underside of the doors to hold the safety bars when not in use.

Access hatches supporting floor loads shall be detailed and fabricated based on calculations indicating that they comply with New York City Building Code for the loading designated on the Contract Drawings for the adjacent floor area. If no loading is designated, a minimum design load of 300 pounds per square foot shall be used or as required for the intended use.

If the access doors are located in areas subject to vehicular traffic, they shall be designed for HS-20 loading.

D. Manholes

Manholes shall be constructed of the sizes and dimensions, and of the types, and at the locations and to the elevations shown on the plans or as directed by the Engineer, and as shown on the Sewer Design Standards.

The Contractor shall furnish and install in the manholes, steps and ladders of the size, shape and spacing shown on the plans and on the Sewer Design Standards. Steps and ladders or other step or ladder hardware shall be placed integrally with the concrete or shall be installed by drilling a core hole and either installing a thermoplastic insert or expansion anchor to except hardware, or setting hardware into nonshrink fresh grout or an approved nonshrink compound.

The brick masonry or concrete for the manholes shall be built to within such distance of the final grade as shown, specified or ordered. Frames and covers shall be as shown on the Sewer Design Standards. The frames shall be set on the masonry or concrete in a full bed of stiff fresh cement mortar.

E. Stainless Steel Lintels and Shelf Angles

Lintels and shelf angles shall be bent or rolled angles, fabricated of stainless steel Type 316. All angles shall conform to the sizes, shapes, dimensions and details as noted on the Contract Drawings. The lintels assembled by welding shall be fabricated of stainless steel Type 316L.

All mounting and assembly hardware shall be Type 316 stainless steel.

F. Anchor Bolts

Anchor bolts shall be as specified in Section 05 05 23.02 - Miscellaneous Metal Fastenings.

G. Vertical Ladders

Aluminum ladders shall be fabricated from aluminum 6061-T6 as detailed on the Contract Drawings.

Stainless steel ladders shall be fabricated from Type 316L stainless steel as detailed on the Contract Drawings.

Wall mounted ladders shall have welded brackets attached to the wall with concrete or masonry anchors.

Ladders shall comply with OSHA 1910.27.

Safety cages or fall prevention system shall be required on all ladders exceeding twenty feet height between landings.

The third rail required for the fall prevention system shall be of the same material as the ladder.

H. Fall Prevention System

All ladders shall be provided with a fall prevention system.

The fall prevention system shall be the RTC 2000 Climb-Rite System as manufactured by:

a. The RTC 2000 Climb-Rite System as manufactured by Research and Trading Corporation.

b. Saf-T-Climb as manufactured by the Norton Company/Air Space Devices, Inc., Cerritos, California.

c. Or approved equal.

All necessary components shall be furnished, including two safety belts for each fall prevention installation to provide a complete and fully operational fall prevention system. Safety belts shall fit a waist range from 23 inches to 54 inches.

I. Rung Ladder

All metal ladder rungs must have a minimum diameter of three-fourths inch. The distance between rungs, cleats, and steps of fixed ladders cannot to exceed 12 inches and have to be uniform throughout the length of the ladder. The minimum clear length of rungs or cleats shall be 16 inches

1.13 Fabrication / Assembling / Finishes

A. Fabrication of steel and stainless steel shall be in accordance with the Specification for the Design Fabrication and Erection of Structural Steel for Building of the AISC. Fabrication of aluminum shall be in accordance with the Aluminum Association Specifications for Aluminum Structures.

B. Holes for bolts and screws shall be drilled. Fastenings shall be concealed where practicable. Joints exposed to the weather shall be formed to exclude water.

C. As far as practicable, all fabricated units shall be fitted and assembled in the shop, with all cuts and bends made to precision measurements in accordance with details shown on approved shop drawings.

D. Work shall be fabricated so that it is installed in a manner that will provide for expansion and contraction, prevent the shearing of bolts, screws and other fastenings, ensure rigidity, and provide close fitting of sections.

E. Welding of carbon and low alloy steel shall conform to the applicable requirements of ANSI/AWS D1.1, and Section 05 05 23.01 - Welding. Welding of aluminum shall conform to the applicable recommendations of the Aluminum Company of America publication, "Welding and Brazing Aluminum"; ANSI/AWS D1.2 and Aluminum Association Specification for Aluminum Constructions. Welding shall be done in a manner that will prevent permanent buckling and all welds exposed in the finished work shall be ground smooth.

F. All finished and/or machined faces shall be true to line and level. Steel and aluminum shall be standard, and well finished. Sections shall be well formed to shape and size with sharp lines and angles; curved work shall be sprung evenly to curves.

G. All work shall be fitted together at the shop as far as possible, and delivered complete and ready for erection. Proper care shall be exercised in handling all work so as not to damage the finished surfaces

1.14 Source Quality Control / Shop Tests

A. Not Used

EXECUTION

1.15 Examination / Preparation

A. Field Measurements

The Contractor shall verify all dimensions and shall make any field measurements necessary and shall be fully responsible for accuracy and layout of the work.

The Contractor shall review the Contract Drawings and any discrepancies shall be reported to the Engineer for clarification prior to starting fabrication.

B. Inspection

The Contractor shall examine the alignment of the substrate and conditions under which metal fabrications work is to be performed and notify the Engineer in writing of unsatisfactory conditions.

Do not proceed with the metal fabrication and installation work until unsatisfactory conditions have been corrected in a manner acceptable to the Engineer.

C. Not Used

1.16 Implementation

A. Installation

All metal fabrications shall be erected square, plumb and true, accurately fitted, adequately anchored in place, set at proper elevations and positions.

All inserts, anchor bolts and all other miscellaneous metal work specified herein or shown on the Contract Drawings or required for the proper completion of the work, which are embedded in concrete, shall be properly set and securely held in position in the forms before the concrete is placed.

All miscellaneous metal fabrications shall be installed in conformance with details shown on the Contract Drawings or on the approved shop drawings.

1.17 Field Testing / Quality Control

A. Not Used

1.18 Startup / Demonstration

A. Not Used

1.19 Adjusting / Protection / Cleanup

A. Not Used

END OF SECTION

NO TEXT ON THIS PAGE

05 52 13.05 WELDED PIPE RAILINGS (STAINLESS STEEL)

GENERAL

1.01 Summary

A. This Section describes the requirements for stainless steel welded pipe railing. Stainless steel welded pipe railing and auxiliary system components shall be provided as specified herein and in the Contract; and as shown on the Contract Drawings. Contractor shall provide all labor, materials, tools, equipment and incidentals as shown, specified and required to furnish and install all stainless steel welded pipe railing.

B. Unless otherwise shown or specified, stainless steel welded pipe railing shall consist of a system of two rails welded to posts spaced not more than 5 feet 0 inches on center and a system of handrails supported from adjacent construction by mounting brackets spaced at not more than 5 feet 0 inches on center.

1.02 Payment

A. There is no payment provision for this Section.

1.03 Related Sections

A. Requirements from the following sections also apply to this Section:

Section 05 05 23.02 - Miscellaneous Metal Fastenings

Section 05 06 00.01 - Schedules for Stainless Steel Work

1.04 References

A. Reference Standards:

NYCBC - New York City Building Code

ASTM A 276- Stainless Steel Bars and Shapes, Standard Specification for

ASTM A 554- Welded Stainless Steel Mechanical Tubing, Standard Specification for

ASTM A 666- Annealed or Cold-Worked Austenitic Stainless Steel Sheet, Strip, Plate and Flat Bar, Standard Specification for

ASTM C 1107- Packaged Dry, Hydraulic-Cement Grout (Non-shrink), Standard Specification for

ASTM E 329 - Agencies Engaged in the Testing and/or Inspection of Materials Used in Construction, Standard Specification for

ASTM E 488 - Strength of Anchors in Concrete and Masonry Elements, Standard Test Method for

ASTM E 548 - General Criteria Used for Evaluating Laboratory Competence, Standard Guide for

ASTM E 894 - Anchorage of Permanent Metal Railing Systems and Rails for Buildings, Standard Test Method for

ASTM E 935 - Performance of Permanent Metal Railing Systems and Rails for Buildings, Standard Test Methods for

ASTM E 985 - Permanent Metal Railing Systems and Rails for Buildings, Standard Specification for

ASTM F 593 - Stainless Steel Bolts, Hex Cap Screws and Studs, Standard Specification for

ASTM F 594 - Stainless Steel Nuts, Standard Specification for

ANSI/AWS - Structural Welding Code D1.1

AWS A 5.12 - Tungsten and Tungsten Alloy Electrodes for Arc Welding and Cutting

AWS - Standard Codes for Arc and Gas Welding in Building Construction

ANSI A 1264.1- Safety Requirements for Workplace Floor and Wall Openings, Stairs and Railing Systems

AMP 521-01 (R2012)-Architectural Metal Products Division of The National Association of Architectural Metal Manufacturers. Pipe Railing Systems Manual

ASTM A 312- Seamless and Welded Austenitic Stainless Steel Pipes, Standard Specification for

29 CFR 1910.23 - Guarding Floor and Wall Openings And Holes

1.05 Description

A. Not Used

1.06 Quality Assurance

A. Manufacturer Qualifications:

Engage a single fabricator, with undivided responsibility for detailing and performance of the stainless steel welded railing systems.

Engage a firm which can show minimum of five (5) years previous successful experience in detailing and fabrication of stainless steel welded pipe railing systems of scope and type similar to the required work.

Materials and fabrication procedures shall be subject to inspection and tests in the mill, shop, and field, conducted by a qualified inspection agency in compliance with ASTM E329 and ASTM E548. Such inspections and tests shall not relieve the Contractor of responsibility for providing materials and fabrication procedures in compliance with specified requirements.

B. Installer Qualifications:

Engage a single installer skilled, trained and with successful and documented experience in the installation of stainless steel welded pipe railing systems and with specific skill and successful experience in the erection of the types of materials required; and who agrees to employ only tradesmen with specific skill and successful experience in this type of work. Submit names and qualification to the Engineer along with the following information on a minimum of three (3) successful projects in the last five (5) years:

a. Names and telephone numbers of owner, architects or engineers responsible for projects.

b. Approximate contract cost of the stainless steel welded pipe railing.

c. Amount of area installed.

C. Professional Engineer:

Engage a registered professional engineer legally qualified to practice in the State of New York and experienced in providing engineering services of the kind indicated.

Responsibilities include, but are not necessarily limited to, the following:

a. Carefully reviewing system performance and design criteria stated in the Contract Documents.

b. Preparing written requests for clarification or interpretation of performance or design criteria for submittal to Engineer by Contractor.

c. Preparing, or supervising the preparation of design calculations, and reviewing and approving related Shop Drawings prepared by the welded pipe railing system manufacturer prior to submission to Engineer; testing plan development, and test-result interpretations; and providing comprehensive engineering analyses verifying compliance of the system with the requirements of the Contract Documents.

d. Signing and sealing all calculations and engineering analyses.

e. Certifying that:

1) The professional engineer has performed the design of the welded pipe railing system in accordance with the performance and design criteria stated in the Contract Documents, and

2) The said design conforms to all applicable local, state and federal codes, rules and regulations and to the prevailing standards of practice.

D. Testing Agency Qualifications: To qualify for approval, an independent testing agency shall demonstrate to Engineer's satisfaction, based on evaluation of criteria submitted by testing agency, that it has the experience and capability to satisfactorily conduct the testing indicated without delaying the work in accordance with ASTM E329 and ASTM E548.

E. Performance Criteria:

Maintain the visual design concept shown, and the technical requirements specified, including modules, profiles, alignment of components and requirements for finish.

Contractor shall provide stainless steel welded pipe handrail and railing system that conforms to the City of New York Building Code, ASTM E985 and CFR 29, Part 1910.23, including the 200 pound loading requirement, and including the requirement that specific types of occupancies and sizes of contributing protected areas shall incorporate greater design load resistance into welded pipe railing system, in compliance with ASTM E985, than that specified herein.

a. Completed handrail and railing shall withstand a uniform lateral force of 50 pounds per linear foot and a vertical uniform downward force of 50

pounds per linear foot, both applied simultaneously at the top of the handrail and railing, performance tested in accordance with Test Method A and B of ASTM E935.

b. Intermediate and bottom rails shall withstand simultaneously applied lateral uniform forces of 40 pounds per linear foot and a vertical load of 50 pounds per linear foot, however, lateral and vertical loads on intermediate and bottom railings need not be considered in the detailing and fabrication of posts and anchorages.

c. For railings having solid panels or picket balusters, the panels or picket balusters shall be detailed and fabricated to withstand a uniform lateral load of 50 pounds distributed over any round or square area of one square foot located anywhere within the infill area or a 50 pound per foot penetration cone, performance tested in accordance with Test Method C and D of ASTM E 935.

d. Concentrated 200 pound load and uniform force conditions shall not be applied simultaneously.

e. Other pertinent requirements ceded to ANSI A1264.1 by governing authorities having jurisdiction at the Site.

f. Bending stresses shall not exceed 75 percent of the yield stress of the material. Applied loads shall not produce permanent residual deformation in the completed work when loads are removed. Load-deformation data shall be determined in accordance with ASTM E935.

g. Maximum allowable deflections shall be in accordance with ASTM E985.

h. Where no computations provide the needed information, testing, in compliance with ASTM E935, shall be performed for verification that stainless steel welded pipe railing system and auxiliary system components comply with specified performance requirements and the requirements of governing authorities having jurisdiction.

Thermal Control: Provide adequate expansion within the fabricated system that allows for a thermal expansion and contraction caused by a material temperature range of 140 degrees F to -20 degrees F without warp or bow of system components. Distance between expansion joints shall be based on providing a 1/4 inch wide joint at 70 degrees F which accommodates a movement of 150 percent of the calculated amount of movement for the specified temperature range.

Provide expansion joints in handrail and railing system Work where systems cross expansion joints in structure.

Configuration of all stainless steel welded pipe handrail and railing systems shall be as shown on the Contract Drawings. All details shown on the Contract Drawings are typical; similar details apply to similar conditions, unless specifically noted otherwise on the Contract Drawings. Verify dimensions at the site without causing delay in the work.

Manufacturer is responsible for structural analysis and detailing of stainless steel welded pipe handrail and railing system. Provide complete structural performance calculations and Shop Drawings for all stainless steel welded pipe handrail and railing members, anchors and all other support system components prepared, signed and stamped with the seal of a registered professional engineer licensed to practice in the State of New York and recognized as an expert in the specialty involved.

F. Anchors and Supports:

Anchorage system shall be structurally analyzed based on results of tests in compliance with ASTM E488 and ASTM E894. Anchors shall be tested for static, seismic, fatigue and shock loadings in series. Static tests shall include tension, shear, flexure, and torsion load resistance.

When the size, length or load carrying capacity of an anchor bolt, concrete anchor or concrete insert is not shown on the Contract Drawings, provide the size, length and capacity required to carry the design load times a minimum safety factor of four when installed in cast-in-place concrete and a minimum safety factor of six when installed in unit masonry construction.

Sizes shown on the Contract Drawings shall be considered minimum. Increase size to comply with design loadings and minimum safety factors specified.

1.07 Submittals

A. The Contractor shall submit Shop Drawings for approval of the Engineer. Submittals shall include, but not be limited, to the following:

B. Samples:

Full size sample, 2 foot - 0 inches long, of assembled stainless steel welded pipe railing system at post and rail intersections with all associated components including typical welded connections, mounted toe-board and sleeve, and handrail complete with mounting brackets all with specified controlled uniform finish.

Samples will be reviewed by Engineer for color, finish, joinery appearance and workmanship only. Compliance with all other requirements is the responsibility of Contractor.

C. Shop Drawings:

Drawings for the fabrication and erection of stainless steel welded pipe railing and handrail systems with sizes of members, components and anchorage devices, all based on specified requirements. Indicate that Shop Drawings have been reviewed by the professional engineer preparing, signing and stamping its seal on design calculations and engineering analyses, verifying that the manufacturer’s proposed fabrication, installation methods and details adequately translate the results of the design calculations and engineering analyses into the work, before submitting Shop Drawings to Engineer for review.

Include copies of manufacturer's specifications, standard and custom detail drawings and installation instructions and manufacturer’s catalog showing complete selection of standard and custom components, auxiliary system components and miscellaneous accessories for selection by Engineer. Include all plans and elevations identifying the location of all railing and handrails, and all expansion joints. Show all anchorage items.

Profiles of stainless steel welded pipe railing and handrail system components, and the details of forming, jointing, sections, connection, internal supports, trim, and accessories. Show details of the stainless steel welded pipe railing and handrail drawn at 1-1/2 inch scale.

Calculations for the complete design and engineering analysis of the stainless steel welded pipe railing and handrail system, auxiliary system components and anchorages, including calculations showing compliance with performance criteria specified, prepared, signed and stamped with the seal of a registered professional engineer licensed to practice in the State of New York and recognized as an expert in the required work.

D. Maintenance Manuals (O&M Manuals): Upon completion of the installation of the stainless steel welded pipe railing and handrail system submit the following:

Product name and manufacturer.

Name, address and telephone number of manufacturer and local distributor.

Detailed procedures for routine maintenance and cleaning, including recommended cleaning materials, application methods and precautions as to use of materials that may be detrimental to finish when improperly applied.

E. Certificates: Submit for approval the following:

Copies of material purchase receipts, for this project, signed by a certified and licensed Notary Public, verifying that material purchased for the Work complies with material designations specified as confirmed by approved Shop Drawings.

Furnish certification that laboratory loading tests have been performed on the handrail, railing and anchorage systems verifying compliance with performance criteria specified, and that it conforms to all applicable CFR, ANSI and ASTM requirements for loads and deflections and that the data derived from such tests has been used by the registered professional engineer in the design calculations and engineering analyses of the welded pipe railing and auxiliary system components.

Registered professional engineer who prepares, signs and stamps its seal shall provide a written statement confirming responsibility for the design and attesting that the design prepared meets the performance criteria required by the Contract Documents, the requirements of governing authorities having jurisdiction, and conforms to prevailing standards of practice.

Certification of welders and welding procedures shall be submitted as specified.

1.08 Delivery, Storage, and Handling

A. Delivery of Materials:

Deliver stainless steel welded pipe railing and handrail and all accessories dry and undamaged, with manufacturer's protective coating intact, bearing original intact factory labels.

Stainless steel welded pipe railing systems which are damaged during delivery or while being unloaded shall not be stored on Site. Remove such units from Site and replace panels with new, undamaged material.

B. Storage of Materials:

Store stainless steel welded pipe railing and accessory materials in a dry location and in a manner that will protect strippable coating from exposure to sun and condensation; with good air circulation around each piece and with protection from windblown rain.

Store stainless steel welded pipe railing and accessory materials under tarpaulin covers and in an area protected from dirt, damage, weather and from the construction activities of all Contractors. Do not store outside or allow items to become wet or soiled in any way while on Site.

Do not store in contact with concrete, earth or other materials that might cause corrosion, staining, scratching or damage to finish. Do not install system components which become dented, scratched or damaged in any way. Remove such components from site and replace with new, undamaged material.

C. Handling of Materials:

Do not subject stainless steel welded pipe railing and accessory materials to bending or stress. Do not carry or transport panels in the horizontal (flat) position. Hold panels upright on edge when handling.

Do not damage edges or handle material in a manner that will cause scratches, warps or dents.

Keep on-Site handling to a minimum.

Maintain protective covering on railings and handrails. System components which are damaged during installation shall be removed from Site and replaced with new, undamaged material.

1.09 Spare Parts, Special Tools, and Supplies

A. Not Used

1.10 Special Warranty Provisions / Guarantee Periods

A. Not Used

PRODUCTS

1.11 Manufacturers

A. Not Used

1.12 Materials / Equipment

A. Stainless Steel Mechanical Tubing: Provide the following:

Stainless Steel Mechanical Tubing: ASTM A554, Type 316L, annealed. Provide posts and rails with 1.90-inch outside diameter, 0.109-inch wall thickness.

Stainless Steel Fittings: Same material as rails except where otherwise shown on Contract Drawings.

B. Post Reinforcing Insert: ASTM A312, Grade TP316L, welded stainless steel pipe, 1.66-inch outside diameter, 0.140 wall thickness (Schedule 40S).

C. Toe-boards: ASTM A666, Type 316L stainless steel. Provide Toe-boards to the dimensions and details shown on the Contract Drawings and as follows:

Provide same finish as rails and handrails, securely fastened in place with not more than 1/4 inch clearance above floor level.

Provide for thermal expansion and contraction in Toe-boards over the entire range of temperatures specified. Thermal movement shall not cause warping or buckling of Toe-boards.

Toe-boards shall meet the requirements of 29 CFR, Part 1910.23, Section (e). Minimum thickness of stainless steel plate shall be3/16-inch.

Toe-boards shall follow curvature of stainless steel welded pipe railing. Where stainless steel welded pipe railing is shown to have curved contours at corners, or other locations, the toe-board shall likewise be curved to follow line of stainless steel welded pipe railing system.

D. Brackets, Flanges, and Plates: Provide ASTM A666, Type 316L stainless steel brackets, flanges and plates. Components shall be in accordance with manufacturer's recommendations and as acceptable to Engineer as shown on approved Shop Drawings.

E. Chain, Snaps and Eyebolts: Provide oblong 0.250-inch welded link, Type 316L stainless steel chain weighing 57 pounds per cubic foot, each link 1-1/8-inch by 7/16-inch. Provide 1/4-inch threaded quick link stainless steel eye bolts with heavy-duty swivel snaps and spring loaded latches.

F. Post Sleeves: Provide the following ASTM A312, Grade TP316Lstainless steel sleeves:

Post Sleeves for Fixed Railing: 3.50-inch outside diameter, 0.216-inch wall thickness (Schedule 40S), 6-inch long post sleeves, as required for anchorage to concrete and masonry. Components shall be in accordance with manufacturer's recommendations and as acceptable to Engineer as shown on approved Shop Drawings.

Removable Railing Post Sleeves: 6-inch long, Schedule 40S post sleeves for removable railing sections. Size post sleeves for snug fit to avoid removable railing lateral movement. Provide continuous cylindrical Teflon inserts to fill annular space between sleeve and post with top cover flange flush with top of mounting surface.

G. Railing Gates: Provide the following:

Hinges: Provide railing gates with two self-closing hinges.

Latches and Stops: Provide one latch and stop with rubber bumper and 1-inch diameter plastic knob for each railing system gate shown on the Contract Drawings.

H. Accessory and Miscellaneous Materials: Provide all accessory items and system components of ASTM A666, Type 316 stainless steel, finished to match posts and rails.

I. Concealed Connector Sleeves (Rail Splice Inserts): Provide ASTM A312, Grade TP316L stainless steel, 1.66-inch outside diameter, 0.140-inch wall thickness (Schedule 40S), minimum 5-inches long.

J. Welding Electrodes and Filler Metal: Provide type and alloy of filler metal and electrode as recommended by manufacturer of metal to be welded and as required for strength and compatibility of finished items.

K. Concrete and Masonry Anchors: Concrete and masonry anchors shall be as specified in Section 05 05 23.02 - Miscellaneous Metal Fastenings.

Anchors shall be of stainless steel Type 316 and a minimum size of 1/2 inch diameter.

L. Non-Shrink, Non-Metallic Grout:

Provide formulation that is resistant to erosion from water exposure without needing protection by a sealer or waterproof coating and is recommended by the manufacturer for exterior use.

Pre-mixed, factory-packaged, non-staining, non-corrosive, non-gaseous, cementitious grout, complying with ASTM C1107, requiring only the addition of water at the Site.

M. Bolting Materials: As specified in Section 05 05 23.02 - Miscellaneous Metal Fastenings.

1.13 Fabrication / Assembling / Finishes

A. Provide stainless steel welded pipe railing and handrail systems completely factory fabricated using fabrication techniques recommended for stainless steel. Use tools and fabrication equipment dedicated only to the fabrication of Type 300 series stainless steels to completely eliminate ferrous contamination.

B. Preassemble items in the shop to the greatest extent possible, so as to minimize field splicing and assembly of units at the Site. Disassemble units only to the extent necessary for shipping and handling limitations. Clearly mark units for reassembly and coordinated installation.

Railing hall be assembled in sections as long as practicable. Posts shall be connected to flanges and fittings by welding. Surfaces of butt joints shall be ground smooth and square to obtain flush and tight joints undetectable from surrounding finish on all surfaces of the pipe.

On-Site welding shall not be permitted.

C. Form exposed work true to line and level with accurate angles and surfaces and straight sharp edges. Fabricate all corners without the use of fittings. Form bent metal corners to the smallest radius possible without causing grain separation or otherwise impairing the work. Provide not less than 4 inch outside radius.

Form simple and compound curves by bending members in jigs to produce uniform curvature for each repetitive configuration required; maintain cylindrical cross section of member throughout entire bend without buckling, twisting, cracking, or otherwise deforming exposed surfaces of handrail or railing components.

D. Cope intersections of rails and posts and weld joints. Butt weld end-to-end joints of railings or use welding connectors. Lower rails shall be coped and welded to the posts.

Components shall be coped at perpendicular and skew connections to provide close fit.

E. Provide for expansion and contraction in the railing system as required by performance criteria. At each side of expansion joints located in the structure to which the railing system is attached, provide an end post and railing return located 16 inches from the joint. Separation between returns shall match the width of the structure expansion joint.

F. Cut, reinforce and tap components to receive finish hardware, screws, and similar items.

G. Shear and punch metals cleanly and accurately. Remove burrs from exposed cut edges and ease exposed edges to a radius of approximately 1/32 inch.

H. Provide wall returns at ends of wall-mounted handrails. Close end returns, unless clearance between end of handrail and wall is 1/4 inch or less.

Close ends of handrail and railing members with prefabricated end fittings.

I. Chains

Chains shall be provided across openings in stainless steel welded pipe railing where shown on the Contract Drawings. One end of each chain shall be attached to a 1/4-inch eye bolt in the post and the other end shall be attached by means of an approved heavy stainless steel swivel eye snap hook to a similar eye bolt in the opposite post.

J. Weep Holes

Provide 15/64 inch diameter weep holes at the lowest point on all railing system posts and along the bottom side of railing system rails.

Provide pressure relief holes at closed ends of handrails and railings.

K. Welding

Welding shall comply with the requirements of AWS and NYBC.

Provide uniform, tight and dense welds, uniformly ground smooth and blended so no roughness shows after finishing, and without visible transition to metal surfaces so that welded surface matches contours of adjoining surfaces.

a. Welded joints shall be continuous, and made watertight.

b. Field welding shall not be permitted unless otherwise specified or shown on the Contract Drawings.

All welding shall be performed with Inert Gas Tungsten Arc Welding using Direct Current, Straight Polarity. The non-consumable electrode shall be 1/16-inch diameter, 2 percent threated tungsten electrode and have a point ground on the end similar to a pencil point. The welding current shall be between 70 and 100 amperes. The shielding gas shall be argon, helium or a combination of both with a minimum flow of 15 cubic feet per hour. Filler metal shall be Type 316L, stainless steel.

L. Finishes

All handrail, railing, exposed supports and Toe-boards shall be provided with a uniform, bright, mill-polished surface obtained by finishing with a 150 - 220 mesh abrasive, following initial grinding with coarser abrasives. The finish shall be characterized by very fine parallel “grit lines” and be within a uniform range established as either an AISI No. 4 or 5 finish, with final finish established by Sample submission as approved by Engineer in compliance with Section 05 06 00.01 - Schedules for Stainless Steel Work and AISI/NIDI 9012 or AMP/NAAMM AMP 503.

1.14 Source Quality Control / Shop Tests

A. Obtain all stainless steel welded pipe handrail and railing system components and accessories from the same manufacturer.

B. Provide qualified welding processes and welding operators in accordance with ANSI/AWS "Structural Welding Code" D1.1, Section 5, Qualification.

C. Provide certification that all welders employed on, or to be employed for, the fabrication of the stainless steel welded pipe rail system have satisfactorily passed AWS qualification tests within the previous twelve months. Contractor shall ensure that all certification are kept current.

D. Allowable Tolerances:

Limit variation of cast-in-place inserts, sleeves and field-drilled holes to the following:

a. Spacing: ± 3/8 inch.

b. Alignment: ± 1/4 inch.

c. Plumb: ± 1/8 inch.

Limit variation of completed handrail and railing system alignment to 1/4 inch in 12 feet and 1/16 inch in 3 feet.

E. Set rails horizontal and parallel to rake of steps or ramps to within 1/4 inch in 12 feet.

EXECUTION

1.15 Examination / Preparation

A. The Contractor shall examine the alignment of the substrate and conditions under which the stainless steel welded pipe railing system work is to be performed and notify Engineer in writing of unsatisfactory conditions. Do not proceed with the stainless steel welded pipe railing system work until unsatisfactory conditions have been corrected in a manner acceptable to Engineer.

B. Protection: Protect cast-in-place sleeves and field-drilled holes from debris and water intrusion by use of temporary covers or removable foam inserts that completely fill the cast-in-place sleeve.

C. Coordinate installation of anchorages for handrails and railings. Furnish setting drawings, templates, and installation instructions for installing anchorages, including sleeves, concrete inserts, anchor bolts, and items with integral anchors, that are to be embedded in cast-in-place concrete or masonry. Deliver to Site in time for installation.

D. Verify dimensions by taking measurements at the Site without causing delay in the work. Where measurements cannot be taken at the Site without delaying the work, establish dimensions and proceed with fabrication of handrails and railings without Site measurements. Coordinate construction to ensure that actual dimensions correspond to established dimensions.

E. Verify to Engineer gage of stainless steel welded pipe railing posts and rails brought to the site by actual measurement of on-site material in the presence of Engineer

1.16 Erection

A. Fastening to In-Place Construction

General: Do not erect components which have become scarred, dented, chipped, discolored or otherwise damaged or defaced. Railing and handrail system components which have holes, cuts, gouges, deep scratches or dents of any kind shall be removed from the Site before installation. Repairs to correct such work shall not be approved by Engineer. Remove and replace with new material.

Posts and rail sections shall be brought into final alignment by stainless steel welded pipe railing installer.

Provide anchorage devices and fasteners where necessary for securing railing and handrail items to in-place construction, including threaded fasteners for concrete and masonry inserts, through-bolts and other connectors as required. Use only Type 316 stainless steel devices and fasteners.

Flanged fittings shall be secured to steel with nuts, bolts and washers; to hollow glazed structural tile and masonry with masonry anchors; and to solid grouted masonry and concrete with concrete anchors. Flanges not bearing on metal shall be set in non-shrink grout.

Provide end posts and railing returns at 16-inches on each side of structural expansion joints. Separation between returns shall match the width of the structural expansion joint.

Field-dowel connections shall be located at posts.

B. Cutting, Fitting and Placement

Perform cutting, drilling and fitting required for installation. Set the work accurately in location, alignment and elevation, plumb, level, true and free of rack, measured from established lines and levels.

Fit exposed connections accurately together to form tight hairline joints. Do not cut or abrade the surface of units which have not been finished after fabrication, and are intended for field connections by mechanical or other means without further cutting or fitting.

Handrails supported from walls, partitions and similar construction shall be supported by brackets located within 18 inches of handrail terminations and at intermediate points spaced not more than 5 feet on center. Drill wall plate portion of the mounting bracket to receive one bolt, unless otherwise shown on the Contract Drawings as concealed anchorage. Provide flush-type wall-return fittings with the same projection as that shown for mounting brackets. Secure mounting brackets and wall-return fittings to building construction as follows:

a. For anchorage to concrete and solid masonry units, use concrete anchors.

b. For anchorage to hollow masonry units, use toggle bolts having square heads.

Make all splices as near as possible to posts but not exceeding 12 inches from the nearest post. Permanent field splice connections shall be made using manufacturer's recommended minimum

5-inch long Type 316 stainless steel connector sleeves. Tight press-fit all field splice connectors and install in accordance with manufacturer's written instructions as provided on approved Shop Drawings.

Space posts 5 feet - 0 inches on center and connect sections as shown on Shop Drawings approved by Engineer.

Expansion Joints: Provide slip joints with internal sleeve extending 2 inches minimum beyond joint on each side. Construct expansion joints as for field splices except fasten internal sleeve securely to one side of rail assembly. Locate joints within 6 inches of posts. Submit proposed locations of expansion joints to Engineer.

1.17 Field Testing / Quality Control

A. An anchor testing program shall be established based on ASTM E488 and ASTM E894. Perform tension, shear, flexure, and shock loading resistance tests.

Test a minimum of one anchor for every three posts and one anchor for every three railing supports.

Based on initial results of testing, test additional anchors in order to verify that design safety factors have been provided by anchor installation.

B. Anchors: Suitable equipment shall be used to perform tests required to verify correct installation of anchors and provide proof loads on anchors installed at the Site in accordance with ASTM E488 and ASTM E894.

C. The Contractor shall provide a field report on anchor testing results to Engineer, in compliance with ASTM E488 and ASTM E894, for final approval of welded pipe railing system along with recommendations for remedial work required to bring anchors up to load resistance requirements specified and required by governing authorities having jurisdiction.

D. Final payment and final approval will not be provided to Contractor until report has been approved by Engineer and remedial work is tested and shown to be in compliance with specified performance requirements.

1.18 Startup / Demonstration

A. Not Used

1.19 Adjusting / Protection / Cleanup

A. Adjusting

Adjust railings and handrails prior to securing in place to ensure proper matching at butting joints and correct alignment throughout their length. Plumb posts in each direction.

Anchor posts in concrete by means of sleeves set and anchored into concrete substrate and by side-mounting, in areas shown on the Contract Drawings. Provide closure secured to the bottom of the sleeves. Unless otherwise shown on the Contract Drawings, after the posts have been inserted into the sleeves, fill the annular space between posts and sleeves solid with non-shrink, non-metallic grout as specified. Crown grout away from posts.

Anchor posts to steel with stringer or support flanges, angle-type or floor-type as required by conditions, shop-connected to posts and bolted to the steel supporting members.

Side-mount posts by fastening them securely in brackets attached to steel or concrete and in accordance with Shop Drawings approved by Engineer.

Provide hinged railing sections where shown on the Contract Drawings. Provide hinges and latch for connection to adjacent railing.

At walkways and other locations where railing is provided on each side, locate railing system posts opposite each other.

B. Protection

Protect railing system from damage by the work of all contractors.

Remove defective railing system components immediately upon discovery of damage, and replace with material that meets specification requirements, so that all stainless steel welded pipe railing system components will be without damage or surface blemish at the time of Substantial Completion.

C. Cleanup

Clean exposed surfaces of stainless steel welded pipe railing work of every substance before leaving the site after completion of installation. Comply with recommendations of both the stainless steel welded pipe railing and finish manufacturer. Do not use abrasives or non-approved solvent cleaners. Test cleaning techniques on an un-used section of railing before employing cleaning technique in the work.

a. Remove protective plastic as recommended by manufacturer.

b. Remove all stains, dirt, grease and other substances by washing railings and handrails thoroughly using clean water and soap. Rinse with clean water.

c. Do not use acid cleaning solutions, steel wool or other harsh abrasives.

d. If stains remain after washing, remove finish and restore in accordance with recommendations of the manufacturer.

Leave stainless steel welded pipe railing and handrails, free from dents, burrs, scratches, holes and other blemishes. Refinish minor scratches to be indistinguishable from adjacent un-scarred areas. If, after refinishing, damage remains visible when viewed from five feet away, or if finish of work has been altered to the point where it appears different from adjacent work, Contractor shall replace damaged work with new undamaged material at no additional expense to the City.

END OF SECTION

05 53 01.02 STAINLESS STEEL FLOOR GRATINGS

GENERAL

1.20 Summary

A. The Contractor shall furnish and install all stainless steel floor gratings as indicated on the Contract Drawings and specified herein.

B. Gratings shall be complete with frames, anchors, fastening devices and miscellaneous appurtenances.

1.21 Payment

A. There is no specific payment provision for this Section.

1.22 Related Sections

A. Section 05 05 23.01 - Welding.

1.23 References

A. ASTM A167 - Stainless and Heat-Resisting Chromium-Nickel Steel Plate, Sheet, and Strip.

B. ASTM A276 - Stainless and Heat-Resisting Steel Bars and Shapes.

C. ASTM A480 - General Requirements for Flat-Rolled Stainless and Heat-Resisting Steel Plates, Sheet and Strips.

D. ASTM A666 - Austenitic Stainless Steel, Sheet, Strip, Plate, and Flat Bar.

E. ASTM F593 - Stainless Steel Bolts, Hex Cap Screws and Studs.

F. ASTM F594 - Stainless Steel Nuts.

G. ANSI/NAAMM MBG 531 - Metal Bar Grating Manual.

H. ANSI/NAAMM MBG 532 - Heavy Duty Metal Bar Grating Manual.

I. NAAMM MBG 533 - Welding Specifications for Fabrication of Steel, Aluminum and Stainless Steel Bar Grating.

J. ASTM A992 - Steel Plates, Shapes and Bars; Carbon, Structural.

K. National Association of Architectural Metal Manufacturers (NAAMM).

L. New York City Building Code (NYBC).

1.24 Description

A. Design Requirements

The design live load for grating covering floor openings shall be that designated for the adjacent floor area but not less than a uniform load of 150 pounds per square foot or a concentrated load of 300 pounds distributed over a 12-inch square area at the center of span, whichever produces the greater stress.

The design live load for grating on platforms shall be as designated on the Contract Drawings but not less than a uniform load of 100 pounds per square foot.

Grating in areas subject to vehicular traffic shall be designed for the maximum weight vehicle which can access the area. Forklifts or other similar wheeled vehicles shall have maximum wheel loads defined by the manufacturer. When wheel loads are not defined by the manufacturer, the wheel load shall be defined as 40 percent of the gross loaded weight of the maximum size vehicle to be accommodated.

The maximum allowable deflection due to dead load plus live load shall not exceed the span divided by 240, but not more than 1/4 inch.

Gratings shall be designed in accordance with the design criteria specified herein, and the NAAMM specifications, unless otherwise noted on the Contract Drawings or as required by the NYBC.

1.25 Quality Assurance

A. Not Used

1.26 Submittals

A. The Contractor shall submit Shop Drawings and material specifications of all gratings for approval by the Engineer.

B. Gratings shall not be manufactured until the Contractor's Shop Drawings have been approved by the Engineer.

C. Samples of grating and fastening devices shall be submitted for approval by the Engineer.

1.27 Delivery, Storage, and Handling

A. Not Used

1.28 Spare Parts, Special Tools, and Supplies

A. Not Used

1.29 Special Warranty Provisions / Guarantee Periods

A. Not Used

PRODUCTS

1.30 Manufacturers

A. Not Used

1.31 Materials / Equipment

A. Type of Gratings

Unless otherwise shown or specified, gratings shall be one of the following types and shall be the product of one manufacturer:

a. Type "A" - Parallel bearing bars, with cross members at right angles.

b. Type "B" - Parallel bearing bars, with diagonal cross members.

B. Materials

Floor gratings and appurtenances shall be Type 316L Stainless Steel and shall conform to the requirements specified herein and to the following standards:

a. Gratings: ASTM A167; ASTM A480; ASTM A666

b. Frames, Curb Angles, Braces, Skirt Angles, Bolts and Fastening Devices: ASTM A276; ASTM A480; ASTM F593, ASTM F594

1.32 Fabrication / Assembling / Finishes

A. Gratings shall be accurately fabricated, free from warps, twists or other defects which affect the appearance and serviceability of the grating,

B. The tops of the grating bearing bars and cross bars shall be in the same plane.

C. Gratings shall have a mill finish unless otherwise noted on the Contract Drawings.

D. All welds shall be ground smooth and conform to the requirements of Section 05 05 23.01 - Welding and NAAMM MBG 533.

E. Openings in and edges of all grating sections shall be banded with bearing bars. Bands shall be welded to all intersecting members.

F. Grating Fabrication

Type "A" Grating (Pressure Locked or Welded) shall consist of parallel bearing bars spaced not more than 1-3/16 inches on centers joined by cross members spaced not more than 4 inches on center (unless shown otherwise on the Contract Drawings), to form rectangular openings. Approved welded, electric-forged, slotted, friction fitted or interlocking joints shall be used in joining cross members to the bearing bars to give the grating the required strength, rigidity and durability. The distance between the support and the nearest cross bar shall not exceed 2 inches.

Type "B" Grating (Welded or Riveted) shall consist of parallel bearing bars spaced not more than 1-5/16 inches on center, joined by welded or riveted bent diagonal cross bars. Rivets shall be 1/4 inch in diameter and shall be spaced not more than 4 inches on center unless shown otherwise on the Contract Drawings. The distance between the support and the center of the nearest rivet shall not exceed 1 inch.

Minimum grating depth shall be 1-1/4 inches with bearing bars not less than 3/16 inches thick.

Welded cross members shall not be less than 3/16 inch in thickness. Mechanically interlocked cross members shall not be less than 1/8 inch in thickness. The depth of cross members shall not be less than one-half the depth of the bearing bars, but such depth need not exceed 1 inch. Riveted cross members shall be as specified for mechanically interlocked cross members.

Each section of grating shall be sized to weigh a maximum of 100 pounds unless noted otherwise on the Contract Drawings.

G. Grating Cut-outs

Cut-outs shall be provided in the grating for the passage of pipe, valve stems, columns and similar work. Where more than two bearing bars are included in the cut-out, banding bars of the same dimensions as the bearing bars shall be provided around the opening and welded or electric-forged to the component parts of the grating.

H. Grating Stair Treads and Landings

Grating stair treads shall be 1 inch wider than tread widths shown on the Contract Drawings and shall be securely fastened to angles or carrier bars which in turn shall be fastened to stringers. The outer edge or nosing of stair treads shall be so constructed as to make it distinctly visible and contrasting with the other part of the tread. Non-slip nosings shall be furnished on all the stair treads and landings.

1.33 Source Quality Control / Shop Tests

A. Not Used

EXECUTION

1.34 Examination / Preparation

A. Field Measurements

The Contractor shall check all dimensions in the field after all piping and equipment are set in place and determine the exact dimensions and locations of openings and cut-outs.

Templates shall be made where required for location and size of openings and cut-outs.

The Contractor shall field verify all pertinent dimensions prior to grating fabrication.

1.35 Installation

A. Installation

Gratings shall be installed with each section readily removable and replaceable. Adjacent units shall be neatly fitted together.

The clearance at the ends or between sections of gratings shall be a maximum of 1/4 inch.

Tops of gratings shall be set flush with surrounding construction.

Gratings shall be set with a full and uniform end bearing on the stainless-steel frames to preclude rocking movement; wedges or similar shimming devices shall not be used.

B. Fastening Devices

Approved fastening devices shall be installed to hold the gratings rigidly to the supports with means for easy removal.

Fastening devices shall not protrude above the walking surface of the grating.

Fasteners shall be installed in accordance with the manufacturer's recommendations.

1.36 Field Testing / Quality Control

A. Not Used

1.37 Startup / Demonstration

A. Not Used

1.38 Adjusting / Protection / Cleanup

A. Not Used

END OF SECTION

NO TEXT ON THIS PAGE

SECTION 09 91 00 - PAINTING

APPURTENANT WORKS – IG/PC

09 91 00 PAINTING

GENERAL

1.01 Summary

A. Painting, as specified herein, shall include, but not be limited to, preparation of surfaces, shop painting of items furnished, and field painting of structures, piping, conduit, ducts and equipment, and marking of piping and electrical conduit.

B. Painting shall be provided as shown on the Contract Drawings, specified herein or in the Contract, or as required for a complete installation.

1.02 Payment

A. There is no separate payment provision for this Section.

1.03 Related Sections

A. Section 40 05 97 - Identification for Process Equipment.

1.04 References

A. Codes and standards referred to in this Section shall be as follows:

a. SSPC - The Society of Protective Coatings (formerly of Steel Structures Painting Council)

b. SSPC-SP 1 Solvent cleaning

c. SSPC-SP 6 Commercial blast cleaning

d. SSPC-SP 10 Near white cleaning

e. SSPC-SP 2 Hand tool cleaning

f. SSPC-SP 11 Power tool cleaning to bare metal

g. SSPC- SP 15 Commercial grade power tool cleaning

h. SSPC-SP 16 Brush off Blast Cleaning of Non Ferrous Metals

ASTM - American Society for Testing Materials

i. ASTM D3359 - Measuring Adhesion by Tape Test

j. ASTM D16- Terminology Relating to Paint, Varnish, Lacquer, and related Products.

B. NSF- National Sanitation Foundation

1.05 Description

A. Safety Requirements

All painting materials specified herein, and ingredients of coatings containing substances that are potentially toxic or hazardous shall be shipped with warning labels. These products shall be applied in strict conformance with the safety requirements of the following:

a. The Manufacturer

b. The National Paint and Coatings Association (NPCA)

c. The Society of the Plastics Industry (SPI)

d. The Manufacturing Chemist Association (MCA)

e. The Society of Protective Coatings formerly of Steel Structures Painting Council (SSPC)

f. The United States Government Occupational Safety and Health Administration (OSHA)

g. The Health and Safety Requirements of the State of New York (PESH-Public Employees Safety and Health)

h. The Health and Safety Requirements of the City of New York (COSH-Citywide Office of Safety and Health)

B. Environmental Requirements

Weather:

a. Air and surface Temperatures: Prepare surfaces and apply and cure coatings within air and surface temperature range in accordance with manufacturer's instructions.

b. Surface Temperature: Minimum of 5 degrees F (3 degrees C) above dew point.

c. Relative Humidity: Prepare surfaces and apply and cure coatings within relative humidity range in accordance with manufacturer's instructions.

d. Precipitation: Do not prepare surfaces or apply coatings in rain, snow, fog or mist.

e. Wind: Do not spray coatings if wind velocity is above manufacturer's limit.

Ventilation

f. Provide ventilation during coating evaporation stage in confined or enclosed areas in accordance with AWWA D102.

Dust and Contaminants:

g. Schedule coating work to avoid excessive dust and airborne contaminants.

Protect work areas from excessive dust and airborne contaminants during coating application and curing.

1.06 Quality Assurance

A. Paint Quality Assurance Records

The following information shall be recorded for every paint project and submitted to the construction Project Manager/ Project Manager:

a. Date

b. Shift

c. Part Temperature

d. Dew Point

e. Paint Batch Number/s

f. Mixing Time for Each Part and the Combined Parts of a Paint System

g. Pot Life

h. Curing Time of Primer and Finish Layers

i. Paint thickness measurements (DFT)

j. Holiday Test Results and Repair Data

k. Peel Test Results and Repair Data

l. Foreman or Supervisor's Signature

B. Test Surfaces

The Contractor shall paint certain areas of concrete and other surfaces, where directed, using approved coatings for use by the Engineer for comparisons with coating systems applied during the progress of the work.

Such coated areas shall not be subsequently painted during the entire period of construction or during the period one-year after the date of Substantial Completion.

At or about one year after Substantial Completion the test surfaces shall be inspected by the Engineer for any deterioration such as cracks, blisters, flakes and excessive chalking.

The Contractor shall supply all material and labor and shall perform any remedial work on all such deteriorated surfaces using the coating system represented by the test surface at no additional cost to the City.

C. Painting Requirements

General: The Contract does not specify the surface treatment for every individual part of the work, however all work in this Contract shall be provided with a complete painting job throughout as specified herein. All items customarily or specified to be shop painted shall be primed and finished in the shop. Field painting will not be allowed unless requested in writing to the Engineer, and written consent is given by the Engineer. In general, only areas that are to be field welded are not to be painted until field erected.

Manufacturer's Standard Finished Items: The following items shall be furnished with the manufacturer's standard prime and finish coats applied in the shop: pumps, motors, gears, gear housings, air compressors, wall fans, temperature control and instrument panels, process air blowers, engines, filters, strainers, air dryers, meters, gas boosters, gas turbines, generators, panelboards, transformers, boilers, condensing units, water chillers, cooling towers, condensers, heat exchangers, humidifiers, air handling units, sound attenuators, air conditioning and dehumidification units, convector cabinets, unit heaters, enclosures for finned tube radiators, cabinet heaters, boilers, wood seats, lockers, metal toilet partitions, metal urinal screens, aluminum fascia, motor control centers, aluminum light standards, and hoisting equipment. Steel reinforcing bars for concrete shall be coated in accordance with the Contract. When powder coatings are required by the Contract, the powder coatings shall be in accordance with the requirements of the manufacturer of the item.

Painted Items: The following items shall be painted as specified herein: steel water storage tank, structural steel and wrought metals, composite metal floor deck, pipelines, hangers and supports, sluice gates, pumps and pumps parts, valves, valve and sluice gate operators and stands, guard housings, air filter equipment, effluent strainers, heat exchangers, air receivers, tanks, air silencing equipment, storage tanks, gas domes, sediment tanks, steel stair framing, steel lintels, hollow metal doors and frames, gypsum wallboard, interior concrete block, interior concrete walls, columns, beams and ceilings, covering over insulation on piping, electrical conduit systems, small piping and copper tubing, ducts, covering over ducts, and PVC piping, valves and fittings.

Unpainted Items: The following items shall not be painted, unless otherwise specified: registers, grilles, dampers and linkage, fire sprinklers, name and identification plates and tags, floor gratings, brass pipe and fittings, brass valves, stainless steel, wood, stop log panels, spray-on fireproofing steel to receive spray-on fireproofing, surfaces to receive field welding, and fraying surfaces of high strength bolted connections.

1.07 Submittals

A. Contractor shall submit Shop Drawings for approval of the Engineer. Submittals shall include, but not be limited to: catalog cuts and reference materials.

Color Chart: The Contractor shall submit the manufacturer's standard color chart for color selection for painting of items other than process piping, valves, pipe line equipment, pump casings, blowers and other mechanical equipment and their drive units, all of which shall be in conformance with the "BACKGROUND COLOR" of the General Color Code specified in Section 40 05 97 - Identification for Process Equipment.

Paint Samples: The Contractor shall submit:

a. Two one-quart samples of each required kind of paint material, or the ingredients thereof which are to be mixed on the job.

b. Samples shall be labeled as required under Article 1.07, and shall include the certificate of the manufacturer stating the actual percentages by weight and volume of all ingredients entering into the mixture.

c. Upon request, further samples shall be provided as the work progresses.

d. Painting materials shall not be applied without written approval of samples by the Engineer.

Painted Surface Samples:

e. Upon request, duplicate samples of the results obtained by painting and finishing various materials on the work shall be submitted. Such samples, and the approved paint applied thereto, shall be applied in strict conformance with these Sections.

f. Finished areas shall be considered adequate for the purpose of determining the quality of the work. All painting work shall be performed in a quality equal to the approved samples.

g. Where equipment is customarily shipped with a standard finish, samples of the proposed color and finish shall be submitted for approval prior to shipping.

Certification: The Contractor shall furnish:

h. Affidavits from the manufacturer certifying that materials furnished conform to the requirements specified

i. And that paint products have been checked for compatibility.

Immersion Certification: The Contractor shall furnish:

j. Affidavits from the manufacturer certifying that coatings in immersion service contain no water soluble solvents or corrosion inhibitive (active) pigments with slight water solubility.

List of Paints: The Contractor shall submit:

k. A list of paint products with mil thickness and solids by volume, including all paint applied in the shop and in the field. The list shall be in accordance with the requirements of this Section and the recommendations of the paint manufacturer.

Applicator's Quality assurance:

l. Submit list of a minimum of 5 completed projects of similar size and complexity to this work. Include for each project:

1) Project name and location

2) Name of owner

3) Name of contractor

4) Name of engineer

5) Name of coating manufacturer

6) Approximate area of coatings applied.

7) Date of completion.

Warranty:

m. Submit manufacturer's standard warranty.

1.08 Delivery, Storage, and Handling

A. General: All products and materials shall be delivered, stored, and handled as specified in Contract Documents and as follows:

B. Delivery and Storage: All paint materials delivered and stored at the site shall be from the approved manufacturer only.

C. Packaging and Labeling: Paints, stains, varnish or ingredients of paints to be used on the job shall be properly prepared, packed, and labeled. All materials shall be delivered to the site in original, unbroken containers bearing the manufacturer's printed labels, which shall specify the following:

Project and Contract No.

Name of Manufacturer

Address of Manufacturer

Generic Name of Paint or Ingredients

Brand and Trade Mark

Schedule Letter as Listed Herein

Percent Solids by Volume

Net Quantity

Date of Manufacturer

Date Packed

D. Storage: Painting materials shall be stored at the site in manner and place which shall be in accordance with applicable codes and regulations, and in accordance with manufacturer's instructions. The storage space shall be kept clean at all times. Every precaution shall be exercised to eliminate fire hazards.

1.09 Spare Parts, Special Tools, and Supplies

A. Not Used

1.10 Special Warranty Provisions / Guarantee Periods

A. Not Used

PRODUCTS

1.11 Manufacturers

A. Standards of Quality: Proprietary protective coatings included herein by brand name or trade mark are given solely as standards of quality and for bidding purposes and do not preclude the use of an approved equivalent.

B. Latest Products: Unless specified otherwise, the proprietary protective coatings of the manufacturer's latest products in regular production on the date of receipt of order shall be provided.

C. Equivalents: Equivalent products shall be of a standard, regularly produced product of a manufacturer. Equivalent products shall be submitted on their applicable published printed literature that states the generic type, instructions for use, solids by volume, application rates, and chemical components of vehicles and solids. Equivalent products shall be accompanied by a list of projects where each of the coatings has been used on new construction and has rendered satisfactory service for at least three years. Should the manufacturer's literature of the product being offered call for higher film thickness, the greater film thickness shall be applied, and the submitted schedule shall so state.

Paintings approved as manufactured by these Painting Manufacturers:

a. Tnemec Company, Inc., Kansas City, MO.

b. Sherwin Williams, Cleveland, OH.

c. International Paint, Houston, TX.

d. Carboline Company, St. Louis, MO.

e. PPG Amercoat, Little Rock, AR.

f. Or approved equal

1.12 Materials / Equipment

A. General:

Compatible shop and field coats shall be provided.

All coats of paint for any particular surface shall be from the same manufacturer.

Paint shall be of approved color as selected from the manufacturer's standard range of colors.

The Contractor shall submit proposed modifications to the specified painting systems for the Engineer's approval prior to use.

Paints containing lead or manganese driers shall not be submitted.

B. Classification of Paints: Alphabetical designations have been used in the following list to classify/group acceptable paints by the type and quality of materials desired. Equivalent material from the manufacturers named above or from other approved

manufacturers may be used in any of these paint groups in accordance with the procedures for substitution.

CLASSIFICATION OF PAINTS			
Paint Group	**Product Name and Number**	**Volume Solids %**	**Dry Film Thickness Mils per Coat**
A	**Tnemec:** Series V69 Hi-Build Epoxoline II	69	3.0-5.0
	Carboline: Carboguard 60/61 or Carboguard 635	72 65	3.0-6.0 3.0-6.0
	Sherwin Williams: Copoxy Shop Coat Primer	72	2.0-4.0
	International Paint: Integrated 345 or Devran 224HS	82	3.0-4.0
	PPG: Amercoat 370	66	4.0-6.0
B	**Tnemec:** Series V140-44 BR Pota-Pox Plus	69	4.0-6.0
	Carboline: Sanitile 120	38	1.0-2.0
	Sherwin Williams: Dura-Plate 235 (Waste Water)	72	3.0-5.0
	International Paint: Interseal 670 HS or Bar Rust 233HS	82	3.0-6.0
	PPG: Amerlock 2/400	85	4.0-6.0
C	**Tnemec:** Series 73 Endura-Shield	68	2.0-3.0
	Carboline: Carbothane 134 HG Carbothane 134WB	70 50	2.0-3.0 2.0-3.0
	Sherwin Williams: Acrolon-218HS Hi solid Polyurethane	65 65	3.0-5.0 2.0-3.0
	International Paint: Interthane 990HS or Devathane 379 UVA	68	2.0-3.0
	PPG: Amercoat 450H	67	2.0-4.0

CLASSIFICATION OF PAINTS			
Paint Group	**Product Name and Number**	**Volume Solids %**	**Dry Film Thickness Mils per Coat**
D	**Tnemec:** Series 69 Hi-Build Epoxoline II	69	3.0-5.0
	Carboline: Carboguard 61/691 Carboguard 635	80-100 65	4.0-8.0 4.0-8.0
	Sherwin Williams: Macropoxy 646	72	4.0-6.0
	International Paint: Interseal 670HS or Bar Rust 233H/236	82	3.0-6.0
	PPG: Amercoat 240	87	4.0-12.0
E	**Tnemec:** Series 90-97 Tnemec-Zinc	63	2.5-3.5
	Carboline: Carbozinc 859 or Carbozinc 859 VOC or Carboguard 60	66	3.5-5.0
	Sherwin Williams: Corothane I Galvapac	67	2.5-3.5
	International Paint: Interzinc 52 or Catha Coat 302H or Catha 316 (immersion)	59	3.0-5.0
	PPG: Novaguard 840	100	16.0-24.0
F	**Tnemec:** Series 130 Envirofill Masonry Filler	68	As Required
	Carboline: Sanitile 100 Block Filler	54	As Required
	Sherwin Williams: Heavy Duty Block Filler (dry) Kem Cati –Coat Epoxy Filler/ Sealer	80 72	As Required As Required
	International Paint: Truglaze 4015 or Intercryl 320	45	As Required
	PPG: Amerlock 400 BF	75	10.0-20.0
G	**Tnemec:** Series 151 Elasto-Grip	17	1.0-1.5
	Carboline: Galoseal WB	31	0.5-1.0
	Sherwin Williams: Pro-Mar 200 Primer	28	1.0-2.0
	International Paint: Glidden PC 1000	39	1.0-2.0
	PPG: Speedhide Interior Primer 6-2	28	1.0

CLASSIFICATION OF PAINTS			
Paint Group	**Product Name and Number**	**Volume Solids %**	**Dry Film Thickness Mils per Coat**
H	**Tnemec:** Series 6	43	2.0-3.0
	Carboline: Sanitile 155	38	2.0-3.0
	Sherwin Williams: Promar 200 Series (dry wall) DTM Acrylic (pipe insulation)	41	1.5-2.0
	International Paint: Glidden Dulux Lifemaster 1500 series	45	1.5-2.0
	PPG: Speedhide Interior Latex 6-411	37	1.5
I	**Tnemec:** Series 140-AA83 Pota-Pox Plus	82	4.0-6.0
	Carboline: Carboguard 691/ Phenoline 341	80-100	4.0-6.0
	Sherwin Williams: Macropoxy 646 PW	72-98	4.0-6.0 Upto 50 Mils
	International Paint: Interseal 670HS or Bar Rust 233HS	82	4.0-6.0
J	**Carboline:** Phenoline 311	47	1.0-3.0
	Sherwin Williams: Duraplate 235	72	3.0-5.0
	International Paint: Enviroline 54	70	3.0-5.0
K	**Carboline:** Reactamine 760 Plasite 4550S	100 100	20.0-100.0 20.0-60.0
	Sherwin Williams: Sherflex or C / Cote SC	100	25.0-100.0/ 20.0-60.0
	International Paint: Enviroline 222	100	20.0-100.0
L	**Tnemec:** Series 141	82	6.0-14.0
	Carboline: Reactamine 28 or Carboguard 1340 WB	100	1.0-2.0
	Sherwin Williams: Tank Clad HS	80	5.0-8.0
	International Paint: Ceilcote Interzone 954	85	14.0-18.0
M	**Tnemec:** Series 431 Perma- Shield PL	100	30.0-40.0

CLASSIFICATION OF PAINTS			
Paint Group	**Product Name and Number**	**Volume Solids %**	**Dry Film Thickness Mils per Coat**
	Carboline: Reactamine ET	100	30.0-40.0
	Sherwin Williams: Dura Plate UHS or Cor Cote SC	100	30.0-40.0
N	**Tnemec:** Series FC22 or 22 Epoxoline	100	20.0-30.0
	Carboline: 341	100	20.0-30.0
	Sherwin Williams: Sher Plate PW	100	25.0-30.0
	International Paint: Interline 975	80	30.0-40.0

1.13 Fabrication / Assembling / Finishes

A. Not Used

1.14 Source Quality Control / Shop Tests

A. Not Used

EXECUTION

1.15 Examination / Preparation

A. Surface Preparation: Prior to painting, Surface preparation prior to painting shall be in accordance with the following guidelines and as recommended by the painting material manufacturer.

SURFACE PREPARATION GUIDELINES	
Class of Work	Preparation of Surface Prior to Painting
Structural Steel and Steel Encased in Concrete, Masonry or Fireproofing	All visible oil, grease, dirt, dust, mill scale, rust, paint, oxides, corrosion products and other foreign matter shall be removed by compressed air nozzle blasting, centrifugal wheels or other specified method. Discoloration caused by certain stains shall be limited to no more than 33 percent of each square inch of surface area in accordance with Society of Protective Coatings (SSPC-SP6).

SURFACE PREPARATION GUIDELINES	
Class of Work	Preparation of Surface Prior to Painting
Steel (other than structural, encased or galvanized) and Steel Submerged Under Water	All visible oil, grease, dirt, dust, mill scale, rust, paint, oxides, corrosion products and other foreign matter shall be removed by compressed air nozzle blasting, centrifugal wheels or other specified method. Discoloration caused by certain stains shall be limited to no more than 5 percent of each square inch of surface area in accordance with Society of Protective Coatings (SSPC-SP10).
Galvanized Steel and Other Metals	All welds, beads, blisters or protuberances, other than identification markings shall be smooth, and other imperfections shall be removed. All nonferrous metals and galvanized steel, whether shop primed or field primed, shall be solvent cleaned in accordance with Society of Protective Coatings (SSPC-SP1).
Canvas Pipe Covering	All adhering debris shall be removed and indentations or other unsightly spots shall be smoothed out to give a uniform, even surface. Surfaces shall be brushed clean.
Gypsum Wallboard and Plastered Surfaces	Gypsum wallboard shall be prepared as recommended by the wallboard manufacturer. Plaster surfaces shall be dry. Scratches, cracks, holes and other defects shall be filled flush with adjoining surfaces by approved methods, sandpapered smooth, and brushed clean.
Concrete and Masonry Surfaces	Concrete and masonry shall be dried for a minimum of 28 days and then the dry concrete and masonry shall be brushed and washed to remove all loose dirt, dust, free lime and other deleterious substances by approved methods. Protruding fins and other adhering matter shall be removed or ground until a smooth, even finish is obtained. Concrete surfaces to be painted shall be acid etched or otherwise roughened as recommended by the manufacturer of the coating to be applied, to produce a slightly granular surface required for adherence of coating to the concrete, unless otherwise indicated.
PVC	All adhering debris shall be removed and surface shall be roughened using suitable sandpaper. Surfaces shall be dry and free from dirt, oil, grease etc.

1.16 Application

A. General: All painting and coatings shall be applied in accordance with the manufacturer's recommendations and approved submittals. A representative of the paint manufacturer shall inspect the surfaces to be painted and shall advise on the proper application. The paint manufacturer representative shall periodically be consulted regarding ambient temperature and humidity conditions.

B. Shop Painting: The following items shall be provided with shop coats of primer and finish coats as herein specified before exposure to the weather:

Metals:

a. Structural steel

Note: Consider using hot dip galvanizing at crevices or hard to reach places on steel structural.

b. Miscellaneous steel and wrought iron

c. Ornamental wrought and light iron

d. Iron castings

Machinery and Equipment:

e. Mechanical and electrical equipment

Pipe:

f. All piping except galvanized iron, stainless steel, aluminum, copper, brass and bronze piping.

C. Field Painting: All painting at the site of the project is hereby designated as field painting for those items that cannot be shop painted or are touched up due to minor damage to the painted surface.

Repair and Repainting: Field coatings shall not be applied until all marred surfaces have been repaired or repainted. Shop coated surfaces shall be thoroughly cleaned and retouched prior to the application of successive paint coats in the field.

Unpainted Materials: Do not paint or finish copper, bronze, chromium plate, nickel, stainless steel, aluminum (except ducts and conduit adjacent to finish painted surfaces), monel metal, lead, lead coated copper and brass, except as otherwise indicated.

Items to Receive Coating: All ferrous metals and insulated surfaces shall be provided with a protective coating. Interior surfaces, exposed masonry walls and concrete walls, floors and ceilings shall be provided with protective coatings as indicated on the drawings and specified.

Surface Condition: Only surfaces that are dry and free from dust, grease or other undesirable or interfering substances shall receive coatings. Coatings shall be as specified herein in the “Material Painting Schedule”.

Application: Finish coats shall be applied after all adjacent work has been completed. Successive coats shall have different shades or tints of color wherever possible. Colors shall be as selected and approved by the Engineer. Prime and successive finish coats shall be cleaned, sand papered, or otherwise treated before the next coat is applied, in accordance with the recommendations of the coating manufacturer, and as approved by the Engineer. All coats shall be inspected and approved by the Engineer, before application of any succeeding coats. All coats shall be applied to the dry film thickness (DFT) specified. Coatings shall be applied by skilled personnel under adequate illumination. All painted surfaces shall be left in a clean, orderly and acceptable condition.

Surface and Atmospheric Conditions: Paints shall not be applied when the surface temperature is less than 40 degrees F, when the relative humidity exceeds 85 percent, or when the surface to be painted is wet or damp, unless more stringent requirements are called for by the paint manufacturer.

D. Field Painting Operations: Surfaces to be given protective coating shall be thoroughly cleaned. Scratches and abrasions on equipment which has been shop coated shall be refinished and all surfaces to be field painted shall be approved by the Engineer before proceeding with painting. Painting shall be performed in a continuous and orderly operation to facilitate adequate inspection, however material subject to weathering or corrosion shall be given prime coats as quickly as practicable.

Method of Application: All paint material shall be applied by brush or roller. Spray painting will be permitted only with the specific approval of the Engineer. Surfaces which are so close together as to prevent the insertion of a standard size roller or brush shall be painted thoroughly with the prescribed number of coats by using special narrow rollers or brushes.

Adjacent Areas: Areas under and adjacent to painted surfaces shall be fully protected at all times. Dripped or spattered paint shall be promptly removed and any adjacent surfaces that have been damaged or discolored by overspray shall be repaired, refinished, and repainted.

Tinting: Successive coats of paint shall be tinted to make the various coats easily distinguishable. Undercoats of paint shall be tinted to the approximate shade of the final coat of paint. Final coats of paint shall not be applied until all other work has been completed, the dirt and rubbish removed and the surfaces suitably prepared. Paint to be applied shall be at room temperature.

Conditions for Application: Each coat of paint shall be given sufficient time to cure per the manufacturer's recommendation before application of the succeeding coat. Each succeeding coat shall be applied within the recoat time specified by the manufacturer; otherwise the painted surface shall be prepared per the manufacturer's recommendation before it is recoated. Exterior painting will not be allowed in dust laden air, during damp or threatening weather, or on moist or wet surfaces, or when the surface temperature is below 40 degrees F on a falling thermometer or under 50 degrees for catalyzed epoxy material; it will not be allowed in extreme heat or when metal is hot enough to cause the paint to blister and produce a porous film. Do not apply interior painting until the building is thoroughly dry. If the temperature in the interior of the building, in the opinion of the Engineer, is too low painting will be stopped until the building is heated. Proper ventilation and sufficient heat shall be maintained to permit the paint to dry. The building shall be maintained to be free from dust.

Remedial Work: Any paint found defective shall be removed. Touch-up and remedial painting shall be provided as directed and as required until completion and acceptance of final work. If damage to the painted surface is excessive, as determined by the Engineer, that item shall be rejected and shipped back, at Contractor's expense, to be properly recoated before it can be accepted.

Application: Each coat of paint shall be applied as a continuous film of uniform thickness, free of pinholes and blemishes, to the maximum extent practicable. Any thin spots or areas missed in the application shall be repainted and permitted to dry before the next coat is applied. An approved low voltage wet sponge "holiday" detector shall be used as directed by the Engineer. All paint shall be carefully applied to a smooth even coating without runs or sagging. Enamels shall be brushed with a smooth even flow. Each coat of paint shall be dry, not only on the surface, but throughout the thickness of the paint film, before the next coat is applied. Finished surfaces shall be uniform in gloss, finish, and color, and free from flash spots and brush marks. In all cases, the resultant paint film produced shall be satisfactory in all respects to the Engineer.

Thinning: If the paint material must be diluted for application by spray gun, the coating shall be built up to the same film thickness achieved with undiluted material (i.e., one gallon of paint as originally furnished must not cover a greater surface area when sprayed than when applied unthinned by brush). Where thinning is necessary, only the products of the manufacturer furnishing the paint shall be used for the particular purpose, and thinning shall be done with the manufacturer’s knowledge, in accordance with their printed instructions.

Thickness and Adhesion Testing: Dry film thickness of each coat shall be as specified herein. Dry film thickness will be checked by the Engineer or a representative with a magnetic gauge for ferrous metal in accordance with SSPC 2 or Tooke gauge destructive test for concrete. Film thickness of shop coats or other previously applied coating shall be checked by the Engineer or a representative and recorded before painting in order to determine thickness of field coats. Dry film thicknesses for concrete surfaces shall be determined by measuring with a wet-film gauge and by material consumption. Paint adhesion shall be tested by the peel method in accordance with ASTM D 3359.

Inaccessible Items: Exposed members which will be inaccessible after erection shall be painted and cleaned prior to erection.

Coverage: All surfaces to be painted shall be completely covered. When color on undercoats shows through the final coat of paint, surfaces shall be covered by additional coats until paint is of uniform color and appearance and coverage is complete.

Safe Atmosphere: The Contractor shall provide sufficient temporary ventilation during painting operations in enclosed areas to remove moisture and solvents, and to keep the atmosphere safe from harmful or dangerous fumes and dust levels for personnel.

E. Workmanship: Only skilled painters shall perform the work and specialists shall be employed where required. Finished surface shall not show brush marks or other irregularities. Top and bottom edges of doors shall be painted as required for the adjacent surfaces. Undercoats on hollow metal shall be thoroughly and uniformly sanded with No. 00 sandpaper, or equal abrasive, to remove all surface defects and provide a smooth, even surface.

F. Mixing: All paints and coatings shall be mixed in accordance with the manufacturer's instructions on the printed label. The Contractor shall provide galvanized iron pans of sufficient size to contain all mixing pails and mix all paints and ingredients therein.

G. Rates of Application: Paints shall be applied so as to give coverage per gallon not greater than that recommended by the manufacturer. Quantities of paint used for successive coats on the various parts of the work shall be recorded in a manner satisfactory to the Engineer.

H. Touch-Up of Shop-Primed and Finished Items: Touch-up of any and all damaged portions and imperfections in shop-primed and finished items shall be accomplished using the same paint as used for the shop prime and finish. Surface shall be prepared prior to touch-up by wire brushing and sanding to remove rust, scale and loose paint.

I. Aluminum and Incompatible Surfaces: Where aluminum surfaces come in contact with incompatible metals, lime, mortar, concrete or other masonry materials, one field coat of Group A paint as specified under Article 1.12 "Classification of Paints" in this Section shall be applied to the incompatible surfaces.

J. Concealed Surfaces: All wall surfaces which will be concealed by equipment shall be painted before equipment installation.

1.17 Field Testing / Quality Control

A. Not Used

1.18 Startup / Demonstration

A. Not Used

1.19 Adjusting / Protection / Cleanup

A. The Contractor shall touch up and restore any finish damaged. Paint or other finishes spilled, splashed or splattered shall be removed from all surfaces using care so as not to mar any surface or item being cleaned.

The Contractor shall rectify any failures or breakdowns, loosening of the paint or coatings within a year after acceptance of work, regardless of the paint systems used. This will require removal of the entire coating where failure occurs and repainting with the coating system previously specified. Patching will not be allowed.

SECTION 09 91 00 - PAINTING

APPURTENANT WORKS – IG/PC

MATERIAL PAINTING SCHEDULE																				
Materials and Conditions	**Paint Groups (A-N)**																			
	Tn: Tnemec, Cb: Carboline, SW: Sherwin Williams, IP: International paint, PPG: PPG/Amercoat																			
	Prime Coat					**Finish Coats**														
						1st					**2nd**					**3rd**				
Paint Manufacturer	**Tn**	**Cb**	**SW**	**IP**	**PPG**	**Tn**	**Cb**	**SW**	**IP**	**PPG**	**Tn**	**Cb**	**SW**	**IP**	**PPG**	**Tn**	**Cb**	**SW**	**IP**	**PPG**
Steel and Iron - Structural and Miscellaneous Uses:																				
Interior (Indoors) shop primed, field finished	B	A	A or D	A	A	B	A	D	A	B	A	A	D	A	B	A	A	D	A	--
Exterior (Outdoors) shop primed, field finished	B	A	A or D	B or A	A	B	A	A or D	B or A	B	A	A	D	A	B	C	C	C	C	--
Submerged, Buried or Continuously Wet Exposed to sewage, shop primed, field finished	B	A	A	B	A	B	A	A or B	B	B	D	D	B	D	D	D	D	B	D	--
Steel and Iron - Industrial Equipment (Exposed to wastewater):																				

SECTION 09 91 00 - PAINTING

APPURTENANT WORKS – IG/PC

MATERIAL PAINTING SCHEDULE																				
Materials and Conditions	**Paint Groups (A-N)**																			
	Tn: Tnemec, Cb: Carboline, SW: Sherwin Williams, IP: International paint, PPG: PPG/Amercoat																			
	Prime Coat					**Finish Coats**														
						1st					**2nd**					**3rd**				
Paint Manufacturer	**Tn**	**Cb**	**SW**	**IP**	**PPG**	**Tn**	**Cb**	**SW**	**IP**	**PPG**	**Tn**	**Cb**	**SW**	**IP**	**PPG**	**Tn**	**Cb**	**SW**	**IP**	**PPG**
Submerged, Buried or **continuously wet in wastewater**, completely shop coated inside and out, includes OEM factory finished items such as gates, valves, etc.	L Or M*	A Or K*	A or M*	D or L or K	B	L	A	B Or L	D	B	L	A	B Or L	D	B	--	--	B	D	--
Above grade, indoors, **exposed to waste water**, completely shop coated inside and out, includes OEM factory finished, items such as gates, valves etc.	L or M*	A	A or M*	D or L or K	A	L	A	B Or L	A or D	B	L	C	B Or L	A or D	B	--	--	B	A or D	--
Above grade, outdoors, **exposed to waste water**, completely shop coated inside and out, includes OEM factory finished, items such as gates, valves etc.	L or M*	A	A Or M*	D or L or K	A	L	A	B Or L	A or D	B	L	C	C	A or D	B	--	--	B	A or D	--

SECTION 09 91 00 - PAINTING

APPURTENANT WORKS – IG/PC

MATERIAL PAINTING SCHEDULE																				
Materials and Conditions	**Paint Groups (A-N)**																			
	Tn: Tnemec, Cb: Carboline, SW: Sherwin Williams, IP: International paint, PPG: PPG/Amercoat																			
	Prime Coat					**Finish Coats**														
						1st					**2nd**					**3rd**				
Paint Manufacturer	**Tn**	**Cb**	**SW**	**IP**	**PPG**	**Tn**	**Cb**	**SW**	**IP**	**PPG**	**Tn**	**Cb**	**SW**	**IP**	**PPG**	**Tn**	**Cb**	**SW**	**IP**	**PPG**
Inside of item immersed in sewage	L or M*	A or J	A Or M*	D or L or K	D Or E*	L	A or J	B or L	D	D or E	L	A or K	B or L	D	D or E	--	--	B	D	--
Ductile Iron or Steel Process Piping, submerged, Buried or constantly wet, **exposed to sewage**, H2S exposures, OEM factory finished.	M*	A or M*	A Or M*	D or K	E*	--	A	B	D or K	--	--	A	B	D or K	--	--	--	B	D or K	--
<u>Steel and Iron</u> - Industrial Equipment (Exposed to Potable water):																				
Shop primed, field finished	B	A	I or A	B	B	B	D	I	B	B	B	D	I	B	--	--	--	--	B	--
Exposed to Potable water (NSF) completely shop coated, inside and out, OEM factory finished items such as Gates, Valves etc.	B	A	I or A	B	A	B	D	I	B	A	B	D	I	B	A	--	--	--	--	--

SECTION 09 91 00 - PAINTING

APPURTENANT WORKS – IG/PC

MATERIAL PAINTING SCHEDULE																				
Materials and Conditions	**Paint Groups (A-N)**																			
	Tn: Tnemec, Cb: Carboline, SW: Sherwin Williams, IP: International paint, PPG: PPG/Amercoat																			
	Prime Coat					**Finish Coats**														
						1st					**2nd**					**3rd**				
Paint Manufacturer	**Tn**	**Cb**	**SW**	**IP**	**PPG**	**Tn**	**Cb**	**SW**	**IP**	**PPG**	**Tn**	**Cb**	**SW**	**IP**	**PPG**	**Tn**	**Cb**	**SW**	**IP**	**PPG**
Equipment above grade, indoors, **exposed to Potable water** (NSF), completely shop coated inside and out, OEM factory finished items such as Gates, Valves etc.	B	A	I or A	B	A	B	D	I	B	A	A	D	I	B	A	--	--	--	--	--
Equipment above grade, outdoors, **exposed to Potable water** (NSF), completely shop coated inside and out, OEM factory finished items such as Gates, Valves etc.	N*	A	I or A or N*	B	B	--	D	I	B	--	--	D	I	B	--	--	--	--	--	--
Ductile Iron or steel process piping **exposed to Potable Water** (shop finished) alternate	N*	A or N*	A or I Or N*	B	B	--	A	I	B	B	--	C	I	B	--	--	--	--	--	--
<u>MISCELLANEOUS USES</u>:																				
Piping concealed in Masonry	B	A	A	A	B	A	A	D	A	B	A	--	D	A	B	--	--	--	--	--

SECTION 09 91 00 - PAINTING
APPURTENANT WORKS – IG/PC

MATERIAL PAINTING SCHEDULE																				
Materials and Conditions	**Paint Groups (A-N)** Tn: Tnemec, Cb: Carboline, SW: Sherwin Williams, IP: International paint, PPG: PPG/Amercoat																			
	Prime Coat					**Finish Coats**														
						1st					**2nd**					**3rd**				
Paint Manufacturer	**Tn**	**Cb**	**SW**	**IP**	**PPG**	**Tn**	**Cb**	**SW**	**IP**	**PPG**	**Tn**	**Cb**	**SW**	**IP**	**PPG**	**Tn**	**Cb**	**SW**	**IP**	**PPG**
Piping wrapped in Insulation	A	A	A or D	A or B	B	A	A	D	A or B	B	A	--	D	A or B	B	--	--	--	--	--
Heated Metal (Air Main Piping): Submerged, Buried and Exposed	L or M*	D or E or M*	D or M*	D	D	--	E	D	D	D	--	A	D	D	--	--	A	D	D	--
Concrete Masonry: Interior	F	--	D	--	F	D or A	F	F	F	B	D	A	D	D	B	D	A	D	D	--
Concrete: Interior excluding floors	A	G	--	--	B	D or A	A	D	D	B	D	A	D	D	B	--	--	--	D	--
Concrete: Immersion, Waste Water	A	--	--	--	D	A	J	J	J or D	D	A	K	B or K	D	--	A	--	B	K or D	--

SECTION 09 91 00 - PAINTING

APPURTENANT WORKS – IG/PC

MATERIAL PAINTING SCHEDULE																				
Materials and Conditions	**Paint Groups (A-N)**																			
	Tn: Tnemec, Cb: Carboline, SW: Sherwin Williams, IP: International paint, PPG: PPG/Amercoat																			
	Prime Coat					**Finish Coats**														
						1st					**2nd**					**3rd**				
Paint Manufacturer	**Tn**	**Cb**	**SW**	**IP**	**PPG**	**Tn**	**Cb**	**SW**	**IP**	**PPG**	**Tn**	**Cb**	**SW**	**IP**	**PPG**	**Tn**	**Cb**	**SW**	**IP**	**PPG**
Pipe and Duct Insulation: Exposed	A	--	--	--	B	H	B	H	H	B	H	H	H	H	B	--	--	--	--	--
PVC (Interior)	A	--	--	--	B	A	B	D	A	B	A	A	D	A	--	--	--	--	--	--
PVC (Exterior)	A	--	--	--	B	A	B	D	A	C	A	C	C	A	--	C	--	C	C	--
Gypsum Wallboard and Plaster:	G	--	--	--	G	H	G	G	G	H	H	H	H	H	--	H	H	H	H	--
Nonferrous Metal and Galvanized steel: Interior	A	--	--	--	B	A	B	D	A	B	A	A	D	A	--	A	--	D	A	--
Nonferrous Metal and Galvanized Steel: Exterior	A	--	--	--	B	A	B	D	A	C	A	C	C	A	--	C	--	C	C	--
*Require only one coat.																				

NO TEXT ON THIS PAGE

26 05 00 BASIC ELECTRICAL REQUIREMENTS

GENERAL

1.01 Summary

A. The Contractor shall furnish all labor, materials, tools, and equipment, and perform all work and services necessary for, or incidental, to the furnishing and installation of all electrical work as shown on the Drawings, and as specified in accordance with the provisions of the Contract Documents and completely coordinate with the work of other trades involved in the general construction. Although such work is not specifically shown or specified, all supplementary or miscellaneous items, appurtenances, and devices incidental to or necessary for a sound, secure, and complete installation shall be furnished and installed as part of this work. The Contractor shall obtain approved Shop Drawings showing wiring diagrams, connection diagrams, roughing-in and hook up details for all equipment and comply therewith. All electrical work shall be complete and left in operating condition in accordance with the intent of the Drawings and the Specifications for the electrical work.

B. The Drawings show the general location of feeders, transformers, outlets, conduits, and circuit arrangements. Because of the small scale of the Drawings, it is not possible to indicate all of the details involved. The Contractor shall carefully investigate the structural and finish conditions affecting all of the Contractor's work and shall arrange such work accordingly; furnishing such fittings, junction boxes, and accessories as may be required to meet such conditions. The Contractor shall refer to the entire Drawing set to verify openings, special surfaces, and location of other equipment, or other special equipment prior to roughing-in for panels, switches, and other outlets. The Contractor shall verify all equipment dimensions to ensure that proposed equipment will fit properly in spaces indicated.

C. Where outlets are shown near identified equipment furnished by this or other Contractors, it is the intent of the Specifications and Drawings that the outlet be located at the equipment to be served. The Contractor shall coordinate the location of these outlets to be near the final location of the equipment served whether placed correctly or incorrectly on the Drawings.

1.02 Payment

A. There is no separate payment provision for this Section.

1.03 Related Sections

A. Section 40 61 13 – PMCS General Requirements

1.04 References

A. Conformance

All work, equipment and materials furnished shall conform with the existing rules, requirements and specifications of the following:

a. Insurance Rating Organization having jurisdiction

b. The serving electrical utility company

c. The currently adopted edition of the National Electrical Code (NEC)

d. The National Electric Manufacturers Association (NEMA)

e. The Institute of Electrical and Electronic Engineers (IEEE)

f. The Insulated Cable Engineers Association (ICEA)

g. The American Society of Testing Materials (ASTM)

h. The American National Standards Institute (ANSI)

i. The requirements of the Occupational Safety Hazards Act (OSHA)

j. The National Electrical Contractors Association (NECA) Standard of Installation

k. National Fire Protection Association (NFPA)

l. International Electrical Testing Association (NETA)

m. All other applicable Federal, State and local laws and/or ordinances.

All material and equipment shall bear the inspection labels of Underwriters Laboratories, Inc., if the material and equipment is of the class inspected by said laboratories.

B. Nonconformance

Any paragraph of requirements in these Specifications, or Drawings, deviating from the rules, requirements and Specifications of the above organizations shall be invalid and their (the above organizations) requirements shall hold precedent thereto. The Contractor shall be held responsible for adherence to all rules, requirements and specifications as set forth above. Any additional work or material necessary for adherence will not be allowed as an extra, but shall be included in the Bid. Ignorance of any rule, requirement, or Specification shall not be allowed as an excuse for nonconformity. Acceptance by the Engineer does not relieve the Contractor from the expense involved for the correction of any errors which may exist in the drawings submitted or in the satisfactory operation of any equipment.

C. Certification

Upon completion of the work, the Contractor shall obtain certificate(s) of inspection and approval from the National Board of Fire Underwriters or similar inspection organization having jurisdiction and shall deliver same to the City.

1.05 Description

A. The electrical scope of work for this project primarily includes, but is not limited to, the following:

Furnish and install low voltage motor control equipment including reduced voltage motor starters and variable frequency drives.

Furnish and install power panelboards, lighting panelboards, dry-type transformers, and other low voltage electrical power distribution equipment.

Furnish and install all aboveground raceway systems including conduit, fittings, boxes, supports, and other pertinent components.

Furnish and install all low and medium voltage wire and cable resulting in a complete and operable electrical system.

Other electrical work as specified herein and indicated on the Drawings.

B. All material and equipment must be the product of an established, reputable, and approved manufacturer; must be new and of first class construction; must be designed and guaranteed to perform the service required; and must bear the label of approval of the Underwriters Laboratories, Inc., where such approval is available for the product of the listed manufacturer as approved by the Engineer.

C. When a specified or indicated item has been superseded or is no longer available, the manufacturer's latest equivalent type or model of material or equipment as approved by the Engineer shall be furnished and installed at no additional cost to the City.

D. Where the Contractor's selection of equipment of specified manufacturers or additionally approved manufacturers requires changes or additions to the system design, the Contractor shall be responsible in all respects for the modifications to all system designs, subject to approval of the Engineer. The Contractor's bid shall include all costs for all work of the Contract for all trades made necessary by such changes, additions or modifications or resulting from any approved substitution.

E. Furnish and install all stands, racks, brackets, supports, and similar equipment required to properly serve the equipment which is furnished under this Contract, or equipment otherwise specified or indicated on the Drawings.

1.06 Quality Assurance

A. The grounding system maximum resistance shall not exceed 5 ohms under normally dry conditions. All structures and metal equipment containing electrical apparatus shall be connected to ground.

B. All grounding associated with the service feeders shall be in accordance with the requirements of the Electric Utility.

1.07 Submittals

A. In accordance with submittal procedures set forth by the Engineer and the submittal requirements of the individual specification sections, the Contractor shall obtain from the equipment manufacturer and submit the following:

Shop Drawings

Operation and Maintenance Manuals

Spare Parts List

Proposed Testing Methods and Reports of Certified Shop Tests

Reports of Certified Field Tests

Manufacturer’s Representative’s Certification

B. Submittals shall be sufficiently complete in detail to enable the Engineer to determine compliance with Contract requirements.

C. Submittals will be approved only to the extent of the information shown. Approval of an item of equipment shall not be construed to mean approval for components of that item for which the Contractor has provided no information.

1.08 Delivery, Storage, and Handling

A. The grounding equipment shall be delivered, stored and handled in accordance with Section 01 65 00 – Product Delivery Requirements, this Section, other applicable Specifications and the manufacturer's recommendations.

1.09 Spare Parts, Special Tools, and Supplies

A. Not Used

1.10 Special Warranty Provisions / Guarantee Periods

A. Unless otherwise specified in an individual specification section, all equipment and electrical construction materials furnished and installed under Division 26 shall be provided with a warranty.

PRODUCTS

1.11 Manufacturers

A. Unless otherwise indicated, the materials to be provided under this Specification shall be the products of manufacturers regularly engaged in the production of all such items and shall be the manufacturer's latest design. The products shall conform to the applicable standards of UL and NEMA, unless specified otherwise. International Electrotechnical Commission (IEC) standards are not recognized. Equipment designed, manufactured, and labeled in compliance with IEC standards is not acceptable.

B. All items of the same type or ratings shall be identical. This shall be further understood to include products with the accessories indicated.

C. All equipment and materials shall be new, unless indicated or specified otherwise.

D. The Contractor shall submit proof if requested by the Engineer that the materials, appliances, equipment, or devices that are provided under this Contract meet the requirements of Underwriters Laboratories, Inc., in regard to fire and casualty hazards. The label of or listing by the Underwriters Laboratories, Inc., will be accepted as conforming to this requirement.

E. Substitutions

Unless specifically noted otherwise, any reference in the Specifications or on the Drawings to any article, service, product, material, fixture, or item of equipment by name, make, or catalog number shall be interpreted as establishing the type, function, and standard of quality and shall not be construed as limiting competition.

1.12 Materials / Equipment

A. Materials arriving on the job site shall be in accordance with Section 01 65 00 – Product Delivery Requirements.

B. Concrete

The Contractor shall furnish all concrete required for the installation of all electrical work, Concrete shall be Class A unless otherwise specified. Concrete and reinforcing steel shall meet the appropriate requirements of the NYC DEP BWSO Standard Sewer and Water Main Specifications and other applicable Sections.

The Contractor shall provide concrete equipment pads for all free-standing electrical apparatus and equipment located on new or existing floors or slabs. The Contractor shall provide all necessary anchor bolts, channel iron sills, and other materials as required. The exact location and dimensions shall be coordinated for each piece of equipment well in advance of the scheduled placing of these pads. Equipment pads shall be 4 inches high unless otherwise indicated on the Drawings and shall conform to standard detail for equipment pads shown on the Contract Drawings. Equipment pads shall not have more than 3” excess concrete beyond the edges of the equipment.

The Contractor shall provide concrete foundations for all free-standing electrical apparatus and equipment located outdoors or where floors or slabs do not exist and/or are not or provided by others under this Contract. The Contractor shall provide all necessary anchor bolts, channel iron sills, and other materials as required. The location and dimensions shall be coordinated for each piece of equipment well in advance of the scheduled placing of the foundations. Equipment foundations shall be constructed as detailed on the Drawings or if not detailed on the Drawings shall be 6 inches thick minimum reinforced with #4 bars at 12-inch centers each way placed mid-depth. Concrete shall extend 6 inches minimum beyond the extreme of the equipment base and be placed on a compacted stone bed (#57 stone or ABC) 6 inches thick minimum

C. Rubber Insulation Matting

Rubber insulating matting shall be furnished and installed on the floor and in front of each piece of electrical equipment that is located indoors and installed under this Contract. Rubber insulating matting shall not be installed outdoors. The mat shall be long enough to cover the full length of the equipment. The mat shall be ¼-inch thick with beveled edges, canvas back, solid type with corrugations running the entire length of the mat. The matting shall meet OSHA requirements and the requirements of ASTM D-178 for Type 2, Class 2 insulating matting. Matting shall be 36 inches wide, minimum. However, matting width shall be no less than the NEC working clearance for the equipment with which it is associated.

Matting shall be provided for the following equipment:

a. PLC/RTU Enclosures

b. Motor Control Centers

c. Switchgear Assemblies

d. Switchboard Assemblies

e. Variable Frequency Drives

f. Reduced Voltage Starters

g. Unit Substations

h. Panelboards

i. Automatic Transfer Switches

j. Generator Output Circuit Breakers

k. Generator Control Panels

l. Fire Alarm Control Panels

1.13 Fabrication / Assembling / Finishes

A. Not Used

1.14 Source Quality Control / Shop Tests

A. Not Used

EXECUTION

1.15 Examination / Preparation

A. The Contractor shall examine the site and become familiar with conditions affecting the work as directed by the Engineer.

B. The Contractor is responsible for coordinating all electric utility equipment installations with the serving electric utility. The Contractor shall furnish and install all electric utility equipment required by the electric utility to be installed by the Contractor whether specifically shown on the Drawings or not.

C. The Contractor is responsible for ensuring all electric utility equipment and construction installed by the Contractor is furnished and installed in accordance with the electric utility's design specifications and requirements. The Contractor is fully responsible for coordinating the scope of work with the electric utility. Any additional required electric utility construction or equipment not specified herein or shown on the Drawings shall be supplied by the Contractor at no additional cost to the City.

1.16 Installation

A. Cutting and Patching

Coordination

a. The Work shall be coordinated between all trades to avoid delays and unnecessary cutting, channeling and drilling. Sleeves shall be placed in concrete for passage of conduit wherever possible.

Damage

b. The Contractor shall perform all chasing, channeling, drilling and patching necessary to the proper execution of the Contract. Any damage to the building, structure, or any equipment shall be repaired by qualified mechanics of the trades involved at the Contractor's expense. If, in the Engineer's judgment, the repair of damaged

equipment would not be satisfactory, then the Contractor shall replace damaged equipment at the Contractor's own expense.

Existing Equipment

c. Provide a suitable cover or plug for openings created in existing equipment as the result of work under this Contract. For example, provide round plugs in equipment enclosures where the removal of a conduit creates a hole and the enclosure. Covers and plugs shall maintain the NEMA rating of the equipment enclosure. Covers and plugs shall be watertight when installed in equipment located outdoors.

B. Excavation and Backfilling

The Contractor shall perform all excavation and backfill required for the installation of all electrical work. All excavation and backfilling shall be in complete accordance with the applicable requirements of NYC DEP BWSO Standard Sewer and Watermain Specifications and other applicable Sections.

C. Corrosion Protection

Wherever dissimilar metals, except conduit and conduit fittings, come into contact, the Contractor shall isolate these metals as required with neoprene washers, nine (9) mil polyethylene tape, or gaskets.

D. Schedules and Facility Operations

Since the equipment testing required herein shall require that certain pieces of equipment be taken out of service, all testing procedures and schedules must be submitted to the Engineer for review and approval one (1) month prior to any work beginning. When testing has been scheduled, the Engineer must be notified 48 hours prior to any work to allow time for load switching and/or alternation of equipment. In addition, all testing that requires temporary shutdown of facility equipment must be coordinated with the Engineer so as not to affect proper facility operations.

At the end of the workday, all equipment shall be back in place and ready for immediate use should a facility emergency arise. In addition, should an emergency condition occur during testing, at the request of the City, the equipment shall be placed back in service immediately and turned over to City personnel.

In the event of accidental shutdown of City equipment, the Contractor shall notify the Engineer personnel immediately to allow for an orderly restart of affected equipment.

1.17 Field Testing / Quality Control

A. Upon completion of the installation, the Contractor shall perform tests for operation, load (Phase) balance, overloads, and short circuits. Tests shall be made with and to the satisfaction of the Engineer.

B. The Contractor shall perform all field tests and shall provide all labor, equipment, and incidentals required for testing and shall pay for electric power required for the tests. All defective material and workmanship disclosed shall be corrected by the Contractor at no cost to the City. The Contractor shall show by demonstration in service that all

circuits and devices are in good operating condition. Test shall be such that each item of control equipment will function not less than five (5) times.

C. Refer to each individual specification section for detailed test requirements.

D. The Contractor shall complete the installation and field testing of the electrical installation at least two (2) weeks prior to the start-up and testing of all other equipment. During the period between the completion of electrical installation and the start-up and testing of all other equipment, the Contractor shall make all components of the Work available as it is completed for their use in performing Preliminary and Final Field Tests.

E. Before each test commences, the Contractor shall submit a detailed test procedure, and also provide test engineer resume, manpower and scheduling information for the approval by the Engineer. In addition, the Contractor shall furnish detailed test procedures for any of the equipment required as part of the field tests of other systems

F. Infrared Inspection:

Just prior to the final acceptance of a piece of equipment, the Contractor shall perform an infrared inspection to locate and correct all heating problems associated with electrical equipment terminations.

The infrared inspection shall apply to all new equipment and existing equipment that is in any way modified under this Contract. All heating problems detected with new equipment furnished and installed under the Scope of this Contract shall be corrected by the Contractor. All problems detected with portions of existing equipment modified under this Contract shall also be corrected by the Contractor.

Any issues detected with portions of existing equipment that were not modified under this Contract are not the responsibility of the Contractor. Despite the Contractor not being held responsible for these problems, the Contractor shall report them to the Engineer immediately for resolution.

The infrared inspection report shall include both digital and IR pictures positioned side by side. Both the digital and IR pictures shall be clear and high quality. Fuzzy, grainy, or poorly illuminated pictures are not acceptable. The IR picture shall be provided with a temperature scale beside it, and an indication of the hot spot temperature in each picture. Reports shall be furnished in a 3-ring binder, with all pages printed in full color, with equipment assemblies separated by tabs.

1.18 Startup / Demonstration

A. Unless otherwise specified in an individual specification section, all training for equipment furnished and installed under Section 01 79 05 – Equipment Start-Up and Training.

1.19 Adjusting / Protection / Cleanup

A. Protective Device Setting and Testing

The Contractor shall provide the services of a field services organization to adjust, set, calibrate and test all protective devices in the electrical system. The organization shall be a subsidiary of or have a franchise service agreement with the electrical equipment manufacturer. The qualifications of the organization and resumes of the technicians as well as all data forms to be used for the field testing shall be submitted in accordance with section 26 05 20.

The Contractor shall provide the services of a qualified, independent, third party testing company using N.E.T.A. certified technicians to adjust, set, calibrate and test all protective devices in the electrical system. The company shall not be a subsidiary of the electrical equipment manufacturer. The qualifications of the testing company and resumes of the technicians as well as all data forms to be used for the field testing shall be submitted.

All protective devices in the electrical equipment shall be set, adjusted, calibrated and tested in accordance with the manufacturers' recommendations, the coordination study, and best industry practice.

Proper operation of all equipment associated with the device under test and its compartment shall be verified, as well as complete resistance, continuity and polarity tests of power, protective and metering circuits. Any minor adjustments, repairs and/or lubrication necessary to achieve proper operation shall be considered part of this Contract.

All solid state trip devices shall be checked and tested for setting and operation using manufacturers recommended test devices and procedures.

Circuit breakers and/or contactors associated with the above devices shall be tested for trip and close functions with their protective device.

When completed, the Contractor shall provide a comprehensive report for all equipment tested indicating condition, readings, faults and/or deficiencies in same. Inoperative or defective equipment shall be brought immediately to the attention of the Engineer.

Prior to placing any equipment in service, correct operation of all protective devices associated with this equipment shall be demonstrated by field testing under simulated load conditions

B. Power System Studies

The Contractor shall provide Power System studies as a shop drawing submittal for review, in accordance with Specification Section 26 05 73 of the Interceptor Gate Buildings (IGB-Pages) Specifications. The Contractor shall provide protective device setting and testing services upon approval of the power system study shop drawing. The Contractor shall notify the Engineer six (6) weeks in advance of the scheduled date for the protective device setting and testing. The testing firm shall submit to the Engineer a tabulated listing of all protective devices requiring setting six (6) weeks prior to the setting and testing date. This table shall include the protective device manufacturer, model number, ampere rating (if applicable), instrument transformer ratios, and all other required information.

END OF SECTION

26 05 20 LOW-VOLTAGE WIRES, CABLES AND ACCESSORIES

GENERAL

1.01 Summary

A. Requirements for providing low-voltage electric wires, cables and accessories.

Low-voltage electric wires, cables, and accessories shall be provided in accordance with the requirements specified under this Section, the Specifications and the Contract Drawings.

B. Low-voltage electric wires and cables to be provided shall include all accessories.

1.02 Payment

A. There is no separate payment provision for this Section.

1.03 Related Sections

A. All Common Works specification sections (Division 01) apply to this Section.

1.04 References

A. Definitions

Low-voltage as used in this Section and the Specifications shall mean all equipment, conductors, insulation systems and accessories intended for operation within the 600 Volt Class.

Low-voltage wires and cables shall mean all insulated electric wires and cables intended for use for power, lighting, control, instrumentation, communication, security and alarm circuits.

Low-voltage wires and cable accessories shall mean all devices and items intended to provide mechanical protection, terminate, connect, splice, insulate, tag and manage low-voltage wires and cables.

Cable is an assembly of insulated wires combined with fillers and separators in an enclosing jacket of insulating material.

All references to the Electric Utility or Utility shall mean Consolidated Edison Company or the Local Electric Utility having jurisdiction.

B. Reference Standards

Low-voltage wires and cables shall comply with the latest applicable provisions and recommendations of the following:

ANSI/ICEA S-95-658/

NEMA WC70 - Power Cables Rated 2000 V or Less for the Distribution of Electrical Energy.

ASTM B8 - Specification for Concentric-Lay-Stranded Copper Conductors, Hard, Medium-Hard, or Soft.

ASTM D69 - Standard Test Methods for Friction Tape

ASTM D2301 - Standard Specification for Vinyl Chloride Plastic Pressure-Sensitive Electrical Insulating Tape.

ASTM D3005 - Standard Specification for Low-Temperature Resistant Vinyl Chloride Plastic Pressure-Sensitive Electrical Insulating Tape.

ICEA S-58-679 - Standard for Control, Instrumentation and Thermocouple Extension Conductor Identification.

IEEE C2 - National Electrical Safety Code.

IEEE 1210 - Standard Tests for Determining Compatibility of Cable-Pulling Lubricants with Wire and Cable.

NEMA WC 26/
EEMAC 201 - Binational Wire and Cable Packing Standard

NETA ATS - NETA Acceptance Testing Specifications.

NFPA 72 - National Fire Alarm Code

NYCEC - NYC Electrical Code

NYCCC - NYC Construction Code

UL Standard No. 44 - Thermoset-Insulated Wires and Cables.

UL Standard No. 83 - Thermoplastic-Insulated Wires and Cables.

UL Standard 486A-486B - Wire Connectors

C. Not Used

1.05 Description

A. Not Used

1.06 Quality Assurance

A. General:

All low-voltage wires, cables and accessories shall be made by an approved manufacturer, and in their construction shall be employed the most improved commercial materials and processes of manufacture.

Only low-voltage wires, cables and accessories manufactured under high standards of production and meeting the approval of the Engineer shall be used.

Friction tape shall be in accordance with ASTM. D69.

All low-voltage wire and cable splicing and terminations shall be done by experienced cable splicers who have worked with similar wire and cable for a period of at least five (5) years, using materials and procedures recommended by the wire and cable manufacturer. All splicing and terminations of low-voltage wire and cable shall be in accordance with the instructions of the low-voltage wire and cable manufacturer.

The low-voltage wire and cable manufacturer shall use a shop test facility that has recently calibrated testing apparatus and qualified, experienced technicians, for all shop tests. Calibration of testing apparatus shall be within one year.

All test equipment and instrument calibration shall be in accordance with the latest edition of the accuracy standard of the U.S. National Institute of Standards and Technology and the NETA acceptance testing specification.

The mineral-insulated metal sheath cable installation shall be performed by experienced mineral-insulated metal sheath cable installers who shall have been regularly engaged in the installation of mineral-insulated metal sheath cable for a minimum of the past three (3) years.

The Contractor shall retain the services of the mineral-insulated metal sheath cable manufacturer's representative to certify the cable installation is in accordance with the manufacturer's requirements.

Field testing of low-voltage wires and cables shall be in accordance with the requirements specified under this Section.

The Contractor shall retain the services of an independent testing firm who shall perform acceptance testing on the low-voltage wire and cable installation.

a. The testing firm shall have experience in the inspection and testing of wires and cables of the type specified and shall be a member company of NETA.

b. Provide proof of membership or demonstrate that the standards and experience required for membership are possessed, all to the satisfaction of the Engineer.

c. The testing shall be performed in accordance with the requirements specified under this Section.

1.07 Submittals

A. Contractor shall submit Shop Drawings and material specifications for the approval of the Engineer. Submittals shall include, but not be limited to:

A list of proposed manufacturers shall be submitted with the products they produce proposed for the contract.

Manufacturer's Literature, specifications and engineering data for low-voltage wires, cables and accessories including but not limited to:

a. Manufacturer and type of wire or cable.

b. Minimum insulation resistance in megaohms per 1,000 ft. at 20 degrees C.

c. Material, number and size of strands composing each conductor.

d. Conductor insulation thickness in inches with material and voltage rating.

e. Jacket thickness in inches.

f. Average outside diameter of bare conductor.

g. Average outside diameter of finished wire or cable and jacket material.

h. Weight per 1,000 ft. of finished wire or cable.

i. Minimum bending radius, in inches.

j. Minimum pulling temperatures at which cable may be pulled without damage.

k. Maximum pulling tensions which may be applied to the cable without damage.

l. Literature identifying the methods and materials which Contractor proposes to use to make splices and terminations. Submittal shall consist of manufacturer's literature evidencing compatibility of the conductor insulation and jacket of the wire or cable with the splicing or terminating materials and methods which Contractor proposes to use.

m. Manufacturer recommended pulling lubricants.

n. Qualifications of splicing and termination personnel.

Description of shop and field testing methods, procedures and apparatus with calibration dates shall be submitted. Testing methods and procedures shall be submitted at least 45 days in advance prior to conformation of witness testing dates and actual testing.

Qualifications of proposed testing firm to perform acceptance testing shall be submitted. Submit firm experience records at least 45 days in advance to actual testing, five recent references with phone numbers shall be submitted.

Qualifications of proposed mineral-insulated metal sheath cable installer shall be submitted. Submit installer experience records with five recent completed installations with names and phone numbers.

Certification from the mineral-insulated metal sheath cable manufacturer's representative that the cable installation is in accordance with the manufacturer's requirements.

B. Reports:

Shop and field test reports shall be submitted.

Acceptance testing report shall be submitted.

1.08 Delivery, Storage, and Handling

A. Low-voltage wires, and cables shall be delivered, stored and handled in accordance with the Specifications and the manufacturer's instructions.

B. Deliver low-voltage cables on factory reels conforming to NEMA WC26. Each end of each length of cable shall be hermetically sealed with the manufacturer’s end caps and securely attached to the reel. Reels with unsealed ends will be rejected.

C. Inspect wire and cable protective coverings for evidence of damage during shipment.

D. Accomplish unloading without contacting cable surface or protective coverings or dropping cable reels from the delivering vehicle to the ground.

E. Store wires and cables on reels on elevated hard surfaces in a clean dry locations away from construction equipment, falling objects, sources high heat and chemicals or petroleum products.

F. Seal cut cable ends using properly sized heat shrink cap to prevent moisture ingress and wicking into the cable interior.

1.09 Spare Parts, Special Tools, and Supplies

A. Not Used

1.10 Special Warranty Provisions / Guarantee Periods

A. Not Used

PRODUCTS

1.11 Manufacturers

A. Low-voltage single conductor wires for installation in conduit shall be as manufactured by:

Southwire, Carrollton, GA;

General Cable, Highland Heights, KY;

Okonite Company, New York, NY;

Or approved equal.

B. Low-voltage cable shall be as manufactured by:

Southwire, Carrollton, GA;

General Cable, Highland Heights, KY;

Belden;

Okonite Company, New York, NY;

Or approved equal.

C. Compression connectors ring tongue type shall be manufactured by:

Ideal Industries, Sycamore, IL;

Thomas and Betts, Memphis, TN;

Burndy, Manchester, NH;

Or approved equal.

D. The mineral-insulated metal sheath cable shall be as manufactured by:

a. Pentair Pyrotenax, Houston, TX;

b. AFC Cable Systems, New Bedford, MA;

c. Or approved equal.

E. Compression splices shall be manufactured by:

Ideal Industries, Sycamore, IL;

Thomas and Betts, Memphis, TN;

Burndy, Manchester, NH;

Or approved equal.

F. Waterproof compression splices shall be manufactured by

Ideal Industries, Sycamore, IL;

Thomas and Betts, Memphis, TN;

Burndy, Manchester, NH;

Or approved equal.

G. Spring connector splices shall be manufactured by:

Ideal Industries, Sycamore, IL;

Thomas and Betts, Memphis, TN;

Burndy, Manchester, NH;

Or approved equal.

H. Markers shall be as manufactured by:

Ideal Industries, Sycamore, IL;

Thomas and Betts, Memphis, TN;

Brady, Milwaukee, WI;

Or approved equal.

I. Pulling lubricant shall be as manufactured by:

American Polywater Corporation, Stillwater MN;

3M – St. Paul, MN;

Ideal Industries, Sycamore, IL;

Or approved equal.

1.12 Materials / Equipment

A. Low-voltage wire and cable

Low-voltage wire and cable shall be used for all power, lighting, control instrumentation, alarm and security system circuits. The size and quantity of low-voltage wires and cables shall be as indicated in the conduit and cable schedule. The conductor jacket shall be in accordance with color identification requirements specified under this Section.

Low-voltage single conductor wires for installation in conduit shall be in accordance with the following:

a. Conductors shall be stranded, copper, single conductor wire conforming to ASTM B8, and B33 No. 12 AWG minimum size.

b. Conductor insulation shall be flame-retardant, moisture and heat resistant thermoset rated 90 degrees C in dry locations and 75 degrees C in wet locations and listed by UL as type XHHW-2 or RHW.

c. XHHW-2 shall be used for all indoor circuits and RHW for all underground and outdoor circuits.

Low-voltage cable for installation in conduit shall be in accordance with the following:

d. Conductors shall be stranded, copper conforming to ASTM B8 and B33, No. 12 AWG minimum size.

e. Conductor insulation shall be moisture and flame resistant cross-linked polyethylene rated 90 degrees C in wet and dry locations and listed by UL as type XHHW-2.

f. Cable conductors shall be assembled together with flame and moisture resistant filters and tape to make round.

g. Cable shall include an overall protective jacket of polyethylene compound, 45 mils minimum thickness.

Instrumentation cable shall in addition comply with the following:

h. Conductors shall No 16 AWG minimum size

i. All conductors shall be polyethylene insulated and twisted in pairs with aluminum-mylar shield overlap.

j. Cable jacket shall be low halogen

Communication cable shall in addition comply with the following:

k. Conductors shall be No 24 AWG minimum size.

l. Conductor twist and shielding shall be as shown on the Contract Drawings or as stated in the Detailed Specifications.

m. Cable jacket shall be low halogen

Fire Alarm cable shall in addition comply with the following:

n. Conductors shall 18 AWG minimum size

o. Cables shall be UL listed for the intended service

p. Cables intended for use in the installation shall be approved for the intended use by the New York City Building Department, Material and Equipment Acceptance Division.

Security system cable shall in addition comply with the following:

q. Conductors shall be No 22, AWG minimum size.

r. Conductor twist and shielding shall be as shown on the Contract Drawings or as stated in the Detailed Specifications.

s. Coaxial cable shall be as shown on the Contract Drawings or as stated in the Detailed Specifications.

Mineral-insulated metal sheath cable shall be used for the fire pump circuits. The mineral-insulated metal sheath cable shall be in accordance with the following:

t. The mineral-insulated metal sheath cable shall be NYCEC, type MI. The cable assembly shall be UL listed including support for a 2 hour fire rating.

u. Conductors shall be solid copper conforming to ASTM B5.

v. Cable insulation shall be magnesium oxide mineral rated 600 volts, 90 degrees C. The cable shall include a metal-sheath consisting of seamless soft drawn copper.

w. The cable shall be provided with all fittings and hardware necessary for proper installation.

B. Low-voltage wire and cable accessories

Cable connectors shall be provided for terminating low-voltage wire and cable. Connectors shall be solder less type and properly sized to fit fastening device and wire size. Connectors shall be in accordance with the following:

a. For wire sizes up to and including No. 6 AWG, compression type with UL 486A listing shall be used. All cable terminations for conductors No. 10 AWG and smaller shall be terminated using UL listed ring tongue type, nylon insulated connectors, at each terminal board.

b. For wire sizes No. 4 AWG and above, either compression type or bolted type with tin-plated contact faces shall be used.

c. For wire sizes No. 250 kcmil and larger, connectors with at least 2 cable clamping elements or compression indents and provision for at least 2 bolts for joining to apparatus terminal shall be used.

Splicing for low-voltage wire and cable shall be performed when terminals are not provided. Splicing shall be in accordance with the following:

d. For wire sizes No. 8 AWG and larger, splices shall be made up with compression type copper splice fittings with UL 486A listing. Splices shall be taped and covered with materials recommended by the cable manufacturers, to provide insulation equal to that on the conductors.

e. For wire sizes No. 10 AWG and smaller, splices shall be made up with preinsulated, spring connectors. Connectors shall be flame retardant with UL listing. Spring connectors shall be Twister type.

f. For wet locations, splices shall be waterproofed. Compression type splices shall be waterproofed by a sealant-filled, thick wall, heat shrinkable, thermosetting tubing or by pouring a thermosetting resin into a mold that surrounds the joined conductor. Waterproof

compression splices shall be UL listed, heavy wall type. Spring connector splices shall be UL listed and waterproofed with a sealant-filler. Spring connectors shall be Twister DB type.

Compression connectors shall be ring tongue type.

Cable markers shall be provided for the identification of low-voltage wire and cable. Markers shall be in accordance with the following:

g. Markers shall be vinyl type, moisture, heat and abrasion resistant with adhesive back. Cable identification shall be clearly marked.

Low-voltage wire and cable pulling lubricant shall be used to reduce wire and cable tension and side wall pressure and aid in minimizing damage during low-voltage wire and cable installation. Pulling lubricant shall be in accordance with the following:

h. UL Listed, compatible with the wire insulation or cable jacket, the raceway involved and acceptable to the wire and cable manufacturer. When wire and cable manufacturer shall be provided.

i. Pulling lubricant shall be water based, with a 0.17 average coefficient of friction and a temperature range of 20 to 120 degrees F.

j. Pulling lubricant shall confirm to IEEE 1210

k. Pulling lubricant shall not support combustion.

l. Pulling lubricant shall not cause residue to cement insulation or jackets to the inside of conduit or ducts.

1.13 Fabrication / Assembling / Finishes

A. Not Used

1.14 Source Quality Control / Shop Tests

A. Certified Shop Tests:

Shop testing shall be performed on the low-voltage wire and cable at the manufacturer's plant prior to shipment. Shop test shall be in accordance with the latest revisions of ICEA and UL and shall demonstrate that the wire and cable tested conforms to the requirements specified.

The Contractor shall provide a shop test report. The report shall identify the tests performed and the results obtained.

All low-voltage wire and cable shall be shop tested in accordance with the requirements of the Detailed Specifications.

B. Witnessed Shop Tests:

The Contractor shall perform witnessed shop tests in accordance with the Detailed Specifications.

The City shall have access during working hours for inspection purposes to all parts of the works where material and cable are being manufactured, and all reasonable inspection and testing facilities shall be provided to them without increase in price. The City may request that dielectric strength tests and measurements be made to verify the cable data furnished by the Contractor. For this purpose the Contractor shall furnish without increase in price, a length of cable, not to

exceed 3 feet for each size to be cut from one or more reels as directed by the Engineer. Each sample shall be marked with a tag bearing full description of cable insulation and number of reel from which it is cut.

EXECUTION

1.15 Examination / Preparation

A. All low-voltage wires and cables shall be installed within the raceways as shown on the Contract Drawings. They shall be carefully handled so as to avoid twists or kinks in the conductors or damage to the insulation.

B. The Contractor shall ensure that the manufacturer's recommended cable bending radii and pulling are not exceeded and that the number of conductors permitted in a conduit are in accordance with the latest applicable section of the New York City Electrical Code.

C. No splices shall be permitted between terminals except at approved junction or terminal boxes. Boxes shall be provided as shown on the Contract Drawings or as required by Code for the pull lengths. No more than two terminations shall be made at each terminal point. Cable and wire runs shall be looped through pull boxes without cutting and splicing where possible. All splices below grade, in manholes, hand holes and wet locations shall be waterproofed.

D. No splicing of instrument wiring shall be permitted. Instrument wiring shall be extended by use of field termination boxes employing labeled terminal strips. Shield continuity shall be maintained. Ultimate shield termination (ground) shall be at one end only.

E. The mineral-insulated metal sheath cable manufacturer's representative shall review the cable installation to certify that the cables are installed in accordance with the manufacturer's requirements.

1.16 Installation

A. Wire and Cables

Cables shall be installed complete with proper terminations at both ends. For each motor circuit, Contractor shall ensure proper phasing, phase sequence and motor rotation.

Wire and cable contained within a single conduit shall be pulled simultaneously using insulating pulling compounds containing no mineral oil.

Pulling tension on wires and cables shall be continuously monitored using a calibrated Dynamometer type device, having a calibration label within six months of its use.

Cables shall be installed with maximum slack at all terminal points, boxes, handholes and manholes.

Low-voltage cables located within manholes, handholes and boxes shall be wrapped with fireproofing tape for their entire length on an individual cable basis.

a. Tape shall be 30 mills thick of self-extinguishing material which will not support combustion.

b. Tape shall not deteriorate when subjected to water, salt, sewage or fungus and shall be secured with glass cloth tape.

c. Low-voltage cables shall be fireproofed in accordance with the cable manufacturer's recommendations and then covered with tape extending at least one inch into any duct.

B. Conductor Identification

Each conductor shall be labeled at each termination point and all splice locations. Carry individual conductor or circuit identification throughout, with circuit numbers or other identification stamped on terminal boards when provided or the cable so it is visible around the cable's circumference.

Each conductor shall be identified in junction boxes, cabinets, and terminal boxes. Where no termination is made, use a plastic-coated, self-adhesive, wire marker. Where termination is made, use a plastic, pre-printed sleeve wire marker. Paper, self-adhesive wire markers shall not be used.

In manholes and handholes, each power conductor shall be identified by a laminated plastic tag located so that it can be seen from center of manhole without moving adjoining wires. Bundle and mark control wires as listed in conduit and cable schedule.

Multi-conductor control cables shall be color coded in accordance with ICEA S-58-679, Method 1, Table E

The following identification scheme shall be used for all low-voltage power circuits:

	Colors				
Voltage	**Neutral Conductor**	**Phase A Conductor**	**Phase B Conductor**	**Phase C Conductor**	**Ground Conductor**
208/120V	White	Black	Red	Light Blue	Green
240/120V	White-Gray Strip	Black-Blue Strip	RED-BLUE STRIP	None	Green
480/277V	Gray	Brown	Orange	Yellow	Green

1.17 Field Testing / Quality Control

A. After installation, all low-voltage wire and cable shall be field tested. The field tests shall be performed by the Contractor who shall furnish all testing equipment. The field tests shall be witnessed by the Engineer and certified by the Contractor. The Contractor shall provide a report identifying the tests performed and the results obtained.

B. Each electrical circuit shall be tested after permanent wires and cables are in place to demonstrate that the circuit and equipment are connected properly and will perform satisfactorily, as required, as intended, and that they are free from improper grounds and short circuits. The tests shall consist of the following:

Low-voltage wire and cable mechanical connections shall be individually tested after installation and before they are put in service with a calibrated torque wrench. Values shall be in accordance with manufacturer's recommendations.

Low-voltage wires and cables shall be individually tested for continuity between the required termination points for each ungrounded and grounded conductor. Test wire and cable after installation and before first energization or before they are put in service with an approved continuity tester. Test results shall be as recommended by the wire and cable manufacturer or in accordance with NETA ATS, NEMA, ICEA Standards.

Low-voltage wires and cables shall be individually tested for insulation resistance between ungrounded and grounded conductors, and from each ungrounded and grounded conductor to ground. Test wire and cable after installation and before first energization or before they are put in service with an approved insulation resistance tester, for one minute at a voltage rating recommended by the cable manufacturer or in accordance with NETA ATS, NEMA, and ICEA Standards.

The insulation resistance for any given conductor shall not be less than the value recommended by the cable manufacturer or in accordance with NETA ATS, NEMA and ICEA Standards. Any cable not meeting the recommended value or which fails when tested under full load conditions shall be replaced with a new cable for the full length.

Shielded instrumentation cable shields shall be tested with an ohmmeter for continuity along the full length of the cable and for shield continuity to ground.

Connect Shielded instrumentation cables shall be connected to a calibrated 4-20 milliamp DC signal transmitter and receiver. Test at 4, 12, and 20 milliamp transmitter settings.

1.18 Startup / Demonstration

A. Not Used

1.19 Adjusting / Protection / Cleanup

A. Not Used

END OF SECTION

NO TEXT ON THIS PAGE

26 05 33 RACEWAYS AND BOXES FOR ELECTRICAL SYSTEMS

GENERAL

1.01 Summary

A. Requirements for providing conduit system.

The conduit system shall be provided in accordance with the requirements specified under this Section, the Specifications and the Contract Drawings.

The conduit system required shall be provided with all rigid and flexible conduits, boxes, fittings, supports, hangers and inserts and other conduit accessories as required for the installation of the electric wire and cable.

1.02 Payment

A. There is no separate payment provision for this Section.

1.03 Related Sections

A. Section 05 05 23.02 - Miscellaneous Metal Fastening.

B. Section 09 91 00 - Painting.

C. Section 40 05 07 - Hangers and Supports for Process Piping.

1.04 References

A. Definitions

Conduit System: Shall mean a complete installation comprising all rigid conduit and flexible connections, boxes, fittings, supports, hangers, inserts and other conduit accessories as required for the installation of electric wires and cables.

Conduit Accessories: Shall mean all fittings required to ensure a complete conduit system installation. Conduit accessories shall include, but is not limited to, expansion, deflection, seal and drain fittings, hubs, bushings, duct seal, tags, markers, thruwall seals and bushings.

B. References

Electric conduit system shall comply with the latest applicable provisions and recommendations of the following:

NYCEC - New York City Electrical.

IEEE 142 - Recommended Practice for Grounding of Industrial and Commercial Power Systems.

UL 6 - Rigid Metal Electrical Conduit -Steel.

UL 50 - Standard for Enclosures for Electrical Equipment.

UL 360 - Standard for Liquid-Tight Flexible Metal Conduit.

UL 514A - Metallic Outlet Boxes.

UL 514B - Conduit, Tubing and Cable Fittings.

ANSI C80.1 - Electric Rigid Steel Conduit.

ASTM D870 - Standard Practice for Testing Water Resistance of Coatings Using Water Immersion.

ASTM D1735 - Standard Practice for Testing Water Resistance of Coatings Using Water Fog Apparatus.

NEMA RN-1 - PVC Externally Coated Galvanized Rigid Steel Conduit and Intermediate Metal Conduit.

1.05 Description

A. Not Used

1.06 Quality Assurance

A. Not Used

1.07 Submittals

A. Contractor shall submit Shop Drawings and material specifications for the approval of the Engineer. Submittals shall include, but not be limited to:

A list of proposed manufacturers with the products they produce proposed for the contract.

Manufacturer's catalog cuts for the conduit, boxes, fittings and supports proposed for use.

Construction details of conduit racks and other conduit support systems with seismic restraint details and calculations signed by a licensed engineer.

Scaled Shop Drawings showing proposed routing of all conduits, inclusive of conduits embedded in structural concrete and conduits directly buried in earth.

Scaled Shop Drawings showing locations of pull and junction boxes and all penetrations in walls and floor slabs.

Field test report.

1.08 Delivery, Storage, and Handling

A. Electric conduit system shall be delivered, stored and handled in accordance with the Specifications, the manufacturer's instructions and the following:

Conduit shall be delivered to the work in standard bundles having each length suitably marked with the manufacturer's name or trademark and bearing the label of the Underwriters' Laboratories, Incorporated inspection service.

1.09 Spare Parts, Special Tools, and Supplies

A. Not Used

1.10 Special Warranty Provisions / Guarantee Periods

A. Not Used

PRODUCTS

1.11 Manufacturers

A. PVC coated rigid steel conduit shall be as manufactured by:

Robroy Industries, Gilmer, TX;

OCAL by Thomas & Betts, Memphis, TN;

Or approved equal.

B. Stainless steel conduit shall be as manufactured by:

Calbrite Stainless Steel Conduit Systems, Hobart, IN

Gibson Stainless and Specialty, Greensburg, PA

Or approved equal.

C. Hangers, Supports and Inserts shall be as manufactured by:

B-Line, Highland, IL;

Kindorf, Harahan, LA;

Or approved equal.

D. Flexible conduit shall be as manufactured by:

Anaconda American Brass Company, Rolling Meadows, IL;

Electric-Flex Company, Roselle, IL;

Or approved equal.

E. Hazardous area flexible conduit shall be as manufactured by:

Crouse Hinds Company, Syracuse, NY;

Appleton Electric Company, Rosemont, IL;

Or approved equal.

F. Unions in hazardous locations shall be as manufactured by:

Crouse-Hinds Syracuse, NY;

Or approved equal.

G. Unions in non-hazardous areas shall be as manufactured by:

Thomas & Betts, Memphis, TN;

Or approved equal.

H. Expansion and deflection fittings shall be as manufactured by:

Crouse-Hinds, Syracuse, NY;

Appleton Electric, Rosemont, IL;

Or approved equal.

I. Sealing fittings shall be as manufactured by:

Crouse-Hinds, Syracuse, NY;

Appleton Electric, Rosemont, IL;

Or approved equal.

J. Drain fittings shall be as manufactured by:

Crouse-Hinds, Syracuse, NY;

Appleton Electric, Rosemont, IL;

Or approved equal.

K. Conduit hubs shall be as manufactured by:

O-Z/Gedney Rosemont, IL;

Thomas and Betts, Memphis, TN;

Or approved equal.

L. Conduit bushings and locknuts shall be as manufactured by:

a. O-Z/Gedney, Rosemont, IL;

b. Thomas and Betts, Memphis, TN;

c. Or approved equal.

M. Duct seal shall be as manufactured by:

American Polywater Corp, Stillwater, MN;

O-Z/Gedney, Rosemont, IL;

Ideal Industries, Sycamore, IL;

Or approved equal.

N. Thruwall seals shall be as manufactured by:

O-Z/Gedney Rosemont, IL;

Or approved equal.

O. Floor seals shall be as manufactured by:

O-Z/Gedney, Rosemont, IL.;

Or approved equal.

P. Sealing bushings shall be as manufactured by:

O-Z/Gedney, Rosemont, IL;

Or approved equal.

Q. Fire stop fittings shall be as manufactured by:

O-Z/Gedney, Rosemont, IL;

Or approved equal.

R. Thru-wall barriers shall be as manufactured by:

Crouse-Hinds, Syracuse, NY;

Or approved equal.

S. Conduit tags shall be as manufactured by:

Seton Nameplate Corporation, Branford, CT;

Or approved equal.

T. Conduit markers shall be as manufactured by:

Thomas and Betts, Memphis, TN;

Or approved equal.

U. Terminal blocks shall be as manufactured by:

Allen-Bradley Company, Milwaukee, WI;

General Electric Company, Fairfield, CT;

Or approved equal.

V. Junction Boxes shall be as manufactured by:

Carlon, Brookfield, WI,

Kraloy, London, ON,

Or approved equal.

1.12 Materials / Equipment

A. Rigid Steel Conduit

The Contractor shall provide rigid steel conduit. All steel conduit shall comply with the requirements of ANSI C80.1, and UL 6.

Both the inside and outside surfaces of the rigid steel conduit shall be protected against corrosion by a coating of zinc applied by the hot-dip galvanizing process.

Conduits, elbows and couplings shall be rigid, heavy wall, mild steel, hot dip galvanized. Conduits, elbows and couplings shall have a smooth interior with tapered threads and carefully reamed ends. Conduit size shall be 3/4-inch minimum and shall conform to UL 6.

Conduits, elbows and couplings shall include a PVC coating for all areas..

PVC coating of conduit shall be factory applied and shall include a smooth 2 mil thick urethane interior coating and 40 mil thick polyvinyl chloride exterior coating. PVC coated conduit shall conform to NEMA RN-1, ASTM D870, ASTM D1735 and UL 6. The exterior PVC coating color shall be gray and listed UL DYJC. The threads of conduits that have been cut in the field to size shall have the same PVC coating applied.

B. Hangers, Supports and Inserts

The Contractor shall provide hangers, supports and inserts for support of the electric conduit system. The supports shall securely attach the electric conduit system to the channel and structure.

The electric conduit system shall be designed, constructed and installed suitable for earthquake regulations in accordance with the seismic requirements of the New York City Building Code and the Uniform Building Code for Zone 2A application.

Transverse and longitudinal bracing shall be provided as required to brace the electric conduit for the seismic requirements specified.

All drilled in type concrete inserts shall be expansion shields or anchors conforming to Section 05 05 23.02 – Miscellaneous Metal Fastenings and 40 05 07 - Hangers and Supports for Process Piping. In corrosive locations, concrete inserts shall be 316 stainless steel.

Hangers and supports shall be in accordance with the requirements of Section 40 05 07 - Hangers and Supports for Process Piping except beam clamps, hanger rods and hardware shall be steel with electro-plated zinc finish. This shall also include bolts, nuts and washers. In corrosive locations, hangers and support hardware shall be type 316 stainless steel or factory applied 40 mil thick PVC coated.

C. Flexible Metallic Conduit

The Contractor shall provide flexible metallic conduit where required to permit movement of connected devices and where it is impracticable to complete runs with rigid conduit subject to the limitations imposed by the NYCEC.

Flexible conduit used indoor in non-hazardous dry dusty areas shall be non-liquid-tight, with a steel core.

Flexible conduit used outdoors and in non-hazardous, wet and corrosive areas shall be UL Listed and include a hot dipped galvanized steel core with a liquid-tight, polyvinyl chloride cover and shall include a built-in copper ground for sizes 3/4-inch through 1-1/4 inch.

For hazardous areas flexible conduit shall include a brass inner core with a bronze outer braid and protective neoprene plastic coating. End fittings shall be steel, brass or bronze.

D. Outlet Boxes and Fittings

The Contractor shall provide outlet boxes and fittings for rigid and flexible conduit. The outlet boxes and fittings required for the work which constitutes a part of the conduit system, shall be of approved types.

Fittings, bodies and boxes installed on PVC coated conduits shall have interior and exterior PVC coatings equivalent and corresponding to that of the conduit on which they are installed

For outdoor, wet and corrosive areas, conduit fittings and outlet bodies shall be cast gray iron alloy, cast malleable iron bodies and covers. All units shall be gasketed, watertight, and threaded with five full threads and shall have rust-proofing in accordance with the requirements of this Section.

Threaded cast ferrous metal, hub type outlet boxes shall be used throughout, except in the interior walls of superstructures and in roof slabs protected by built-up roofing where pressed steel boxes shall be installed. Cast iron or alloy outlet boxes of the proper size and depths for the application,

complete with watertight gaskets and covers secured by brass screws, shall be furnished and installed as indicated on the Contract Drawings or as required by the conduit run. Outlet boxes, furnished and installed for the installation of lighting fixtures, switches and receptacles in a future contract, shall be furnished with watertight gaskets and blank covers.

For non-hazardous, indoor dry dusty areas pressed steel boxes of the proper size and depths for the application shall be provided. Boxes shall be rated NEMA 12, not less than No. 14 U.S. Standard Gauge (0.078 inch). The conduit openings shall be provided with oil-resistant gaskets. Conduits shall be fastened to these boxes with locknuts and bushings, and all unused outlets or holes shall be left sealed.

All outlet boxes intended for the support of fixtures shall be provided with approved fixture studs.

For concealed conduit runs in outside walls and all exposed conduit work, connections to boxes and fittings shall be made through threaded holes, unless otherwise approved by the Engineer. For concealed conduit work in non-hazardous areas in other than outside walls, connections between conduit and boxes may be made with drilled holes, using locknuts and bushings.

Where necessary unions may be used.

a. In non-hazardous locations unions shall be universal or Erickson

b. In hazardous locations unions shall be type UNF, UNL or YNY.

All boxes installed for concealed conduit, shall be provided with extension rings or plaster rings and covers as required. For non-hazardous, dry indoor areas stainless 302/304, satin beveled steel cover and device plates for surface mounted boxes shall be used. For corrosive locations, galvanized ferrous and galvanized cast ferrous metal cover and device plates with neoprene gaskets shall be used.

Outlet boxes and fittings installed on PVC coated conduit shall also include interior and exterior coatings equivalent to the conduit.

E. Conduit Accessories

The Contractor shall provide conduit accessories for use with the conduit system. The conduit accessories shall be of approved types.

Expansion and Deflection Fittings:

a. Expansion and deflection fittings shall be made up of non-corrodible parts and shall provide for ample longitudinal and lateral movement. A suitable bond shall provide a low resistance, continuous longitudinal path for ground currents.

b. Expansion and deflection fittings shall be watertight cast iron, malleable iron or hot dipped galvanized. Fittings shall be corrosion-resistant, UL listed and compatible with the conduit system.

c. Expansion /deflection fittings shall provide both expansion and deflection in a single fitting in accordance with the following:

1) Axial expansion or contraction up to 3/4-inch.

2) Angular misalignment up to 30 degrees.

3) Parallel misalignment up to 3/4-inch.

4) Expansion fittings shall provide expansion /contraction with eight-inch total movement.

Sealing Fittings:

d. Sealing fittings shall be cast gray iron alloy or cast malleable iron or copper free aluminum with zinc electroplate and lacquer or enamel finish.

e. Sealing fittings shall have an ample opening with threaded closure for access to conduit hub for making dam. Sealing fiber and compound shall be suitable for use with the fitting and shall be the products of the fitting manufacturer.

f. For corrosive locations, seal fittings shall include interior and exterior coatings equivalent to the PVC conduit coating specified under this Section.

Drain Fittings:

g. Drain fittings shall be a combination device designed to provide ventilation to minimize condensation and drains accumulated condensate.

h. The combination drain/breather fitting shall be 3/8 inch male thread size with stainless steel body.

Transition Fittings:

i. Transition fittings shall be used where metallic conduit enters PVC boxes.

Conduit Hubs:

j. Conduit hubs shall be threaded, insulated throat type with bonding screw locknut.

k. The conduit hub and locknut shall be malleable iron or zinc and shall include a 90-degree C insulating surface and a sealing ring for a water tight and dust tight connection.

Conduit Bushings:

l. Conduit bushings shall be insulated, grounding type with lay-in-lug connection. Two locknuts shall be provided for each bushing.

m. The conduit bushing and locknuts shall be steel, malleable iron or zinc. The bushing shall include a 90 degrees C insulating surface.

Duct Seal:

n. Duct seal shall be a suitable for forming a water and gas tight seal between cables and conduits.

o. Completed seal shall be resistant to gasoline, oils, dilute acids and bases.

p. The completed seal shall be capable of blocking water pressure of at least 10 psi.

Thruwall Seals and Bushings:

q. New Construction

1) WSK and WCSC type thruwall seals shall be used for conduits and cables passing through exterior subsurface walls and exterior concrete walls.

2) CSMI type seal bushings at the inside and CSMC type seal bushings at the outside of the structure in the same core bit-drilled hole shall be used for conduits passing through interior concrete wall, interior floors, interior block walls, exterior block walls, exterior subsurface walls, exterior concrete walls, floor slabs.

3) CFS and or CFSI type fire stop fittings shall be used for conduits passing through fire rated floors and walls.

4) TW type thru wall type barriers shall be use for multiple conduit runs passing through interior or exterior and fire rated walls.

r. Existing Construction

1) SK and FSCS type seals shall be used for conduits and cables passing through concrete floors and floor slabs.

2) CSMI type seal bushings at the inside and CSMC type seal bushings at the outside of the structure in the same core bit-drilled hole shall be used for conduits passing through interior concrete wall, interior floors, interior block walls, exterior block walls, exterior subsurface walls, exterior concrete walls, floor slabs.

3) CFS and or CFSI type fire stop fittings shall be used for conduits passing through fire rated floors and walls.

4) TW type thru wall type barriers shall be use for multiple conduit runs passing through interior or exterior and fire rated walls.

Conduit Tags:

s. Conduit tags shall be 19 gauge, 1-1/2-inch diameter round brass which shall be secured to the conduit with annealed brass wire.

t. Conduit tags shall be clearly stamped with the conduit number in conformity with the conduit and cable schedule or as directed by the Engineer.

Conduit Markers:

u. Conduit identification markers shall be self-sticking color-coded tape. Identification tape shall be two inches wide and colored in accordance with the color banding specified under this Section.

F. Terminal, Junction and Pull Boxes.

The Contractor shall provide terminal, junction and pull boxes as shown on the Contract Drawings and where otherwise required, or as directed by the Engineer.

Boxes located indoor in dry, dusty areas shall be NEMA Type 12, constructed of welded and galvanized sheet steel. Boxes of dimensions 24 inches and less shall be 14 USS standard gauge metal. Boxes of dimensions greater than 24 shall be 12 USS standard gauge metal, except 10 USS standard gauge shall be used for boxes with any dimension of 36 inches or more. Boxes located in other areas shall conform to the following area classifications:

a. For submersible locations boxes shall be submersible NEMA Type 6P. Boxes shall be constructed of PVC and shall include a foam-in-place gasketed lid attached with stainless steel screws.

Unless otherwise noted, pull and junction boxes shall be provided with covers held in place by brass screws. Terminal boxes shall be provided with terminal block supports and approved hinged covers fitted tightly against a gasket and secured by lug bolts and wing nuts. Hinges, lug bolts, wing nuts and other fittings shall be made of an approved, non-ferrous, non-corrodible metal. All boxes shall be provided with rabbeted gaskets or flange gaskets securely held in place.

Tapping for threaded connections to outlet boxes, junction boxes, pull boxes and conduit fittings in non-explosion proof construction shall conform to the following:

b. All threads shall be tapered.

c. If threads for connection of conduit are tapped all the way through a hole in an enclosure, or if an equivalent construction is employed, there shall be not less than 3-1/2 threads in the metal and the construction of the enclosure shall be such that a suitable conduit bushing can be properly attached.

d. If threads for connections of conduit are not all the way through a hole in a box wall, conduit hub or the like, there shall be not less than five full threads in the metal and there shall be a smooth, well rounded inlet hole for the conductors, which shall afford protection to the conductors equivalent to that provided by a standard conduit bushing and which shall have an internal diameter approximately the same as that of the corresponding trade size of rigid conduit. The threaded hole shall be provided with a conduit end stop.

e. Tapping for threaded connections for explosion proof construction shall conform to the requirements of the NYCEC for construction in Class I, Division 1, and hazardous locations.

Cast iron or cast ferrous alloy outlet boxes, junction boxes, pull boxes, conduit fittings and conduit accessories such as box covers shall be rust-proofed by zinc coating applied by the "hot-dip" process or shall be given a rust protective coating applied by either of the following methods:

f. Method A:

1) Castings shall be given a mechanical and chemical cleaning.

2) Castings shall be given a phosphoric acid type dip.

3) Then a coating of zinc chromate primer shall be applied, and finally

4) A coating of baked enamel finish shall be applied over the outside and inside surfaces of the castings.

g. Method B:

1) Castings shall be given a mechanical and chemical cleaning.

2) Then a coating of cadmium shall be deposited electrolytically.

3) Then a coating of zinc shall be applied by electroplating.

4) Then a vinyl resin base aluminum lacquer shall be applied.

Stamped steel outlet boxes, junction boxes and box covers shall be rust-proofed by a zinc coating applied by an electro-galvanizing or sherardizing process. Fabricated sheet steel boxes shall be formed from galvanized sheet steel. Welded joints shall be touched up with aluminum lacquer and boxes and covers shall be given a shop priming coat of zinc chromate rust inhibiting paint.

Terminal blocks shall be used within terminal boxes for termination of prepared conductors No. 10 AWG and smaller. Terminal blocks shall be in accordance with the following:

h. Terminal blocks shall be high density, screw terminal type suitable for rail mounting with quantities sufficient for the conductors to be terminated plus 20 percent spare.

i. Terminal blocks shall be NEMA rated, 600 volt, 35 ampere suitable for 85 degrees C.

j. Terminal block components shall have stainless steel and tin plated copper alloy components, backed out captive screws and marking surface.

1.13 Fabrication / Assembling / Finishes

A. Not Used

1.14 Source Quality Control / Shop Tests

A. Not Used

EXECUTION

1.15 Examination / Preparation

A. All conduits shall be installed in accordance with the requirements specified under this Section and in conformity with the sizes stated in the Specifications or shown on the Contract Drawings. They shall be installed complete with all accessories, fittings and

boxes, in an approved and workmanlike manner so as to provide proper raceways for electrical conductors.

B. The Contractor's attention is called to the fact that all conduit runs indicated on the Contract Drawings are shown diagrammatically for the purpose of outlining the general method of routing the conduits to avoid interference. Where conduit runs are not shown, it shall be the responsibility of the Contractor to establish the runs required based upon the various systems shown on the Contract Drawings.

C. Should any structural difficulties prevent the setting of cabinets, boxes, conduits, etc., at points shown on the plans, deviations therefrom as determined by the Engineer will be permitted and shall be made without additional cost.

D. All exposed steel conduits, fittings, boxes, straps, racks and hangers shall be painted in conformity with Section 09 91 00 - Painting. PVC coated conduit systems shall not be painted. Paint shall match the gray color of the PVC coated conduits.

E. Conduits shall be tagged using conduit tags. Conduit tags shall be installed where conduits terminate in equipment and enclosures.

F. Exposed conduits shall be color banded using conduit markers. Markers shall also include operating voltage when over 600 volts. Conduit markers shall be installed 360 degrees, double wrap around conduit exterior. Conduit markers shall be installed where conduits enter equipment, boxes, within each room, at wall penetrations and 50 feet on centers in each area. When exposed conduits are to be painted, markers shall be installed after the conduits are painted. Color banding shall be in accordance with the following:

120/208 volt AC: Gray.

277/480 volt or 480 volt AC: Sand.

Low Voltage Switching, Instrumentation and Controls System: Black.

G. All enclosing cases, including condulets and conduit bodies, for fire, sprinkler, smoke detection, and associated systems alarm apparatus and equipment shall be painted or colored Fire Department “RED”, in accordance with New York City Building Code, unless otherwise required by the local Authority Having Jurisdiction (AHJ).

1.16 Installation

A. Installation of Raceways

The Contractor shall install all exposed raceways parallel or at right angles to walls and ceiling beams. Changes in directions shall be made with bends, elbows and pull boxes. All parallel runs shall be spaced uniformly throughout and secured in place with hangers and fasteners. Brace raceways to satisfy the specified seismic requirements in accordance with the restraint details.

Conduits, where exposed, shall in all cases be substantially supported in an approved manner, but they shall not be fastened to or come in contact with any other pipes, ducts or other work of a similar nature. In all exposed work, approved channel or angle iron hangers, racks, one-hole straps or a combination thereof shall be provided to support the conduits. Where conduits are supported with one-hole straps, spacers shall be used to provide 1/4-inch minimum clearance between the conduits and walls or ceilings.

Hanger rods for trapeze type hangers shall be not less than 5/8 inch diameter. Conduit supports shall be located at intervals not exceeding 8 feet. Conduits shall be securely fastened to each support with U-bolts, straps or clamps.

All concealed conduits shall be placed in walls, floors, ceilings or slabs at the proper time in accordance with the progress of the structural work. The Contractor shall cooperate in every respect in meeting schedules and shall not delay the structural work unnecessarily.

Conduits embedded in concrete shall be blocked and braced in place by use of adequate conduit separators to prevent displacement during the pouring of concrete. The Contractor will be held responsible for proper position of conduits and shall rearrange any conduit that may be displaced while concrete is poured, without additional cost.

Where conduit runs are to be concealed and the Contractor fails to place such conduit in sufficient time to be included in the structures and the structures are completed without such conduit, the Contractor shall install such runs either concealed or exposed as directed by the Engineer, with no extra payment for additional work or for more conduit than the original lengths.

Embedded conduit shall be run in structural concrete in the center of slabs and walls and above waterstops. Conduit connections shall be made watertight. Contractor shall confirm that concrete thickness is sufficient for embedding the quantity of conduits intended. Unless specifically shown otherwise on the Contract Drawings or stated in the Detailed Specifications, embedded conduits shall be in accordance with the following criteria:

a. Minimum concrete thickness shall be as follows:

   1) For concrete 16 inches thick and less, the minimum concrete thickness shall be 11.5 inches plus the depth of the largest conduit assembly. The conduit assembly depth shall be from the top of the uppermost conduit to the bottom of the lowest conduit.

   2) For concrete greater than 16 inches thick, the minimum concrete thickness shall be 13.5 inches plus the depth of the largest conduit assembly.

   3) For concrete at foundation slabs, an additional inch shall be added to the minimum concrete thicknesses previously stated.

b. Conduit spacing shall be as follows:

   1) Conduits shall be separated three times outer diameter of larger conduit center to center.

   2) For multiple conduit layer assemblies, conduits shall be separated vertically three times outer diameter of larger conduit center to center.

   3) When conduits cross at a given point, the conduits may be in direct contact and the angle of cross shall be 45 degrees or greater. Conduits may also cross within the vertical spacing of a multi-conduit layer assembly.

4) When conduits cross a structural expansion joint, conduits shall be separated three times outer diameter of larger conduit fitting center to center.

A run of conduit between outlet and outlet, between fitting and fitting or between outlet and fitting shall not contain more than the equivalent of three quarter bends, including those bends located immediately at the outlet or fitting.

Factory-made conduit bends or elbows shall be used wherever possible in making necessary changes in direction. Field bends shall be carefully made so as to prevent conduit damage or reduction in the internal areas. The radius shall not be less than six times the nominal diameters for the conduit with carefully matched bends on parallel runs so as to present a neat appearance.

All conduits, where cut, shall be carefully reamed to remove burrs. No running threads will be permitted. All screw joints shall be watertight. Conduits shall be fitted in an approved manner to all devices and boxes. The ends of all conduits shall be equipped with suitable approved conduit fittings. The ends of all empty conduits shall stub up six inches above the slab and shall be capped.

As far as practicable, conduits shall be pitched to drain to outlet boxes or otherwise so installed as to avoid trapping moisture. Trapped conduits in concealed construction shall be provided with outlet boxes for drainage. Where necessary drainage in outlet boxes or where dips are unavoidable in exposed conduits, a drain fitting shall be installed at the low point.

Thruwall type seals and conduit sealing bushings shall be installed for all conduits passing through concrete slabs, floors, walls or block walls.

Conduit runs shall be installed so as to avoid flues, heat sources, and steam or hot water pipes. A minimum separation of 12 inches shall be maintained where conduit crosses or parallels hot water, steam pipes or heat sources.

Where conduit enter or leave equipment located within electrical and control rooms the conduit shall be sealed and packed with a suitable duct seal compound.

A 250 pound tested polyethylene pull tape shall be provided in all empty conduits, with a minimum 8 inch of slack, double backed into the conduit. Conduit shall be protected immediately after installation by installing flat non-corrosive metallic discs and steel bushings designed for this purpose at each end. Discs shall not be removed until it is necessary to clean the conduit.

All conduit that is cut on the job shall be cut square and taper reamed to remove burrs before installation. Where steel conduit is cut and threaded on the site, it shall be coated before and after making connections.

Conduits embedded in concrete shall stub up 6 inches above the slab. A three inch high curb extending three inches from the outer surface of the conduit penetrating the floor shall be provided to prevent corrosion. Conduit stub-ups shall be terminated in couplings, slightly above the finished concrete curb.

B. Conduit Connections to Equipment.

At each motor, limit switch, solenoid valve, electrical control device or other electrically controlled or operated equipment, the Contractor shall install a complete conduit connection between the conduit system and the terminal box of the motor or the conduit connection point of the equipment.

Conduits installed in the conduit system shall be terminated in such locations as to permit direct connections to motors, devices or equipment.

Connections shall be made with rigid conduit if equipment is fixed and not subject to adjustment, mechanical movement or vibration. Rigid connections shall be provided with union fittings to permit removal of equipment without cutting, breaking or burning conduit.

Motors, transformers and equipment subject to adjustment, mechanical movement or vibration shall be connected with flexible metallic conduit.

Devices such as solenoid valves, small limit switches, etc., shall be connected with flexible metallic conduit arranged to prevent strain and distortion.

Flexible conduit connections shall be watertight unless the area of installation requires explosion-proof construction.

C. Installation of Boxes and Fittings.

All concealed outlet boxes shall be set in such a manner that they will be plumb and flush with the finished surface.

Boxes shall be installed rigidly and securely to the structure. Independent supports shall be provided where no walls or other structural surface exists.

Expansion and expansion/deflection fittings shall be installed where conduits cross structural expansion joints and at locations shown on the Contract Drawings. Fittings shall be installed on each conduit and incorporated into the expansion joints of structures, at right angles to the joint, to insure their proper functioning and preservation.

Expansion fittings shall be installed on exposed conduit runs exceeding 200 feet. Unless specifically shown otherwise on the Contract Drawings or stated in the Detailed Specifications, when crossing structural expansion joints larger than one inch, an expansion fitting shall also be installed together with an expansion/deflection fitting. The fittings shall be installed on each conduit run in accordance with manufacture's recommendations to provide the additional movement necessary.

All conduit connections in wet and corrosive locations shall be made up watertight and shall terminate at enclosures with an approved conduit hubs.

All conduit connections in dry and dusty locations shall terminate at enclosures with bushings and lock nuts. Terminations shall include one bushing and two lock nuts at each location. Lock nuts shall be installed one inside and one lock nut outside the enclosure. All conduit shall be bonded to the safety ground.

At pull and junction boxes having any box dimension in excess of 18 inches, jumper type grounding bushings shall be installed on conduit ends and jumper wires shall be installed to bond all conduits and to bond conduits to boxes.

All insulated grounding bushings shall be bonded together and to the structure of the enclosure by a continuous, copper bonding wire.

Removable, flame-retardant, insulating cable supports shall be provided in all boxes with any dimension exceeding 3 feet.

Scratched PVC coated boxes and fittings damaged as a result of installation work shall be touched up by field applying PVC coatings. All touch up work shall be in strict conformance with manufacturer's recommendations.

D. Installation within Hazardous Areas.

Explosion-proof boxes and fittings shall be of a type approved by the Engineer. Boxes and fittings shall be of cast iron with finish as specified hereinbefore or of an aluminum alloy specially developed for use in hazardous areas.

Explosion-proof boxes shall be suitable for the installation of explosion-proof switches, receptacles, lighting fixtures or other devices as indicated. All conduit connections to such boxes shall be made with threaded fittings. Bushings and locknut connections shall not be used.

Conduits terminating at explosion-proof boxes, enclosing circuit opening equipment, shall be sealed at the entrance to the box with an approved compound-filled sealing fitting to prevent passage of explosive or combustible gases through the conduit. Where construction prevents the use of sealing fittings, the ends of the conduits shall be properly sealed with sealing compound.

Sealing fittings shall be installed to seal each conduit leading from or entering into hazardous locations. Exposed conduits passing through hazardous locations shall be sealed at point of exit and entrance.

The installation of explosion-proof boxes, fittings and all conduits in connection therewith shall conform to the requirements of the NYCEC for Class I, Division 1 Group D hazardous location.

1.17 Field Testing / Quality Control

A. After installation, the electric conduit system shall be field tested. The field tests shall be witnessed by the Engineer and certified by the Contractor. The Contractor shall provide testing consisting of the following:

Each conduit shall be tested by pulling through a cylindrical mandrel as specified under this Section. Maintain a record of all conduits testing clear.

Conduit systems shall be ground tested in the presence of the Engineer, who will inspect all enclosures, pull and junction boxes for bonding to the safety green conductor pulled with the nominal 120 volt and higher power and control circuits, and for bonding of the conduit grounding bushing to this safety ground.

The separation of above safety grounding system from the instrumentation signal grounding shall be verified.

The Contractor shall provide a Field Test Report. The Report shall identify the testing performed and the results obtained.

1.18 Startup / Demonstration

A. Not Used

1.19 Adjusting / Protection / Cleanup

A. All conduits shall be carefully cleaned before and after installation and all inside surfaces shall be free from all imperfections likely to injure the cable. Conduits shall be cleaned in accordance with the following:

After erection of complete conduit runs,conduits shall be snaked with a suitable swab to which shall be attached an approved tube cleaner equipped with an approved cylindrical mandrel of a diameter not less than 85 percent of the nominal diameter of the conduit.

All conduits through which the mandrel will not pass shall be removed and replaced by the Contractor at the Contractor's expense.

After snaking, the ends of the dead-ended conduits shall be protected with standard malleable iron caps to prevent the entrance of water or other foreign matter.

Conduit ends shall be protected after cleaning with caps to prevent entrance of water, concrete, debris or other foreign substance.

END OF SECTION

26 05 43 UNDERGROUND DUCTS, MANHOLES AND RACEWAYS FOR ELECTRICAL SYSTEMS

GENERAL

1.01 Summary

A. Requirements for providing underground ducts, electric manholes and raceways for Electrical Systems.

This Section also includes requirements for providing electric handholes.

Underground ducts, electric manholes, electric handholes and raceways shall be provided in accordance with the requirements specified under this Section, the Specifications and the Contract Drawings.

Underground ducts shall be concrete encased. The Contractor shall provide reinforced concrete encasement for the duct system.

B. The Contractor shall perform all excavations, complete all forms, and do backfilling and tamping, as required, unless specifically shown otherwise on the Contract Drawings or stated in the Specifications.

1.02 Payment

A. There is no separate payment provision for this Section.

1.03 Related Sections

A. Section 05 50 00 - Metal Fabrications

B. Section 26 05 33 - Raceways and Boxes for Electrical Systems.

1.04 References

A. All references to the Utility or Electric Utility shall refer Consolidated Edison Company of New York or the Local Electric Utility Having Jurisdiction.

B. Reference Standards

Underground ducts, electric manholes, handholes and raceways shall comply with the latest applicable provisions and recommendations of the following:

a. NEMA TC2 - Electrical Polyvinyl Chloride (PVC) Tubing and Conduit.

b. NESC - National Electrical Safety Code

c. NYCEC - New York City Electrical Code

d. UL 651 - UL Standard for Safety Schedule 40, 80, Type EB and A Rigid PVC Conduit and Fittings.

e. UL 2420 - UL Standard for Safety Below ground Reinforced Thermosetting Resin conduit (RTRC) and Fittings.

1.05 Description

A. Not Used

1.06 Quality Assurance

A. Not Used

1.07 Submittals

A. Contractor shall submit Shop Drawings and material specifications for the approval of the Engineer. Submittals shall include, but not be limited, to:

A list of proposed manufacturers with the products they produce proposed for the contract.

Manufacturer's technical information with name, designation and catalog number for all products for the underground ducts systems, manholes, handholes, raceways and accessories proposed for use.

Drawings showing interior and exterior dimensions and details of openings, jointing, inserts and reinforcing.

Scaled Shop Drawings showing the routing of the duct banks and the location of manholes, handholes and the principal outline of buildings and structures. Reference duct banks dimensionally from fixed objects or structures. Include profiles of duct banks showing crossings with piping and other underground systems.

1.08 Delivery, Storage, and Handling

A. Underground ducts, manhole, handholes and raceways shall be delivered, stored and handled in accordance with this Section, the Specifications and the manufacturer's instructions.

1.09 Spare Parts, Special Tools, and Supplies

A. Not Used

1.10 Special Warranty Provisions / Guarantee Periods

A. Not Used

PRODUCTS

1.11 Manufacturers

A. Rigid Steel Conduit

Rigid Steel Conduit see this Section

B. Warning tape shall be as manufactured by:

Seton, Branford, CT.

Ideal Industries, Sycamore, IL.

Or approved equal.

C. Duct Seal see this Section

D. Reinforced Concrete see this Section

E. Expansion and Deflection Fittings see this Section

F. Conduit Bushings see this Section.

1.12 Materials / Equipment

A. Rigid Steel Conduit

PVC coated Rigid Steel conduit shall be used throughout the project. Rigid Steel Conduit shall be in accordance with the requirements of Section 26 05 33 - Raceway and Boxes for Electrical Systems.

B. Underground Duct Accessories and Fittings

Conduit Spacers

a. Factory fabricated conduit spacers shall be nonmetallic, vertical and horizontal interlocking type to maintain spacing between conduits. Spacers shall be suitable for all types of conduit in multiple sizes.

Warning Ribbon

b. Warning ribbon shall be a three inch wide, four mil polyethylene or polyvinyl chloride detectable tape. The tape shall be permanently imprinted in red color, “CAUTION BURIED ELECTRIC LINE BELOW.”

Duct Seal

c. Duct seal for conduits shall be in accordance with the requirements of Section 26 05 33 - Raceway and Boxes for Electrical Systems.

Reinforced Concrete

d. Concrete for envelope shall be in accordance with City requirements and specifications.

Expansion and Deflection Fittings

e. Where specifically shown on the Contract Drawings, expansion and deflection fittings shall be provided at the structural joints of the underground duct system.

f. Expansion and deflection fittings shall be in accordance with Section 26 05 33 - Raceway and Boxes for Electrical Systems.

Conduit Bushings

g. Conduit bushings shall be provided for the termination of rigid steel conduits at each manhole.

h. Conduit bushings shall be in accordance with Section 26 05 33 - Raceway and Boxes for Electrical Systems.

C. Manholes and Handholes

Manholes and handholes shall be cast-in-place type of reinforced concrete. Where specifically shown on the Contract Drawing or stated in the Detailed Specifications, the use of precast type manholes and handholes shall be permitted.

Manholes associated with service feeders shall be in accordance with the requirements of the Utility.

Concrete for manholes and handholes shall be in accordance with the requirements of standard City specifications. Manholes and handholes shall be constructed to withstand ground water pressure when completely submerged by rising water table.

Manholes and handholes shall have dimensions as shown on the Contract Drawings and shall be provided with all duct entrances sized and located to suit duct banks.

Concrete floor shall be sloped towards the drain sump at the center of each manhole and handhole.

All manhole and handhole hardware shall be hot dipped galvanized steel.

D. Manhole and Handhole Accessories

Frames and Covers

a. Each manhole and handhole shall be provided with a cast-iron watertight manhole frame with inside and outside covers.

b. All frames and covers shall be in accordance with the requirements of Section 05 50 00 - Metal Fabrications. Frames and covers shall be annealed, high quality, gray cast iron, free from blowholes, sandholes, scabs, fins, scales and other defects. They shall be uniform in form and dimensions, and shall be as approved by the Engineer.

c. The frames shall be so set that the completed installation will provide a proper alignment of the outside covers with the roadways or other surrounding areas. Manhole and handhole covers shall fit the frame without undue play.

d. The following words shall be cast in the top of all manhole and hand hole covers, as appropriate.

1) “ELECTRIC POWER, LOW VOLTAGE”

2) “ELECTRIC POWER, MEDIUM VOLTAGE”

3) “COMMUNICATIONS / INSTRUMENTATION”

Cable Supports

e. Manholes shall be furnished with cable racks, cable hooks and insulators to effectively support all cables indicated for present and future installation.

1) Cable racks shall be made from steel channel with ample strength to support cables. Racks shall be firmly anchored to walls.

2) Cable hooks shall be made from malleable iron.

3) Racks and hooks shall have hot-dipped galvanized finish.

4) Insulators shall be made of high-grade dry-process porcelain with smooth glazed surfaces and shall fit hooks in such manner as to prevent wobbling and insure minimum movement.

Pulling Irons

f. Galvanized steel pulling irons shall be provided for each manhole and handhole. Pulling irons shall be cast in the wall opposite to the centerline of each incoming duct bank and 12 inches below centerline of bottom line of ducts.

Grounding

g. Each manhole shall be provided with a grounding system. The grounding system shall consists of ground rods and cable in accordance with the details shown on the Contract Drawings.

h. Ground rods and cable shall be in accordance with the requirements of –Contract Documents.

1.13 Fabrication / Assembling / Finishes

A. Not Used

1.14 Source Quality Control / Shop Tests

A. Not Used

EXECUTION

1.15 Examination / Preparation

A. Not Used

1.16 Installation

A. Duct Banks

The duct system shall be installed to avoid interferences with structures, piping and other underground systems. Conduit duct banks shall be sized, arranged and installed in a reinforced concrete envelope as shown on the Contract Drawings.

Duct bank trenches shall have the bottom tamped firm and even, and suitably braced side forms shall be employed in forming the envelope.

Duct banks shall follow straight lines as far as possible. Where deviation from a straight line becomes necessary, offsets shall be made using 5 degree angle coupling or make bend with sweeps. The sweep radius shall be 48 inch for 90 and 45 degree bends and 36 inch for 30 degree

bends. Where directed by the Engineer, bends shall be made up with standard factory bends or other approved curved sections.

Duct bank installations and penetrations through foundation walls shall be made watertight.

Duct banks shall be assembled using non-magnetic saddles, spacers and separators. Separators shall be positioned to provide 3-inch minimum concrete separation between the outer surfaces of the ducts.

Concrete covering shall be provided on both sides, top and bottom of the concrete envelopes around conduits. Concrete covering shall be in accordance with the detail shown on the Contract Drawings. Top of concrete encasement shall not be less than thirty inches below finish grade. Add red dye to concrete used for envelopes or trowel a coloring on the concrete for easy identification during subsequent excavation.

Before pouring concrete, written approval shall be obtained from the inspecting engineer.

Ducts shall be firmly fixed in place during pouring of concrete. Concrete shall be carefully spaded and vibrated to insure filling of all spaces between ducts.

Ducts entering manholes and hand holes shall be terminated using suitable end bells. Rigid steel ducts shall be terminated using insulated grounding bushings.

Backfilling for duct banks shall be in accordance with the requirements of Section 31 23 25 - Fill. Backfilling shall be permitted when directed by the engineer to proceed. Backfilling shall not be with material containing large rock, paving materials, cinders, large or sharply angular substances, corrosive material or other materials which can damage or contribute to corrosion of ducts or cables or prevent adequate compaction of fill.

Duct runs shall be sloped for drainage toward manholes and away from buildings with a slope of approximately 3 inches per 100 feet.

A ground cable shall be installed in each duct bank envelope. Cable shall be in accordance with the requirements of Contract Documents. The ground shall be made electrically continuous throughout the entire duct bank system. Ground cable shall be connected to the building, station ground grid, equipment ground buses and to each conduit grounding bushing of the underground duct system. The ground cable shall be terminated at the last manhole or handhole for outlying structures.

A warning ribbon shall be installed approximately 12 inches below finished grade over all underground duct banks carrying cables of 480 volts and higher.

All ducts entering buildings and structures shall be sealed. All empty spare ducts shall be sealed and plugged.

An expansion and deflection fitting shall be installed on each conduit at each of the structural expansion joints when shown on the Contract Drawings. Joints shall be located as defined by the criteria noted on the Contract Drawings.

B. Manholes and Handholes

Manholes and handholes shall be installed where shown on the Contract Drawings. Place each manhole and handhole on a 12 inch crushed-stone base and make level.

Manhole and handhole excavation shall be in accordance with the requirements of Section 31 25 15 - Excavation. Backfilling for manholes and handholes shall be in accordance with the requirements of Section 31 23 25 - Fill.

Manhole and handhole installation shall be completed so that structure is watertight. All penetrations through manhole walls and bottoms to facilitate equipment such as ground rods shall be made through cast in place sleeves. Sleeves shall be made watertight after the installation of equipment. Two coats of bituminous waterproofing material shall be applied to exterior surface of each manhole and handhole. A waterproof gasket shall be provided all around removable precast manhole cap.

Cable racks shall be installed within each manhole for the support of cables. Cable racks shall be in accordance with the following:

a. Attach racks with 3-inch by 3/8-inch diameter tamp-in studs mounted in 1-inch holes drilled into walls of manholes in the absence of inserts. Apply PVC coating to all racks.

b. Provide cable hooks to support each cable on each rack along the cable run within the manholes. Apply PVC coating to all hooks.

c. Individually support each cable at each hook on porcelain insulators. Provide sufficient slack for each cable.

d. In the manhole securely tie each cable in place at each insulator block to prevent excessive movement of insulators, cables, or fireproof tape. Tie cables with non-metallic 3/4-inch strapping tape as manufactured by 3M or tie down with nylon straps.

A grounding system shall be installed for each manhole. All exposed metal, manhole frame and cover, accessories and the concrete reinforcing rods shall be bonded with No. 4 AWG minimum bare copper wire and connected to the duct bank ground in accordance with the details shown on the Contract Drawings.

Concrete curb shall be provided for manholes when required to adjust manhole cover to proper grade. Curb shall be constructed on the roof slab or cone section on which the manhole frame and cover shall be placed. The height of the curb shall be such as is necessary to bring the manhole frame to the proper grade.

For cast in place type manholes and handholes, pulling irons shall be set and other built-in items shall be in place before placing concrete.

1.17 Field Testing / Quality Control

A. Not Used

1.18 Startup / Demonstration

A. Not Used

1.19 Adjusting / Protection / Cleanup

A. Cleaning and Protection

After installation each conduit in each duct bank shall be cleaned and cleared of obstructions and foreign matter by rodding and by the passage of cleaning brushes or cutting mandrels.

After cleaning, the clearance of each conduit shall be checked by passing a 12 inch long mandrel, of diameter 1/2 inch less than the nominal duct diameter, through the entire length of duct run. Ducts which do not permit passage of the mandrel shall be cleared, cut out and replaced or sealed and replaced by additional construction. The duct bank conduit cleaning shall be included in the electric conduit system field test report specified in Section 26 05 33 - Raceways and Boxes for Electrical Systems.

END OF SECTION

26 05 53 IDENTIFICATION FOR ELECTRICAL SYSTEMS

GENERAL

1.01 Summary

A. Requirements for providing labeling and identification.

Labeling and identification shall be provided in accordance with the requirements specified under this Section, the Specifications and the Contract Drawings.

The labeling and identification shall be provided for the identification of electrical equipment.

B. The work shall include providing all voltage signs, equipment nameplates, markers, arc flash labels and tags for all electrical equipment furnished under this Contract.

1.02 Payment

A. There is no separate payment provision for this Section.

1.03 Related Sections

A. Section 26 05 20 - Low-Voltage Cables and Accessories

B. Section 26 05 33 - Raceways and Boxes for Electrical Systems

C. Section 40 05 07 - Hangers and Supports for Process Piping.

1.04 References

A. Labeling and identification shall comply with the latest applicable provisions and recommendations of the following:

NYCEC - New York City Electrical Code.

NFPA 70E - Standard for Electrical Safety in the Workplace.

IEEE 1584 - IEEE Guide for Performing Arc-Flash Hazard Calculation

ANSI Z535.4 - American National Standard for Product Safety Signs and Labels.

BWT Arc Flash - Arc Flash Personal Protective Equipment BWT Guidelines.

OSHA 1910 Subpart S - Electrical.

1.05 Description

A. Not Used

1.06 Quality Assurance

A. All labeling and identification signs and nameplates shall be provided in accordance with the NYCEC, NFPA 70E and OSHA 1910 Subpart S.

1.07 Submittals

A. Contractor shall submit Shop Drawings and material specifications for the approval of the Engineer. Submittals shall include but not be limited to:

Prior to equipment submission, submit a list of proposed manufacturers with the products they produce proposed for the contract.

Submit signs, nameplates and other labeling and identification devices proposed for use with specifications and other data required to demonstrate compliance with the specified requirements.

1.08 Delivery, Storage, and Handling

A. The labeling and identification devices shall be delivered, stored and handled in accordance with the Specifications and the manufacturer's recommendations.

1.09 Spare Parts, Special Tools, and Supplies

A. Not Used

1.10 Special Warranty Provisions / Guarantee Periods

A. Not Used

PRODUCTS

1.11 Manufacturers

A. Labels shall be as manufactured by:

Brady, Milwaukee, WI;

Seton Nameplate Corporation, North Branford, CT;

Or approved equal.

1.12 Materials / Equipment

A. Equipment Nameplates

Equipment nameplates shall be provided in addition to the manufacturer's nameplate, to identify the equipment number and the item's function and the equipment to which it serves.

Equipment nameplates shall be provided in accordance with the requirements specified under this Section and Section 40 05 07 - Hangers and Support for Process Piping.

Equipment nameplates shall be laminated plastic with black letters on a white background. Nameplates for equipment identification shall have 1/2-inch high letter engravings. Nameplates for pilot device identification shall have 1/4-inch high letter engravings.

Nameplates for distribution equipment shall have the following information:

a. Equipment name and number.

b. Voltage.

c. Phases and number of wires.

Pull boxes, junction boxes and control stations shall have a nameplate identifying the equipment name and number.

All feeders and branch circuit devices shall have nameplates identifying the served equipment name and number. Where execution of the work under this Contract requires certain feeders and branch circuit devices to be modified, the Contractor shall provide new nameplates reflecting the modifications. The nameplates shall identify the served equipment name and number.

All control and indicating devices shall have individual nameplates identifying device function.

Nameplate mounting screws shall be 3/16 inch diameter, round-head, stainless steel and self-tapping type. Adhesives shall not be used.

B. Conduit Markers and Tags

Conduit markers and tags shall be provided for the identification of the electric conduit system.

Conduit markers and tags shall be in accordance with Section 26 05 33 - Raceways and Boxes for Electrical Systems.

C. Cable and Wire Markers

Cable and wire markers shall be provided for the identification of the electric wire and cable.

Cable and wire markers shall be in accordance with Section 26 05 20 - Low-Voltage Wires, Cables and Accessories.

D. Arc Flash Labels

Labels shall be provided in addition to the manufacturer's nameplate and equipment nameplate, to identify equipment name, bolted fault and arcing fault current levels, flash protection boundary distances, working distances, personal-protective equipment classes and AFIE (Arc Flash Incident Energy) levels.

Labels shall be able to withstand their usage environment, the print shall not fade, and adhesive should be aggressive enough to avoid peeling. The arc flash labels shall be printed on a durable polyester base over-laminated to protect the text and graphics. The back of the labels shall employ an acrylic adhesive, which allows the labels to be securely and permanently affixed to a wide range of surfaces. Labels shall include no field markings. Labels shall be generally in accordance with ANSI Z535.4.

Labels shall include at a minimum the following information based on the Arc Flash Hazard Analysis performed:

a. Nominal Voltage of the Equipment

b. Flash Protection Boundary

c. Personal Protective Equipment category at the working distance

d. Arc Flash Incident Energy Value (cal/cm²) at the working distance

e. Limited and Restricted Boundaries

f. Study Report Number and Issue Date

g. Location of Study Report.

1.13 Fabrication / Assembling / Finishes

A. Not Used

1.14 Source Quality Control / Shop Tests

A. Not Used

EXECUTION

1.15 Examination / Preparation

A. Not Used

1.16 Installation

A. Signs and Nameplates

All signs, nameplates and tags shall be installed neatly, properly and as recommended by the manufacturers.

Signs and nameplates shall be mounted with screws. Where mounting of signs or nameplates with screws is impractical, the Contractor shall alert the Engineer.

B. Signal Wire and Cable

Control, signal and status wire and cable shall be identified by a unique number. The numbering system shall reflect the actual identification used in the work and shall be documented on the point-to-point wiring diagrams.

1.17 Field Testing / Quality Control

A. Not Used

1.18 Startup / Demonstration

A. Not Used

1.19 Adjusting / Protection / Cleanup

A. Not Used

END OF SECTION

26 05 91 LOW-VOLTAGE ELECTRIC MOTORS

GENERAL

1.01 Summary

A. Requirements for providing low-voltage electric motors. Low-voltage electric motors shall be provided in accordance with the requirements specified under this Section and the Contract Drawings.

1.02 Payment

A. There is no separate payment provision for this Section.

1.03 Related Sections

A. All Common Works Specifications sections (Division 01) apply to this Section.

B. Section 40 05 07 – Hangers and Supports for Process Piping.

1.04 References

A. Definitions

Low-voltage as used in this Section and the Specifications shall mean all equipment, conductors, insulation systems and accessories intended for operation within the 600 Volt Class.

1.05 Description

A. Motor Data

Motor data is specified under the Section of the Specification detailing the requirements of the driven equipment with which the motor is supplied. These data include voltage, rpm, HP and enclosure types

B. Motor Types

The motor types specified under this Section shall include:

a. Single Phase, alternating current, fractional horsepower induction motors.

b. Three Phase, alternating current, NEMA frame, squirrel cage, induction motors.

c. Three Phase, alternating current, above NEMA frame, squirrel cage, induction motors.

d. Three Phase, alternating current, submersible, squirrel cage, induction motors.

e. Three Phase, alternating current, wound-rotor, squirrel cage, induction motors.

f. Direct current, small motors.

1.06 Quality Assurance

1.07 Submittals

A. Contractor shall submit Shop Drawings and material specifications for the approval of the Engineer. Submittals shall include, but not be limited to:

A list of proposed manufacturers with the products they produce proposed for the contract.

For fractional horsepower motors, data sheets showing nameplate data shall be submitted.

For motors rated one horsepower or greater, Motor Test Data Sheets shall be submitted. All values shall be from tests of previously manufactured, electrically duplicate motors or calculated data. Sheets shall be marked to indicate motor application location, manufacturer, type, frame size, bearing type, lubrication medium and enclosure type. Data Sheets shall at a minimum include:

a. Winding resistances.

b. Torques.

c. Efficiencies.

d. Power factors.

e. Slip.

f. Full load.

g. Locked rotor and no load amperes.

h. Rotor voltage and amperes for wound rotor units.

i. Nameplates temperature and results of dielectric tests.

An outline drawing or an outline data sheet showing complete motor dimensions shall be submitted to cover every motor rated greater than 1/3 horsepower. Several motors of the same type and rating for the same application may be covered by a single drawing or outline sheet. Drawings or sheets shall bear complete identifying data including frame size, speed, horsepower ratings and application for each particular unit.

Description of proposed shop and field testing methods, procedures and apparatus with calibration dates shall be submitted. Testing methods and procedures shall be submitted in advance prior to conformation of witness testing dates and actual testing as follows:

j. At least 60 days in advance for test locations in the US.

k. At least 90 days in advance for test location outside of the US.

Qualifications of proposed testing firm to perform acceptance testing shall be submitted. Submit firm experience records at least 60 days in advance to actual testing, five recent references with phone numbers shall be submitted.

All motor accessories, heaters, detectors, etc., shall be submitted.

B. Operation and Maintenance Manuals.

Operation and Maintenance Manuals shall be submitted in accordance with this Section and the Specifications.

1.08 Delivery, Storage, and Handling

A. Low-voltage electric motors shall be delivered, stored and handled in accordance with this Section, the Specifications, the motor manufacturer's instructions and the following:

Motors shall be inspected for shipping damage when received.

All sleeve or oil lubricated bearings motors shall be identified and the bearing reservoirs filled to normal level.

Motors shall be handled using motor base lifting lugs. Avoid pounding or bumping of motor which may damage motor. A hoist and spreader bar arrangement shall be used to avoid damage.

Motors shall be stored indoors in clean, dry heated areas.

Motor space heaters shall be energized to prevent moisture condensation throughout the storage and construction period.

Motors shall not be stored in areas subject to continuous vibration. A small quantity of grease shall be injected into each bearing on a monthly basis. Purged grease shall be inspected for water or rust. Motor shaft shall be rotated by hand to check for binding.

1.09 Spare Parts, Special Tools, and Supplies (refer to the table in Section 40 61 22 , Article 1.09, E.)

A. Lubricants

The Contractor shall furnish as part of the bulk lubricant order the quantity of lubricants required to operate and maintain the motors furnished under this section for a period of one year after acceptance. As a minimum, there shall be provided sufficient oil and grease to make a least one lubricant change for each motor as applicable.

1.10 Special Warranty Provisions / Guarantee Periods

A. Not Used

PRODUCTS

1.11 Manufacturers

A. Driven Equipment

The motor manufacturers are as shown on the Contract Drawings or stated in the Sections detailing the driven equipment.

1.12 Materials / Equipment

A. Design Requirements

Motors shall be designed, built, and tested in accordance with the latest applicable editions of ANSI/IEEE, NEMA, UL and NYCEC. The classifications, ratings, performance and testing of all motors shall be in accordance with the latest edition of NEMA MG1.

Motors shall be premium efficiency type and shall have nominal efficiencies in accordance with NEMA MG1. Motors with horsepower or rpm's not listed by NEMA shall conform to comparable standards of construction and materials as those for listed NEMA motors.

Motors shall be of sufficient capacity to operate the driven equipment under all conditions of operation without loading the motors beyond their rated nameplates current and power under all operating conditions imposed by the driven equipment.

The rating of the motors offered shall in no case be less than the horsepower shown on the Contract Drawings or stated in the Specifications. Both the rating and the characteristics of the motor shall be suitable for the successful operation of the driven equipment, under load conditions, within nameplates values of service factor and ambient temperatures.

Motors shall be of three phase construction for ratings above 1/3 horsepower and single phase construction for 1/3 horsepower or less.

Low-voltage motors shall be of a type approved for starting characteristics and ruggedness as may be required under the actual conditions of operation.

Low-voltage motors shall be designed for full voltage starting.

Reduced voltage starters, shall ensure that the motor develops ample torque and is able to accelerate and attain its operating speed under the load conditions imposed by the driven equipment.

Not used.

Portable devices shall have totally enclosed motors and approved cord with provisions for grounding. They shall be suitable for the available power supply.

All motors shall be continuous time rated suitable for operation in a 40 degrees C ambient.

Motors shall comply with the EPAct 1992 and EISA 2007.

Variable-speed motors shall comply with NEMA MG1.

Variable-speed motors operated from variable frequency drives shall comply with NEMA MG1.

B. Single Phase Motors

Single phase motors shall be rated 115 or 230 volt, capacitor start. Small fan motors may be split-phase or shaded pole type if such are standard for the equipment.

Bearings for single phase, open, enclosed and explosion-proof motors shall be grease lubricated ball type with grease fittings or with lubrication for 10 years of normal operation.

Motors shall be totally-enclosed except small fan motors may be open type if suitably protected from moisture, dripping water, and lint accumulation. Motor features shall be in accordance with the following:

a. Open motors shall be split phase or capacitor start in accordance with torque requirements, 1.35 Service Factor, 40 degrees C Ambient Class B Insulation.

b. Enclosed motors shall be capacitor start, fan cooled 1.15 service factor, 40 degrees C ambient, Class F, treated insulation. Enclosed motors shall be totally enclosed fan cooled, or non-ventilated. Enclosed motors shall be designed to withstand chemical corrosion and shall be severe duty type equipped with cast iron end shields, neoprene

gaskets, stainless steel shaft, heavy pressed steel fan cover and provision for threaded conduit connection.

c. Explosion-proof motors shall be fan cooled, split phase or capacitor start in accordance with torque requirements, 1.0 service factor, 40 degrees C ambient, equipped with swivel conduit connector and long leads for external connection.

d. Direct drive fan motors shall be shaded pole or permanent split capacitor, 1.35 service factor, 40 degrees C ambient.

C. Three Phase Motors

General

a. Three phase motors shall be squirrel cage induction type, designed for operation on a 3 phase, 60 hertz alternating current system.

b. Three phase squirrel cage motors shall be severe duty and shall conform to the requirements of IEEE 841

c. Motor voltage shall be as shown on the Contract Drawings.

d. Motors used with adjustable frequency controllers shall be as stated in this Section, the Specifications and the Contract Drawings.

e. Unless otherwise required by the load, all motors shall be NEMA Design B, normal starting torque. Locked rotor KVA/HP shall not exceed NEMA Code Letter G for 20 HP motors and larger.

f. The design of the stator, rotor and shaft shall be in accordance with the approved practice of leading manufacturers. The motor frame shall be a rigid structure, designed to maintain the lamination in correct alignment and shall not be dependent on the lamination or bolts for rigidity.

g. Motors having considerable core length shall be provided with approved means for taking up shrinkage in length.

h. Motor rotors shall be of cast or fabricated aluminum or fabricated copper or copper alloy as required to meet the motor performance characteristics of slip, torque, and efficiency.

Bearings

i. Horizontal motors shall be provided with either the rolling element (anti-friction) or sliding element (sleeve) type bearings. Anti-friction type bearings shall be used for all NEMA frame motors. Where greater power and speeds are required by the driven equipment, sleeve type bearings shall be used. The bearings for all motors larger than 200 horsepower shall be insulated to prevent shaft currents and related bearing damage.

j. Bearings for 3 phase drip-proof, enclosed and explosion-proof motors shall be grease lubricated, ball type. Bearings shall be fitted with inlet

fittings and outlet plugs. Motor bearings and grease reservoirs shall be protected from the entry of contaminants.

k. Bearings for direct drive fan motor shall be of the oil lubricated sleeve type.

l. When anti-friction bearings are furnished on horizontal motors for ratings to 500 horsepower and speeds to 3600 RPM they shall have a minimum bearing life of 100,000 hours as defined by AFBMA. Suitable fittings shall be provided to permit convenient positive purging of old grease during regreasing operation. Close running shaft seals shall prevent leakage of grease as well as prevent the entrance of foreign materials such as water and dirt into the bearing area. Motors equipped with anti-friction bearings shall have the appropriate AFBMA number stamped on a nameplate attached to the motor.

m. When furnished, sleeve bearings shall be ring-oiled with an adequate, integral self-cooled oil reservoir. The bearing sleeves shall be lined with a high tin content babbitt to minimize oil contamination. Close running shaft seals shall prevent oil leakage as well as prevent entrance of foreign material such as water and dirt into the bearing area. Oil level sight gages with permanently marked easily discernible oil level shall be provided. In addition, inspection openings to observe the oil rings shall also be provided.

n. When required by motor speed and bearing size, provision shall be made for forced lubrication. The oil supply shall be supplied with motor. In addition, oil rings and an adequate oil reservoir in the bearing housings shall be provided to permit orderly shutdown of the motor in the event of failure of the formed feed lubrication system.

o. Vertical motors shall be provided with thrust bearings adequate for all thrusts to which they can be subjected. The rated minimum life of the thrust bearings shall be at least 15,000 hours when operated at rated speed and full load thrust. The driven equipment manufacturer shall supply the motor manufacturer with the speed and thrust conditions required by the driven equipment.

p. Submersible motor bearings shall be permanently sealed and lubricated. Anti-friction guide and thrust bearings shall be replaceable. Bearings shall have a rated minimum life of 15,000 hours.

Insulation

q. The insulation system for three phase AC motors shall be rated Class F, with a service factor of 1.15 times the nameplate horsepower rating when operated on a sine wave supply and a service factor of 1.0 on an adjustable frequency supply. Temperature rise shall be limited to Class B insulation system when motor is operated continuously at rated horsepower with an ambient temperature not exceeding 40 degrees C.

r. Windings shall be epoxy coated. The windings shall be thoroughly treated with approved insulating compound suitable for protection against moisture, salt air and slightly acid or alkaline conditions. The insulation system for enclosed motors shall be upgraded by additional dips and bakes to increase moisture resistance.

s. Motors for outdoor service and all motors larger than 200 horsepower shall have vacuum/pressure impregnated epoxy insulation (VPI) for moisture resistance. Motors shall be preheated before VPI and baked in a temperature controlled oven.

t. Motors applied in speed varying service and operated from variable frequency controllers shall have an inverter grade insulation system designed and built in accordance with NEMA MG1 Part 31.

u. The stator windings and end turn connections shall be fully brazed to withstand full voltage starting regardless of the starting method indicated in this Section, the Specifications and the Contract Drawings. The bracing system shall essentially eliminate coil vibration under the high current conditions of starting as well as during normal operation. If a tied system is used, it shall be such that no tie depends on the integrity of any other tie within the system.

v. Motors larger than 200 horsepower shall be form wound. Form wound coils with a micaceous ground wall insulation is required with additional insulation similar to Mica 5 and hot pressed to make a sealed system. Coils shall be form wound with mica insulation and each separate coil shall be vacuum pressure impregnated before inserting into slots.

Enclosures

w. Wound rotor motors shall be drip-proof, except for crane and hoist installations and where specified otherwise.

x. Motors shall have a steel or cast iron frame and a cast iron or steel conduit box. For wound rotor motors separate boxes for stator and rotor connections shall be provided. For NEMA frame size motors cast aluminum frames and terminal boxes may be used.

y. Motor enclosures shall conform to the NEMA classifications specified and to the following:

1) Open Drip proof: Motors shall have a steel or cast iron frame, cast iron end brackets and steel conduit box. Vertical motors of the open type shall be provided with drip hoods of approved shape and construction. When the drip hood is too heavy to be easily removed, provision shall be made for access for testing. Open motors shall be provided with corrosion resistant screens over the air openings in accordance with NEMA requirements for guarded machines.

2) Totally enclosed fan cooled and non-ventilated motors shall have a cast iron frame, cast iron end brackets and cast iron conduit box. Drain holes shall be provided on each end of motor.

3) Explosion proof motors shall have a cast iron frame, cast iron end brackets and cast iron conduit box. Unless shown otherwise on the Contract Drawings or stated in the Detailed Specifications, explosion proof motors shall be UL listed for Class I, Division 1, Group D hazardous areas.

4) Severe duty motors shall include a corrosion resistant treatment. Severe duty motors shall have a cast iron frame, cast iron end brackets, cast iron conduit box, stainless steel “T” drains in both end brackets, corrosion resistant fan, and stainless steel hardware.

5) Submersible motors shall be hermetically sealed, watertight with tandem mechanical seals suitable for continuous submergence and listed for Class I, Division 1, Group D locations.

z. Conduit Boxes

1) Motor conduit box shall be split from top to bottom and shall be capable of being rotated to four positions. Motor conduit box shall be in accordance with the following:

a) Conduit box shall be gasketed and shall include rubber-like gaskets between the frame and the conduit box and between the conduit box and its cover.

b) Conduit boxes or openings in motor housings shall be provided with conduit hub type fittings to permit threaded conduit connections. Single phase, explosion-proof and direct drive fan motors shall be provided with conduit fittings and leads to permit external connection.

c) Conduit box sizes shall be in accordance with code requirements. This shall include high-voltage terminations or stress cones. Protective and auxiliary devices, shall terminate in auxiliary conduit boxes for motors rated above 600 volt.

d) Terminal leads shall be flexible and shall be of sufficient length to extend for a distance of not less than ten inches beyond the face of the terminal box. Terminal leads shall be fitted with solder less lugs suitable for attachment to lugs installed on external wiring. Leads shall be sealed with a non-wicking, non-hygroscopic insulating material or an insulating “wrap-cap” as manufactured by Ideal Industries, or approved equal.

e) Provisions for terminal box size, length of leads, size of conduit openings and type of terminal lugs shall be complied with irrespective of any other standards or practice.

f) A motor frame grounding stud shall be provided inside the conduit box. A drilled and tapped hole shall be included.

D. DC Motors

General

a. DC motors shall be designed and built in accordance with NEMA Standard MG1-12 for use on a full wave, single phase, rectified power supply.

b. DC motors shall be heavy duty, industrial SCR drive type, direct current. Motor construction shall be shunt-wound or permanent-magnet type as stated in this Section, the Specifications and the Contract Drawings.

c. DC motors shall provide a constant torque output over the operating speed range, with fixed shunt excitation and variable DC armature voltage.

Bearings shall be grease lubricated, double shielded, with shaft seals.

Insulation

d. The insulation system for DC motors shall be Class F, with a service factor of 1.15 times the nameplate horsepower rating.

e. The windings shall be epoxy coated and include a thermostat protector. Thermostat shall be in accordance with the requirements specified under this Section.

Enclosures

f. DC motor enclosure shall be totally enclosed fan cooled, or non-ventilated. The frame size shall be selected by the manufacturer to prevent overheating when continuously operated at low speeds.

g. Motor enclosures shall be severe duty type, designed to withstand chemical corrosion, and shall utilize corrosion resistant materials for special finishes in their construction. Motors shall be equipped with cast iron end shield, neoprene gaskets, stainless steel shaft, heavy pressed steel fan cover and provisions for threaded conduit connection.

h. When stated in this Sections, the Specification and the Contract Drawings, the motor enclosure shall be fitted with a factory mounted tachometer generator. The generator shall be C-face or flange mounted construction.

E. Accessories

General

a. Motor accessories shall be provided in accordance with the requirements specified under this Section, the Specifications and the Contract Drawings.

Space Heaters

b. Each outdoor motor 5 horsepower and larger shall be provided with space heaters.

c. Each motor 5 horsepower and larger enclosed motors installed indoors, in damp unheated spaces, shall also be provided with space heaters.

Each motor 250 horsepower and larger shall be provided with space heaters.

Space heaters for condensation prevention shall be rated 120 volt. Wattage shall be suitable for the particular frame size and type in accordance with the manufacturer's recommendation.

Space heater wire leads shall be brought out to an auxiliary conduit box on the motor. Box construction shall match main power conduit box.

F. Winding Protection

Winding Protective Devices:

a. Thermostat type protection shall be provided for each motor in accordance with the following:

1) Submersible motors and explosion proof motors.

2) Variable speed motors up to 25 horsepower.

b. Thermistor type protection shall be provided for each motor in accordance with the following:

1) Constant speed motors 50 horsepower and larger up to 200 horsepower.

2) Variable speed motors 30 horsepower and larger up to 200 horsepower.

c. Resistance temperature detectors shall be 100 ohm precision type with calibrated resistance-temperature characteristics. Detectors, two per phase, shall be positioned to detect highest winding temperature and located between coil sides in stator slots. Detector leads shall be wired to a separate NEMA 4X terminal box.

Thermostats shall be bi-metal disk or rod type embedded in the stator windings. Thermostat contacts shall be automatic reset type, rated 120 volt AC, 5 amps minimum opening on excessive temperature.

Thermistors embedded in each stator phase winding shall be in direct contact with the winding conductors. Each thermistor circuit shall be factory wired to 120 volt solid state control module mounted at the motor in a NEMA 4X box. The control module contacts shall be automatic reset type, rated 120 volt AC, 5 amps minimum opening on excessive temperature.

G. Bearing Temperature Protection

a. Bearing temperature detectors, RTD type similar to the winding detectors specified under this Section shall be provided on each bearing for horizontal motors and on the thrust bearing for vertical motors.

b. Each motor 250 horsepower and large shall be provided with stator and bearing temperature detectors.

H. Special Application

Cranes, elevators, hoists, and other devices complying with special safety codes shall be furnished complete with their control equipment, and with all accessories and safety devices for approved safe and efficient operation.

I. Single Phase Motors

Single phase motors requiring auxiliary starting resistors, capacitors or reactors and switching devices shall be furnished as combination units with such auxiliaries either incorporated within motor housings or housed in suitable enclosures, mounted upon motor frames. Each combination unit shall be mounted upon a single base and shall be provided with a single conduit box.

1.13 Fabrication / Assembling / Finishes

A. Painting

External Surfaces:

a. All severe duty motors shall have all external surfaces pretreated, primed and painted. External surfaces shall be pretreated so the surface is clean and free of contaminants. After pretreatment, the surface shall be primed with an oxide primer and then spray painted with a minimum of .003 inch thick epoxy polyamide and semi-gloss coating that is chemical, solvent, salt water, and acid resistant.

b. All other motors shall have external surfaces pretreated, primed and painted in accordance with the manufacturer's standard treatment.

Internal Surfaces:

c. All severe duty motors shall have all internal surfaces pretreated, primed and painted. Internal surfaces shall be pretreated so the surface is clean and free of contaminants. After pretreatment, the surface shall be primed with an oxide primer and then painted with an epoxy paint. Machined joints and threaded parts shall be coated with rust inhibiting compound.

d. All other motors shall have internal surfaces pretreated and primed in accordance with the manufacturer's standard treatment.

B. Hardware

All machined bolts and screws and other hardware shall be of the hex head type and shall be zinc plated.

Stainless steel hardware shall be used on severe duty motors.

1.14 Source Quality Control / Shop Tests

A. Certified Shop Tests:

Shop testing shall be performed on the motors at the manufacturer's plant prior to shipment. Shop test shall be in accordance with the latest revisions of NEMA MG1 and shall demonstrate that the equipment tested conforms to the requirements specified inclusive of the efficiency requirements stated in this Section.

The Contractor shall provide a shop test report. The report shall identify the tests performed and the results obtained.

Every motor rated less than 200 horsepower shall be given a routine test at the manufacturer's factory. The routine test shall consist of:

a. No Load Speed, Voltage and Current at rated frequency.

b. Locked Rotor Current.

c. Winding Resistance.

d. High Potential.

e. Bearing Inspection.

f. Measurement of Secondary Volts at standstill for wound-rotor units.

Motors rated at 200 horsepower or greater shall be given complete initial tests consisting of:

g. Full-load Heat Run.

h. Percent Slip.

i. No Load Speed, Voltage, Current and losses at rated frequency.

j. Full Load Current.

k. Locked rotor Torque.

l. Locked-rotor Current.

m. Breakdown Torque (Calculated).

n. Starting Torque (squirrel-cage).

o. Winding Resistance.

p. High Potential.

q. Sound.

r. Vibration.

s. Efficiencies at 125, 100, 75 and 50 percent of full load.

t. Power Factors at 125, 100, 75 and 50 percent of full load.

u. Bearing Inspection.

v. Measurement of Secondary Volts at collector rings for wound-rotor units.

B. Witnessed Shop Tests:

The Contractor shall perform witnessed shop tests in accordance with this Section and the Specifications.

When stated in this Section and the Specifications, motors shall be witness tested. Motors shall be given a complete test two weeks before and then retested in the presence of the witness.

When complete initial or witness tests are required for a group of the same type, rating and horsepower for the same application, all units of the group shall be subjected to the complete test, unless specifically stated otherwise in this Section or the Specifications.

EXECUTION

1.15 Examination / Preparation

A. Not Used

1.16 Installation

A. Motors

Motors shall be installed in accordance with manufacturer's instructions and recommendations.

Each motor shall be carefully and properly aligned with the driven equipment.

Equipment shall be secured to mounting surface with anchor bolts. Anchor bolts shall be provided meeting manufacturer's recommendations and of sufficient size and number to secure equipment.

Motor nameplates shall be installed for identification of equipment. Nameplates shall be provided in accordance with the requirements of Section 40 05 07- Hangers and Support for Process Piping.

1.17 Field Testing / Quality Control

A. Field Tests

After installation, motors shall be field tested for operation and conformance. The Contractor shall perform field tests in accordance with this Section, the Specifications and the Contract Drawings. The field tests shall be witnessed by the Engineer and certified by the Contractor.

Motor testing shall be performed by the manufacturer's representative, prior to energizing equipment.

Equipment shall not be energized without the permission of the City.

The testing shall be in accordance with the recommendations of the manufacturer's representative and shall include at a minimum the following:

a. Motors shall be checked to determine that they have been properly installed, lubricated and connected.

b. Motors shall be checked to determine they are not overloading, overheating or defective.

c. Motors shall be checked to determine they comply with performance and design parameters.

B. Manufacturer's Field Services

A qualified manufacturer's service representative shall assist in the installation of the motors, check the motor installation before it is placed into operation, assist in the performance of field tests, observe and assist initial operations and train the plant operations and maintenance staff in the care, operation and maintenance of the motors.

The Contractor shall provide equipment start-up services and training in accordance with this Section, the Specifications and the Contract Drawings.

The Contractor shall provide a field report from the manufacturer's representative for each visit to the site. The report shall include complete information on time, schedule, tasks performed, persons contacted, problems corrected, tests results, training, instruction and all other pertinent information.

The service representative shall sign in with the Engineer on each day they are at the site.

1.18 Startup / Demonstration

A. Acceptance Testing

The Contractor shall provide acceptance testing of the motors. All acceptance testing shall be performed by the testing firm, after the completion of the Field Tests specified under this Section. The acceptance testing shall be witnessed by the Engineer and certified by the Contractor.

Acceptance inspection shall be performed on each motor larger than 200 horsepower. Inspection shall include the following:

a. Electrical and grounding connections shall be inspected.

b. Shaft alignment, proper mounting and lubrication shall be inspected.

c. Ventilating air passageways shall be inspected for blockage.

d. Excessive noise shall be inspected.

e. Any overheating shall be inspected.

f. Correct rotation shall be inspected.

g. Protective detectors operation shall be checked.

h. Any excessive vibration shall be checked.

i. Space heater operation shall be checked.

Acceptance electrical testing shall be performed on each motor larger than 200 horsepower. Testing shall include the following:

j. Insulation resistance tests shall be performed.

k. Surge comparison testing shall be performed.

l. Vibration tests shall be performed.

m. Bearing insulation resistant tests on insulated bearings shall be performed.

n. Running current and voltage shall be measured and evaluated relative to load conditions and nameplate full-load amperes.

o. High-potential tests shall be performed.

p. For wound rotor motors, additional electrical testing at minimum and normal operating load points and at ring short shall be performed.

q. Motors shall be operated with driven equipment for a minimum of 48 continuous hours and rechecked for overheating and vibration.

All tests and values for AC and DC motors shall be in accordance with the manufacturer's recommendations and NETA ATS.

The Contractor shall provide an acceptance testing report. The report shall be in accordance with NETA ATS.

1.19 Adjusting / Protection / Cleanup

A. Not Used

END OF SECTION

SECTION 26 09 16 – ELECTRIC CONTROL RELAYS

APPURTENANT WORKS – IG/PC

26 09 16 ELECTRIC CONTROL RELAYS

GENERAL

1.01 Summary

A. Requirements for providing electric controls and relays. Electric controls and relays shall be provided in accordance with the requirements specified under this Section, the Specifications and the Contract Drawings.

B. Electrical control and relay systems shall be assembled using NEMA rated components. Components designed and built to International Electrotechnical Commission (IEC) standards are not recognized. Equipment designed, manufactured and labeled in compliance with IEC standards is not acceptable.

1.02 Payment

A. There is no separate payment provision for this Section.

1.03 Related Sections

A. All Common Works Specifications sections (Division 01) apply to this Section.

B. Requirements from the following Sections also apply to this Section:

Section 26 05 00 - Basic Electrical Requirements

Section 26 05 53 - Identification for Electrical Systems

1.04 References

A. Reference Standards

NEMA 250 - Enclosures for Electrical Equipment

UL-508A - Standard for Industrial Control Panels

UL-1203 - Standard for Explosion -proof and Dust-ignition-proof Electrical Equipment for use in Hazardous (Classified) locations

ANSI/ISA 12.12.01-2013 - Nonincentive Electrical Equipment for use in Class I and II, Division II Hazardous (Classified) locations

1.05 Description

A. Not Used

1.06 Quality Assurance

A. Not Used

1.07 Submittals

A. Shop Drawings

Contractor shall submit Shop Drawings and material specifications for the approval of the Engineer. Submittals shall include, but not be limited to:

a. Manufacturer's catalog cuts, technical information and details for the electric controls and relays.

B. Operations and Maintenance Manuals

Operations and Maintenance Manuals

a. Operation and Maintenance Manuals shall be submitted in accordance with the Specifications.

1.08 Delivery, Storage, and Handling

A. Electric controls and relays shall be delivered, stored and handled in accordance with the Specifications and the manufacturer's instructions

1.09 incidental materials, Special Tools, and Supplies

A. The Contractor shall furnish and deliver to the City, at that part of the site and at such time as the City may direct, spare parts listed in the table in Section 40 61 22 , Article 1.09, E.

B. Those spare parts to be furnished to the City by the Contractor shall include:

Three (3) spare relay blocks (1 each for Telemetry PLC, Flush System LCP, and Flush Motor Starter Panel)

Three (3) indicating light lenses (one of each color)

Three (3) LED lamps (one of each color)

C. The spare parts shall be listed in an index and packed in containers suitable for long term storage, bearing labels clearly designating the manufacturer's part number with complete information for use and reordering.

1.10 Special Warranty Provisions / Guarantee Periods

A. Not Used

PRODUCTS

1.11 Manufacturers

A. Control components shall be manufactured by:

Eaton, Beachwood, OH

The Square D Company, Andover, MA

Siemens, Washington, DC

General Electric Company, Stamford, CT

Allen-Bradley, Milwaukee, WI

Or approved equal.

1.12 Materials / Equipment

A. Pilot Devices

General

a. All pilot devices shall be provided with a legend plate. Legend plates shall have a white background and black lettering and indicate the function of the respective pilot device. The text shown on the Drawings or indicated in the specifications shall be used as the basis for legend plate engraving (i.e. HAND-OFF-AUTO, RUN, EMERGENCY STOP, etc.).

b. All pilot devices shall be selected and properly installed to maintain the NEMA 250 rating of the enclosure in which they are installed. All pilot devices shall be UL 508 Listed.

c. All pilot devices shall be 30.5mm in diameter, unless otherwise indicated. 22mm devices are not acceptable.

d. Pilot devices for all electrical equipment under this Contract shall be of the same type and manufacturer unless otherwise specified herein or indicated on the Drawings.

Pushbuttons

e. Pushbuttons shall be non-illuminated, black in color, and have momentary style operation unless otherwise indicated on the Drawings.

f. Pushbuttons shall have the quantity of normally closed and/or normally open contacts as indicated on the Drawings and as required. In addition to the required contacts, one (1) spare normally open and one (1) spare normally closed contact shall be installed at each pushbutton. Contacts shall be rated for 5A at 250VAC/DC (minimum), but no less than required for the application.

g. Pushbuttons shall be provided with a full guard around the perimeter of the button. Where a lockout style pushbutton is specified or indicated on the Drawings, provide a padlockable guard.

Selector Switches

h. Selector switches shall be non-illuminated, black in color, and have the number of maintained positions as indicated on the Drawings and as required. Handles shall be the extended type that provide a greater surface area for operation.

i. Selector switches shall have the quantity of normally closed and/or normally open contacts as indicated on the Drawings and as required. In addition to the required contacts, one (1) spare normally open and one (1) spare normally closed contact shall be installed at each selector switch. Contacts shall be rated for 5A at 250VAC/DC (minimum), but no less than required for the application.

j. Where indicated in the Drawings or Specifications, provide spring return positions.

k. Selector switches shall be provided with an indexing component that fits into the keyed portion of the cutout for the device and prevents the switch from spinning when operated.

Indicating Lights

l. Indicating lights shall be LED type, with the proper voltage rating to suit the application, and push-to-test feature.

m. Indicating light lens colors shall be as required in equipment specifications and/or as indicated on the Drawings. If lens colors are not indicated, the following colors shall be used:

Color	Designation
Red	"Run", "On", “Open”
Green	"Off", “Closed”
Amber	"Alarm", "Fail"
White	“Control Power On”

Emergency Stop and Tagline Switches

n. Emergency stop switches shall be non-illuminated, red in color, with a minimum 35mm diameter mushroom head. Once activated, switch shall maintain its position and require a manual pull to release/reset.

o. Tagline switches shall have a plunger that activates upon tension from the associated safety cable. Once activated, switch shall maintain its position and require a manual release/reset.

p. Emergency stop and tagline switches shall have the quantity of normally closed and/or normally open contacts as indicated on the Drawings and as required. In addition to the required contacts, one (1) spare normally open and one (1) spare normally closed contact shall be installed at each switch. Contacts shall be rated for 5A at 250VAC/DC (minimum), but no less than required for the application.

B. Relays and Timers

General

a. Relays and timers shall be furnished with an integral pilot light for positive indication of coil energization.

b. Relays and timers shall have tubular pin style terminals with matching 11-pin DIN rail mount socket. Spade or blade style terminals are not acceptable.

c. Relays and timers for all electrical equipment under this Contract shall be of the same type and manufacturer unless otherwise specified herein or indicated on the Drawings.

Control and Pilot Relays

d. Relays shall have a clear or translucent housing that allows the contacts to be visually inspected without disassembly.

e. Relays shall have coil voltage as required to suit the application and/or as indicated on the Drawings.

f. Relays shall be provided with contacts rated for 10A (resistive), minimum, at 120/240 VAC and 28 VDC. Relays shall have 3-pole, double-throw (3PDT) contact arrangement.

Time Delay Relays

g. Timers delay relays shall utilize electronic timing technology. Mechanical timing devices are not acceptable.

h. Relays shall have coil voltage as required to suit the application and/or as indicated on the Drawings.

i. Relays shall be provided with contacts rated for 10A (resistive), minimum, at 120/240 VAC and 28 VDC. Relays shall have double-pole double-throw (DPDT) contact arrangement.

j. Time delay ranges shall be as indicated on the Drawings and/or as required to suit the application. Timing range shall be adjustable from the front of the relay. On delay and off delay timer configurations shall be provided as indicated on the Drawings and/or as required to suit the application.

C. Control Terminal Blocks

Control terminal blocks shall be assembled on non-current carrying galvanized steel DIN mounting rails securely bolted to the enclosure or subpanel. Terminals shall be tubular screw type with pressure plate that will accommodate wire size range of #16 – #8 AWG.

Control terminal blocks shall be single tier with a minimum rating of 600 volts and 20A. Separate terminal strips shall be provided for each type of control used (i.e. 120VAC vs. 24VDC). Quantity of terminals shall be provided as required to suit the application. In addition, there shall be a sufficient quantity of terminals for the termination of all spare conductors.

Terminals shall be marked with a permanent, continuous marking strip, with each terminal numbered. One side of each terminal shall be reserved exclusively for incoming field conductors. Common connections and jumpers required for internal wiring shall not be made on the field side of the terminal.

D. Local Control Panels

Local control stations shall be furnished and installed complete with pushbuttons, selector switches, indicating lights, and other devices as indicated on the Drawings.

Specific devices installed in local control stations shall be provided in accordance with the requirements specified elsewhere in this Section.

In non-hazardous locations, local control stations shall be furnished with the following enclosure type and material of construction, dependent upon the designation of the area in which they are to be installed. Area designations are indicated on the Drawings.

Area Designation	Enclosure Type and Material
Indoor Dry Process Area	NEMA 12, Die Cast Zinc
Indoor Dry Non-process Area	NEMA 12, Die Cast Zinc
All Outdoor Areas	NEMA 4X, Type 304 Stainless Steel

Local control stations for use in non-hazardous locations shall be UL-508 Listed.

a. Provide a nameplate on each local control station in accordance with Section 26 05 53 – Identification for Electrical Systems. The name and/or number of the equipment associated with each control station shall be engraved on the nameplate, followed by the words “LOCAL CONTROL STATION.”

1.13 Fabrication / Assembling / Finishes

A. Not Used

1.14 Source Quality Control / Shop Tests

A. Not Used

EXECUTION

1.15 Examination / Preparation

A. Not Used

1.16 Installation

A. Local control stations shall be provided in the enclosure type and material of construction required for the area in which it is installed. Reference the requirements in the Products Part of this section, and the area designations indicated on the Drawings.

B. All control components shall be mounted in a manner that will permit servicing, adjustment, testing, and removal without disconnecting, moving, or removing any other component. Components mounted on the inside of panels shall be mounted on removable plates and not directly to the enclosure. Mounting shall be rigid and stable unless shock mounting is required otherwise by the manufacturer to protect equipment from vibration. Component's mounting shall be oriented in accordance with the component manufacturer's and industries' standard practices.

C. Pilot devices shall be properly bonded to the equipment enclosure door where they are installed. If proper bonding cannot be achieved through the locknuts that affix the device in place, a green colored bonding screw shall be provided on the pilot device. The bonding screw shall be bonded to the equipment enclosure through the use of an insulated green bonding conductor.

D. Local control station covers shall be bonded to the local control station enclosure through the use of an insulated green bonding conductor.

E. Wiring to devices at each local control station shall be provided with enough slack to permit the local control station cover to be removed and pulled at least 6 inches away from the enclosure.

F. Terminal strips, relays, timers, and similar devices shall not be installed on the rear of the panel/cabinet doors. Terminal strips, relays, timers, and similar devices shall not be installed on the side walls of panel/cabinet interiors without written permission from the Engineer.

1.17 Field Testing / Quality Control

A. Not Used

1.18 Startup / Demonstration

A. Not Used

1.19 Adjusting / Protection / Cleanup

A. Not Used

END OF SECTION

NO TEXT ON THIS PAGE

26 28 13 LOW VOLTAGE FUSES

GENERAL

1.01 Summary

A. Requirements for providing low-voltage fuses. Low-Voltage Fuses shall be provided in accordance with the requirements of the Contract Drawings and Specifications.

B. Fuses shall be suitable for use with power circuits.

1.02 Payment

A. There is no separate payment provision for this Section.

1.03 Related Sections

A. All Common Works Specifications sections (Division 01) apply to this Section.

1.04 References

A. Definitions

Low-voltage as used in this Section and other Specifications shall mean all equipment, conductors, insulation systems and accessories intended for operation within the 600 Volt Class.

B. Reference Standards: Low-voltage fuses shall comply with the latest applicable provisions and recommendations of the following even if not specifically listed in this Section:

UL 248- Low-voltage Fuses.

NEMA FU1 - Low-Voltage Cartridge Fuses.

1.05 Description

A. Not Used

1.06 Quality Assurance

Low-voltage fuses shall be designed, built and tested in accordance with UL 248.

1.07 Submittals

A. Contractor shall submit Shop Drawings and material specifications for the approval of the Engineer. Submittals shall include, but not be limited to:

Manufacturer's catalog cuts for the fuses proposed for use with specifications and other data required to demonstrate compliance with the specified requirements.

Time-current curves for the fuses proposed for use.

B. Reports

Field Test Reports shall be submitted.

Manufacturer's site visit report shall be submitted.

C. Operation and Maintenance Manual

Operation and Maintenance Manuals shall be submitted in accordance with this Section and the Specifications.

1.08 Delivery, Storage, and Handling

A. Fuses shall be delivered, stored and handled in accordance with this Section, the Specifications and the manufacturer's recommendations.

1.09 Spare Parts, Special Tools, and Supplies

A. Spares

The Contractor shall furnish and deliver to the Engineer, at that part of the site and at such time as the Engineer may direct, spare parts listed in the table in Section 40 61 22 , Article 1.09, E.

The spare fuses shall be listed in an index and packed in containers suitable for long term storage, bearing labels clearly designating the manufacturer's part number with complete information for use and reordering.

Spare fuses shall include at a minimum the following:

a. 10 percent of each rating used.

b. Minimum of three of each rating.

1.10 Special Warranty Provisions / Guarantee Periods

A. Not Used

PRODUCTS

1.11 Manufacturers

A. Low-voltage fuses shall be as manufactured by:

Eaton Bussmann, Ellisville, MO;

Mersen Ferraz Shawmut, San Francisco, CA;

Littlefuse, Chicago, IL;

Or approved equal.

1.12 Materials / Equipment

A. General:

Fuses shall be compatible with the system operating voltage shown on the Contract Drawings.

Low-voltage fuse ampere ratings shall be as shown on the Contract Drawings.

B. Low-voltage Fuses:

Low-voltage fuses shall be current limiting, time delay type. Low-voltage fuses shall have a 200,000 RMS symmetrical ampere interrupting rating.

Low-voltage fuses with current ratings up to 600 ampere shall be UL class RK1.

Low-voltage fuses with current ratings greater than 600 ampere shall be UL class L.

1.13 Fabrication / Assembling / Finishes

A. Not Used

1.14 Source Quality Control / Shop Tests

A. Not Used

EXECUTION

1.15 Examination / Preparation

A. Not Used

1.16 Installation

A. Fuses shall be installed within equipment in accordance with the manufacturer's recommendations.

1.17 Field Testing / Quality Control

A. Not Used

1.18 Startup / Demonstration

A. Not Used

1.19 Adjusting / Protection / Cleanup

A. Not Used

END OF SECTION

NO TEXT ON THIS PAGE

SECTION 26 29 13 – ENCLOSED CONTROLLERS

APPURTENANT WORKS – IG/PC

26 29 13 ENCLOSED CONTROLLERS

GENERAL

1.01 Summary

A. Requirements for providing enclosed controllers. Enclosed controllers shall be provided in accordance with the requirements specified under this Section, the Specifications and the Contract Drawings.

1.02 Payment

A. There is no separate payment provision for this Section.

1.03 Related Sections

A. All Common Works Specifications sections (Division 01) apply to this Section.

B. Requirements from the following Sections also apply to this Section:

Section 26 05 53 - Identification for Electrical Systems

1.04 References

A. Definitions

Low-voltage as used in this Section and the Specifications shall mean all equipment, conductors, insulation systems and accessories intended for operation within the 600 Volt Class.

B. Reference Standards

NYCEC - Electrical Code of the City of New York.

UL 98 - Enclosed and Dead-Front Switches

UL 508- Industrial Control Equipment

UL 489- Molded-Case Circuit Breakers, Molded-Case Switches, and Circuit Breaker Enclosures.

NEMA KS-1 - Heavy Duty and Dead-Front Enclosed Switches

NEMA ICS - Industrial Control and Systems General Requirements

NEMA ICS 2 - Industrial Control and Systems, Controllers, Contactors and Overload Relays rated 600V.

NEMA ICS 5 - Industrial Control and Systems Control-Circuit and Pilot Devices

NEMA ICS 6 - Industrial Control and Systems Enclosures

1.05 Description

A. Not Used

1.06 Quality Assurance

A. Unless otherwise shown on the Contract Drawings, or directed by the standards and codes referenced under this Section, the Contractor shall provide for each low-voltage motor or other power device, complete equipment for starting, stopping and control.

B. The starting, stopping and control equipment shall be provided with features of protection, current limitation, functioning and be complete with all accessories, appurtenances and supporting structures.

C. Control equipment shall be UL listed and properly designed with relation to the characteristics of operation of the motor and or device controlled.

D. Unless otherwise shown on the Contract Drawings or stated in the Specifications, each motor shall be provided with control equipment consisting of apparatus as follows:

Motors of 1/4 HP or less may, in the absence of other requirements, be controlled by a manual motor starter having thermal overload protection at all times.

Motors larger than 1/4 HP shall be controlled by a magnetic motor starter.

For wound rotor motors of all horsepower ratings, the primary and secondary shall be controlled by a magnetic motor starter or as shown on the Contract Drawings.

Multiple speed squirrel cage motors, shall be controlled by a magnetic motor starter. The magnetic motor starter shall provide adequate protection of the motor at each speed. A line establishing contactor shall be provided for each motor speed.

E. Each motor shall include overload protection based on latest standards.

1.07 Submittals

A. Shop Drawings

Contractor shall submit Shop Drawings and material specifications for the approval of the Engineer. Submittals shall include, but not be limited to:

a. Manufacturer's catalog cuts, technical information and enclosure details for the enclosed controllers.

B. Operations and Maintenance Manuals

Operations and Maintenance Manuals

a. Operation and Maintenance Manuals shall be submitted in accordance with the Specifications.

1.08 Delivery, Storage, and Handling

A. Enclosed controllers shall be delivered, stored and handled in accordance with the Specifications and the manufacturer's instructions

1.09 Spare Parts, Special Tools, and Supplies

A. The Contractor shall furnish and deliver to the Engineer, at that part of the site and at such time as the Engineer may direct, spare parts listed in the table in Section 40 61 22 , Article 1.09, E.

B. The spare parts shall be listed in an index and packed in containers suitable for long term storage, bearing labels clearly designating the manufacturer's part number with complete information for use and reordering.

1.10 Special Warranty Provisions / Guarantee Periods

A. Not Used

PRODUCTS

1.11 Manufacturers

A. Switching devices shall be as manufactured by:

Cutler-Hammer, Melville, NY

General Electric Company, Stamford, CT

Siemens, Washington, DC

Or approved equal.

B. Magnetic motor starters shall be as manufactured by:

Cutler-Hammer, Melville, NY

General Electric Company, Stamford, CT

Siemens, Washington, DC

Or approved equal

C. Manual motor starters shall be as manufactured by:

Cutler-Hammer, Melville, NY

General Electric Company, Stamford, CT

Siemens, Washington, DC

Or approved equal

D. Control stations shall be as manufactured by:

Cutler-Hammer, Melville, NY

General Electric Company, Stamford, CT

Siemens, Washington, DC

Or approved equal

1.12 Materials / Equipment

A. Switching Devices

Switching devices shall be low-voltage devices provided in accordance with the details shown on the Contract Drawings. The switching devices required under this Section shall be the disconnect switch and circuit breaker types.

Switching devices shall be enclosed in NEMA type enclosures in accordance with the requirements specified under this Section, the Specifications and the Contract Drawings.

Switching device line and load terminals shall be provided with shields to prevent accidental contact with them. In addition, instrument probe holes shall be provided within the shields to

permit investigation of the state of the terminals, by authorized personnel and approved procedures.

a. Disconnect switch type switching devices shall be in accordance with the following:

1) Switches shall be heavy duty type with number of poles, voltage and current ratings as shown on the Contract Drawings.

2) Switches shall be capable of interrupting the full rated current at full rated voltage.

3) Switch enclosure shall be provided with a viewing window through which it shall be permissible to observe the state of the main contacts and surge protective devices when provided.

4) Where specifically shown on the Contract Drawings, disconnect switches shall be complete with fuses, surge protective devices and remote operation.

5) Switches shall be the quick make and quick break type covered with an arc resisting barrier. The switch shall be provided with provision for locking in either open or closed position. The ratings shall be as follows:

Switch Rating in Amperes	**Motor Horsepower**	
	208-240 Volts	**480Volts**
60	Over 5 to 15	Over 5 to 30
100	Over 15 to 25	Over 30 to 60
200	Over 30 to 50	Over 60 to 125
400	Over 50 to 75	Over 125 to 200

b. Circuit breaker type switching devices shall be in accordance with the following:

1) Circuit breakers shall be the molded case type with number of poles, voltage and current ratings as shown on the Contract Drawings.

2) Breakers shall be manually or remotely operated thermal magnetic or solid state type, including inverse-time overload and instantaneous short-circuit protection. Contacts shall be nonwelding silver alloy and arc extinction shall be accomplished by means of arc chutes.

3) Breakers shall have 100 amp frames as a minimum. Overload protection shall be provided on all poles, with trip settings as shown on the Contract Drawings.

4) Breakers with frame sizes 225 amp or larger shall have interchangeable trip units and adjustable magnetic trip elements.

5) Breakers shall be operated by a toggle-type handle and shall have a quick-make/quick-break over-center switching mechanism that is mechanically trip-free. Automatic tripping of the breaker shall be clearly indicated by the handle position.

6) Breaker enclosures shall be equipped with an external lockable handle with provision for locking in the closed or open position.

7) Where shown on the Contract Drawings breakers shall be provided with electronic trip units. Electronic trip units shall include long time, short time, instantaneous and ground fault settings as minimum.

8) Where specifically shown on the Contract Drawings breakers shall be provided with zone interlocking features, shunt trips, provisions for annunciation of status and auxiliary devices.

B. Motor Starters

Magnetic

1) Magnetic motor starters shall be provided complete with fused control power transformer, pilot devices, auxiliary contacts and accessories as shown on the Contract Drawings or stated in the Detailed Specifications.

2) Magnetic motor starters shall be enclosed in NEMA type enclosures in accordance with the requirements specified under this Section. The starter shall be combination type. The enclosure shall be equipped with an external operable, pad lockable handle, arranged so that it is impossible to open the door unless the breaker is open.

3) The starter shall be magnetic coil operated, and shall include a magnetic or solid state motor circuit protector with trip unit range adjustable from 700 to 1300 percent of full load.

4) The combination starters shall be suitable for interrupting the available low-voltage short circuit infeed at the line terminals of the enclosure.

5) Magnetic contactors shall be 3 pole, single throw, 60 Hz with auxiliary contacts for under-voltage protection. Contactors shall be mounted upon steel bases with insulated mountings or upon

bases of insulating material. Contactors shall be provided with necessary barriers and arc chutes.

6) Contactors shall be NEMA rated as follows:

NEMA Size of Contactor	Motor Horsepower	
	208-240 Volts	480Volts
1	¼ to 71/2	¼ to 10
2	Over 71/2 to 10	Over 10 to 25
3	Over 15 to 25	Over 25 to 50
4	Over 30 to 40	Over 50 to 100
5	Over 70 to 75	Over 100 to 200

7) Contactors in Sizes 1 through 4 shall have double break, silver to silver main contacts. Contactors in Size 5 shall have silver plated tips which close with rolling action and which have self-aligning and self-cleaning features. Auxiliary and interlocking contacts for all sizes shall be of the silver button type. All contact tips shall be easily renewable. Flexible shunts shall be tinned copper braid or tinned extra flexible copper cable.

8) Overload relays shall be of the ambient temperature compensated bi-metallic or solid-state type with interchangeable sensors and manual reset feature. Relay shall include a normally open auxiliary contact for remote alarm purposes. Sensors for overload relays shall be selected to match full load currents of the motors to allow motor operation at maximum safe loads without damage to equipment. Full load current data shall be obtained from nameplates of motors actually installed.

9) Pilot devices shall be heavy duty type, rated 10 amp continuous. Pushbuttons, selector switches, indicating lights, and other devices shall be located on the starter enclosure. Indicating lights shall be push-to-test, LED, transformer type with 12 volt secondaries.

10) Relays shall be standard, latching type and pneumatic or solid state time delay type. Relays shall be provided with contacts rated 10 amp with number as required.

11) Special overload protection shall be provided where definite purpose motors cannot be protected by standard thermal overload relay applications.

Manual

b. Manual motor starters shall be provided complete with pilot devices as shown on the Contract Drawings.

c. Manual motor starters shall be enclosed in NEMA type enclosures in accordance with the requirements specified under this Section.

d. Manual motor starters shall be toggle operated, NEMA horsepower rated, single phase type with thermal overload protection unless shown otherwise on the Contract Drawings. Pilot devices when required shall be in accordance with the requirements specified under this Section.

e. Where shown on the Contract Drawings, manual motor starters shall be low-voltage, three phase type without overload protection for use as manual starting disconnect switches. The switches shall be NEMA size 0 or 1 horsepower rated, as required for the application intended.

Control Stations

f. Control Stations shall be provided in accordance with the details on the Contract Drawings.

g. Control Stations shall be enclosed in NEMA type enclosures in accordance with the requirements specified under this Section.

h. Control stations shall be industrial, heavy duty, oil tight construction with clearly marked legend plates. Stations shall have operating devices as shown on the Contract Drawings.

i. Contact ratings shall be 10 amp minimum. All indicating lights shall be LED, transformer type, lens color shall be as shown on the Contract Drawings.

Enclosures

j. Enclosures shall be provided for the enclosed controllers.

k. Enclosures located indoors in dry, dusty areas shall be gasketed and shall be constructed of 14-gauge sheet steel.

l. Cabinet type enclosures shall include hinged and gasketed front doors.

m. Enclosures shall be provided in accordance with NEMA requirements as required for the area classifications indicated on the Contract Drawings.

1) For dry, dusty locations, enclosures shall meet NEMA 12 requirements.

2) For wet and corrosive locations, enclosures shall meet NEMA 4X requirements. NEMA 4X enclosures shall be fabricated from 316 stainless steel.

3) Enclosures within hazardous locations shall meet Class I, Division 1, Group D requirements. Hazardous enclosures shall be fabricated from cast metal.

1.13 Fabrication / Assembling / Finishes

A. Not Used

1.14 Source Quality Control / Shop Tests

A. Not Used

EXECUTION

1.15 Examination / Preparation

A. Not Used

1.16 Installation

A. Equipment shall be mounted so that sufficient access and working space is provided for ready and safe operation and maintenance.

B. Equipment shall be securely fastened to walls or other surfaces on which they are mounted.

C. Independent supports shall be provided where no wall or other surface exists.

D. Enclosed controllers shall be installed in conformance with the NYCEC.

1.17 Field Testing / Quality Control

A. Not Used

1.18 Startup / Demonstration

A. Not Used

1.19 Adjusting / Protection / Cleanup

A. Not Used

END OF SECTION

NO TEXT ON THIS PAGE

26 29 13.16 LOW-VOLTAGE ENCLOSED MOTOR CONTROLLERS – REDUCED VOLTAGE

GENERAL

1.01 Summary

A. The Contractor shall furnish and install separately mounted, individual motor controllers for 120-volt single phase, and 208 and 480-volt three phase motors as specified herein and indicated on the Drawings. Individual motor controllers specified in this Section include magnetic motor starters, manual motor starters.).

1.02 Payment

A. There is no separate payment provision for this Section.

1.03 Related Sections

A. Section 26 05 00 – Basic Electrical Requirements

B. Section 26 05 20 – Low -Voltage Wires, Cables and Accessories.

C. Section 26 05 53 – Identification for Electrical Systems

D. Section 26 09 16 – Electric Controls and Relays

1.04 References

A. Reference Standards

UL 508 – Standard for Industrial Panels:

NEMA 250 – Enclosures for Electrical Equipment

1.05 Description

A. Not Used

1.06 Quality Assurance

A. Not Used

1.07 Submittals

A. In accordance with the procedures and requirements set forth herein, the Contractor shall obtain from the equipment manufacturer and submit the following:

Shop Drawings.

Spare Parts in accordance with Article 1.09 of this Section.

Reports of Certified Shop and Field Tests.

Operation and Maintenance Manuals.

B. Each submittal shall be identified by the applicable specification section

C. Shop Drawing Requirements:

Each submittal shall be complete in all respects, incorporating all information and data listed herein and all additional information required for evaluation of the proposed equipment's compliance with the Contract Documents.

Partial, incomplete, or illegible submittals will be returned to the Contractor without review for resubmittal.

Shop drawings shall include but not be limited to:

a. A Compliance, Deviations, and Exceptions (CD&E) letter. If the shop drawings are submitted without this CD&E letter, the submittal will be rejected. The letter shall include all comments, deviations and exceptions taken to the Drawings and Specifications by the Contractor AND Equipment Manufacturer/Supplier. This letter shall include a copy of this specification section. In the left margin beside each and every paragraph/item, a letter "C", "D", or "E" shall be typed or written in. The letter "C" shall be for full compliance with the requirement. The letter "D" shall be for a deviation from the requirement. The letter "E" shall be for taking exception to a requirement. Any requirements with the letter "D" or "E" beside them shall be provided with a full typewritten explanation of the deviation/exception. Handwritten explanation of the deviations/exceptions is not acceptable. The CD&E letter shall also address deviations, and exceptions taken to each Drawing related to this Specification Section.

b. Product data sheets.

c. Complete layout and installation drawings with clearly marked dimensions for each type/size/rating of individual motor controller.

d. Custom wiring diagrams for each individual motor controller. Standard wiring diagrams that are not custom created by the manufacturer for the individual motor controllers for this project are not acceptable. One wiring diagram which is typical for an equipment group is not acceptable. Each wiring diagram shall include wire identification and terminal numbers. Indicate all devices, regardless of their physical location, on the diagrams. Identify on each respective wiring diagram specific equipment names and equipment numbers consistent with those indicated on the Drawings.

e. Bill of material list for each individual motor controller.

f. Nameplate schedule for each individual motor controller.

g. Manufacturer’s installation instructions.

h. Time-current curves for each type and size protective device if requested by the Engineer.

The shop drawing information shall be complete and organized in such a way that the Engineer can determine if the requirements of these Specifications are being met. Copies of technical bulletins, technical data sheets from "soft-cover" catalogs, and similar information which is

"highlighted" or somehow identifies the specific equipment items that the Contractor intends to provide are acceptable and shall be submitted.

Prior to completion and final acceptance of the project, the Contractor shall furnish and install "as-built" wiring diagrams for individual motor controller. These final drawings shall be plastic laminated and securely placed inside each individual motor controller unit door and included in the O&M manuals

1.08 Delivery, Storage, and Handling

A. Not Used

1.09 Spare Parts, Special Tools, and Supplies

A. The Contractor shall furnish the following additional spare parts listed in the table in Section 40 61 22 , Article 1.09, E. This spare parts include:

1. One (1) solid state overload relay for each type, size, and rating used.
2. One (1) motor circuit protector & motor contactor for each type, size, and rating used.
3. One (1) spare control power transformer for each type and size used.
4. Two (2) spare fuses for each size and type used.

B. The spare parts shall be packed in containers suitable for long term storage, bearing labels clearly designating the contents and the pieces of equipment for which they are intended.

C. Spare parts shall be delivered at the same time as the equipment to which they pertain. The Contractor shall properly store and safeguard such spare parts until completion of the work, at which time they shall be delivered to the City.

D. Spare parts lists, included with the shop drawing submittal, shall indicate specific sizes, quantities, and part numbers of the items to be furnished. Terms such as "1 lot of packing material" are not acceptable.

E. Parts shall be completely identified with a numerical system to facilitate parts inventory control and stocking. Each part shall be properly identified by a separate number. Those parts which are identical for more than one size, shall have the same parts number.

1.10 Special Warranty Provisions / Guarantee Periods

A. Not Used

PRODUCTS

1.11 Manufacturers

A. The equipment covered by this Specification is intended to be standard equipment of proven performance as manufactured by reputable concerns. Equipment shall be designed, constructed and installed in accordance with the best practices of the trade, and shall operate satisfactorily when installed as shown on the Drawings.

B. Individual Magnetic Motor Starters:

Individual magnetic motor starters shall be combination type complete with motor circuit protectors (MCP's). Starters shall be rated 480 VAC, 3-pole, sized for the intended load unless otherwise indicated. In no case shall a starter smaller than a NEMA Size 1 be used. Each starter shall be furnished with a minimum of two spare auxiliary contacts.

In non-hazardous locations, motor starters shall be furnished with the following enclosure type and material of construction, dependent upon the designation of the area in which they are to be installed. Area designations are indicated on the Drawings.

Area Designation	Enclosure Type and Material
Indoor Wet Process Area	NEMA 4X, Type 304 Stainless Steel
Indoor Dry Process Area	NEMA 12, Painted Steel
Indoor Dry Non-process Area	NEMA 1, Painted Steel
Indoor Type 1 Chemical Storage/Transfer Area	NEMA 4X, Fiberglass
Indoor Type 2 Chemical Storage/Transfer Area	NEMA 4X, Type 304 Stainless Steel
All Outdoor Areas	NEMA 4X, Type 304 Stainless Steel

In hazardous locations, motor starters shall be furnished with the following enclosure type and material of construction, dependent upon the classification of the area in which they are to be installed. Area classifications are indicated on the Drawings.

Area Classification	Enclosure Type and Material
Class I, Division 1, Group D	NEMA 7, Die Cast Aluminum
Class I, Division 2, Group D	NEMA 7, Die Cast Aluminum
Class II, Division 1, Group F	NEMA 9, Die Cast Aluminum
Class II, Division 2, Group F	NEMA 9, Die Cast Aluminum

Starters shall be provided with all coils and controls for 120 VAC operation, unless otherwise indicated on the Drawings.

The motor controller manufacturer is advised to review the total Contract Documents for additional requirements for space heaters, power factor correction capacitors, and similar equipment which may not be specified in this Division or shown on the Drawings. Control power transformers shall be fused on both the primary and secondary sides. The minimum control power transformer VA requirements are as shown below. Control power transformers shall be sized as required for the connected loads, plus 25% spare capacity.

a. Size 1-150 VA

b. Size 2-150 VA

c. Size 3-200 VA

d. Size 4-300 VA

e. Size 5-500 VA

Each starter shall be supplied with a manual reset overload relay. Manual reset shall be accomplished by a door mounted overload reset pushbutton. The relays shall be solid state type, with at least one isolated normally open and one isolated normally closed auxiliary contact that operates when a trip condition has occurred. Relays shall be self-powered, have a visible trip indicator, have a trip test function, and have selectable Class 10 or 20 operation. Overload relays shall be set for Class 10 operation unless otherwise directed by the Engineer. Overload relay shall have phase loss protection built in to trip the unit and protect the motor against single phasing. The Contractor shall provide the overload relay model with the correct current range for each application. Overload relay shall have adjustable current range dial. Eutectic alloy and bi-metallic type overload relays are not acceptable.

Control Devices

f. Furnish and install control devices as required and/or shown on the Drawings. The following control devices shall be provided as specified in Section 26 09 16 – Electric Controls and Relays:

1) Pilot devices (switches, indicating lights, etc.)

2) Relays and timers

3) Control Terminal blocks

All control wiring shall be No. 14 AWG (minimum) labeled at each end in accordance with the wiring numbers shown on the accepted shop drawings. Power wiring shall be sized to suit the maximum horsepower rating of unit; No. 12 AWG (minimum). Wiring shall be type MTW rated for 105ºC. Wire color coding shall be as specified in Section 26 05 19 – Low-Voltage Conductors and Cables.

Each motor starter coil shall be equipped with a surge-suppression device for protection of the solid-state equipment (e.g. programmable logic controller) wired as part of the control circuit.

Individual magnetic motor starters shall be as manufactured by Eaton using NEMA rated Freedom Series starters and contactors, the General Electric Company equivalent, the Square D Company equivalent, or Siemens Energy & Automation, Inc. equivalent.

C. Individual Manual Motor Starters:

Individual manual motor starters in enclosures as specified above shall be furnished and installed for outdoor and indoor exposed work. Furnish and install manual motor starters in outlet boxes with flush wall plates as required for concealed work.

Furnish and install manual motor starters with pilot lights and overload heater elements of correct rating based on motor nameplate data.

Manual motor starters shall be equipped with either a push button or toggle operator with reset device or mechanism accessible without opening the enclosure.

Individual manual motor starters for motors one (1) horsepower and less shall be Eaton Type MS, the General Electric Company equivalent, the Square D Company equivalent, Allen-Bradley equivalent, or Siemens Energy & Automation, Inc. equivalent.

Individual manual motor starters for integral horsepower motors shall be Eaton Type B100 or B101, the General Electric Company equivalents, the Square D Company equivalents, Allen-Bradley equivalent, or Siemens Energy and Automation, Inc. equivalents.

D. Reduced Voltage Solid State Starters:

The solid-state reduced-voltage starter shall be UL Listed. The solid-state reduced-voltage starter shall be an integrated unit with power SCRs, logic board, an integral paralleling bypass contactor, and electronic overload relay enclosed in a single molded housing. The starter shall meet all applicable requirements of this Section and other sections in this Division.

The RVSS shall be suitable for continuous operation at 115% of its continuous ampere rating. The Contractor is fully responsible for the review of the mechanical specifications to determine specified motor speed, horsepower and full load amperes. This information is available in the applicable mechanical specifications for each piece of equipment (e.g. backwash blower).

The RVSS shall be suitable for the following environmental conditions:

a. Operating Temperature: 0-50 degrees C

b. Humidity: 0-95 percent non-condensing.

c. Altitude: up to 3,300 feet.

The RVSS shall be suitable for operation on a 480 VAC, 3-phase, 60 Hertz system.

The SCR-based power section shall consist of six (6) back-to-back SCRs and shall be rated for a minimum peak inverse voltage rating of 1500 volts PIV. Units using triacs or SCR/diode combinations are not acceptable. Resistor/capacitor snubber networks shall be used to prevent false firing of SCRs due to dv/dt effects.

The paralleling run bypass contactor shall energize when the motor reaches full speed and close/open under one (1) times motor current.

The starter shall be provided with electronic overload protection as standard and shall be based on an inverse time-current algorithm. Overload protection shall be capable of being disabled during ramp start for long acceleration loads via a DIP switch setting on the device keypad. Overload protection shall be adjusted via the device keypad and shall have a motor full load ampere adjustment from 30 to 100% of the maximum continuous ampere rating of the starter. The starter shall have selectable overload class setting of 5, 10, 20 or 30 via a DIP switch setting on the device keypad. The starter shall be capable of either an electronic or mechanical reset after a fault. Units using bimetal or eutectic alloy overload relays are not acceptable.

The starter shall provide protection against the following conditions:

d. Improper line-side phase rotation. The starter shall stop the motor load if a line-side phase rotation other than A-B-C exists.

e. Phase loss or unbalanced conditions. The starter shall stop the motor load if a 50% current differential between any two phases is encountered.

f. Motor stall conditions.

g. Motor jam conditions.

The starter shall be provided with a form C normally open (NO), normally closed (NC) contact that shall change state when a fault condition exists. The contacts shall be rated 60 VA (resistive load) and 20 VA (inductive load). In addition, an LED display on the device keypad shall indicate the type of fault (Overtemp, Phase Loss, Jam, Stall, Phase Reversal, and Overload).

The starter shall be provided with an unpowered internal “Run” contact rated for 24VDC or 120 VAC operation.

The following control function adjustments on the device keypad shall be provided:

h. Selectable Torque Ramp Start or Current Limit Start

i. Adjustable Kick Start Time, 0-2 seconds

j. Adjustable Kick Start torque, 0-90%

k. Adjustable Ramp Start Time; 0.5-180 seconds

l. Adjustable Initial Starting Ramp Torque; 0-100%

m. Adjustable Smooth Stop Ramp Time; 0-60 seconds.

Enclosed units shall include a for short-circuit protection and quick disconnect means. If required, the unit shall include a 24 VDC power supply to be used as the primary control voltage source. A 120 VAC control power transformer, fused on both the primary and secondary sides, shall be provided as an additional control power source to power such devices as motor space heaters, solenoid valves, and similar control elements as required. Input and output isolation contactors shall be furnished as indicated on the Drawings.

Unless otherwise specified or indicated on the Drawings, the RVSS enclosure shall be dead-front, with front accessibility. The enclosure shall be designed for both bottom and top entry. The enclosure shall be designed so rear access is not required for operations, maintenance, and repair tasks. The doors shall have full length piano type hinges and shall be braced to prevent sag when fully open. Other enclosure requirements are:

n. Finish exterior of the enclosures in ANSI-61 gray enamel or furnish in a color to match the complete line-up of equipment as indicated on the Drawings and accepted by the Engineer.

In non-hazardous locations, the RVSS shall be furnished with the following enclosure type and material of construction, dependent upon the designation of the area in which they are to be installed. Area designations are indicated on the Drawings.

Area Designation	Enclosure Type and Material
Indoor Wet Process Area	NEMA 3R, Painted Steel
Indoor Dry Process Area	NEMA 12, Painted Steel
Indoor Dry Non-process Area	NEMA 1, Painted Steel
Indoor Type 1 Chemical Storage/Transfer Area	NEMA 4X, Fiberglass
Indoor Type 2 Chemical Storage/Transfer Area	NEMA 3R, Painted Steel
All Outdoor Areas	NEMA 3R, Painted Steel

The complete starter assembly shall be rated per UL 508 for a minimum withstand rating of 65kAIC rms. Starters enclosed in motor control centers shall be by the same manufacturer.

Control Devices

o. Furnish and install control devices as required and/or shown on the Drawings. The following control devices shall be provided as specified in Section 26 09 16 – Electric Controls and Relays:

1) Pilot devices (switches, indicating lights, etc.)

2) Relays and timers

3) Control Terminal blocks

The reduced voltage solid state starter shall be the SMC-Flex with integral bypass as manufactured by Allen-Bradley, Eaton equivalent, the General Electric Company equivalent, the Square D Company equivalent, or Siemens Energy and Automation, Inc. equivalent.

1.12 Materials / Equipment

A. Each equipment item shall be identified with a nameplate. The nameplate shall be engraved with the equipment name and/or number with which it is associated. Equipment identification shall be in accordance with Section 26 05 53 – Electrical - Identification.

1.13 Fabrication / Assembling / Finishes

A. Not Used

1.14 Source Quality Control / Shop Tests

A. Not Used

EXECUTION

1.15 Examination / Preparation

A. Not Used

1.16 Installation

A. All individual motor starters shall be installed as indicated on the Drawings and as recommended by the equipment manufacturer.

B. Individual motor starters shall be provided in the enclosure type and material of construction required for the area in which it is installed. Reference the requirements in the Products part of this section, and the area designations indicated on the Drawings.

1.17 Field Testing / Quality Control

A. Field testing shall be done in accordance with the requirements specified in Specification Section 01 75 10 – Preliminary and Final Field Tests.

B. Services of Manufacturer’s Representative

The Contractor shall provide the services of a qualified manufacturer's factory-trained technical representative who shall adequately supervise the installation and startup of the RVSS equipment furnished under this Contract. The manufacturer's representative shall certify in writing that the equipment has been installed in accordance with the manufacturer's recommendations. No further testing or equipment startup may take place until this certification is accepted by the City.

The manufacturer’s technical representative shall perform all startup and field acceptance testing as specified herein.

The Contractor shall provide training for the City’s personnel. Training shall be conducted by the manufacturer's factory-trained representative who shall instruct the City’s personnel in operation and maintenance of all equipment provided under this Section. Training shall be provided for two (2) sessions of two (2) hours each. Training shall not take place until after the motor controllers have been installed and tested. Training shall be conducted at times coordinated with the City.

The services of the manufacturer's representative shall be provided for a period of not less than as follows:

a. One (1) trip of two (2) working days during installation of the motor controllers.

b. One (1) trip of two (2) working days to perform startup and field acceptance testing of the motor controllers.

c. One (1) trip of one (1) working day two (2) months before the warranty expiration to identify any issues to be corrected under warranty.

d. One (1) trip of one (1) working day to perform training as specified herein.

Any additional time required to achieve successful installation and operation shall be at the expense of the Contractor.

1.18 Startup / Demonstration

A. Not Used

1.19 Adjusting / Protection / Cleanup

A. Not Used

END OF SECTION

NO TEXT ON THIS PAGE

ESCR 51.11C003 – CHAMBER NO. 3

51.11.1 DESCRIPTION

Chambers shall be constructed of the minimum sizes and shapes as specified herein; complete with frames and covers.

(A) The Contractor shall furnish and install Chamber No. 3, connecting the proposed 42" combined sewer to the existing sewer located near the intersection of Delancey Street North and Baruch Drive. Prior to construction of the chamber, the Contractor shall:

(1) Perform television inspection to verify geometries, service connections and condition of the existing brick sewer the chamber is to be constructed around. Inspection shall comply with the requirements of Section of 53.11 of the Standard Sewer and Water Main Specifications.

(2) Have the invert elevations, geometry and dimensions of the existing sewer surveyed by a licensed surveyor registered in the State of New York and submitted to the Engineer for review. Contractor shall test pit and expose all necessary manholes and piping to confirm the existing sewer at no additional cost to the City

(3) Retain a licensed Professional Engineer registered in the State of New York to prepare signed and sealed shop drawings and calculations which shall be submitted to the Engineer for review and approval at least 90 days in advance of any work. Should the Engineer return the submittal with comments then the Contractor shall revise and resubmit at least 90 days in advance of any work.

(B) DETAILS - The minimum dimensions, minimum reinforcement and minimum requirements utilized for the construction of cast-in-place reinforced concrete chamber for Chamber No. 3 shall conform to the Sewer Design Standards that are deemed to be part of this contract and constructed in accordance with the following:

(1) The minimum interior dimensions of the chamber shall be the following:
   a. Depth
      i. Rim Elevation to Invert Elevation of Chamber = Eight (8) feet
   b. Shape:
      i. Round Chamber Diameter = Ten (10) feet, or
      ii. Square Chamber (L x W) = Ten (10) feet x Ten (10) feet
   c. All dimensions shall be confirmed based on the investigations described in section 51.11.1 A above.

(2) Design in accordance with provisions of the New York City Building Code.

(3) Design for a minimum surface live load of 600 pounds per square foot or AASHTO HS-20, whichever load induces the higher stresses.

(4) Design per seismic criteria as stated on Sheets S001 and S002.

(5) Design per uplift criteria per Notes DF-4 and DF-5 and Sheet S001.

(6) Support by 12-inch diameter micropiles, minimum of four.

(7) Minimum wall and slab thicknesses of 12-inches.

(8) Manhole frame and cover in accordance with the Sewer Design Standards.

(9) Interior benching in accordance with the Sewer Design Standards.

(10) Manhole access to the structure at grade.

(11) Reinforced concrete collar at connection to existing sewer.

(12) Sealing of new pipe connections with expanding rubber waterstops.

51.11.2 MATERIALS

(A) Concrete shall comply with the requirements of **General Specification 11 - Concrete, as modified in Section 23.01**.

(B) Brick and brick masonry shall comply with the requirements of **Section 23.02**.

(C) Frames and covers shall be of cast iron, unless otherwise shown on the contract plans, complying with the requirements of **Section 22.01**, Type 1. Malleable iron or cast steel

(D) Steps shall be copolymer polypropylene plastic manhole steps with one-half (1/2) inch Grade 60 steel reinforcement and shall comply with the Sewer Design Standards.

(E) Cement mortar shall comply with the requirements of **Section 23.03**.

(F) Reinforcement shall comply with the requirements of **General Specification 11 - Concrete, as modified in Section 23.01**.

(G) Structural steel shall comply with the requirements of **Section 23.05**.

(H) Cast iron pipe shall comply with the requirements of **Section 21.03**.

(I) Vitrified clay pipe shall comply with the requirements of **Section 21.02**.

(J) Ductile iron pipe shall comply with the requirements of **Section 21.06**.

(K) Bluestone shall be tough, sound, durable, fine graded sandstone or quartzite, free from injurious seams and other imperfections and saw cut to the required dimensions. It shall be set in a full bed of fresh mortar in compliance with the requirements of **Section 23.03**.

(L) Granite slabs shall comply with the requirements of **Section 23.07**.

(M) Aluminum floor gratings shall comply with the requirements of **Section 22.05**.

51.11.3 CONSTRUCTION METHODS

(A) GENERAL - Chambers shall be constructed to the minimum sizes and dimensions as specified herein, and at the locations and to the elevations as shown on the plans or as ordered by the Engineer.

(B) GENERAL CONSTRUCTION PROVISIONS - The requirements of DIVISION IV - GENERAL CONSTRUCTION PROVISIONS shall apply to the work to be done hereunder.

(C) INVERTS - Inverts of chambers shall be formed between transverse templates and shall be screeded. Where the radii of inverts are too small to permit screeding between templates, the inverts shall be shaped by means of interior forms. The concrete for inverts shall be deposited continuously for their entire cross section and length. Inverts shall be carefully protected from all injury during the progress of the work. The inverts of chambers shall be troweled smooth.

(D) SIDE WALLS - Concrete in the side walls of chambers shall be deposited continuously to the height and to the thickness approved and for their entire length.

(E) ROOF - Concrete in the roofs of chambers shall be deposited continuously for the full depths, and for the entire widths and lengths of the roofs. The outer surfaces of roofs shall be finished true and smooth.

(F) STEPS AND LADDERS - The Contractor shall furnish and install in the chambers, steps and ladders of the size, shape and spacing shown on the plans and on the Sewer Design Standards.

(G) SETTING FRAMES AND COVERS - The brick masonry or concrete for the chambers shall be built to within such distance of the final grade as shown, specified or ordered. Frames and covers shall be as shown on the Sewer Design Standards. The frames shall be set on the masonry or concrete in a full bed of stiff fresh cement mortar.

(H) REINFORCEMENT AND STRUCTURAL STEEL - The steel reinforcement shall be of the dimensions and shapes required, and installed in the manner specified in General Specification 11 - Concrete, as modified in Section 23.01. Structural steel shall be of the shapes and sizes required.

(I) PRECAST CHAMBERS - Chambers shall not be precast unless permission to do so is specified in the contract documents. Precast chambers when permitted in the contract documents shall comply with the requirements of Subsections 51.21.4 and 51.31.4.

(J) REMOVAL OF FORMS - Forms shall be removed in accordance with General Specification 11 - Concrete, as modified in Section 23.01.

(K) BULKHEADS - Approved construction joint bulkheads with provisions for keying and doweling for future sewers shall be provided, where shown or required.

(L) CONNECTIONS - All connections to chambers of existing, new or future sewers and catch basin connections shall be constructed as required.

(M) WATERSTOPS - Waterstops shall be provided between each successive pour in accordance with Section 25.04. Details shall be submitted for waterstops as part of the shop drawings.

51.11.4 MEASUREMENT

The quantities of chambers to be measured for payment shall be the number of chambers of each size and type, incorporated in the work, complete, as shown, specified or required.

51.11.5 PRICE TO COVER

The contract price for "CHAMBERS" shall be a lump sum bid and shall cover the cost of all labor, materials, plant, equipment, samples, tests and insurance required and necessary to construct the chambers, including the earth excavation of all materials of whatever nature encountered (See **Section 40.03 - Earth Excavation**); reinforcement and structural steel; micropiles, all sheeting and bracing; pumping; fluming; bridging; breaking down and filling in of abandoned sewer appurtenances; connections; maintaining flow in sewers; backfilling; cleaning up; and furnishing and installing all other items necessary to complete this work and do all work incidental thereto, all in accordance with the plans and specifications, and as directed by the Engineer. Included in the price hereunder shall be the cost for all labor and materials required to install granite slabs or bluestone, manhole frames and covers, manhole steps and all other hardware in accordance with the plans, specifications and standards, or as directed by the Engineer.

The contract price hereunder shall also include the cost of all labor and materials required to connect at the chamber all existing and new sewers and basin connections; and all required structural steel and reinforcement for sewer connections, as specified or as directed by the Engineer.

In addition, included in the price hereunder shall be the cost of all labor and materials necessary to remove all specified or ordered existing sewers, manholes, structures and appurtenances that may be in the line of the work and do all work incidental thereto, all in accordance with **Subsections 10.13 and 10.28** of the specifications and as directed by the Engineer.

Payment for Chamber No. 3, located near the intersection of Delancey Street North and Baruch Drive will be made under Item ESCR 51.11C003 LS.

END OF SECTION

NO TEXT ON THIS PAGE

33 05 05 BURIED PIPING INSTALLATION

GENERAL

1.01 Summary

A. The Contractor shall provide all labor, materials, equipment, incidentals, and appurtenances as shown, specified and required, to install all buried piping complete and operational, as shown on the Contract Drawings.

1.02 Payment

A. There is no separate payment provision for this Section.

1.03 Related Sections

A. Section 05 05 23.01 – Welding.

B. Section 40 05 06 – Couplings, Adapters, and Specials for Process Piping.

C. Section 40 05 07 – Hangers and Supports for Process Piping.

D. Section 40 05 19 – Ductile Iron Process Pipe.

E. Section 40 06 20 – Piping and Valve Schedule

F. Section 40 05 22 – Steel and Stainless Steel Process Pipe.

G. Section 40 05 56 – Process Valves, Smaller than Four-inch Diameter.

H. Section 40 05 97 – Identification for Process Equipment.

1.04 References

A. Definitions:

Buried Piping:	Includes all piping beginning at the outside face of structures or foundation and extending away from structures. Buried piping includes piping beneath structures or foundations.
Exposed Piping:	Includes all piping beginning at the outside face of a structures or foundation and extending inside. Exposed piping includes interior piping. Exposed piping also includes all piping embedded in concrete, as well as all piping that is permanently or intermittently submerged and/or installed in a subaqueous environment.

B. Reference Standards:

ACI 350.1-10	Specification for Tightness Testing of Environmental Engineering Concrete Containment Structures and Commentary.
ASME	Boiler and Pressure Vessel Code.
ASME B31.1	Power Piping.

ASTM A193	Standard Specification for Alloy-Steel and Stainless Steel Bolting for High Temperature or High Pressure Service and Other Special Purpose Applications.
ASTM A105/A105M	Forgings, Carbon Steel, for Piping Components.
ASTM A307	Standard Specification for Carbon Steel Bolts, Studs, and Threaded Rod 60,000 psi Tensile Strength.
ASTM A530	General Requirements for Specialized Carbon and Allow Steel Pipe.
AWWA C111	Rubber-Gasket Joints for Ductile-Iron Pressure Pipe and Fittings.
AWWA C206	Field Welding of Steel Water Pipe.
AWWA C600	Installation of Ductile-Iron Mains and Their Appurtenances.
AWWA C606	Standard for Grooved and Shouldered Joints.
AWWA M11	Steel Pipe: A Guide for Design and Installation,
AWWA M41	Ductile-Iron Pipe and Fittings.
DIPRA	Installation Guide for Ductile Iron Pipe.
NSF61	Drinking Water System Components Health Effects.

Section 312 of the New York City Plumbing Code

1.05 Description

A. This scope of this Section includes the requirements for the installation of buried piping, except where installation requirements for buried piping are shown or specified elsewhere in the Contract Drawings. In addition:

The scope of this Section includes requirements for:

a. The jointing of buried piping

b. The installation of gasket materials, specials, flexible couplings, mechanical couplings, harnessed and flanged adapters, sleeves, and tie rods.

c. Modifications and/or adjustments to existing buried piping.

d. The installation of supports, restraints, and thrust blocks.

e. The cleaning, disinfecting, and field testing of all buried piping.

The extent of buried process piping is shown on the Contract Drawings. The Contractor shall provide additional buried pipe as necessary and/or required to complete the Work as shown and specified. Buried pipe service, pipe diameter, coating, lining, pressure rating, joint type, and testing requirements are specified in Section 40 06 20 – Piping and Valve Schedule.

Where shown on the Contract Drawings, the Contractor shall provide all labor and materials for making connections between buried piping and existing lines(s) installed under other contracts, including all specials required to connect buried pipe to pipe of dissimilar material(s).

1.06 Quality Assurance

A. Wherever the installation requirements of this Section and the referenced standards or manufacturer requirements are in conflict, the more stringent provision shall apply.

B. Steel Pipe:

Welding of steel pipe and fittings:

a. Welding procedures and welder qualifications shall conform to the requirements specified in Section 05 05 23.01 – Welding, and to ASME Boiler and Pressure Vessel Code Section IX.

1.07 Submittals

A. Submittals shall comply with the requirements of the Contract Documents. Buried piping submittals shall be submitted under the specification section number corresponding to the buried piping material. In addition, submittals shall include, but not be limited to:

Action Submittals:

a. Shop Drawings:

1) Catalog cuts and data sheets, including but not limited to:

a) Specifications for all components of the buried piping.

b) Illustrations in sufficient detail to serve as a guide for assembly and disassembly

c) A parts schedule that identifies the materials to be used for the various piping components and accessories.

d) Weights of all component parts.

e) Details on joining methods.

f) Details of pipe lining, coating, wrapping, insulation and painting.

g) Copy of details of piping, specials, joints, harnessing and thrust blocks, and connections to piping, structures, equipment, and appurtenances (pipe couplings, specials, and adapters shall be submitted for approval under Section 40 05 06, Couplings, Adapters, and Specials for Process Piping).

b. Layout and Installation Drawings:

1) Shall include plans, sections, and details showing location, elevations, and clearly marked dimensions.

2) Piece numbers which are coordinated with the tabulated pipe layout schedule shall be clearly marked.

3) The scale used shall be the greater of the following two (2) scales:

   a) The scale used on the Contract Drawings that depict the process pipe for which the submittal pertains.

   b) ¼-in = 1-ft - 0-in.

4) When special designs or fittings are required, the work shall be shown in large detail and the special or fitting completely described and dimensioned.

5) Include a north arrow.

6) Information on pipe supports, including:

   a) Pipe support location.

   b) Pipe support type.

   c) Thrust block details.

   d) All loads on the support (in either lbs. or kips.)

7) Location of pipe couplings, specials, and adapters.

8) Extent of lining, wrapping, and coatings.

c. A tabulated pipe layout schedule for each buried process pipe system. Submit a separate schedule for each pipe system and/or service. The pipe layout schedule shall include the following information for each pipe section, fitting, and appurtenance that comprises that system:

   1) Service.

   2) Pipe size.

   3) Working pressure.

   4) Weight (in lbs.)

   5) Joint type.

   6) Wall thickness.

   7) Piece number.

   8) Laying length.

d. Calculations for the design of the support structures.

   1) Design calculations shall be signed and sealed by a Professional Engineer registered in the State of New York.

   2) Calculations shall include a summary of design criteria used in the design, including a description of each load case and load combination considered.

3) A tabulation shall be provided giving the column vertical and horizontal reactions for each load combination.

e. For each buried process piping system that contains valves, submit a tabulated valve schedule. Submit a separate schedule for each pipe system and/or service. The valve schedule shall include the following information for each valve:

1) Valve tag number.

2) Valve size.

3) Upstream pressure (units of psig).

f. Testing:

1) Procedures

a) Submit proposed testing procedures, methods, apparatus, and sequencing.

b) Testing procedures shall be submitted for approval at least 30 ccd prior to the test.

2) Reports:

a) Prior to placing the piping system or structure in service, submit for review and approval a detailed bound report summarizing the leakage test data, describing the test procedure and showing the calculations on which the leakage test data is based.

Information Submittals:

g. Certified Letters of Compliance:

1) Certificate of compliance with the requirements of the Contract Documents for pipe, fittings, couplings, sleeves, cleanouts and harnessing.

2) For welded pipe and fittings, submit a certificate from an independent testing laboratory, approved by the City, for each welder assigned to the welding of pipe, fittings, and pipeline equipment.

3) Linings and Coatings:

a) Manufacturer shall submit a certificates or copies thereof attesting to the fact that the applicator met the requirements of the corresponding piping specification, adherence to all standards and testing specified therein, and that the material used was as specified therein.

4) Materials Certificates of Conformance: Submit certificates of conformance with Referenced Standards specified in the corresponding piping specification section.

5) Certificate signed by manufacturer of each product certifying that product conforms to applicable referenced standards.

6) Results of each specified field quality control test.

h. Metallic Pipe Welding Procedures and Qualifications:

1) Certificates shall be of current issue and conform to the requirements of the applicable reference standards. In addition:

a) Certificates that all welders and welding operators have been qualified in accordance with ASME Boiler and Pressure Vessel Code Section IX.

b) Certificates stating that the welding of steel and stainless steel shall conform to the requirements of ASME B31.1.

2) Copies of qualified procedures and list of names and identification symbols of qualified welders and welding operators, prior to welding operations.

1.08 Delivery, Storage, and Handling

A. Not Used

1.09 Spare Parts, Special Tools, and Supplies

A. Not Used

1.10 Special Warranty Provisions / Guarantee Periods

A. Not Used

PRODUCTS

1.11 Manufacturers

A. Polyethylene Underground Warning Tape:

Brady Corp., Milwaukee, WI;

Marking Services, Inc., Milwaukee, WI;

Seton Identification Products, Branford, CT;

Or Approved Equal.

1.12 Materials / Equipment

A. Warning Tape:

General:

a. Tracer tape shall be of inert, acid- and alkali-resistant polyethylene.

b. All tape shall be suitable for direct burial.

c. Message:

1) Shall read as follows: "CAUTION [insert customized name of pipe service as specified in Section 40 05 97, Identification for Process Equipment] PIPE BURIED BELOW"

2) Shall be written with bold letters 2-in. high.

3) Messages shall be printed at maximum intervals of 2 ft.

4) Tape shall be custom colored the same as pipeline colors specified for associated pipe service in Section 40 05 97, Identification for Process Equipment.

For Metallic Pipelines:

d. Size:

1) Thickness: 4 mils.

2) Width: 6-in.

e. Tape shall:

1) Be capable of stretching to twice its original length.

For Non-Metallic Pipelines:

f. Size:

1) Thickness: 5 mils.

2) Width: 6-in.

g. Tape shall:

1) Have aluminum backing.

2) Have 15,000 psi tensile strength.

3) Have 140% elongation capability.

B. Polyethylene Encasement:

Provide polyethylene encasement for all buried ductile iron piping to prevent contact between pipe and surrounding bedding material and backfill.

Provide polyethylene encasement in accordance with AWWA C105.

C. The Contractor shall provide all labor, equipment, air, water and materials, including meters, gauges, blower, pumps, compressors, hoses, fuel, water, bulkheads, temporary bracing and restraints, temporary weirs, valves, plugs, and accessory equipment necessary and required to complete the testing as specified herein.

D. Testing medium:

The Contractor shall provide all air or gasses necessary or required for testing.

Unless otherwise specified, the existing facility shall provide all water (or process fluid) required for testing.

a. The Contractor shall provide all means to convey the fluid into the piping being tested.

E. Refer to the Contract Drawings for availability of water to be used for testing.

1.13 Fabrication / Assembling / Finishes

A. Not Used

1.14 Source Quality Control / Shop Tests

A. Not Used

EXECUTION

1.15 Examination / Preparation

A. Carefully examine pipe, fittings, valves, and specials for cracks, damage, and other defects while suspended above trench before installation.

Immediately remove defective materials from the Site and replace with acceptable products.

B. All pipe coating injured in any way during transit or laying shall be satisfactorily repaired prior to placing the backfill.

Ample provision shall be made for the prompt and efficient repair of all abrasions and injuries.

C. Inspect interior of all pipe, fittings, valves, and specials and completely remove all dirt, gravel, sand, debris, and other foreign material from pipe interior and joint recesses before pipe and appurtenances are moved into excavation. Bell and spigot-type mating surfaces shall be thoroughly wire brushed, and wiped clean and dry immediately before pipe is laid.

D. Certificates of welding qualifications conforming to the requirements of ASME B31.1, Section 6 and its Supplements, shall be submitted to the Engineer for approval prior to proceeding with any pipe welding.

1.16 Installation

A. General:

All piping shall be erected to accurate lines and grades, supported as shown, specified, or required.

a. Slope piping uniformly between elevations shown.

Where temporary supports are used during construction, sufficient strength and rigidity shall be provided to prevent shifting or distortion of the pipe.

All work shall be accomplished using the best methods and procedures of recognized pipe fabrication in a good and workmanlike manner in accordance with the latest edition of the applicable standards referenced in the Contract Documents, including (but not limited to):

b. For ductile iron pipe:

1) AWWA C105

2) AWWA C600.

3) AWWA M41.

c. For steel and stainless steel pipe:

1) AWWA C206.

2) AWWA M11.

All buried pipe, fittings, and appurtenances shall be installed in accordance with all of the following:

d. The manufacturer's printed instructions and recommendations.

e. The approved shop drawings.

f. As specified in the Contract Documents.

Routing:

g. Install piping in a neat manner with lines straight and parallel or at right angles to building walls or structures, unless otherwise shown on the Contract Drawings.

1) Install horizontal lines true to line and elevation.

2) Install vertical lines truly plumb in all directions.

h. Where practicable, install piping in groups and parallel to building walls or structures.

i. Clearance:

1) Clearances shall be measured from the outermost edge of piping, flanges or other type of joint that extends beyond the nominal outside diameter of piping.

j. Small diameter piping and/or piping not shown on the Contract Drawings:

1) If specific locations and elevations are not shown on the Contract Drawings, install small diameter piping as specified herein, and as necessary and required to avoid obstructions.

Cuts:

k. Use cutting methods and machines specially designed for cutting the pipe material and approved by the manufacturer. The following cutting methods are not acceptable:

1) "Squeeze" type pipe cutters

2) Cutting torches

3) Diamond points

4) Dog chisels.

l. Pipe Lengths:

1) Full standard lengths of pipe shall be used in each pipe run in so far as possible.

2) Shorter lengths than standard shall be used only to complete a straight run of pipe, to connect to established locations of valves, equipment, bends, and the like.

3) Random lengths of pipe or cuttings from standard lengths shall not be coupled together when a full standard pipe length will fit in the pipe run.

m. Pipe shall be cut square, and not upset, undersized, or out of round, except as follows:

1) Cut ends of push-on joint type pipe shall be tapered and sharp edges filed off smooth.

n. Ends shall be carefully reamed and cleaned before being installed.

o. Make cuts carefully without damage to coatings or linings.

Excavation:

p. Trench excavation shall conform to the requirements of NYC Department of Environmental Protection (DEP) Bureau of Water and Sewer Operations (BWSO) Standard Sewer and Water Main Specifications.

q. Dewater trench before pipe installation in accordance with NYC DEP BWSO Standard Sewer and Water Main Specifications.

1) Keep groundwater level in trench at least 24-in. below bottom of pipe before laying pipe.

2) Do not lay pipe in water.

3) Maintain dry trench conditions until jointing and backfilling are complete.

4) Keep clean and protect interiors of pipe, fittings, valves, and appurtenances.

r. Excavate trenches below bottom of pipe by amount shown and indicated in the Contract Documents. Remove loose and unsuitable material from bottom of trench.

s. Excavate around joints in bedding as necessary and required to complete joint connection.

Placing:

t. Do not bring pipe into position until preceding length of pipe has been bedded and secured in its final position.

u. For coated pipe, care shall be exercised in laying and cradling the pipe to prevent injury to the coating.

v. Start laying pipe at lowest point and proceed towards higher elevations.

1) On steep slopes, prevent movement of pipe during installation.

w. Lay pipe so that pipe barrel bears uniformly on trench bottom.

x. Exercise care to avoid flotation when installing pipe in cast in-place concrete, and in locations with high groundwater.

y. Grade control equipment shall be of type to accurately maintain design grades and slopes during installation of pipe.

z. Unless otherwise specifically stated, install pipe in accordance with manufacturer's recommendations.

aa. Install bell and spigot pipe so that bells face the direction of laying, unless otherwise shown on the Contract Drawings.

bb. Allow extra length at future connection points to be cut to fit after backfill and prior to tie-in.

cc. Notify the Engineer prior to installing pipe into trench and allow time for Engineer's inspection.

dd. The Contractor shall correct irregularities found during inspection.

ee. Complete tie-ins within trench whenever possible to prevent overstressed connections.

Bedding:

ff. Backfill shall conform to the requirements of –NYC DEP BWSO Standard Sewer and Water Main Specifications, as applicable.

gg. Carefully and thoroughly compact pipe bedding with hand held pneumatic compactors.

Jointing:

hh. Thoroughly clean all pipe, fittings, valves, specials, and accessories before jointing.

1) Remove all cuttings and foreign matter from inside of pipe and tubing.

2) Clean joining area of pipe, fittings, and appurtenances as necessary and required and as per manufacturer instructions.

a) For cleaning pipe ends, solutions such as detergents and solvents, when required, shall be used in accordance with manufacturer's recommendations.

ii. Use jointing methods recommended and approved by the pipe manufacturer.

jj. Transitions from One Type of Pipe to Another:

1) Provide all necessary adapters, specials and connection pieces required when connecting different types and sizes of pipe or connecting pipe made by different manufacturers.

2) Connections between Dissimilar Metals:

a) Provide dielectric couplings, insulating couplings, unions, or other approved dielectric insulating devices, at all connections to pipelines or equipment of dissimilar metals, regardless of whether devices are shown on the Contract Drawings.

Bends and Turns:

kk. Bends shall be of 45° or 90° unless otherwise shown on the Contract Drawings.

ll. Pipe Flexibility:

1) Do not bend pipe to greater degree than minimum radius recommended by the pipe manufacturer for type and grade.

2) Do not subject pipe to strains that will overstress or buckle piping or impose excessive stress on joints.

Plugs:

mm. Shall match the materials, linings, and coatings of the process piping, and shall have a square head.

Transitions:

nn. Reducing fittings shall be used for all changes in pipe sizes, even when not specifically shown on the Contract Drawings.

1) Unless otherwise shown or specified, use eccentric reducing fittings.

oo. Do not use bushings or nipples for buried piping.

pp. Between pressure ratings:

1) Where lines of lower service rating tie into services, appurtenances, or equipment of higher service rating, the equipment, valve, or appurtenance between the two shall conform to the higher rating.

Restraints, Supports, and Thrust Blocks:

qq. Provide concrete and metal cradles, collars, kickers, and blocks as shown on the Contract Drawings or as necessary and/or required to provide thrust restraint.

B. Ductile Iron Pipe:

Cutting:

a. Where field cutting of ductile iron pipe is permitted by the City, ductile iron pipe shall be cut only by means of abrasive saws, hack saws, wheel type cutters or milling type cutters.

End Connections:

b. Mechanical Joint:

1) Ensure that cut ends are tapered and sharp edges are filed off smooth. Thoroughly clean the plain end (spigot) and the socket of the pipe or fitting.

2) Brush the socket, spigot end, gasket, and adjacent areas immediately before making joint with soapy water in accordance with AWWA C111.

3) Slip the gland and gasket over the spigot with the small side of the gasket facing the socket and the lip side of the gland facing the socket.

4) Insert the spigot into the socket and press the gasket firmly and evenly into the gasket recess. Keep the joint straight during assembly.

5) Slide the gland towards the socket and center it around the pipe with the gland lip against the gasket.

6) Insert bolts and tighten nuts by hand.

7) With an ordinary ratchet wrench, tighten bolts evenly and alternately around. The pattern for tightening bolts shall be as per the manufacturer's recommendations. The bolt torque for mechanical joints shall be as per the DIPRA Installation Guide.

8) Do not deflect mechanical joint pipe after installation.

c. Push-On Joint:

1) Ensure that the spigot (plain) end is beveled as per the manufacturer’s recommendations and that sharp edges are filed off smooth.

a) Use a heavy file or grinder to bevel the plain end.

b) Do not use a saw blade to bevel the plain end.

2) Thoroughly clean the groove and the bell socket of the pipe or fitting. Also clean the plain end of the mating pipe or fitting.

3) Except for pipe lined or coated, use a wire brush to clean the exterior surface of the spigot and the interior surface of the bell.

a) Use a method for cleaning coated or lined portions of the pipe recommended by the coating or lining manufacturer.

4) Insert gasket into joint recess and smooth out entire circumference of gasket to remove bulges and to prevent interference with proper entry of spigot of entering pipe.

   a) Use a rubber gasket recommended by the pipe manufacturer, unless otherwise shown or specified.

      (1) Do not use gaskets that have been scored or otherwise damaged.

   b) Wipe clean rubber gaskets and flex gaskets until resilient. follow the manufacturer instructions for gasket resiliency when assembling joints in cold weather.

   c) As per the DIPRA Installation Guide, make at least one (1) small loop and then insert the gasket into the socket.

      (1) For pipe sizes larger than 20-in. nominal diameter, it may be necessary to make two loops in the gasket opposite each other.

      (2) Make sure the gasket faces the correct direction as per the manufacturer's instructions and that it is properly seated.

5) Apply lubricant as per the manufacturer recommendations to the surface of the gasket that will come in contact with the entering spigot. Also apply lubricant to the outside of the entering spigot.

      (1) As per the DIPRA Installation Guide, do not apply lubricant to the bell socket or the surface of the gasket in contact with the bell socket.

6) Push the spigot end into the bell socket of the mating pipe or fitting, ensuring the joint remains straight.

   a) Pause insertion when the spigot end just makes contact with the rubber gasket.

   b) After the gasket is compressed and before the pipe is inserted completely, carefully check the gasket for proper position around the full circumference of joint.

   c) Final assembly shall be made by inserting the spigot end of the entering pipe past the gasket until it makes contact with the base of the bell.

7) Deflect push-on joint pipe only after the joint is assembled and not exceeding the deflection shown on the Contract Drawings and the maximum deflection specified in the DIPRA Installation Guide for the nominal diameter of pipe in question.

d. Grooved / Shouldered End Joints:

1) Grooved and shouldered end joints and their installation shall conform to the requirements of AWWA C606.

2) Thoroughly clean the joint ends to remove foreign matter. Except for coated pipe, use a wire brush to clean the exterior surface of the joint ends.

a) Use a method for cleaning the coated portion of the pipe recommended by the coating manufacturer.

3) Remove the bolts from the coupling.

4) Apply lubricant to the rubber gasket or inside of the coupling housing and joint ends as per the manufacturer recommendations.

5) Position and install the gasket over the gap between the joint ends.

6) Install the coupling housing around the gasket and over the grooved or shouldered joint ends. Insert bolts and install nuts tightly by hand.

7) Tighten the bolts uniformly and according to the manufacturer's instructions.

e. Flanged Connections:

1) All flange faces shall be in perfect alignment with the holes straddling the vertical center line of the piping.

2) Properly center the gasket. Use full-face gaskets for flat-face flanges.

3) Gaskets shall be suitable for the service conditions.

4) The gasket thickness shall be as recommended by the pipe manufacturer, with the exception that:

5) The minimum gasket thickness for raised face flanges shall be ⅛-in.

6) Bolts shall be of sufficient length so that when fully tightened, a minimum of two full threads shall extend beyond the nut.

7) Bolts shall be well lubricated over the entire thread length with a heavy graphite and oil mixture prior to the tightening operation.

8) Bolts shall be tightened with proper wrenches, care being taken to secure uniform pressure on the bolts and gasket and to avoid over stressing of the bolts, dishing of the flanges and compression of the gasket beyond its proper limits.

a) Commercial grade carbon steel bolts, ASTM A307, Grade B shall be tightened to obtain approximately 15,000 psi stress based on the root area of the thread.

b) Alloy steel bolts, ASTM A193, Grade B7 shall be tightened to obtain a stress of 45,000 psi.

c) The pattern for tightening bolts shall be as per the manufacturer's recommendations.

Support:

f. Ductile iron below floors that is not to be encased in concrete.

1) Where ductile iron pipe shall be buried below floor structures, the pipe shall be supported by concrete encased adjustable clevis hangers anchored to the floor by means of bearing plates.

a) Supports shall conform to the requirements of Section 40 05 07, Hangers and Supports for Process Piping.

b) Hangers shall be spaced not more than 5 ft apart.

C. Steel Pipe:

General:

a. Install in accordance with the best piping practice with a minimum exposure to the elements and to other corrosive conditions.

b. Before erection, all uncoated pipes shall be placed on end and hammered to remove scale and loose particles.

c. Pipe compounds:

1) For general service: Use an approved mastic metallic compound, Teflon tape, or approved equal shall be used.

2) For oil service: Use an approved compound resistant to oil.

3) For potable water: Use a NSF61 approved pipe compound.

End Connections:

d. Flanged Connections:

1) All flange faces shall be in perfect alignment with the holes straddling the vertical center line of the piping.

2) Properly center the gasket. Use full-face gaskets for flat-face flanges.

3) Gaskets shall be suitable for the service conditions.

4) The gasket thickness shall be as recommended by the pipe manufacturer, with the exception that:

5) The minimum gasket thickness for raised face flanges shall be ⅛-in.

6) Bolts shall be of sufficient length so that when fully tightened, a minimum of two full threads shall extend beyond the nut.

7) Bolts shall be well lubricated over the entire thread length with a heavy graphite and oil mixture prior to the tightening operation.

8) Bolts shall be tightened with proper wrenches, care being taken to secure uniform pressure on the bolts and gasket and to avoid over stressing of the bolts, dishing of the flanges and compression of the gasket beyond its proper limits.

a) Commercial grade carbon steel bolts, ASTM A307, Grade B shall be tightened to obtain approximately 15,000 psi stress based on the root area of the thread.

b) Alloy steel bolts, ASTM A193, Grade B7 shall be tightened to obtain a stress of 45,000 psi.

c) The pattern for tightening bolts shall be as per the manufacturer's recommendations.

e. Welded Joints:

1) All welding of the following shall be in strict conformity with the Code for Pressure Piping, ASME B31.1, Section 6 and its Supplements:

a) Steel and stainless steel pipe.

b) Steel and stainless steel butt-welding fittings.

c) Steel and stainless steel fabricated fittings.

2) Welding shall not be done when the atmospheric temperature is less than 32°F or when surfaces to be welded are wet.

3) The surface to be welded shall be free from loose scale, slag, rust, paint, oil and other foreign material. Joint surfaces shall be smooth, uniform and free from fins, tears and other defects which might affect proper welding.

4) Backing rings shall be used for all pipe welding butt joints unless otherwise specified.

a) Backing rings shall be of carbon steel with spacer nubs that strike-off or melt with the weld.

5) Field Welding of Stainless Steel:

a) No field welding of any stainless steel pipe or fittings shall be permitted unless otherwise shown on the Contract Drawings.

6) Welding of Cement Lined Steel:

a) Welding of cement lined steel pipe will be permitted only with the approval and under the observation of the Engineer where such welding is shown on the Contract Drawings.

7) The ends of the lined pipe for pipe-to-pipe joints shall be machine cut to provide an approximate bevel of 27½°.

a) Bevels shall be accurately cut by machining or by a mechanically guided cutting torch.

b) Ends may be chipped provided there is no damage to the cement lining.

8) Where fittings already having a bevel of 37½° are to be welded to pipe, pipe ends shall be beveled to a 17½° angle, making a total angle of bevel between joints approximately 55°. A ⅛-in. land shall be provided where possible.

9) Parts to be joined shall be approximately $^{1}/_{32}$-in. apart before tacking.

a) Backing rings shall not be used at welded joints.

10) Piping shall be carefully aligned before welding and maintain alignment.

11) Small tack welds shall be made using a ⅛-in. electrode.

a) Defective tack welds shall be removed before the final weld is made.

12) The first bead or layer of welding shall be laid by bridging across from bevel to bevel at the bottom of the groove just at the top of the land. A suitable crown reinforcement layer shall be made on the top of the joint to finish off.

a) All layers of welding shall be of the same quality as the final welds and shall be fused thoroughly therein.

13) Direct current (dc) shall be used for welding, with the base material on the negative side.

14) Passes:

a) The first pass shall be a stringer bead using a ⅛-in. electrode with a current of 80A to 90A at 50V to 55V.

b) The second and succeeding passes shall be woven beads using a ⅛-in. electrode and a current of 90A to 100A at 55V to 58V.

c) All passes shall be made slowly and with care not to burn through the land or the shoulder into the lining of the pipe.

d) The joint shall not be hotter than 100°F.

e) For large size pipe, a $^{5}/_{32}$-in. electrode may be used, provided the temperature of the joint is held within this limit.

f) The surface of the finished welds shall have a bright metallic luster after cleaning, a fairly smooth and uniform contour with regular ripples and be free from overlaps, undercuts and excessive convexity.

15) No stress-relieving of welded joints is necessary unless the pipe wall thickness warrants it.

16) Welds shall be sound throughout, fused thoroughly and free from gas pockets, oxide, slag inclusions and surface porosity. The inside of the pipe shall be free from globules of weld metal, spacers or other material which would restrict the pipe area or become loose to enter the fluid stream.

17) Defective or unsound welds shall be corrected by removing and replacing the welds. Pipe or fittings which cannot be re-welded satisfactorily shall be replaced with new pipe or fittings at the Contractor's expense.

18) All welded joints will be visually inspected by the Engineer for defects beyond those acceptable in ANSI B31.1. Method of repair shall be in accordance with instructions as received from the Engineer.

19) Filling of Cement Lined Joints:

a) After the weld is completed, the joints in the lining shall be filled with a special compound of a wet slurry mix of the same cement used for the lining.

b) Where accessible from the end of the pipe, the welded joint shall be swabbed with cement using a paint brush thoroughly wetted with the cement slurry.

20) Repairing of Cement Lined Joints:

a) Any defects causing leaks in welded joints shall be repaired by welding without damaging the cement lining using the procedures specified herein.

Connection of Steel Pipe to Cast Iron Bell and Spigot Pipe to:

f. Where connection is required between steel and bell and spigot cast iron pipe, a sleeve-type transition coupling meeting the requirements of Section 40 05 06, Couplings, Adapters, and Specials for Process Piping, shall be provided.

D. Separation of Sewers and Potable Water Piping:

Requirements for the separation of sewers and potable water piping apply to all buried piping installation, regardless of piping materials.

In the event that the requirements specified herein differ from separations shown on the Contract Drawings and/or differ from separations required by Authorities Having Jurisdiction, the more stringent (i.e., greater separation distance) shall apply.

The Contractor shall install all buried potable water piping and sewers with the following separations:

a. For water mains installed parallel to sewers:

1) Where the depth to the bottom of the sewer cradle is less than 10 ft, the clearance between the outside of the water main and the centerline of the existing sewer should be not less than 6 ft plus one-half the sewer diameter.

2) Where the depth to the bottom of the sewer cradle is 10 ft or more, the clearance between the outside of the water main and the centerline of the existing sewer shall be increased 1 ft for each additional 5 ft of depth over 10 ft, or portion thereof.

b. For water mains crossing sewers:

1) Wherever the clearance between the top of an existing sewer and the bottom of the proposed water main, at their crossing, is less than 1 ft, the water main is to be supported by a truss arrangement and the clearance space is to be filled with layers of compressible material to avoid excessive bearing pressure on the sewer pipe.

a) In no case, however, should this clearance be less than 6 in.

1.17 Field Testing / Quality Control

A. The scope of this Section includes the requirements for testing of buried piping, except where testing requirements for buried piping are shown or specified elsewhere in the Contract Documents.

B. All buried pipelines, gravity sewers, and structures for which testing requirements are specified in this Section shall be watertight or airtight, including all buried piping, structures, and appurtenances installed under other Sections, but that specify testing under this Section.

C. Piping and structures which fail leakage tests shall be repaired or replaced at the Contractor's expense and to the satisfaction of the Engineer. These repaired piping and structures shall then be retested at the Contractor's expense until leakage test results meet the requirements specified herein

D. Notification:

Provide the Engineer with written notice at least 14 ccd prior to the date of testing.

a. No tests shall be conducted without an approved written procedure.

b. The Engineer shall respond in writing to the Contractor within 7 ccd of receiving the written notification.

All leakage tests shall be conducted in the presence of the Engineer.

c. All leakage tests shall be conducted in the presence of local authorities having jurisdiction, if required.

Remove or protect devices and appurtenances that could be damaged by testing.

E. Backfilling of buried or concealed pipelines:

a. Completely backfill all harnessed sections of buried or concealed piping before such sections are tested.

b. Non-harnessed sections of buried piping shall be tested before backfilling

F. Perform leakage testing for all buried piping:

Test all buried pipelines using a hydrostatic test.

Operation of Existing Facilities:

a. Conduct all tests in a manner to minimize interference with operations of existing facilities or other contractors working on the site.

G. Hydrostatic Testing

Test Procedure:

a. Maintain the testing medium at the specified pressure for a period of 4 hrs.

1) Unless otherwise specified, the testing medium shall be clean water.

2) Do not use air for hydrostatic testing of pipelines intended for liquid service – use compressed air (or gas) only for the hydrostatic testing of air (or gas) pipelines.

b. Test the piping as a whole or in sections.

1) The Contractor shall use valves or install temporary bulkheads at the ends of each section.

2) Remove temporary bulkheads at the conclusion of the hydrostatic testing.

c. Apply the specified hydrostatic test pressure to the piping through a tap in the pipe by means of a pump, compressor, or other approved method.

Test Pressures: submit a test pressure of 1.5 times the maximum possible operating pressure of the pipeline, for approval by the Engineer.

Leakage:

d. The allowable leakage shall not exceed the testing allowance given by the following formula from AWWA Standard C600:

$$L = \frac{S \cdot D \cdot \sqrt{P}}{148{,}000}$$

Where: L = testing allowance (makeup water) (gph).

S = length of pipe tested (ft).

D = nominal diameter of the pipe, (in.).

P = average test pressure during the hydrostatic test (psig).

Repair:

e. Replace broken pipe or joint assemblies found to leak.

f. When leakage occurs in excess of the specified amount, locate and repair defective valves, pipe, cleanouts or joints.

g. If defective portions cannot be located, remove and reconstruct as much of the original work as necessary to obtain piping that meets the leakage requirements specified herein and retest, all at no additional cost to the City.

H. Hydrostatic Testing of Valves

Test Procedure:

a. Prior to the application of the test pressure, operate the valve(s) through the number of complete cycles of closing and opening recommended by the manufacturer.

b. Next, apply the test pressure to one side of the valve (i.e., the first side).

1) The valve shall be in the closed position.

2) Introduce the liquid testing medium to the first side only and apply the test pressure.

a) The other side of the valve(s) (i.e., the second side) shall be dry and unpressurized (0 psig).

3) Maintain the testing medium at the specified pressure for a period of 4 hrs.

c. Then, reverse the side to which the test pressure is applied.

1) The valve shall still be in the closed position.

2) Now apply the test medium and pressure to the other side of each valve (i.e., the second side).

3) The side tested first (i.e., the first side) shall now be unpressurized (0 psig).

4) Maintain the testing medium at the specified pressure again for a minimum period of 4 hrs.

d. Hydrostatic testing of valve(s) may be concurrent with hydrostatic testing of pipeline section(s) to the extent permissible by the testing requirements specified herein.

e. The Contractor shall be responsible for draining and disposing of the test medium in accordance with the requirements of the Contract Documents, as necessary and required to test both sides of each valve in this manner.

Test Pressure:

f. Hydrostatic test each valve such that the differential pressure across the valve at the same test pressure specified for the pipe in which the valve is installed.

Leakage:

g. Stop all external and internal leakage through the valves.

h. No leakage across the valve shall be acceptable.

Movement:

i. Stop all valve movement or structural distress.

j. No movement of the valve is acceptable.

1.18 Startup / Demonstration

A. Not Used

1.19 Adjusting / Protection / Cleanup

A. Not Used

END OF SECTION

NO TEXT ON THIS PAGE

40 05 05 EXPOSED PIPING INSTALLATION

GENERAL

1.01 Summary

A. The Contractor shall provide all labor, materials, equipment, incidentals, and appurtenances as shown, specified and required, to install all exposed piping complete and operational.

1.02 Payment

A. There is no payment provision for this Section.

1.03 Related Sections

A. Section 40 05 06 – Couplings, Adapters, and Specials for Process Piping.

B. Section 40 05 07 – Hangers and Supports for Process Piping.

C. Section 40 05 19 – Ductile Iron Process Pipe.

D. Section 40 05 22 – Steel and Stainless Steel Process Pipe.

E. Section 40 05 56 – Process Valves, Smaller than Four-inch Diameter.

F. Section 40 05 97 – Identification for Process Equipment.

1.04 References

A. Definitions:

Buried Piping:	Includes all piping beginning at the outside face of a structures or foundation and extending away from structures. Buried piping includes piping beneath structures or foundations.
Exposed Piping:	Includes all piping beginning at the outside face of a structures or foundation and extending inside. Exposed piping includes interior piping. Exposed piping also includes all piping embedded in concrete, as well as all piping that is permanently or intermittently submerged and/or installed in a subaqueous environment.

B. Reference Standards:

ANSI/SMACNA	Seismic Restraint Manual.
ASME	Boiler and Pressure Vessel Code.
ASME B1.1	Unified Inch Screw Threads.
ASME B31.1	Power Piping.
ASME B31.3	Process Piping.

ASTM A193	Standard Specification for Alloy-Steel and Stainless Steel Bolting for High Temperature or High Pressure Service and Other Special Purpose Applications.
ASTM A307	Standard Specification for Carbon Steel Bolts, Studs, and Threaded Rod 60,000 psi Tensile Strength.
ASTM B32	Standard Specification for Solder Metal
ASTM D2564	Standard Specification for Solvent Cements for PVC Plastic Piping Systems.
ASTM D2855	Standard Practice for the Two-Step (Primer and Solvent Cement) Method of Joining PVC or CPVC Pipe and Piping Components with Tapered Sockets.
ASTM F493	Standard Specification for Solvent Cements for CPVC Plastic Pipe and Fittings.
ASTM F656	Standard Specification for Primers for Use in Solvent Cement Joints of PVC Plastic Pipe and Fittings.
AWWA C111	Rubber-Gasket Joints for Ductile-Iron Pressure Pipe and Fittings.
AWWA C206	Field Welding of Steel Water Pipe.
AWWA C600	Installation of Ductile-Iron Mains and Their Appurtenances.
AWWA C606	Standard for Grooved and Shouldered Joints.
AWWA M11	Steel Pipe: A Guide for Design and Installation,
AWWA M23	PVC Pipe – Design and Installation.
AWWA M41	Ductile-Iron Pipe and Fittings.
DIPRA	Installation Guide for Ductile Iron Pipe.
NSF61	Drinking Water System Components Health Effects.

1.05 Description

A. This scope of this Section includes the requirements for the installation of exposed piping, except where installation requirements for exposed piping are shown or specified elsewhere in the Contract Documents. In addition:

The scope of this Section includes requirements for:

a. The jointing of exposed piping

b. The installation of gasket materials, specials, flexible couplings, mechanical couplings, harnessed and flanged adapters, sleeves, and tie rods.

c. Modifications and/or adjustments to existing exposed piping.

d. The installation of supports, restraints, and other anchors.

e. The cleaning, disinfecting, and field testing of all exposed piping.

The extent of exposed process piping is shown on the Contract Drawings. The Contractor shall provide additional exposed pipe as necessary and/or required to complete the Work as shown and specified. Exposed pipe service, pipe diameter, coating, lining, pressure rating, joint type, and testing requirements are specified in the following section(s):

f. Section 40 06 01, Schedule for Exposed Piping.

Where shown on the Contract Drawings, the Contractor shall provide all labor and materials for making connections between exposed piping and existing lines(s) installed under other contracts, including all specials required to connect exposed pipe to pipe of dissimilar material(s).

1.06 Quality Assurance

A. Ductile Iron Pipe:

Refer to the latest edition of the DIPRA Installation Guide for Ductile Iron Pipe and the ductile iron piping manufacturer recommendations.

a. Where requirements from the manufacturer, requirements specified by the DIPRA Installation Guide, and requirements specified herein differ, apply the most stringent requirement of the three.

B. Steel Pipe:

Welding of steel pipe and fittings:

a. Welding procedures and welder qualifications shall conform to ASME Boiler and Pressure Vessel Code Section IX.

1.07 Submittals

A. Submittals shall comply with the requirements of the Contract Documents. Exposed piping submittals shall be submitted under the specification section number corresponding to the exposed piping material. In addition, submittals shall include, but not be limited to:

Action Submittals:

a. Shop Drawings:

1) Catalog cuts and data sheets, including but not limited to:

a) Specifications for all components of the exposed piping.

b) illustrations in sufficient detail to serve as a guide for assembly and disassembly

c) A parts schedule that identifies the materials to be used for the various piping components and accessories.

d) Weights of all component parts.

e) Details on joining methods.

f) Details of pipe lining, coating, wrapping, insulation and painting.

g) Copy of pipe coupling, special, and adapter details (pipe couplings, specials, and adapters shall be submitted for approval under Section 40 05 06, Couplings, Adapters, and Specials for Process Piping).

h) Copy of expansion joint details (expansion joints shall be submitted for approval under the specification section in which they are specified)

i) Copy of pipe hanger details (pipe hangers shall be submitted for approval under Section 40 05 07, Hangers and Supports for Process Piping).

j) Copy of pipe insulation details (insulation shall be submitted for approval under Section 40 42 13, Process Piping Insulation).

b. Layout and Installation Drawings:

1) Shall include plans, sections, and details showing location, elevations, and clearly marked dimensions.

2) Piece numbers which are coordinated with the tabulated pipe layout schedule shall be clearly marked.

3) The scale used shall be the greater of the following two (2):

a) The scale used on the Contract Drawings that depict the process pipe for which the submittal pertains, or

b) A minimum scale of ¼-in = 1-ft - 0-in.

4) When special designs or fittings are required, the work shall be shown in large detail and the special or fitting completely described and dimensioned.

5) Include a north arrow.

6) Information on pipe supports, including:

a) Pipe support location.

b) Pipe support type.

c) hanger rod size.

d) Insert type.

e) All loads on the support (in either lbs. or kips.)

7) Locations where pipe and valve identification signs will be placed.

8) Location of pipe couplings, specials, and adapters.

9) Location of expansion joints.

10) Locations of pipe hangers and supports.

11) Extent of pipe insulation and heat tracing.

12) Extent of lining, wrapping, and coatings.

c. A tabulated pipe layout schedule for each exposed process pipe system. Submit a separate schedule for each pipe system and/or service. The pipe layout schedule shall include the following information for each pipe section, fitting, and appurtenance that comprises that system:

1) Service.

2) Pipe size.

3) Working pressure.

4) Weight (in lbs.)

5) Joint type.

6) Wall thickness.

7) Piece number.

8) Laying length.

d. Calculations for the design of the support structures.

1) Design calculations shall be signed and sealed by a Professional Engineer registered in the State of New York.

2) Calculations shall include a summary of design criteria used in the design, including a description of each load case and load combination considered.

3) A tabulation shall be provided indicating vertical and horizontal deflections for the supports and individual members, determined for each load combination identified above.

4) A tabulation shall be provided giving the column vertical and horizontal reactions for each load combination.

e. For each exposed process piping system that contains expansion and swing joints, submit EMA calculations. Submit separate calculations for each pipe system and/or service.

f. For each exposed process piping system that contains valves, submit a tabulated valve schedule. Submit a separate schedule for each pipe system and/or service. The valve schedule shall include the following information for each valve:

1) Valve tag number.

2) Valve size.

3) Whether the valve is manual or actuated. If actuated, the type of actuator.

4) 100% open Cv value for control valves.

5) Upstream pressure (units of psig).

g. For steam piping, submit a trap schedule that includes:

1) Trap size.

2) Location and service.

3) Equipment tag number.

4) steam pressure (units of psig).

5) capacity required (units of lbs/h).

6) maximum capacity with safety factor.

7) Model number.

Information Submittals:

h. Certified Letters of Compliance:

1) Certificate of compliance with the requirements of the Contract Documents for pipe, fittings, couplings, sleeves, cleanouts and harnessing.

2) Certificate from an independent testing laboratory, approved by the Engineer, for each welder assigned to the welding of pipe, fittings, and pipeline equipment.

3) Linings and Coatings:

a) Manufacturer shall submit a certificates or copies thereof attesting to the fact that the applicator met the requirements of the corresponding piping specification, adherence to all standards and testing specified therein, and that the material used was as specified therein.

4) Materials Certificates of Conformance: Submit certificates of conformance with Referenced Standards specified in the corresponding piping specification section.

i. Welding Procedures and Qualifications:

1) Certificates shall be of current issue and conform to the requirements of the applicable reference standards. In addition:

a) Certificates that all welders and welding operators have been qualified in accordance with ASME Boiler and Pressure Vessel Code Section IX.

b) Certificates stating that the welding of steel and stainless steel shall conform to the requirements of ASME B31.1.

2) Copies of qualified procedures and list of names and identification symbols of qualified welders and welding operators, prior to welding operations.

1.08 Delivery, Storage, and Handling

A. Not Used

1.09 Spare Parts, Special Tools, and Supplies

A. Not Used

1.10 Special Warranty Provisions / Guarantee Periods

A. Not Used

PRODUCTS

1.11 Manufacturers

A. Not Used

1.12 Materials / Equipment

A. Structural Attachments:

Structural steel brackets required to support piping and appurtenances but not shown on the Contract Drawings shall be provided under this section.

1.13 Fabrication / Assembling / Finishes

A. Identification:

Provide in accordance with Section 40 05 97, Identification for Process Equipment.

1.14 Source Quality Control / Shop Tests

A. Not Used

EXECUTION

1.15 Examination / Preparation

A. All pipe coating injured in any way during transit or laying shall be satisfactorily repaired prior to placing the backfill.

Ample provision shall be made for the prompt and efficient repair of all abrasions and injuries.

B. Certificates of welding qualifications conforming to the requirements of ASME B31.1, Section 6 and its Supplements, shall be submitted to the Engineer for approval prior to proceeding with any pipe welding.

1.16 Installation

A. General:

All piping shall be erected to accurate lines and grades, permanently supported as shown, specified, or required.

Where temporary supports are used during construction, sufficient strength and rigidity shall be provided to prevent shifting or distortion of the pipe.

All work shall be accomplished using the best methods and procedures of recognized pipe fabrication in a good and workmanlike manner in accordance with the latest edition of the applicable standards referenced in the Contract Documents, including (but not limited to):

a. For ductile iron pipe:
   1) AWWA C600.
   2) AWWA M41.

b. For steel and stainless steel pipe:
   1) ASME B31.3.
   2) AWWA C206.
   3) AWWA M11.

c. For thermoplastic pipe:
   1) AWWA M23.

All exposed pipe, fittings, and appurtenances shall be installed in accordance with all of the following:

d. The manufacturer's printed instructions and recommendations.

e. The approved shop drawings.

f. As specified in the Contract Documents.

Routing:

g. Install piping in a neat manner with lines straight and parallel or at right angles to walls or column lines, unless otherwise shown on the Contract Drawings.
   1) Install horizontal lines true to line and elevation.
   2) Install vertical lines truly plumb in all directions.

h. Where practicable, install piping in groups and parallel to building walls.

i. Avoid installing piping through ductwork or directly under electric light outlets, or interfering with other pipe, lines, conduit, etc.

j. Leave all corridors, walkways, work areas, and similar spaces unobstructed.

k. Clearance:
   1) Clearances shall be measured from the outermost edge of piping, flanges or other type of joint that extends beyond the nominal outside diameter of piping.

2) Provide a minimum clearance of 1-in. between pipe and other work.

3) Avoid installing pipe beyond furring lines as determined by the Architectural Drawings.

4) Provide a minimum headroom clearance under piping and pipe supports of 7.5 ft.

l. Small diameter piping and/or piping not shown on the Contract Drawings:

1) If specific locations and elevations are not shown on the Contract Drawings, install small diameter piping as specified herein, and as necessary and required to avoid ducts, equipment, beams, and other obstructions.

m. Multiple Pipe Runs:

1) In the support of multiple pipe runs on a common base member, a clip or clamp shall be used where each pipe crosses the base support member.

2) Spacing of the base support members shall not exceed the hanger and support spacing required for any individual pipe in the multiple pipe run.

Placing:

n. Install bell and spigot pipe so that bells face the direction of laying, unless otherwise shown on the Contract Drawings.

o. For coated pipe, care shall be exercised in laying and cradling the pipe to prevent injury to the coating.

Cuts:

p. Use cutting methods and machines specially designed for cutting the pipe material and approved by the manufacturer. The following cutting methods are not acceptable:

1) "Squeeze" type pipe cutters

2) Cutting torches

3) Diamond points

4) Dog chisels.

q. Pie Lengths:

1) Full standard lengths of pipe shall be used in each pipe run in so far as possible.

2) Shorter lengths than standard shall be used only to complete a straight run of pipe, to connect to established locations of valves, equipment, bends, and the like.

3) Random lengths of pipe or cuttings from standard lengths shall not be coupled together when a full standard pipe length will fit in the pipe run.

r. Pipe shall be cut square, and not upset, undersized, or out of round, except as follows:

1) Cut ends of push-on joint type pipe shall be tapered and sharp edges filed off smooth.

s. Ends shall be carefully reamed and cleaned before being installed.

t. Make cuts carefully without damage to coatings or linings.

Jointing:

u. Thoroughly clean all pipe, fittings, valves, specials, and accessories before jointing.

1) Remove all cuttings and foreign matter from inside of pipe and tubing.

2) Clean joining area of pipe, fittings, and appurtenances as necessary and required and as per manufacturer instructions.

a) For cleaning pipe ends, solutions such as detergents and solvents, when required, shall be used in accordance with manufacturer's recommendations.

v. Use jointing methods recommended and approved by the pipe manufacturer.

w. Unions:

1) Provide a union downstream of each valve with screwed connections.

2) Provide screwed or flanged unions at each piece of equipment, where shown, and where necessary to install or dismantle piping.

x. Transitions from One Type of Pipe to Another:

1) Provide all necessary adapters, specials and connection pieces required when connecting different types and sizes of pipe or connecting pipe made by different manufacturers.

2) Connections between Dissimilar Metals:

a) Provide dielectric couplings, insulating couplings, unions, or other approved dielectric insulating devices, at all connections to pipelines or equipment of dissimilar metals, regardless of whether devices are shown on the Contract Drawings.

b) Refer to Section 40 05 15, Copper and Brass Process Pipe, for additional requirements for dielectric insulating devices for use with copper and brass process pipe.

Bends and Turns:

y. Do not spring or deform piping to make up joints.

z. Bending of pipe is not permitted.

1) Use fittings for all changes in direction.

aa. Bends shall be of 45° or 90° unless otherwise shown on the Contract Drawings.

Plugs:

bb. Shall match the materials, linings, and coatings of the process piping, and shall have a square head.

Transitions:

cc. Reducing fittings shall be used for all changes in pipe sizes, even when not specifically shown on the Contract Drawings.

1) Unless otherwise shown or specified, use eccentric reducing fittings.

dd. Do not use bushings, except where specifically shown on the Contract Drawings.

ee. Nipples shorter than 4-in in length shall be Schedule 80.

ff. Between pressure ratings:

1) Where lines of lower service rating tie into services, appurtenances, or equipment of higher service rating, the equipment, valve, or appurtenance between the two shall conform to the higher rating.

Drainage:

gg. The Contractor shall provide all pipelines with a means for drainage at all low points in the lines.

1) Provide appurtenances for condensate drainage, regardless of whether such means is shown on the Contract Drawings and/or the approved shop drawings.

2) Drainage from gas lines shall be provided through an approved, double-valved, manually operated condensate trap.

hh. Drainage valves and appurtenances shall be:

1) A minimum of 1-in. nominal diameter, unless otherwise shown on the Contract Drawings.

2) Adequately sized.

3) Of the same size as the drain pipeline specified herein.

4) Meet the requirements of Section 40 05 56, Process ValvesSmaller than Four-inch Diameter.

ii. Where drainage valves or appurtenances are located so that liquids can discharge and cause damage to a structure or equipment, the Contractor shall provide drain pipe to the nearest gutter or drain.

1) Provide a single drain pipe, matching the size of the drain valve and appurtenances, for each drain valve on the carrier pipe.

2) Unless otherwise shown on the Contract Drawings, the drain pipe shall be of Schedule 80 CPVC conforming to the requirements of Section 40 05 31, Thermoplastic Process Pipe and the installation requirements for thermoplastic piping specified herein.

3) A quick connect coupling shall be provided at the end of the drain line for attachment of a hose.

Venting:

jj. The Contractor shall provide all pipelines for liquids with vents at all high points in the lines.

1) Provide vents regardless of whether vent valves are shown on the Contract Drawings and/or the approved shop drawings.

kk. Vents shall consist of the following three (3) components:

1) An automatic air release/vacuum relief valve.

a) The valve shall have a cast or ductile-iron body and cover, stainless steel internals, and Viton or Buna N seal, unless otherwise specified.

2) An outlet vent line.

a) The outlet vent line from the valve shall be of Schedule 80 CPVC conforming to the requirements of Section 40 05 31, Thermoplastic Process Pipe and the installation requirements for thermoplastic piping specified herein.

b) Vent line shall terminate at a point approximately 3 ft above the floor.

3) An isolation ball valve:

a) A ball valve shall be provided between the carrier pipe and the automatic air/vacuum release valve to allow removal of the automatic air/vacuum release valve for repair or replacement.

b) The body of the isolation valve shall be:

(1) For vents < 4-in.: Type 316 Stainless Steel.

(2) For vents ≥ 4-in.: The same material as the body of the automatic air/vacuum release valve.

ll. Sizing:

1) For carrier pipelines ≤ 1-in.: Vents shall be the same size as the carrier pipe.

2) For carrier pipe > 1-in.: Vents shall be the size shown on the Contract Documents or 1-in., whichever is greater.

mm. Vent valves (both the automatic air/vacuum release and isolation valve) shall meet the requirements of one (1) of the following Sections, depending on the size of the vent valve:

1) Section 40 05 53, Process Valves Four-inch Diameter and Larger.

2) Section 40 05 56, Process Valves, Smaller than Four-inch Diameter.

Drip Pans:

nn. The Contractor shall provide drip pans under all metallic pipelines installed over electrical equipment and motors and conduct drainage to the nearest floor drain, gutter, or other drainage system with ¾-in. red brass pipe conforming to the requirements of Section 40 05 15, Copper and Brass Process Pipe, and installed as specified herein.

oo. Make the connection between the drip pan and the brass drain pipe leak-tight.

pp. Pitch the drip pan uniformly toward the drain pipe at a slope not less than ⅛-in. per lineal ft.

Insulation:

qq. Refer to Section 40 06 01, Schedule for Exposed Piping, and the Contract Drawings for the extent of insulated exposed piping.

rr. Insulation shall be installed after the installation and testing of exposed piping.

Hangers and Supports:

ss. Install pipelines with supporting devices in accordance with requirements of Section 40 05 07, Hangers and Supports for Process Piping.

tt. No piping shall be supported from metal stairs, ladders and walkways.

Restraints, Supports, and Thrust Blocks:

uu. Provide concrete and metal cradles, collars, kickers, and blocks as shown on the Contract Drawings.

Seismic Requirements:

vv. All piping and attached valves shall be supported and braced to resist seismic loads and in accordance with the SMACNA Seismic Restraint Manual.

Expansion and Contraction:

ww. The Contractor shall provide ample provisions for flexibility in all pipelines to compensate for expansion and contraction.

1) Unless other forms of expansion compensation are shown or specified, the Contractor shall:

a) Provide lengths of pipe shorter than the theoretical length to the extent of one half of the expansion, and install said lengths of pipe such that they may be free to expand without increasing the stresses imposed when cold.

2) Otherwise, the Contractor shall install all piping with expansion devices to allow for proper expansion and contraction.

a) Expansion devices shall allow the pipe to expand and contract freely without damage to any part of the piping system.

b) Expansion devices shall include, but not be limited to: expansion joints, expansion couplings, swivel or swing joints or pipe bends, including such anchors as may be shown, specified, or required to make the devices effective.

xx. Cold sprung pipe:

1) Install with metal filler pieces bolted between flanges or tack welded between weld joints.

2) After the pipe, anchors, hangers and supports have been installed, the spacers shall be removed and the joint made.

yy. Swing Joints:

1) For pipelines 2-in. nominal diameter or smaller, rated at working pressures up to 150 psig:

a) Screwed end swing or swivel joints may be used.

b) Otherwise expansion shall be taken up with nipples and fittings as required.

2) A sufficient number of fittings and pipe lengths in connection with swing joints shall be provided to assure the absence of distortion of either the pipelines or branches.

zz. Branch Tees:

1) Install branch tees on risers in locations that will allow the branch lines, when expanded by heat, to drain properly.

aaa. Pipe Expansion Bends:

1) Pipe bends of approved design for compensating thermal expansion when shown, specified or required shall be fabricated and furnished as herein specified.

2) In pipelines operating under high pressures or high temperatures in which offsets occur in alignment that may be subject to bending stresses excessive for the fittings, or where otherwise deemed necessary, use appropriate pipe bends to make the offset.

3) Where possible, all bends shall have radii equal to a least six diameters ($r = 6 \times d$) of the pipe and tangents or straight lengths of the pipe shall be neatly made, true to radius, free from buckles and flat surfaces.

bbb. Application guide and anchor requirements for expansion joints shall be in accordance with the recommendations of the manufacturer or the Standards of the EJMA.

ccc. The Contractor shall adjust all expansion devices after installation (but prior to operation) so that the pipelines shall be fluid-tight through the full range of operating conditions.

Wall Sleeves:

ddd. Where piping passes through walls, partitions, floors, roofs, or structures, provide wall sleeves of wearing material to prevent abrasion damage to piping.

1) Pipe sleeves shall be Schedule 40.

2) Sleeves through walls shall be flush with wall face.

eee. Anchor sleeves to concrete and masonry walls as shown on the Contract Drawings.

fff. All annular spaces in exterior walls or walls subjected to hydrostatic pressure shall be completely watertight.

ggg. Do not install sleeves and pipes through structural members unless specifically shown on the Contract Drawings.

Temporary Blind Flanges, Plugs, Caps, and Bulkheads:

hhh. At the end of each day of work or other interruption of pipe installation, the Contractor shall provide temporary blind flanges, plugs, caps, or bulkheads as necessary and required.

1) Plug all bells at dead ends, tees, and crosses.

2) Cap all spigot and plain ends.

iii. To perform the testing of exposed piping as specified herein, or as per the sequence of work specified in the Contract Documents, the Contractor shall provide temporary blind flanges, line stops, plugs, and bulkheads suitable for and capable of withstanding the services and pressures for which they are intended.

1) Refer to Section 40 06 01, Schedule for Exposed Piping, for service and test pressures.

2) Temporary blind flanges, line stops, plugs, and bulkhead shall be compatible with and shall not damage the piping materials, coatings, and linings specified in Section 40 06 01, Schedule for Exposed Piping.

jjj. The Contractor shall uninstall all temporary blind flanges, plugs, caps, and when they are no longer needed for the Work.

Flow Measuring Devices:

kkk. If not shown on the Contract Drawings, position flow measuring devices in pipe lines so that they have the amount of straight upstream and downstream runs recommended by the manufacturer, unless specific location dimensions are shown.

B. Ductile Iron Pipe:

Cutting:

a. Where field cutting of ductile iron pipe is permitted by the Engineer, ductile iron pipe shall be cut only by means of abrasive saws, hack saws, wheel type cutters or milling type cutters.

End Connections:

b. Mechanical Joint:

1) Ensure that cut ends are tapered and sharp edges are filed off smooth. Thoroughly clean the plain end (spigot) and the socket of the pipe or fitting.

2) Brush the socket, spigot end, gasket, and adjacent areas immediately before making joint with soapy water in accordance with AWWA C111.

3) Slip the gland and gasket over the spigot with the small side of the gasket facing the socket and the lip side of the gland facing the socket.

4) Insert the spigot into the socket and press the gasket firmly and evenly into the gasket recess. Keep the joint straight during assembly.

5) Slide the gland towards the socket and center it around the pipe with the gland lip against the gasket.

6) Insert bolts and tighten nuts by hand.

7) With an ordinary ratchet wrench, tighten bolts evenly and alternately around. The pattern for tightening bolts shall be as per the manufacturer's recommendations. The bolt torque for mechanical joints shall be as per the DIPRA Installation Guide.

8) Do not deflect mechanical joint pipe after installation.

c. Push-On Joint:

1) Ensure that the spigot (plain) end is beveled as per the manufacturer's recommendations and that sharp edges are filed off smooth.

a) Use a heavy file or grinder to bevel the plain end.

b) Do not use a saw blade to bevel the plain end.

2) Thoroughly clean the groove and the bell socket of the pipe or fitting. Also clean the plain end of the mating pipe or fitting.

3) Except for pipe lined or coated, use a wire brush to clean the exterior surface of the spigot and the interior surface of the bell.

a) Use a method for cleaning coated or lined portions of the pipe recommended by the coating or lining manufacturer.

4) Insert gasket into joint recess and smooth out entire circumference of gasket to remove bulges and to prevent interference with proper entry of spigot of entering pipe.

a) Use a rubber gasket recommended by the pipe manufacturer.

(1) Do not use gaskets that have been scored or otherwise damaged.

b) Wipe clean rubber gaskets and flex gaskets until resilient. follow the manufacturer instructions for gasket resiliency when assembling joints in cold weather.

c) As per the DIPRA Installation Guide, make at least one (1) small loop and then insert the gasket into the socket.

(1) For pipe sizes larger than 20-in. nominal diameter, it may be necessary to make two loops in the gasket opposite each other.

(2) Make sure the gasket faces the correct direction as per the manufacturer's instructions and that it is properly seated.

5) Apply lubricant as per the manufacturer recommendations to the surface of the gasket that will come in contact with the entering spigot. Also apply lubricant to the outside of the entering spigot.

(1) As per the DIPRA Installation Guide, do not apply lubricant to the bell socket or the surface of the gasket in contact with the bell socket.

6) Push the spigot end into the bell socket of the mating pipe or fitting, ensuring the joint remains straight.

a) Pause insertion when the spigot end just makes contact with the rubber gasket.

b) After the gasket is compressed and before the pipe is inserted completely, carefully check the gasket for proper position around the full circumference of joint.

c) Final assembly shall be made by inserting the spigot end of the entering pipe past the gasket until it makes contact with the base of the bell.

7) Deflect push-on joint pipe only after the joint is assembled and not exceeding the deflection shown on the Contract Drawings and the maximum deflection specified in the DIPRA Installation Guide for the nominal diameter of pipe in question.

d. Grooved / Shouldered End Joints:

1) Grooved and shouldered end joints and their installation shall conform to the requirements of AWWA C606.

2) Thoroughly clean the joint ends to remove foreign matter. Except for coated pipe, use a wire brush to clean the exterior surface of the joint ends.

a) Use a method for cleaning the coated portion of the pipe recommended by the coating manufacturer.

3) Remove the bolts from the coupling.

4) Apply lubricant to the rubber gasket or inside of the coupling housing and joint ends as per the manufacturer recommendations.

5) Position and install the gasket over the gap between the joint ends.

6) Install the coupling housing around the gasket and over the grooved or shouldered joint ends. Insert bolts and install nuts tightly by hand.

7) Tighten the bolts uniformly and according to the manufacturer's instructions.

e. Flanged Connections:

1) All flange faces shall be in perfect alignment with the holes straddling the vertical center line of the piping.

2) Properly center the gasket. Use full-face gaskets for flat-face flanges.

3) Gaskets shall be suitable for the service conditions referenced in Section 40 06 01, Schedule for Exposed Piping.

4) The gasket thickness shall be as recommended by the pipe manufacturer, with the exception that:

5) The minimum gasket thickness for raised face flanges shall be ⅛-in.

6) Bolts shall be of sufficient length so that when fully tightened, a minimum of two full threads shall extend beyond the nut.

7) Bolts shall be well lubricated over the entire thread length with a heavy graphite and oil mixture prior to the tightening operation.

8) Bolts shall be tightened with proper wrenches, care being taken to secure uniform pressure on the bolts and gasket and to avoid over stressing of the bolts, dishing of the flanges and compression of the gasket beyond its proper limits.

a) Commercial grade carbon steel bolts, ASTM A307, Grade B shall be tightened to obtain approximately 15,000 psi stress based on the root area of the thread.

b) Alloy steel bolts, ASTM A193, Grade B7 shall be tightened to obtain a stress of 45,000 psi.

c) The pattern for tightening bolts shall be as per the manufacturer's recommendations.

Support:

f. Provide supports for exposed ductile iron piping, fittings, appurtenances, and specials in accordance with the requirements of Section 40 05 07, Hangers and Supports for Process Piping. In addition:

1) Where shown on the Contract Drawings, ductile iron pipe beneath the ground floors of buildings or structures shall be encased in concrete to form an integral part of the floor slab.

a) This piping shall be included in the definition of exposed piping.

b) The reinforcement in the floor slab shall be placed and bent so that the pipe encasement is an integral part of the concrete structure.

c) Concrete for encasement:

(1) Shall be class 40.

(2) Shall conform to City requirements and specifications.

(3) Provide a 3-in. minimum depth of concrete between reinforcement and pipe or hanger components, and a 3-in. minimum depth covering on reinforcement.

C. Steel and Stainless Steel Pipe:

General:

a. Install in accordance with the best piping practice with a minimum exposure to the elements and to other corrosive conditions.

b. Before erection, all uncoated pipes shall be placed on end and hammered to remove scale and loose particles.

c. Pipe compounds:

1) For general service: Use an approved mastic metallic compound, Teflon tape, or approved equal shall be used.

2) For oil service: Use an approved compound resistant to oil.

3) For potable water: Use a NSF61 approved pipe compound.

End Connections:

d. Threaded Joint:

1) Pipe ends shall be reamed after pipe is cut to final length.

2) Threads shall be cleanly cut to the dimensions of the American Standard for Pipe Threads, ASME B1.1.

3) All burrs, dirt and foreign matter shall be removed and an application of pipe compound given to the threads of both pipe and fittings before assembly.

4) Apply a manufacturer's recommended joint compound prior to installation. Apply joint compound to male threads only.

5) Compound shall be eliminated at the inside of the joint.

6) Once a joint has been tightened, it shall not be backed off unless all threads are re-cleaned and new compound applied.

e. Flanged Connections:

1) All flange faces shall be in perfect alignment with the holes straddling the vertical center line of the piping.

2) Properly center the gasket. Use full-face gaskets for flat-face flanges.

3) Gaskets shall be suitable for the service conditions referenced in Section 40 06 01, Schedule for and Exposed Piping.

4) The gasket thickness shall be as recommended by the pipe manufacturer, with the exception that:

5) The minimum gasket thickness for raised face flanges shall be ⅛-in.

6) Bolts shall be of sufficient length so that when fully tightened, a minimum of two full threads shall extend beyond the nut.

7) Bolts shall be well lubricated over the entire thread length with a heavy graphite and oil mixture prior to the tightening operation.

8) Bolts shall be tightened with proper wrenches, care being taken to secure uniform pressure on the bolts and gasket and to avoid over stressing of the bolts, dishing of the flanges and compression of the gasket beyond its proper limits.

a) Commercial grade carbon steel bolts, ASTM A307, Grade B shall be tightened to obtain approximately 15,000 psi stress based on the root area of the thread.

b) Alloy steel bolts, ASTM A193, Grade B7 shall be tightened to obtain a stress of 45,000 psi.

c) The pattern for tightening bolts shall be as per the manufacturer's recommendations.

f. Welded Joints:

1) All welding of the following shall be in strict conformity with the Code for Pressure Piping, ASME B31.1, Section 6 and its Supplements:

a) Steel and stainless steel pipe.

b) Steel and stainless steel butt-welding fittings.

c) Steel and stainless steel fabricated fittings.

2) Welding shall not be done when the atmospheric temperature is less than 32°F or when surfaces to be welded are wet.

3) The surface to be welded shall be free from loose scale, slag, rust, paint, oil and other foreign material. Joint surfaces shall be smooth, uniform and free from fins, tears and other defects which might affect proper welding.

4) Backing rings shall be used for all pipe welding butt joints unless otherwise specified.

a) Backing rings shall be of carbon steel with spacer nubs that strike-off or melt with the weld.

5) Field Welding of Stainless Steel:

a) No field welding of any stainless steel pipe or fittings shall be permitted unless otherwise shown on the Contract Drawings.

6) Welding of Cement Lined Steel:

a) Welding of cement lined steel pipe will be permitted only with the approval and under the observation of the Engineer where such welding is shown on the Contract Drawings.

7) The ends of the lined pipe for pipe-to-pipe joints shall be machine cut to provide an approximate bevel of 27½°.

a) Bevels shall be accurately cut by machining or by a mechanically guided cutting torch.

b) Ends may be chipped provided there is no damage to the cement lining.

8) Where fittings already having a bevel of 37½° are to be welded to pipe, pipe ends shall be beveled to a 17½° angle, making a total angle of bevel between joints approximately 55°. A ⅛-in. land shall be provided where possible.

9) Parts to be joined shall be approximately $^{1}/_{32}$-in. apart before tacking.

a) Backing rings shall not be used at welded joints.

10) Piping shall be carefully aligned before welding and maintain alignment.

11) Small tack welds shall be made using a ⅛-in. electrode.

a) Defective tack welds shall be removed before the final weld is made.

12) The first bead or layer of welding shall be laid by bridging across from bevel to bevel at the bottom of the groove just at the top of the land. A suitable crown reinforcement layer shall be made on the top of the joint to finish off.

a) All layers of welding shall be of the same quality as the final welds and shall be fused thoroughly therein.

13) Direct current (dc) shall be used for welding, with the base material on the negative side.

14) Passes:

a) The first pass shall be a stringer bead using a ⅛-in. electrode with a current of 80A to 90A at 50V to 55V.

b) The second and succeeding passes shall be woven beads using a ⅛-in. electrode and a current of 90A to 100A at 55V to 58V.

c) All passes shall be made slowly and with care not to burn through the land or the shoulder into the lining of the pipe.

d) The joint shall not be hotter than 100°F.

e) For large size pipe, a $^{5}/_{32}$-in. electrode may be used, provided the temperature of the joint is held within this limit.

f) The surface of the finished welds shall have a bright metallic luster after cleaning, a fairly smooth and uniform contour with regular ripples and be free from overlaps, undercuts and excessive convexity.

15) No stress-relieving of welded joints is necessary unless the pipe wall thickness warrants it.

16) Welds shall be sound throughout, fused thoroughly and free from gas pockets, oxide, slag inclusions and surface porosity. The inside of the pipe shall be free from globules of weld metal, spacers or other material which would restrict the pipe area or become loose to enter the fluid stream.

17) Defective or unsound welds shall be corrected by removing and replacing the welds. Pipe or fittings which cannot be re-welded satisfactorily shall be replaced with new pipe or fittings at the Contractor's expense.

18) All welded joints will be visually inspected by the Engineer for defects beyond those acceptable in ANSI B31.1. Method of repair shall be in accordance with instructions as received from the Engineer.

19) Filling of Cement Lined Joints:

a) After the weld is completed, the joints in the lining shall be filled with a special compound of a wet slurry mix of the same cement used for the lining.

b) Where accessible from the end of the pipe, the welded joint shall be swabbed with cement using a paint brush thoroughly wetted with the cement slurry.

20) Repairing of Cement Lined Joints:

a) Any defects causing leaks in welded joints shall be repaired by welding without damaging the cement lining using the procedures specified herein.

Hangers and Supports:

g. In addition to the requirements of Section 40 05 07, Hangers and Supports for Process Piping, install steel and stainless steel pipelines in accordance with the applicable provisions of the Code for Pressure Piping, ASME B31.1, Section 6.

D. Copper and Brass Pipe:

End Connections:

a. Soldered Joints:

1) Cleaning:

a) After cutting, all surfaces to be soldered shall be thoroughly cleaned to a metal-bright finish, free from dirt, grease or other material before fluxing and soldering.

b) This cleaning shall be performed by using emery cloth, sandpaper, or steel wool.

c) Clean the outside end of the tubing for a length of ½-in. greater than the depth of the fitting. The inside of the fittings shall be cleaned in a similar manner.

d) Apply non-corrosive flux to both the outside of the tubing and the inside of the fitting.

(1) Acid solder or acid flux will not be allowed.

2) Assembly:

a) Assemble the joint by inserting the end of tube into full depth of fitting socket.

3) Solder:

a) Solder shall be 95-5 tin-antimony solder conforming to ASTM B32.

4) Joining:

a) The surfaces to be joined shall be heated up slowly and uniformly to the melting point of the solder.

(1) Heating torches of sufficient size shall be used for heating of large fittings prior to soldering.

(2) Multiple tips or ring burners for use on combination torches may also be used.

b) The surface being soldered shall be maintained above the melting point of the solder for sufficient time to draw the solder completely into the joint.

c) Form continuous solder bead around entire circumference of joint starting at the bottom.

d) When the solder congeals to a plastic state the excess metal shall be removed with a cloth brush, leaving a fillet around the end of the fitting.

e) Full penetration of the solder uniformly throughout the entire socket is required.

f) The soldered joints shall be allowed to cool in still air until only warm to the hand after which the work may be quenched.

5) Inspection of Joints:

a) Any type of crack, pinhole, area of incomplete penetration, or similar defect will not be accepted.

b) Peening for closing up defects shall not be permitted.

6) Cleaning:

a) Remove all external and internal loose solder and flux after joint cools.

b. Threaded Joints:

1) Use threaded joints for copper process piping any of the following locations:

a) When open flames for soldering are impractical

b) At unions and connections to equipment and appurtenances.

c) Where shown on the Contract Drawings .

2) Flaring for Threaded Joints:

a) Cut the end of the copper tube square and ream to remove burrs.

b) Tubing to be flared shall be soft temper or annealed prior to flaring.

c) Tube that is out of round prior to flaring should be resized back to round..

d) Clean and polish contact surfaces of joints using an abrasive cloth.

e) Place flare nut over end of tube with threads closest to end being flared.

f) Insert appropriate length of copper tubing between flaring bar of flaring tool and position yolk with flaring cone over tube end and clamp yoke in place.

g) Ends of tubing shall be flared at an angle of 45°.

h) Turn the handle of the yolk clockwise without over-tightening.

(1) Use a flaring tool recommended by pipe manufacturer in accordance with the pipe manufacturer's instructions.

i) Pipe joint compound (nor any other material) shall be applied to the mating surfaces of the flare fitting and the flared tube end before attaching the flare nut to the fitting body.

3) Inspection of Flared Joints:

a) Cracked or deformed tubes will be rejected.

c. Unions:

1) Regardless of whether shown or indicated on the Contract Drawings, runs shall contain unions at all connections to valves and equipment, and at distances that permit convenient disassembly of piping and removal of equipment.

Pipe Flexibility

d. Make ample provisions for flexibility in all copper and brass pipelines.

E. PVC and CPVC Pipe Installation

End Connections:

a. Solvent-Welded Joints:

1) Make all solvent-welded PVC and CPVC joints in accordance with ASTM D2855 and the solvent manufacturer's approved instructions.

2) For PVC pipe, use primers and solvent cements meeting the requirements of ASTM F656 and ASTM D2564, respectively.

3) For CPVC pipe, use solvent cements meeting the requirements of ASTM F493.

4) Do not make solvent cement joints if temperature is below 40°F.

5) Do not make solvent cement welded joints in wet conditions.

6) The following procedure shall be followed to ensure proper gluing of PVC and CPVC pipe.

a) Ensure the end of the pipe is beveled.

b) Apply primer to the female end.

c) Apply primer to the male end.

d) Reapply primer to the female end; the primer must not dry.

e) Apply glue to the male end using an appropriately sized brush.

f) Apply glue with the brush to the female end.

g) Reapply glue to the male end.

h) Join the male and female ends with a quarter turn twist and hold for 30 sec.

7) After joint assembly, wipe excess cement from the pipe. A properly made joint will show a bead around the entire circumference. Any gaps in this bead indicate a defective joint, and the Contractor shall remake such joints at no additional cost to the City.

b. Threaded Joints:

1) Cut the end of the thermoplastic pipe square and smooth with a knife or a file.

2) Thread the pipe in accordance with the pipe manufacturer's recommendations. Brush threads clean.

3) After threading pipe, starting with second full thread, and continuing over the thread length, wrap 100% virgin Teflon thread tape in the direction of the thread. Overlap each wrap by one-half width of tape.

4) After application of the Teflon thread tape, screw fitting or coupling onto the pipe end to be joined. Hand tighten. Then tighten the connection an additional one or two threads past the point of hand tightness.

F. Additional requirements for exposed steam service piping:

For steam service, adhere to the requirements for piping materials as specified in this Section. In addition, exposed piping for steam systems shall adhere to the following additional requirements.

End caps on pre-cleaned pipe shall not be removed until immediately before assembly. All open ends shall be capped immediately after completion of installation.

Steam systems piping shall have only threaded, welded, or flanged joints, as applicable and as specified.

a. Grooved or shouldered end joints shall not be used for steam service.

b. Welded End Connections:

1) All weld connections shall be in perfect alignment.

2) Use long radius elbows except at expansion bends where elbow radius shall be equal to six times the pipe diameter ($r = 6 \times d$) as specified herein.

a) Mitering of pipe to form elbows is not permitted.

3) Welding tees shall be used wherever the branch line diameter is equal to or one size smaller than the main line diameter. Otherwise the branches shall be fabricated using fittings of or equal to the Weldolet® or Sockolet® type.

4) Reinforced welded tees will be used only where shown on the Drawings. Tapped connections in welded lines shall be provided using fittings of or equal to the Thredolet® or Latrolet® type, welded to the piping.

c. Flanged End Connections:

1) All flange faces shall be in perfect alignment. Where steel flanges are bolted to flat face cast-iron flanges the raised face shall be removed.

2) Where flanges are to be connected directly to the welded fittings, only welding neck flanges will be allowed.

d. Threaded End Connections:

1) All threaded connections shall have full thread of true taper, accurate to gauge and conform to ANSI.

The use of bushings or close nipples is prohibited.

Screwed joints shall be made with an approved joint compound applied to the male thread only.

e. Caulking of screwed joints for steam service piping shall not be allowed.

In horizontal steam lines, reducing fittings shall be the eccentric type to maintain the bottom of the lines at the same elevation.

Slope:

f. All horizontal lines shall be pitched to facilitate draining.

g. Steam piping shall pitch down in the direction of flow at a rate of not less than ¼-in. per 10 ft.

h. All low points shall be provided with ¾-in. hose bibbs properly located so that the entire system may be drained.

i. Drain lines shall not have a pitch less than ⅛-in. per ft.

Risers:

j. The location of risers is approximate.

k. Exact locations of the risers shall be as approved.

l. Steam supply downfeed risers shall terminate in a dirt pocket and shall be dripped through a trap to the return line.

All closures should be suitable to withstand the hydrostatic test.

1.17 Field Testing / Quality Control

A. Test all exposed piping in accordance with the requirements of Section 01 43 10 - Contractor's Work Quality.

1.18 Startup / Demonstration

A. Not Used

1.19 Adjusting / Protection / Cleanup

A. Not Used

END OF SECTION

NO TEXT ON THIS PAGE

40 05 06 COUPLINGS, ADAPTERS, AND SPECIALS FOR PROCESS PIPING

GENERAL

1.01 Summary

A. The Contractor shall provide all labor, materials, equipment, incidentals, and appurtenances as shown, specified, and required to furnish, install, and test all couplings, adapters, and specials in pipelines, complete and operational.

1.02 Payment

A. There is no separate payment provision for this Section.

1.03 Related Sections

A. Section 09 91 00 – Painting.

B. Section 40 05 05 – Exposed Piping Installation.

C. Section 40 05 22 – Steel and Stainless Steel Process Pipe

D. Section 40 06 20 – Piping and Valve Schedule.

1.04 References

A. Reference Standards:

ASTM A47	Ferritic Malleable Iron Castings.
ASTM A193/A193M	Alloy-Steel and Stainless Steel Bolting Materials for High-Temperature Service.
ASTM A194/A194M	Carbon and Alloy Steel Nuts for Bolts for High Pressure or High Temperature Service, or Both.
ASTM A276	Stainless and Heat-Resisting Steel Bars and Shapes.
ASTM A283/A283M	Low and Intermediate Tensile Strength Carbon Steel Plates.
ASTM A744	Corrosion-Resistant Iron-Chromium-Nickel and Nickel-Base Alloy Castings for Severe Service.
ASTM B26	Aluminum-Alloy Sand Castings.
ASTM D2000	Classification System for Rubber Products in Automotive Applications.
ASME B1.1	Unified Inch Screw Threads (UN and UNR Thread Form).
ASME B18.2.2	Fasteners in Customary Uses - Hex Nuts.
ASME B31.1	Power Piping.
AWWA	C606 Joints, Grooved and Shouldered Type.

AWWA Manual M11 Steel Pipe - A Guide for Design and Installation.

1.05 Description

A. This Section includes requirements for providing couplings, adapters, and specials in accordance with applicable standards and regulations. In addition:

The scope of this Section shall include all buried and exposed process pipe.

The extent of process piping is shown on the Contract Drawings. Process pipe service, pipe diameter, pressure rating, joint type, and testing requirements are specified in the following section:

1.06 Quality Assurance

A. Qualifications of Manufacturers:

The manufacturer(s) shall have a minimum of five (5) years of experience in the design and fabrication of coupling, adapter, and specials of similar size, capacity, and type to those shown on the Contract Drawings and specified in the Contract Documents, and shall show evidence of at least five (5) substantially similar installations in satisfactory operation.

B. Supply and Compatibility:

Couplings, adapters, and specials shall be designed, fabricated, and installed in accordance with the latest standards referenced herein.

C. Regulatory Requirements:

Use only NSF61-approved materials in potable water lines.

Pipe couplings for making field joints between plain end, grooved end, and shouldered end pipe and fittings shall meet the requirements of ASME B31.1.

1.07 Submittals

A. Submittals shall comply with the requirements of the Contract Documents. In addition:

Action Submittals:

a. The Contractor shall submit the following Shop Drawings and material specifications for the approval of the Engineer:

1) Location of couplings, adapters, and specials in pipeline.

2) Catalog data showing dimensions, materials, and component parts of each type of coupling, adapter, or special.

3) Harnessing and restraints where required.

4) Associated pipeline materials.

5) Working and test pressures.

6) Additional product data sufficient to demonstrate compliance with the Contract Documents.

Information Submittals:

b. Manufacturer instructions for handling, storing, installing, and adjusting of products.

1.08 Delivery, Storage, and Handling

A. The Contractor shall deliver equipment and materials provided under this Section in accordance with the requirements of the Contract Documents.

B. The Contractor shall store equipment and materials provided under this Section in accordance with the requirements of the Contract Documents.

1.09 Spare Parts, Special Tools, and Supplies (refer to table in Section 40 61 22 , Article 1.09, E.)

A. Six (6) swivel joint spray nozzles, for the flushing systems of the same type, size, and service furnished.

1.10 Special Warranty Provisions / Guarantee Periods

A. Not Used

PRODUCTS

1.11 Manufacturers

A. Sleeve type couplings shall be as manufactured by:

For steel pipelines:

a. Style 38, as manufactured by Dresser Manufacturing, a Division of Dresser Industries, Bradford, PA.

b. Type 411, as manufactured by Smith-Blair Co., Texarkana, AR.

For ductile iron pipelines:

c. ≤ 12-in.:

1) Style 138, as manufactured by Dresser Manufacturing, a Division of Dresser Industries, Bradford, PA.

2) 12" and smaller - Type 441, as manufactured by Smith-Blair Co., Texarkana, AR.

For joining dissimilar piping materials:

d. Style 162, as manufactured by Dresser Manufacturing, a Division of Dresser Industries, Bradford, PA.

e. Type 441, as manufactured by Smith-Blair Co., Texarkana, AR.

f. Or approved equal

B. Bolted split sleeve type couplings shall be as manufactured by:

Non-flexible couplings:

a. Victaulic® Depend-O-Lok® Type 1 or 2, as manufactured by Victaulic Co., Easton, PA.

b. Or approved equal.

Flexible couplings:

c. Victaulic® Depend-O-Lok® EXE Type 1 or Type 2, as manufactured by Victaulic Co., Easton, PA.

d. Or approved equal.

C. Thread Lubricant:

G-N paste (Molycote), as manufactured by Dow-Corning Industries, Auburn MI.

Or approved equal.

1.12 Materials / Equipment

A. General:

Coupling design and construction shall facilitate easy assembly in the field.

Flexible couplings shall be designed and constructed to insure permanently tight joints under all conditions of expansion, contraction, shifting and settlement to which the pipelines may be subjected as a result of the operation and layout of the process system in which they are installed.

Rigid couplings shall be designed and constructed to provide a tight joint and prevent pipe movement at the joint.

B. Couplings shall be either one of the following two types:

Sleeve Type:

a. Sleeve type couplings shall be solid (axially un-split/unbolted) and have a middle ring or sleeve placed around the pipe joint.

b. The middle ring shall be sealed by two wedge-shaped gaskets evenly compressed by follower flanges or rings tightened by bolts and nuts.

Bolted Split Sleeve Type.

C. Sleeve Type Couplings:

General:

a. The maximum working pressure of the sleeve-type couplings shall be not be less than:

1) For pipe sizes ≤ 54 in.: 250 psig.

2) For pipe sizes > 54 in. 200 psig.

For Steel Pipe Lines:

b. Materials of Construction: steel.

c. The middle ring or sleeve and the follower rings or flanges shall be steel, ASTM A 283/A 283M (Grade A).

d. The middle ring or sleeve shall have flared or beveled ends.

e. The follower rings or flanges and the middle ring or sleeve shall be true circular sections free from irregularities, flat spots or surface defects.

f. The middle ring or sleeve shall not have a center pipe stop, unless otherwise specified, and shall have the minimum dimensions specified in Table 40 05 06-1.

TABLE 40 05 06-1

MINIMUM DIMENSIONS FOR SLEEVE TYPE COUPLING MIDDLE RING

Nominal Pipe Diameter: (in.)	Middle Ring Thickness: (in.)	Middle Ring Length: (in.)
≤ 8	¼	5
10 - 30	⅜	7
> 30	½	10

g. After welding, welded steel follower rings shall be sized and tested by cold expanding a minimum of 1% beyond the yield point.

For Ductile Iron Pipe Lines:

h. Materials of Construction:

1) For pipe sizes ≤ 12 in.: ductile iron or steel.

2) for pipe sizes > 12 in.: steel.

i. The middle ring or sleeve shall be ductile iron, ASTM A536.

j. The middle ring or sleeve shall have flared or beveled ends.

k. The follower rings or flanges shall be of ductile iron, ASTM A536, or malleable iron, ASTM A47 (Grade 32510), for pipe sizes 12-in. and smaller, and shall be of steel ASTM A283/A283M (Grade A) for pipe larger than 12-in.

l. The middle ring shall not have a center pipe stop, unless otherwise specified, and shall have the same minimum dimensions as specified above for couplings for steel pipe.

Gaskets:

m. Gaskets shall be resilient, wedge-shaped gaskets with a maximum angle of 40° at the wedge end.

n. Gasket material shall be compatible with the type and temperature of the fluid in the pipeline, and shall be the material recommended by the

manufacturer for the service specified in Section 40 06 01, Schedule for Exposed Piping.

D. Bolted Split-Sleeve Type Couplings:

General:

a. Couplings for large diameter steel piping shall be bolted, split-sleeve type.

b. Bolted split sleeve type couplings shall consist of four (4) basic components: two-piece housing, gasket assembly, bolts and nuts with restraining end rings as required for pipe restraint.

c. The selected couplings shall be designed for the type, size and working pressure of the pipe with which they are to be used.

Materials and Construction:

d. For stainless steel pipe: Coupling housing shall be manufactured from Type 316 stainless steel.

The split-sleeve coupling shall be constructed with a double arch cross section which closes around either:

e. pipe section ends that have been smoothed for expansion or contraction, or

f. pipe section ends with steel end rings affixed for restraining purposes.

The coupling shall confine an elastomeric gasket beneath the sleeve arches to create a radial seal as the coupling closes.

Elastomeric gasket materials shall have properties as designated by ASTM D2000 suitable for air service up to 240°F with intermittent exposure to 280°F.

Gasket sealing members shall consist of two O-ring gaskets and an elastomeric sealing pad bonded to an integral sealing plate. Internal pressure shall not be a requirement for fully completing the sealing function.

Restraining rings shall be furnished with the couplings and shall be of the same material as the coupling housing.

g. Restraining rings for fixed type couplings shall be shop welded to the piping by the piping fabricator.

h. The restraining rings shall be forwarded to the piping fabricator for shop mounting and welding in place.

i. The coupling manufacturer's recommendation for size and amount of welding required for properly attaching the restraining rings shall be followed without exception.

When deflection is required at a pipe joint, a flexible coupling shall be provided.

j. Minimum deflection for basic, lighter duty split sleeve (non-shouldered) design (e.g., Victaulic® Depend-O-Lok® Type 1) couplings shall be as specified in Table 40 05 06-3:

TABLE 40 05 06-3

MINIMUM DEFLECTION FOR BASIC, NON-SHOULDERED SPLIT SLEEVE COUPLINGS

Nominal Pipe Diameter: (in.)	**Minimum Deflection: (deg.)**
8 - 14	4.50
16-24	4.00
30 and 36	3.00
42 - 54	2.00
60	1.75
66 and 72	1.50
≥ 84	1.00

k. Maximum deflection for heavier duty (shouldered) design (e.g., Victaulic® Depend-O-Lok® Type 2) couplings shall be as recommended by the manufacturer.

l. Coupling width shall not be less than 10-in. for pipe sizes 8-in. through 84-in., and not less than 12-in. for larger size pipe.

m. Minimum wall thickness of couplings shall be computed by the following formula:

$$t = \frac{P \cdot d}{2s}$$

Where: P = Design pressure in psig.

d = Pipe O.D. in in..

s = 18,000 psig design stress.

Bolts, nuts and miscellaneous hardware shall be furnished by the coupling manufacturer and shall be Type 316 stainless steel conforming to ASTM A276 and having a minimum tensile strength of 85,000 psig.

E. Bolts and Nuts:

Bolts:

a. Bolts shall be Type 316 stainless steel, ASTM A 193/A 193M, Grade B8, Class 2.

b. Bolts shall have American Screw Threads, Coarse Thread Series, ASME B1.1.

c. For all sleeve-type couplings, bolts shall be double radius head or buttonhead track type. The collars under the heads shall fit oval or square holes in the follower rings.

d. For all groove-and shoulder-type couplings, bolts shall be track type oval neck bolts. The collars under the heads shall engage the oval slots in the housing.

Nuts:

e. Nuts shall be Type 316 stainless steel conforming to ASTM A194/A194M.

f. Nuts shall be American Standard Heavy Dimension Series, ASME B18.2.2.

F. Nozzles:

Flushing System Spray Nozzles shall:

a. Be Type 316 stainless steel

b. Have threaded connections of 2-inch nominal diameter

c. Have orifice size of 0.8 inches

d. Provide full cone spray pattern

e. Be fitted with swivel joint for adjustability post-installation

f. Be BETE Model NCK Nozzle Number NC 2048K or approved equal

g. Be provided with identification conforming to the requirements of Section 40 05 97 – Identification for Process Equipment

1.13 Fabrication / Assembling / Finishes

A. Not Used.

1.14 Source Quality Control / Shop Tests

A. Not Used.

EXECUTION

1.15 Examination / Preparation

A. Inspection:

The Contractor shall not install damaged items until repairs are made in accordance with manufacturer's written instructions and approval by Engineer.

a. All damaged items requiring remedial work shall be returned to the manufacturer for repair or replacement.

B. Preparation:

Ends of pipe, fittings and couplings shall be cleaned of all scale, dirt and thick outside coatings.

Before assembly, the ends of pipe and/or fittings and the outside of the coupling gasket shall be lubricated as recommended by the manufacturer.

Fasteners shall be assembled using a thread lubricant.

1.16 Installation

A. Install couplings, adapters, and specials for process piping in complete accordance with the manufacturer's printed installation instructions and the approved shop drawings. In addition:

Couplings shall be assembled by tightening diametrically opposite bolts evenly and progressively.

a. Bolts on sleeve-type couplings shall not be tightened beyond the point of stretching (when the mill scale on the shank begins flaking off).

b. Bolts on groove- and shoulder-type couplings shall be tightened only until there is metal to metal contact between housing segments and the pipe.

B. Harness for Sleeve-type Couplings:

In all pipelines under pressure, and elsewhere where shown, specified or required, sleeve-type couplings shall be harnessed.

a. On all pressurized steel pipe, cast steel "crow-foot" lugs shall be welded on diametrically opposite sides of the pipe, and the joint shall be harnessed with stainless steel tie-bolts and nuts.

1) The dimensions, sizes, spacing and materials for lugs, tie-bolts and nuts shall be based on the use of a minimum of two bolts and four lugs per joint, in conformity with Section 13 (Table 13.4) of AWWA Manual M11 or the standard specifications of the coupling manufacturer for the pipe size, wall thickness and test pressure specified.

2) Welding shall conform to the requirements specified under Section 40 05 22 - Steel and Stainless Steel Pipe.

1.17 Field Testing / Quality Control

A. Not Used

1.18 Startup / Demonstration

A. Not Used

1.19 Adjusting / Protection / Cleanup

A. Not Used

END OF SECTION

40 05 07 HANGERS AND SUPPORTS FOR PROCESS PIPING

GENERAL

1.01 Summary

A. The Contractor shall provide all labor, materials, equipment, incidentals, and appurtenances as shown, specified, and required to furnish, install, and test all hangers, supporting devices, and appurtenances shown, specified or required for pipes, fittings, valves, and other in-line equipment, complete and operational.

1.02 Payment

A. There is no separate payment provision for this Section.

1.03 Related Sections

A. Section 05 50 00 – Metal Fabrications

B. Section 09 91 00 – Painting.

1.04 References

A. Reference Standards:

ASTM A 36	Standard Specification for Carbon Structural Steel.
ASTM A 48	Standard Specification for Gray Iron Castings.
ASTM A 276	Standard Specification for Stainless and Heat-Resisting Steel Bars and Shapes.
ASTM A283	Standard Specification for Low and Intermediate Tensile Strength Carbon Steel Plates, Shapes and Bars.
ASTM A778	Standard Specification for Welded, Un-annealed Austenitic Stainless Steel Tubular Products.
ASME - B31.1	Power Piping.
N.Y. Spec 32-P-6	Pipe, Special Castings, Valve Box Castings: Cast-Iron.
MSS SP-58	Pipe Hangers and Supports - Materials, Design and Manufacture.
MSS SP-59	Short Radius Welding Fittings.
MSS SP-69	Pipe Hangers and Supports - Selection and Application.
MSS SP-89	Pipe Hangers and Supports - Fabrication and Installation Practices.
MSS SP-90	Guidelines on Terminology for Pipe Hangers and Supports.

ASTM A 123	Specification for Zinc (Hot-Dip Galvanized) Coatings on Iron and Steel Products.

Latest Edition of the New York City Building Code.

1.05 Description

A. This Section includes requirements for providing hangers and supports for process piping in accordance with applicable standards and regulations.

Included are rod hangers; clevis hangers, spring hangers; stanchion, roller and pipe pole supports and saddle stands; supports of structural steel; concrete saddles, concrete anchor blocks and bases, and all necessary guides, restraints, fastening devices, anchor bolts, pipe anchors and appurtenances.

The Contractor shall provide all temporary pipe supports required during construction.

The Contractor shall provide hangers and supports of sufficient strength to maintain the pipelines and appurtenances in proper position and alignment under the maximum combination of peak loading conditions to include pipe weight, process fluid/gas weight, process fluid/gas movement and pressure forces, thermal expansion and contraction, vibrations, seismic forces, and all probable externally applied forces for all operating conditions.

The Contractor may retain the services of a pipe support designer for providing the design of all piping hangers and support systems in accordance with the requirements of this Section, unless otherwise shown or specified.

Stressors in hangers, rods and brackets shall be in accordance with Table 2 of MSS-SP-58.

1.06 Quality Assurance

A. Qualifications of Manufacturer and Pipe Support Designer:

Pipe hangers, supports, and appurtenances shall be standard products of the manufacturer specified herein.

Each type of hanger and support shall be the product of a single manufacturer.

The pipe support designer, if retained by the Contractor, shall have a minimum of five (5) years of experience in the design of pipe supports and shall show evidence of having completed at least five (5) substantially similar, successful pipe support projects of equal complexity as the systems specified.

a. The pipe support designer shall be a New York State Registered Professional Engineer.

B. Supply and Compatibility:

All hangers and supports for process piping included in this section shall be provided by the Contractor through a single, qualified ductile iron process pipe manufacturer.

The pipe and fittings shall be designed, fabricated, and installed in accordance with standards referenced herein.

C. Regulatory Requirements:

All hangers and supports shall conform to the applicable requirements of ASME B31.1, MSS SP-58, SP-59, SP-69 and SP-90, except as modified herein, and be of standard manufacture wherever possible, and best suited for the service required.

Unless otherwise approved, all hangers, supports and concrete inserts shall be listed with Underwriters' Laboratory, Inc.

1.07 Submittals

A. Submittals shall comply with the requirements of the Contract Documents. In addition, submittals shall include, but not be limited to:

Action Submittals:

a. Shop Drawings shall include, but not be limited to:

1) Detailed drawings showing all hangers and supports for each piping system. Drawings shall show:

a) Location, installation, material, loads, forces, stresses and deflections of all hangers and supports.

b) Reaction forces imparted to structures to which hangers and supports are attached shall be shown.

c) Contractor shall provide detailed drawings of each pipe support. Each drawing shall contain enough information to verify the pipe support design and to allow the manufacture of the device. At a minimum, the Contractor shall submit:

(1) Scaled details of the device with dimensions.

(2) A table of applied forces and moments.

(3) A complete bill of materials.

(4) An isometric showing the applied forces and moments.

(5) Detailed connections to existing structure.

(6) Shop and field welds.

2) Manufacturer's catalogs and engineering data on all hangers and supports.

3) Load ratings.

4) Materials.

5) Installation details.

b. Submit the name and qualifications of the support and hanger engineer.

c. All drawings and design calculations included in the shop drawings shall be signed and sealed by a New York State Registered Professional Engineer.

d. Pipe support design shall include detailed load and movement calculations:

1) In the design of hangers, supports and anchors, unless otherwise shown or specified, pipe pressures shall be the maximum test pressures specified for pipelines carrying gases and twice the maximum test pressures specified for pipelines carrying liquids.

2) The following loads shall be included in pipe support design and pipe stress analysis:

3) The gravity force, including the weight of the pipeline plus the weight of any appurtenances, contents, insulation, etc.

4) The thermal expansion force developed by the restraint of free end displacement of the piping.

5) Hydrostatic forces developed by internal pressure during operation of the piping system.

6) Loading due to expansion joint reaction forces.

7) Seismic forces, as required by the latest edition of the New York City Building Code.

8) Occasional load calculations and pipe stress analysis shall be provided where required by the Contract Documents, Building Codes, or Standards referenced herein. Occasional loads include:

a) Seismic forces.

b) Pressure waves produced by sudden changes in fluid momentum, commonly referred to as water hammer.

c) Wind, snow or ice loads.

d) Safety valve thrust loads.

e. Calculated forces shall be included in the pertinent shop drawings as called for by the submittal requirements specified herein.

Information Submittals:

f. When equipment or appurtenance manufacturers have indicated that piping loads shall not be transmitted to their equipment or appurtenance, certification that from said manufacturer(s) that the Contractor's hanger and support design complies with said manufacturer(s) requirements. Submit a separate certification for each equipment or appurtenance bearing piping loads supported, in whole or in part, by Contractor's hanger and support design.

B. Each submittal package for pipe hangers and supports shall have the stamp of a New York State Registered Professional Engineer experienced in pipe support design.

1.08 Delivery, Storage, and Handling

A. The Contractor shall deliver equipment and materials provided under this Section in accordance with the requirements of the Contract Documents. In addition:

Hanger inserts which are to be embedded in cast-in-place concrete shall be delivered in ample time not to delay the Work.

B. The Contractor shall store equipment and materials provided under this Section in accordance with the requirements of the Contract Documents. In addition:

Hangers and supports shall be protected from condensation, corrosion, and deterioration.

1.09 Spare Parts, Special Tools, and Supplies

A. Not Used

1.10 Special Warranty Provisions / Guarantee Periods

A. Not Used

PRODUCTS

1.11 Manufacturers

A. Not Used

1.12 Materials / Equipment

A. General:

The Contractor shall provide hangers and supports for all process piping and associated appurtenances, including, but not limited to valves, fittings, and specials, as follows:

a. Where shown on the Contract Drawings: Provide hangers and supports as shown and as specified herein.

b. Where not shown on the Contract Drawings: Provide hangers and supports in compliance with MSS SP-58 Table 2, and the requirements specified herein.

All hangers and supports shall allow minimum 3-in. of vertical adjustment.

B. Types:

Hangers for Single Pipes:

a. Single pipes shall be supported by hangers suspended by rods from structural steel members, inserts in concrete ceilings and beams, bottom of trapeze hangers and wall mounted steel angle brackets. The strength of the rod shall be based on its root diameter.

b. Except for piping subject to thermal expansion and contraction or as otherwise shown or specified, pipe hangers shall be adjustable clevis type MSS SP-58 Type-1.

c. Piping subject to thermal expansion and contraction shall be supported on rollers.

Hangers or Supports for Multiple Pipes:

d. Multiple pipes, running parallel in the same horizontal plane, and adjacent to each other, shall be suspended by trapeze type hangers or supported on wall brackets. Trapeze hangers shall consist of channel sections supported from threaded rods or attached to concrete walls, columns or structural steel support members.

e. Except as otherwise specified herein, pipe anchors used for attaching pipe to trapeze or multiple pipe wall brackets, shall be anchor or pipe chairs as required.

Supports for Single Pipe:

f. Single pipes located in a horizontal plane close to the floor shall be supported by one of the methods specified herein or as shown on the Contract Drawings.

g. Pipes shall be supported by adjustable stanchions, pipe saddle or roll supports with "U" bolts. Stanchions shall provide at least 4-inches adjustment and be flanged-mounted to floor.

h. Stanchions and saddle stands shall be of Type 316L stainless steel.

i. Pipe pole supports for pipe runs above ground, out-of-doors, and where otherwise required, shall consist of a suitable length of stainless steel pipe set upright in at least four feet of concrete; two stainless steel angles secured to the top of the pipe, at right angle and on each side; a stainless steel plate welded to the top of the angles to serve as a horizontal support for the pipes. Supports shall be provided with attachments in the form of stands, clamps, rolls, rods or similar devices of the screw adjustable type in the vertical direction.

j. Where specified or shown, column supports of built-up welded stainless steel shall be provided, as approved by the Engineer.

k. Pipe rollers shall be cast ductile iron, unless otherwise shown or specified. Hardware and appurtenances shall be stainless steel.

Wall Supported Pipes:

l. Single or multiple pipes located adjacent to walls, columns or other structural members, and an excessive distance from ceilings or underside of beams, shall be supported using stainless steel wall brackets, MSS SP-58 Type 32 or 33.

m. Where pipes rest on top of bracket pipe supports, pipe anchors used for attaching pipe to trapeze or multiple pipe wall brackets shall be anchor or pipe chairs as required

Supports for Base Elbows:

n. Where pipes change direction from horizontal to vertical through a bend, a welded or cast base anchor support shall be installed at the bend to carry the load.

Supports for Vertical Pipes:

o. Pipe riser clamps shall be used to support all vertical pipes extending through floor slabs.

p. Riser clamps shall be MSS SP-58 Type 42 or 8.

q. Insulation shall be removed from insulated pipes prior to installing riser clamps.

Concrete Supports:

r. Where pipeline or mechanical equipment is shown, specified or required to be supported on concrete supports, supports shall be as specified herein.

s. Concrete supports for equipment shall be of a size and mass that will resist all forces, both static and dynamic, which may be developed by the equipment.

t. Concrete supports for pipe, fittings, valves and appurtenances shall be designed to carry the weight of the pipeline and appurtenances.

1) Cradles and anchor blocks shall safely withstand all stresses imposed by the pipelines, under all operating conditions.

2) Concrete cradles shall be shaped to fit the contour of the pipe.

u. Concrete supports shall be anchored to the floor of main structures by doweling or other approved means.

1) Anchor bolts, extension plates, saddle yokes and other hold-down devices in concrete bases shall be placed before pouring of concrete.

2) Expansion bolts shall not be used on new concrete supports except with the specific approval of the Engineer.

v. Concrete supports shall be not less than Class 25 and as specified in City specifications.

C. Materials:

Hangers and supports shall conform to ASME B31.1.

Structural steel shall conform to ASTM A36 and ASTM A283.

Iron castings shall conform to ASTM A48 (Class No. 35).

Stainless steel shall conform to ASTM A 276:

a. Use type 316 stainless steel for non-welded items.

b. Use type 316L stainless steel for welded or fabricated items.

c. Tensile Strength: 70,000 psi, minimum.

d. Yield Strength: 25,000 psi minimum.

e. Elongation in 2-in.: 35%.

f. Reduction of area: 45%.

g. For stainless steel pipe and tube: Use type 316L stainless steel conforming to the requirements of ASTM A778.

Rollers:

h. Rollers, including stands and bases, shall be of cast iron, hot-dipped galvanized conforming to ASTM A123.

Expansion anchors for use in existing concrete structure:

i. Material shall be Type 316 stainless steel.

Hanger Rods:

j. Material shall be Type 316 stainless steel.

k. Maximum allowable working stress shall be 5,800 psi, calculated based on the root diameter.

l. Rods shall have a square head nut on top and running thread on bottom end.

Supports:

m. Material shall be Type 316 stainless steel, unless otherwise indicated.

Appurtenances:

n. Brackets, guides, restraints, rods, bolts, nuts and anchors shall be Type 316 stainless steel unless otherwise specified.

o. Concrete inserts shall be of malleable iron with galvanized finish.

D. Sizing:

Size single and double rods based on the nominal pipe diameter in accordance with the Table 40 05 07-1.

a. Hanger loads shall be calculated based on the weight of pipe filled with water plus 50 psf of dead load.

TABLE 40 05 07-1

MINIMUM PERMISSIBLE HANGER ROD DIAMETER FOR NOMINAL PIPE SIZES

Pipe Size (in.)	Single Rod (in.)	Double Rod (in.)	Max. Load per Hanger (lbs.)
¾ to 1½	⅜	⅜	300
2	⅜	⅜	325
2½	½	⅜	350
3	½	⅜	400
3½	½	⅜	450
4	⅝	½	850
5	⅝	½	950
6	¾	⅝	1,075
8	*⅞	⅝	1,350
10	*⅞	⅝	1,750
12	*⅞	¾	2,200
14	*1	⅞	2,500
16	*1	⅞	3,075
18	*1	⅞	3,700
20	*1¼	1	4,425
24	*1¼	1	6,050

* To be used subject to the Engineer's specific approval

E. Concrete Inserts, Attachment Plates, and Clamps:

Hanger Rods:

a. Hanger rods up to ⅞-in. diameter: Shall be attached to new concrete structures using concrete inserts of Type 18 in MSS SP-58.

1) Inserts shall be malleable iron with galvanized finish.

a) The use of steel inserts is prohibited.

2) Design of the inserts shall permit the rods to be adjusted laterally in one plane and to lock the rod nut or head to the body.

3) The inserts shall be provided with openings or recesses to receive reinforcing rods.

4) To facilitate installation, slots shall be provided in the exposed flanges of the insert.

5) Inserts shall be rated to safely carry the maximum load which can be supported by the hanger rod.

b. Hanger rods larger than ⅞-in. diameter: Shall be attached to new concrete by means of approved hook anchors as shown on the Contract Drawings.

c. All hanger rods shall be attached to existing concrete structures using stainless steel expansion anchors as specified in Section 05 50 00 - Metal Fabrications.

Steel beam clamps:

d. Shall be malleable iron.

e. For wide flange or I-beams: conform to MSS SP-58 Type 28 or Type 29.

f. For channel sections or where it is necessary to locate the hanger rod off the beam centerline: conform to MSS SP-58 Type 20.

Steel U-shape beam attachments welded to the underside of beams and welded steel brackets fastened to structural steel columns:

g. Shall be subject to specific approval of the Structural Steel and Pipe Supports Shop Drawings.

1.13 Fabrication / Assembling / Finishes

A. Painting:

Conform to the requirements of Section 09 91 00, Painting.

1.14 Source Quality Control / Shop Tests

A. The Engineer may elect to conduct shop inspections. The inspections may include but not be limited to: mechanical and chemical testing, material sampling, material certifications, traceability of parts, blasting and painting, visual and dimensional inspection, and free iron contamination check on stainless steel parts.

EXECUTION

1.15 Examination / Preparation

A. The Contractor shall coordinate the Work such that all process piping hangers, supports, and restraining systems shall be installed and secured prior to the testing or activation of the process pipeline on which they are installed.

1.16 Installation

A. Design:

Types of hangers and supports shall be kept to a minimum.

Wherever possible, pipe supports shall be designed using manufacturer's standard catalog products.

Hangers and supports shall be located to prevent vibration or swaying and to provide for expansion and contraction.

Hanger and support units installation methods shall be in accordance with manufacturer's recommendations.

Hangers and Supports for piping systems subject to thermal expansion and contraction, or to similar movements imposed by other sources, shall be designed to provide flexibility, and pipe stress analysis shall be provided.

a. Hangers and supports shall provide for expansion and contraction throughout the full operating temperature range.

Where resonance with imposed vibration and/or shock occurs during operation, suitable dampeners, restraints, anchors, etc., shall be added to remove those effects.

Hangers' rods shall be straight and vertical. Chain, wire, strap or perforated bar hangers shall not be used. Hangers shall not be suspended from piping.

Contact between dissimilar metals shall be prevented by use of copper plated, rubber or vinyl coated hangers or supports.

B. Hangers and Supports Embedded in Concrete:

Concrete embedded items shall be installed before concrete placement.

Embedded items shall be fastened securely to prevent movement during concrete placement.

Hangers and supports shall be adjusted and grout placed as specified in Section 03 60 00, Grouting, to bring pipelines to specified elevations.

C. Supports and Hangers for Horizontal Pipes:

Supports and hangers for all piping shall be placed no farther apart than shown below, unless otherwise shown or specified:

a. For ductile iron and stainless steel pipe:

1) Maximum spacing in accordance with Table 3 of MSS-SP-69. The designer should check the capacity of the steel or building structure to which the hanger or support is attached, and adjust the maximum spacing accordingly.

2) In addition, ductile iron pipe shall have a minimum of two supports per length and shall have a hanger or support adjacent to each end.

b. Tubing less than 1-inch diameter: In accordance with best piping practice and ASME B31.1, and as approved by the Engineer.

Hangers, supports, and accessories shall be located within maximum span lengths specified to support continuous pipeline runs unaffected by concentrated loadings.

Where hanger or support spacing does not correspond with joist or rib spacing, structural steel channels shall be attached to joists or ribs, and the pipes suspended therefrom.

D. Supports for Vertical Piping:

Spacing:

a. Vertical piping shall be supported at each floor and between floors by stays or braces to prevent rattling and vibration. Maximum spacing shall not exceed 25 ft.

Riser Clamps:

b. Riser clamp shall be placed under hub, fitting or coupling with approved solid bearing on steel sleeve.

Base elbows or welded equivalent shall be provided at vertical piping bases.

Top support shall have a horizontal connection, and shall provide for pipe expansion.

E. Pipelines installed under plumbing work shall be spaced in conformity with the requirements of the New York City Building Code or as specified herein.

F. Additional Supports:

In addition to any and all requirements for the placement of supports specified herein, the Contractor shall provide additional supports as follows:

a. Additional supports shall be placed immediately adjacent to any change in piping direction, at equipment, and on both sides of valves, expansion joints and couplings.

b. Suspended or supported ductile iron pipe shall have a hanger or support adjacent to each hub or flanged end.

c. Except where otherwise shown or required, horizontally valves 6-inches and larger shall be supported on each side of the valve, by pipe hangers or supports.

d. At all flexible couplings, supports shall be placed on each side and as close to the coupling as possible. Supports shall be the guide type which prevent axial movement from resulting in pipe deflection and misalignment.

e. Supports, anchorage and guidance for grooved end pipe shall be in accordance with the applicable sections of these specifications and the recommendations of the manufacturer.

G. Anchors and Sway Braces:

Anchors and sway braces shall be provided when required to hold the pipelines and equipment in position or alignment. Pipe anchors and braces for rigid fastening to the structures shall be attached to stainless steel anchor plates and anchor bolts set into the forms when placing concrete of new structures. Brackets and braces shall be attached to existing concrete structures with through bolts or expansion anchors.

Anchors, guides and restraints shall be provided for the proper operation of pipeline expansion joints.

Cast iron anchors shall be provided with stainless steel straps on piping, except where anchors form an integral part of pipe fittings and couplings or where an anchor of special design is required or shown on the Contract Drawings.

All pipe anchors, guides and restraints shall be designed to conform to ASME B31.1.

H. Expansion Joints and Flexible Couplings:

Supports, guides and anchors for flexible couplings and expansion joints shall be in accordance with the coupling and joint manufacturer's specification and the standards of the Expansion Joints Manufacturers Association.

I. Adjustability:

Hangers and supports shall be capable of adjustment after placement of piping.

All points of adjustment for pipe and duct hanger rods shall be locked securely in place using double-nutting. Double-nutting means two nuts torqued directly against each other under each point of adjustment in addition to a third nut on top of the bracket. Damaging threads or tack welding as a method of locking adjustment is not permitted.

All threaded assemblies shall be double nutted or provided with pinned nuts. Alternately, tack welding of bolted assemblies may be acceptable unless provisions for vertical adjustment is required.

J. Any required pipe supports, for which the supports called for in this Section are not applicable, shall be fabricated or constructed from standard stainless steel shapes, concrete and anchor hardware, and shall be subject to the approval of Engineer.

1.17 Field Testing / Quality Control

A. Each pipe support system shall be tested in conjunction with the respective piping pressure tests.

Tests shall include cycling the piping system to duplicate operating conditions.

If any part of the pipe support system proves to be defective or inadequate, as evidenced by vibration or excessive movement, it shall be repaired or augmented at no additional cost to the City.

1.18 Startup / Demonstration

A. Not Used

1.19 Adjusting / Protection / Cleanup

A. Touch-up shall be provided in the field, as required. Coating touchup shall be applied in accordance with the manufacturer's recommendations, and shall be free from spots and brush marks, to the satisfaction of the Engineer.

END OF SECTION

40 05 19 DUCTILE IRON PROCESS PIPE

GENERAL

1.01 Summary

A. The Contractor shall provide all labor, materials, equipment, incidentals, and appurtenances as shown, specified, and required to furnish, install, and test all ductile iron process pipe complete and operational.

B. Schedules:

Refer to Section 40 06 20 for additional information on the piping that is to be constructed using the pipe materials and methods specified herein.

1.02 Payment

A. There is no separate payment provision in this Section.

1.03 Related Sections

A. Section 33 05 05 – Buried Piping Installation.

B. Section 40 05 05 – Exposed Piping Installation.

C. Section 40 05 06 – Couplings, Adapters, and Specials for Process piping.

D. Section 40 05 07 – Hangers and Supports for Process Piping.

1.04 References

A. Reference Standards:

AWWA C104	Cement-Mortar Lining for Ductile-Iron Pipe and Fittings for Water
AWWA C110	Ductile-Iron and Gray-Iron Fittings, 3-in. through 48-in., for Water and Other Liquids
AWWA C111	Rubber-Gasket Joints for Ductile-Iron Pressure Pipe and Fittings
AWWA C115	Flanged Ductile-Iron Pipe with Ductile-Iron or Gray-Iron Threaded Flanges
AWWA C151	Ductile-Iron Pipe, Centrifugally Cast, for Water
AWWA C153	Ductile-Iron Compact Fittings, 3-in. through 24-in. and 54-in. through 64-in., for Water Service
AWWA C606	Grooved and Shouldered Joints
ASTM B98	Copper Silicon Alloy Rod, Bar and Shapes
ASTM C283	Resistance of Porcelain Enameled Utensils to Boiling Acid
ANSI/ASME B16.1	Cast Iron Pipe Flanges and Flanged Fittings

DIPRA	Handbook of Ductile Iron Pipe
NY Spec 24-C-38	Caulking
New York City Building Code	

1.05 Description

A. This Section includes requirements for providing ductile iron process pipe and accessories in accordance with applicable standards and regulations. In addition:

The scope of this Section shall include all ductile iron process pipe, fittings, and specials.

The extent of ductile iron process piping is shown on the Contract Drawings. Ductile iron process pipe service, pipe diameter, coating, lining, pressure rating, joint type, and testing requirements are specified in the following section(s):

a. Section 40 06 20 – Process Pipe and Valve Schedule

Ductile iron process pipe, fittings, appurtenances, and specials shall be furnished and installed complete with all necessary jointing materials, wall castings, wall sleeves, specials, adapters, and other appurtenances as shown on the Contract Drawings, as specified herein, and/or as necessary and required for a complete installation.

b. Couplings for ductile iron process pipe shall be provided as specified in Section 40 05 06, Couplings, Adapters, and Specials for Process piping.

c. Hangers and support for ductile iron process pipe shall be provided as specified in Section 40 05 07, Hangers and Supports for Process Piping.

Where shown on the Contract Drawings, the Contractor shall provide all labor and materials for making connections between ductile iron process pipe and existing lines(s) installed under other contracts, including all specials required to connect ductile iron process pipe to pipe of dissimilar material(s).

The scope of this Section shall include all painting, coating, lining, gaskets, harnesses, bolts, nuts, and other appurtenances and material required to provide and assemble the lines.

1.06 Quality Assurance

A. Qualifications of Manufacturer:

The manufacturer shall have a minimum of five (5) years of experience in the design and fabrication of ductile iron process pipe, fittings, appurtenances, and specials of similar size, capacity, and type to those shown on the Contract Drawings and specified in the Contract Documents, and shall show evidence of at least five (5) substantially similar installations in satisfactory operation.

Linings and coatings:

a. Lining and coating manufacturer shall have a minimum of five (5) years of experience in protecting pipelines exposed to the service conditions specified in the Contract documents, and shall show evidence of at least five (5) substantially similar installations in satisfactory operation.

When linings and coatings are not applied by the manufacturer, the lining and coating Subcontractor shall have a minimum of five (5) years of experience in the application of the specified linings and coatings for the specified service, and shall show evidence of at least five (5) substantially similar installations.

B. Supply and Compatibility:

All ductile iron process pipe, fittings, appurtenances, and specials included in this section shall be provided by the Contractor through a single, qualified ductile iron process pipe manufacturer.

The pipe and fittings shall be designed, fabricated, and installed in accordance with standards referenced herein.

The manufacturer shall bear responsibility for the quality of all factory-applied linings and coatings, regardless of the location of application.

The manufacturer shall verify compatibility between the ductile iron process pipe, fittings, appurtenances, specials, and other Work.

C. Regulatory Requirements:

Ductile iron process pipe shall conform to the American National Standards Institute (ANSI) and American Water Works Association (AWWA) Standards specified herein and recommendations as given in the Ductile Iron Pipe Research Association (DIPRA) “Handbook of Ductile Iron Pipe.”

Ductile iron pipe for City water shall conform to the rules and regulations of the Bureau of Water Supply; requirements contrary to such rules and regulations specified herein shall be disregarded.

1.07 Submittals

A. Submittals for all ductile iron process pipe shall comply with the requirements of, and Section 40 05 05, Exposed Piping Installation.

1.08 Delivery, Storage, and Handling

A. The Contractor shall deliver materials provided under this Section in accordance with the requirements of the Contract Documents. In addition:

Pipes shall be loaded on properly padded saddles not less than 6-in. in width so that they do not bear against each other.

The whole load shall be securely fastened together as well as to any vehicle to prevent movement in transit.

B. The Contractor shall store and handle materials provided under this Section in accordance with the requirements of the Contract Documents. In addition:

Special care in handling shall be exercised during delivery, storage and handling of pipe to avoid damage and setting up stresses. Pipe and specials stored prior to use shall be stored in such a manner as to keep the interior free from dirt and foreign matter.

When required for maintaining its circular shape and preventing distortion, each length of pipe shall be temporarily braced with an approved type of internal spider in each end of the pipe during erection.

Handling Coated Pipe:

a. Coated pipe shall be protected at all times and handled with equipment designed to prevent damage to the coating, such as stout wide canvas slings and wide padded skids.

1) The use of bare chains, cables, hooks, metal bars or narrow skids in contact with the coating will not be permitted.

b. All pipe handling and hauling equipment shall meet the approval of the Engineer before use.

1.09 Spare Parts, Special Tools, and Supplies

A. Not Used

1.10 Special Warranty Provisions / Guarantee Periods

A. Not Used

PRODUCTS

1.11 Manufacturers

A. Ductile iron process pipe and fittings shall be as manufactured by the following:

American Cast Iron Pipe Co., Birmingham, AL;

McWane Inc., Birmingham, AL;

U.S. Pipe and Foundry Co., Birmingham, AL;

Or approved equal.

B. Expansion Joints:

Series 500, as manufactured by Mercer Rubber Company, Hauppauge, NY;

Or approved equal.

C. Flanged Adapters:

McWane Inc., Birmingham, AL;

Smith-Blair, Inc., Texarkana, AR;

Or approved equal.

1.12 Materials / Equipment

A. Pipe shall be in accordance with AWWA C151 for push-on or mechanical joint pipe and AWWA C115 for flanged pipe and shall be of grade 60-42-10 ductile iron. The above standards cover ductile iron pipe with nominal pipe sizes from 3-in. up to and including 64-in. in diameter. Working pressure for the pipe shall be as called for in these Standards.

B. Pipe:

All pipe, including flanged pipe, for sizes up to and including 12-in. shall have a wall thickness equal to Special Thickness Class 56 as specified in AWWA C151.

C. Fittings:

Fittings shall be ductile iron and shall be in accordance with AWWA C110. Any other fittings, not included in AWWA C110, shall conform in design and performance to the requirements of this Standard.

Blind, filler, companion and reducing flanges shall conform to ANSI/ASME B16.1.

Where compact fittings are shown or indicated, items shall be in accordance with AWWA C153.

D. Flanged Joints:

Threaded Flanges: Shall be solid, threaded, ductile-iron, flanges meeting the requirements of AWWA C115. Threaded flanges and pipe shall be assembled and faced by the pipe manufacturer; field or shop assembly will not be accepted. Threaded flanges shall be screwed on tight without overstressing the threads and, when properly assembled, shall be concentric with the pipe.

The dimensions of all flanges for pipe fittings and specials and the number and sizes of bolts, up to and including 54-in., shall be in accordance with ANSI B16.1, Class 125 standard flanges.

Flanges shall be tapped where tap or stud bolts are required.

Bolts: Bolts shall be in accordance with Appendix A of AWWA C115 and as follows: Flanged joints shall be made with bolts or stud-bolts with a nut on each end. Bolts, stud-bolts and nuts shall be ANSI heavy dimension, semi-finish, with square heads and cold-punched hexagonal nuts. For bolts 1¾-in. in diameter and larger, stud-bolts shall be used. Bolt size shall be American Standard for ANSI Class 125 flanges. Where flanged joints are in manholes or submerged in tanks, bolts, stud-bolts, and nuts shall be silicon bronze, ASTM B98, Alloy A, of dimensions and sizes equal to steel bolts, stud-bolts, and nuts specified in Appendix A of AWWA C115.

Gaskets: Flange gaskets shall be in accordance with Appendix A of AWWA C115. They shall be full-face gaskets for flanged joints on 12-in. diameter and smaller pipe and shall be of the ring type for flanged joints on larger pipe.

After each flanged joint has been made, all bolt heads and nuts, and all surfaces of the flanges not to be painted shall be given two coats of asphaltic coating meeting the requirements of AWWA C151.

E. Expansion Joints:

Heavy Duty Rubber Expansion Joints shall be installed where shown on the Contract Drawings.

Each Expansion Joint shall be installed with minimum of two control rods and compression sleeves, and as shown on the Contract Drawings.

F. Sleeves:

Sleeves shall be in accordance with AWWA C110. They shall be of ductile iron and shall be provided at all points where pipes will pass through walls and floors and where wall or floor castings are not provided. Unless otherwise shown, sleeves shall have intermediate collars not less than ½-in. thick and 1½ to 2-in. high located at the center of the wall.

For exterior walls of structures, wall sleeves shall be plain ends and of flush wall design.

Where shown on the Contract Drawings, modular wall seals shall be installed in the annular space between the pipe and the sleeve. In all other locations, caulk shall be installed in the annular

space between the pipe and the sleeve. Caulking materials shall be in accordance with N.Y. Spec 24-C-38. For flanged pipe, sleeves shall be fabricated large enough to accommodate flanges.

G. Cleanouts:

Cleanouts shall be furnished and installed where shown or specified.

Size: For pipe 6-in. in diameter or smaller, they shall be of the same diameter as the pipe.

Cleanout Covers: Cleanout covers which are blind flanges shall be in accordance with AWWA C110, except where conformation is required with the inside curvature of the pipe, in which case the covers shall be flanged plugs of proper shape with American Standard flange drilling.

Covers shall be fastened by means of steel studs and bronze nuts and shall be drilled and tapped for a 1½-in. diameter pipe connection.

Flange plugs shall be equipped with a dowel or other suitable means to provide proper setting.

1.13 Fabrication / Assembling / Finishes

A. Coatings and Linings:

General:

a. Ductile iron process pipe shall be lined and coated in accordance with the piping schedule(s) included in the following Section(s):

1) Section 40 06 20 – Process Pipe and Valve Schedule

b. All bolts, nuts, couplings and the like shall be coated after the joint has been made.

c. Painting shall be in accordance with General Specification 09 91 00, Painting.

d. Pipe and fittings that are to be encased in concrete shall not be painted.

Cement Lining:

e. All ductile-iron pipe and fittings shall be furnished with a cement-mortar lining not less than twice the standard thickness and seal coating meeting the requirements of AWWA C104.

Exterior Primer:

f. Pipe and fittings shall be shop coated on the outside in accordance with Section 09 91 00, Painting, for use in exposed locations, such as inside buildings where finish painting or insulating is required.

Painting:

g. Pipe and fittings shall be painted in accordance with the requirements of Section 09 91 00, Painting.

Concrete Encased Pipe:

h. Pipe and fittings which are to be encased in concrete where water-tightness is to be obtained shall not be coated or painted on the outside.

Labels:

i. In addition to the information required to be cast onto the pipe by AWWA C151, the letters "N.Y.C." shall be painted on the outside of each pipe, fitting, and special casting.

Pipe Couplings:

j. Where flexible or rigid couplings are to be used, the exterior coating on the ends of pipe and fittings shall be left off for approximately 8-in., but the interiors shall be lined throughout.

1.14 Source Quality Control / Shop Tests

A. Not Used

EXECUTION

1.15 Examination / Preparation

A. Damaged pipe will be rejected and shall be replaced at the Contractor's expense.

1.16 Installation

A. Install ductile iron process pipe, fittings, and specials in accordance with the requirements of the following Section(s):

Section 40 05 05, Exposed Piping Installation.

1.17 Field Testing / Quality Control

A. Perform field testing and quality control of ductile iron process pipe, fittings, and specials in accordance with the requirements of the following Section(s):

Section 40 05 05, Exposed Piping Installation.

1.18 Startup / Demonstration

A. Not Used

1.19 Adjusting / Protection / Cleanup

A. Not Used

END OF SECTION

40 05 22 STEEL AND STAINLESS STEEL PROCESS PIPE

GENERAL

1.01 Summary

A. The Contractor shall provide all labor, materials, equipment, incidentals, and appurtenances as shown, specified, and required to furnish, install, and test all steel and stainless steel process pipe complete and operational.

B. Schedules:

Refer to Section 40 06 20 for additional information on the piping that is to be constructed using the pipe materials and methods specified herein

1.02 Payment

A. There is no separate payment provision for this Section.

1.03 Related Sections

A. Section 09 91 00 – Painting.

B. Section 33 05 05 – Buried Piping Installation.

C. Section 40 05 05 – Exposed Piping Installation.

D. Section 40 05 06 – Couplings, Adapters, and Specials for Process Piping.

E. Section 40 05 07 – Hangers and Supports for Process Piping.

1.04 References

A. Reference Standards:

ANSI B16.9	Standard for Factory Made Wrought Steel Butt Welding Fittings.
ASTM A53	Pipe, Steel, Black and Hot-Dipped, Zinc-Coated Welded and Seamless.
ASTM A105/A105M	Forgings, Carbon Steel, for Piping Components.
ASTM A126	Gray Iron Castings for Valves, Flanges and Pipe Fittings.
ASTM A139	Electric-Fusion (ARC)-Welded Steel Pipe (NPS4 and Over).
ASTM A193/A193M	Alloy-Steel and Stainless Steel Bolting Materials for High-Temperature Service.
ASTM A197	Cupola Malleable Iron.
ASTM A240	Heat-Resisting Chromium and Chromium Nickel Stainless Steel plate, Sheet and Strip for Pressure Vessels.

ASTM A269	Seamless and Welded Austenitic Stainless Steel Tubing for General Service.
ASTM A276	Stainless and Heat-Resisting Steel Bars and Shapes.
ASTM A283/A283M	Low and Intermediate Tensile Strength Carbon Steel Plates, Shapes and Bars.
ASTM A307	Carbon Steel Bolts and Studs, 50,000 psi Tensile.
ASTM A312/A312M	Seamless and Welded Austenitic Stainless Steel Pipes.
ASTM A380	Practice for Cleaning and Descaling Stainless Steel Parts, Equipment and Systems.
ASTM A403/A403M	Wrought Austenitic Stainless Steel Piping Fittings.
ASTM A530	General Requirements for Specialized Carbon and Alloy Steel Pipe.
ASTM A774	As-Welded Wrought Austenitic Stainless Steel Fittings for General Corrosive Service at Low and Moderate Temperatures.
ASTM A778	Welded, Unannealed Austenitic Stainless Tubular Products.
ASTM B98	Copper Silicon Alloy Rod, Bar, and Shapes.
ASTM F491	Specification for Poly (Vinylidene Fluoride) (PVDF) Plastic-Lined Ferrous Metal Pipe and Fittings.
ASTM F492	Specification for Propylene and Polypropylene (PP) Plastic-Lined Ferrous Metal Pipe and Fittings.
ASTM F599	Specification for Poly (Vinylidene Chloride) (PVDC) Plastic-Lined Ferrous Metal Pipe and Fittings.
ASME B1.1	Unified Inch Screw Threads (UN and UNR Thread Form).
ASME B16.1	Cast Iron Flanges and Flanged Fittings, Class 25, 125, 250, 800.
ASME B16.3	Malleable-Iron Screwed Fittings, 125 and 250 lb.
ASME B16.4	Cast Iron Threaded Fittings.
ASME B16.5	Pipe Flanges and Flanged Fittings, with Appendices.
ASME B16.9	Wrought-Steel Butt Welding Fittings.
ASME B16.11	Forged Steel Fittings, Socket-Welding and Threaded.
ASME B16.21	Non-Metallic Gaskets for Pipe Flanges.

ASME B18.2.1	Square and Hex Bolts and Screws.
ASME B31.1	Power Piping.
ASME B36.19M	Stainless Steel Pipe.
AWWA C200	Steel Water Pipe 6-in. and Larger.
AWWA C203	Coal-Tar Protective Coatings and Linings for Steel Water Pipelines Enamel and Tape Hot-Applied.
AWWA C205	Cement-Mortar Protective Lining and Coating for Steel Water Pipe 4-in. and Larger Shop Applied.
AWWA C207	Steel Pipe Flanges for Waterworks Service Size 4-in. Through 144-in.
AWWA C210	Liquid Epoxy Coating Systems for Interior and Exterior of Steel Water Pipelines.
AWWA C214	Tape Coating Systems for the Exterior of Steel Water Pipelines.
AWWA M11	Steel Pipe A Guide for Design and Installation.
NSF 61	Drinking Water System Components Health Effects.
New York City Building Code	

1.05 Description

A. This Section includes requirements for providing steel and stainless steel process pipe and accessories in accordance with applicable standards and regulations. In addition:

The scope of this Section shall include all steel and stainless steel process pipe, fittings, and specials.

The extent of steel and stainless steel process piping is shown on the Contract Drawings. Steel and stainless steel process pipe Schedules are provided in Section 40 06 20.

Steel and stainless steel process pipe, fittings, appurtenances, and specials shall be furnished and installed complete with all necessary jointing materials, wall castings, wall sleeves, specials, adapters, and other appurtenances as shown on the Contract Drawings, as specified herein, and/or as necessary and required for a complete installation.

a. Couplings for steel and stainless steel process pipe shall be provided as specified in Section 40 05 06, Couplings, Adapters, and Specials for Process piping.

b. Hangers and support for steel and stainless steel process pipe shall be provided as specified in Section 40 05 07, Hangers and Supports for Process Piping.

Where shown on the Contract Drawings, the Contractor shall provide all labor and materials for making connections between steel and stainless steel process pipe and existing lines(s) installed

under other contracts, including all specials required to connect steel and stainless steel process pipe to pipe of dissimilar material(s).

The scope of this Section shall include all painting, coating, lining, gaskets, harnesses, bolts, nuts, and other appurtenances and material required to provide and assemble the lines.

1.06 Quality Assurance

A. Qualifications of Manufacturer:

The manufacturer shall have a minimum of five (5) years of experience in the design and fabrication of steel and stainless steel process pipe, fittings, appurtenances, and specials of similar size, capacity, and type to those shown on the Contract Drawings and specified in the Contract Documents, and shall show evidence of at least five (5) substantially similar installations in satisfactory operation.

Linings and coatings:

a. Lining and coating manufacturer shall have a minimum of five (5) years of experience in protecting pipelines exposed to the service conditions specified in the Contract documents, and shall show evidence of at least five (5) substantially similar installations in satisfactory operation.

Qualifications of Welder:

b. Certified welders, having current certificates conforming to the requirements of the ASME code, shall be utilized to perform all welding on steel pipes. Welders shall be qualified under the requirements of Section IX Welding Qualifications of the ASME Boiler and Pressure Vessel Code.

B. Supply and Compatibility:

All steel and stainless steel process pipe, fittings, appurtenances, and specials included in this Section shall be provided by the Contractor through a single, qualified steel and stainless steel process pipe manufacturer

The pipe and fittings shall be designed, fabricated, and installed in accordance with the standards referenced herein.

The manufacturer shall bear responsibility for the quality of all factory-applied linings and coatings, regardless of the location of application.

The manufacturer shall verify compatibility between the steel and stainless steel process pipe, fittings, appurtenances, specials, and other Work.

Inscription:

a. The following shall all be shall be rolled or permanently inscribed on each and every pipe surface:

1) manufacturer's name or trademark,

2) the year of manufacture and

3) the ASTM or API specification number.

b. As an alternate to rolling or permanent inscription, the information required herein may be stencilined on each and every pipe surface.

c. Pipe 1½ in. and less in nominal diameter shall be bundled and tagged.

Foreign products and materials:

d. Steel and stainless steel pipe and fittings manufactured outside of the continental United States shall meet all the requirements of the latest ASTM standards referred to hereinbefore and, unless waived in writing by the Engineer, shall undergo physical tests and chemical analyses to prove compliance therewith.

1) Such tests and analyses shall be performed by an independent testing laboratory approved by the Engineer.

2) The test samples shall be selected and tested in conformance with ASTM requirements.

3) The Engineer may at their discretion visit the test facility and witness the tests.

4) The cost of all physical tests and chemical analyses shall be borne by the Contractor.

C. Regulatory Requirements:

Steel and stainless steel process pipe shall conform to the applicable provisions of the Code for Pressure Piping, ASME B31.1 and its Supplements and specifically to Chapters 2, 4, and 5 of Section 6 - Fabrication Details except for plumbing and low pressure (15 psig maximum) heating lines.

Steel and stainless steel process pipe and fittings shall conform to the New York City Building Code in respect to plumbing and other applications covered by these codes.

Use only NSF61-approved materials in potable water lines.

1.07 Submittals

A. Submittals for all steel and stainless steel process pipe shall comply with the requirements of Section 33 05 05, Buried Piping Installation, and Section 40 05 05, Exposed Piping Installation.

1.08 Delivery, Storage, and Handling

A. The Contractor shall deliver materials provided under this Section in accordance with the requirements of the Contract Documents. In addition:

Pipes shall be loaded on properly padded saddles not less than 6-in. in width so that they do not bear against each other.

The whole load shall be securely fastened together as well as to any vehicle to prevent movement in transit.

B. The Contractor shall store and handle materials provided under this Section in accordance with the requirements of the Contract Documents. In addition:

Special care in handling shall be exercised during delivery, storage and handling of pipe to avoid damage and setting up stresses. Pipe and specials stored prior to use shall be stored in such a manner as to keep the interior free from dirt and foreign matter.

When required for maintaining its circular shape and preventing distortion, each length of pipe shall be temporarily braced with an approved type of internal spider in each end of the pipe during erection.

Handling Coated Pipe:

a. Coated pipe shall be protected at all times and handled with equipment designed to prevent damage to the coating, such as stout wide canvas slings and wide padded skids.

1) The use of bare chains, cables, hooks, metal bars or narrow skids in contact with the coating will not be permitted.

b. All pipe handling and hauling equipment shall meet the approval of the Engineer before use.

1.09 Spare Parts, Special Tools, and Supplies

A. Not Used

1.10 Special Warranty Provisions / Guarantee Periods

A. Not Used

PRODUCTS

1.11 Manufacturers

A. Not Used

1.12 Materials / Equipment

A. Steel Pipe:

Wall thicknesses for steel pipe shall be in accordance with ASME B36.10M and as specified in Table 40 05 22-1:

TABLE 40 05 22-1

WALL THICKNESS FOR STEEL PIPE

Nominal Pipe Diameter: (in.)	**Schedule/ Thickness:**	**Shall comply with the following additional standards:**
≤ 12	Sch. 40	ASTM A53
14 - 24	⅜ in.	ASTM A53
30	⅜ in.	ASTM A139
≥ 36	½ in.	ASTM A139

Steel pipe 30-in. in diameter and larger may be in accordance with the requirements of AWWA C200 and fabricated of plates meeting the requirements of ASTM A283/A283M Grade D, fusion welded in accordance with the Code for Pressure Piping, ASME B31.1, so as to develop full plate strength. Such fabricated steel pipe shall be shop tested as specified for fabricated fittings.

a. Pipe shall be fabricated with straight-seam welds or spiral-seam welds.

b. Welds shall be provided with a smooth uniform cross section to provide pipe with a neat external appearance.

c. Pipe shall be fabricated with not more than two longitudinal seams and with girth seams not less than 7 ft apart.

d. The pipe and fitting diameters of 30-in. and larger, as shown or specified, are inside diameters.

Carbon steel pipe, including fabricated pipe shall be provided in lengths of approximately 20 ft unless otherwise specified.

B. Steel Fittings:

General:

a. Fittings shall be manufactured to standard dimensions, suitable for the pressures specified.

b. Fittings shall be provided of the same or heavier wall thickness as the pipe of which they are a part.

c. Strength, physical and chemical requirements, shall meet or exceed the requirements specified for the pipe.

Fittings used in pipelines 2-in. diameter or smaller shall be of the screwed pattern, except as shown or specified otherwise.

Fittings used in pipelines 2½-in. diameter or larger shall be of the seamless steel welded type or flanged type, except as shown or specified otherwise.

Unions:

d. Screwed unions shall be used on all steel pipelines 2-in. diameter and smaller.

e. An adequate number of unions of the screwed or flanged type shall be provided in each main pipe and each branch to facilitate the dismantling or removal of any branch line or any part thereof or the section of the main pipe to which it connects, without disturbing adjacent branch lines or their related main pipeline.

f. Where sleeve-type (harnessed) groove-type or shouldered-end flexible pipe couplings, are specified, they may be considered as substitutes for pipe unions.

Screwed Fittings:

g. Screwed fittings 2-in. and smaller shall be malleable iron flat band fittings, ASME B16.3, 125 lbs. For high pressure service, conform to

ASME B16.3, 250 lbs. Malleable iron shall conform to the requirements of ASTM A197.

h. Where shown or specified, screwed end fittings of cast iron, conforming to the requirements of ASME B16.4, 125-lb. standards for general service and 250-lb. for high pressure service shall be provided. Cast iron shall meet the requirements of ASTM A126.

i. All threads shall be clean cut and smooth conforming to the American Standard for Pipe Threads, ASME B1.1. Fittings shall be with right and/or left hand threads as required.

j. Unions and railroad unions and union elbows and tees shall be malleable iron fitted with brass to iron seats unless otherwise specified.

Flanged Fittings:

k. Where shown on the Contract Drawings or where specified, cast iron or steel flanged fittings shall be provided.

l. Cast iron flanged fittings for general service shall conform to the requirements of ASME B16.1.

m. Steel flanged fittings shall utilize forged steel slip-on flanges. Fittings shall be Class 125 and Class 250 fittings conforming to the requirements of ASME B16.5, 150 lb. or 300 lb., respectively, as specified, except flanges that are plain faced shall be provided. Provide Class 125 fittings conforming to AWWA C207, Class B.

n. Cast steel flanged fittings shall be assembled with forged steel flanges of the same pressure rating, conforming to the requirements of ASME B16.5.

C. Fabricated Steel Fittings:

Fittings shall be shop fabricated from a segmental welded steel section of a plate thickness not less than that specified for pipe connected thereto. The minimum radii of the centerlines of the bends shall be 1.5 times the nominal pipe diameter unless otherwise specifically shown on the Contract Drawings. The included angle between the points of tangency of the bend and connecting straight pipe shall contain not less than the number of bend segments called for in Table 40 05 22-2:

TABLE 40 05 22-2

MINIMUM NUMBER OF EGMENTS FOR FABRICATED STEEL FITTINGS

Bend Angle:	**Minimum No. of Full Segments:**	**Minimum No. of Part Segments:**
75° - 90°	4	2

Bend Angle:	Minimum No. of Full Segments:	Minimum No. of Part Segments:
60° - 74°	3	2
45° - 59°	2	2
30° - 44°	1	2
0° - 29°	0	2

a. In Table 40 05 22-2:

1) Full segments shall consist of sections with ends cut to form included angles of 15°.

2) Part segments shall consist of sections up to 7½°.

3) Depending on the angle, additional full segments may be required beyond the minimum number specified in Table 40 05 22-2 to make the bend angle.

b. The following examples are offered demonstrating conformance to table 40 05 22-2:

1) A 90° bend would require four (4) 15° full segments, two (2) 7½° segments at the ends of the fitting, plus one (1) additional 15° segment to make 90°. The additional 15° (full) segment is required to make an angle of 90°.

2) A 45° bend would require two (1) 15° segments and two (2) 7½° segments.

Fittings for cement-lined pipelines shall be lined after fabrication of the fittings.

Cement-lined fabricated fittings shall be installed with flexible pipe couplings. Such fittings shall be provided with extra-long end segments extending past the point of tangency of the radius to the segment centerline to accommodate the couplings.

Fabricated fittings installed with couplings shall be provided with extra-long end pieces to suit the coupling. Sleeve-type or shouldered-end couplings provided shall meet the requirements of Section 40 05 06, Couplings, Adapters, and Specials for Process Piping. Collared end pieces shall be provided for shouldered-end couplings.

Reducers and increasers shall be provided with the same laying length as American Standard Class 125.

Fabricated steel fittings shall be provided with plain ends or welded flanges.

Tees, wyes, laterals and outlets shall be reinforced in accordance with AWWA Manual M11.

D. Couplings:

Where shown on the Contract Drawings, specified, or required for the convenience of installation, pipe couplings conforming to the requirements of Section 40 05 06, Couplings, Adapters, and Specials for Process Piping, shall be furnished and installed.

Harnessed sleeve-type couplings shall be used close to the connecting point for pipe connections to pumps and other equipment handling fluids or gases under 200°F susceptible to damage or binding due to pipe strain unless other types of flexible connections are shown or specified.

Cement-lined fabricated fittings shall be assembled with flexible pipe couplings. Where butt welding fittings are approved for assembly in cement lined pipes, fittings shall be provided with spool pieces welded on each end and, assembled with flexible pipe couplings after cement lining. Where harnessed joints are required on lined pipe, the harnessing lugs shall be welded before lining.

Where pipelines pass from a concrete structure into earth, flexible couplings shall be installed at the face of the structure and at a point about four feet from the structure to protect the pipe against damage by displacement or settling.

E. Expansion Joints:

Where shown on the Contract Drawings, specified, or required, the Contractor shall provide internally guided, packed sleeve type expansion joints, in which the traverse slip section functions correctly without leakage at the maximum estimated expanded position at full operating pressure.

Unless specified otherwise, on pipes 3-in. nominal diameter and smaller, expansion joints with screwed ends, of all bronze or brass construction shall be provided.

On pipelines 4-in. and larger, expansion joints with ANSI Class 125 flanged ends, cast semi-steel bodies and brass sleeves shall be provided.

Ample space shall be provided for packing, with packing material suitable for the service and pressure specified. Where specified or shown, integrally cast anchor bases suitable for anchor bolting shall be provided.

Expansion joints shall be installed so that the traverse can move only in a direction parallel to its center line in conformity with the requirements of the Code for Pressure Piping, ASME B31.1, Paragraph 612.

F. Wall Sleeves:

Suitable ductile iron or steel pipe sleeves shall be provided at all points where pipes pass through the walls or floors of structures, and where wall castings are not provided.

a. Ductile iron sleeves shall be provided as specified in Section 40 05 19, Ductile Iron Process Pipe.

Steel sleeves smaller than 12-in. in diameter shall be provided not less than Schedule 40. Steel sleeves shall be provided with an intermediate collar located at the center of the wall. The O.D. of the collar shall be four inches greater than the O.D. of the sleeve, fabricated from steel plate with a minimum thickness equal to the sleeve thickness and double welded to the sleeve.

Modular mechanical-type seals consisting of interlocking synthetic rubber links shaped to continuously fill the annular space between the pipe and the wall sleeve shall be provided. The elastomeric element shall be of the size, quantity, type and material that the manufacturer recommends for the intended service and that will provide an effective hydrostatic seal.

G. Cleanouts:

Where shown on the Contract Drawings or specified, flanged cleanouts shall be provided as specified in Section 40 05 19, Ductile Iron Process Pipe.

H. Stainless Steel Pipe

General:

a. Low pressure air service pipe is limited to air lines with a maximum working pressure of 15.0 psig.

b. For air piping nominal pipe sizes 3-in. and above shall be fabricated in accordance with ASTM A778 from Type 316L stainless steel.

c. The pipe shall be subjected to hydrostatic and flattening tests as specified in ASTM A530.

d. All welds shall be free from burrs, snags or rough projections.

Wall Thickness:

e. Wall thicknesses for stainless steel pipe for low pressure service shall be as specified in Table 40 05 22-3, unless a greater wall thickness is specified in the following piping schedule:

1) Section 40 06 01, Schedule for Exposed Piping.

TABLE 40 05 22-1

WALL THICKNESS FOR STAINLESS STEEL PIPE

Nominal Pipe Diameter: (in.)	**Schedule/ Thickness:**	**Shall comply with the following additional standards:**
≤ 18	Sch. 10S	ANSI B36.19
20 - 36	$^{3}/_{16}$-in.	N/A
42 - 48	¼-in.	N/A
54 - 60	$^{5}/_{16}$-in.	N/A
66 - 72	⅜-in.	N/A
78 - 96	½-in.	N/A

Joints:

f. Joints shall be butt weld or flanged only – pipe couplings for joining plain end, grooved end, and shouldered end pipe and fittings are not acceptable.

g. No welding in the field shall be permitted.

Fittings:

h. General:

1) Fittings shall be manufactured to standard dimensions and suitable for the pressures specified.

2) Fittings shall be provided of the same or heavier wall thickness as the pipe of which they are a part.

3) Strength, physical and chemical requirements, shall meet or exceed the requirements specified for the pipe.

4) Fittings shall be subject to the same hydrostatic test as the pipe.

i. Materials and Construction:

1) Fittings shall be fabricated from Type 316L stainless steel in conformance with ASTM A774 of the same wall thickness as specified for the pipe.

2) Fittings shall conform to the dimensional requirements of ANSI B16.9, Standard for Factory Made Wrought Steel Butt Welding Fittings.

a) Elbows shall be long radius.

j. Flanged Ends:

1) Where shown on the Contract Drawings or where specified, stainless steel flanged fittings shall be provided.

2) Flanged pipe ends shall be made up of 316L stainless steel slip-on type rolled angle face rings and 316 stainless steel back-up flanges drilled to ANSI 16.1 class 125 standard.

3) The angle face ring thickness shall be equal to or greater than the wall of the pipe or fitting to which it is welded and it shall be continuously welded on both sides to the pipe or fitting.

4) Van stone style flanges are not acceptable for low pressure air service.

5) The angle leg shall not interfere with the flange bolt holes.

6) The backup flanges shall be supplied per ASTM A240 with thicknesses specified in Table 40 05 22-4.

TABLE 40 05 22-2

BACKUP FLANGE THICKNESS FOR STAINLESS STEEL PIPE FOR LOW PRESSURE SERVICE

Nominal Pipe Diameter: (in.)	Flange Thickness (in.)
2½ - 3	½
4	9/16
6 - 10	⅝
12 - 16	¾
18 - 20	⅞
24 - 30	1
36	1⅛
42	1¼
48	1⅜
54	1⅜
60	1½
66	1⅝
72	1⅝
84	1¾
96	2

k. Gaskets shall be rated for 250°F service.

All stainless steel pipe and fittings shall be pre-cleaned, pickled and passivated after fabrication in accordance with the applicable sections of ASTM A380, except where otherwise specified.

I. Heavy Wall Stainless Steel Pipe and Fittings:

Heavy wall stainless steel pipe and fittings shall be Type 316L stainless steel fabricated in accordance with ASTM A312/312M for nominal pipe sizes up to 12-in.

Wall thickness shall be Schedules 40S or 80S pipe in accordance with ANSI B36.19 and as indicated on the piping schedule in the Contract Documents.

Flanges:

a. Where flanges are shown, specified or required for connection of stainless steel pipe and fittings to pipe equipment, forged stainless steel slip-on flanges conforming to ANSI 150 pound or 300 pound standards, shall be provided as specified, welded at the hub and at the face.

b. Flanges, flanged fittings and flanged joints shall conform to the applicable provisions specified herein for steel flanges, flanged fittings

and flanged joints, except that steel bolting shall be cadmium plated to produce a uniform appearance.

Fittings:

c. For nominal pipe sizes 2-in. and smaller: fittings shall be of the socket-welding type conforming to the dimensional requirements of ASME B16.11.

d. For nominal pipe sizes 2½-in. and larger: fittings shall be the butt-welding type conforming to the dimensional requirements of ASME B16.9.

e. Fittings shall conform to the materials and alloy requirements of ASTM A403/A403M.

All stainless steel pipe and fittings shall be pre-cleaned, pickled and passivated after fabrication in accordance with the applicable sections of ASTM A380, except where otherwise specified.

J. Stainless Steel Tubing and Fittings:

Tubing and fittings shall be of Type 316L stainless steel.

Tubing shall be seamless.

Tubing shall be in accordance with ASTM A269 for nominal tubing diameters less than 1½-in.

Wall Thickness and Service:

a. Tubing shall be as specified in Table 40 05 22-5:

TABLE 40 05 22-5

WALL THICKNESS AND PRESSURE RATING FOR STAINLESS STEEL TUBING AND FITTINGS

Nominal Tubing Diameter: (in.)	**Wall Thickness: (in.)**	**Pressure Rating: (psi)**
¼	0.035	3,000
⅜	0.035	2,500
½	0.049	2,500
⅝	0.049	2,500
¾	0.065	2,500
1	0.065	2,000

b. Provide Type 316 stainless steel, flareless tube fittings in conformance with ASTM A276.

c. Provide dielectric insulating joints or fittings at connections between exterior piping and interior piping.

d. All stainless steel tubing shall be pre-cleaned, pickled, and passivated after fabrication in accordance with the applicable sections of ASTM A380, except where otherwise specified.

K. High Pressure Stainless Steel Pipe

All piping shall be provided by the same contractor.

The piping shall have a minimum safety factor of 6 based on the operating pressure to burst

Stainless Steel Pipe shall be designed for a maximum test pressure (1.5 times operating pressure) at the maximum design temperature of the process medium.

Piping components, fittings, and tubing shall be type 316 Stainless Steel tube connections and SAE O-Ring port connections, butt welded or socket welded.

Contractor to provide appropriate connection joints and or fittings to connect the distribution supply and return piping to the hydraulic junction panels.

Field pipe size and schedule to be determined by HPU manufacturer in accordance with ANSI/ASME B31.1 – Field Power Piping, and furnished and installed by the Contractor. Contractor is responsible for flushing the field installed tubing.

1.13 Fabrication / Assembling / Finishes

A. Coatings and Linings:

General:

a. Stainless steel process pipe shall be lined and coated in accordance with the piping schedule(s) included in the following Section(s):

1) Section 40 06 20, Piping and Valve Schedule

b. All bolts, nuts, couplings and the like shall be coated after the joint has been made.

c. Painting shall be in accordance with Section 09 91 00 - Painting.

d. Pipe and fittings that are to be encased in concrete shall not be painted.

Cement-Mortar Lining:

e. The pipe and fittings shall be lined before installation in conformity with the requirements of AWWA C205. The lining shall be shop applied. A seal of asphaltic material shall be provided in conformity with AWWA C203.

f. Fabricated pipe and fittings shall be cement lined after fabrication.

g. Cement linings for steel pipe and fittings shall conform to the thicknesses as given in AWWA C205 and Table 40 05 22-6:

TABLE 40 05 22-6

CEMENT LINING THICKNESS AND TOLERANCES

Nominal Pipe Size: (in.)	**Lining Thickness (in.)**	**Tolerance (in.)**
1¼ - 1½	$^{3}/_{32}$	$\pm^{1}/_{64}$
2 - 2½	$^{1}/_{8}$	$\pm^{1}/_{32}$
3 - 3½	$^{5}/_{32}$	$\pm^{1}/_{32}$

h. Shop and field cutting of cement lined pipe will be permitted only by methods specifically approved by the Engineer, in each case; field cutting will only be permitted if witnessed by the Engineer.

i. Caps, plugs, sleeves and valve box castings shall not be cement lined but shall receive a liquid epoxy coating as specified under Article C above.

1.14 Source Quality Control / Shop Tests

A. Not Used

EXECUTION

1.15 Examination / Preparation

A. Damaged pipe will be rejected and shall be replaced at the Contractor's expense.

1.16 Installation

A. Install steel and stainless steel process pipe, fittings, and specials in accordance with the requirements of the following Section(s):

Section 33 05 05, Buried Piping Installation.

Section 40 05 05, Exposed Piping Installation.

1.17 Field Testing / Quality Control

A. Perform field testing and quality control of ductile iron process pipe, fittings, and specials in accordance with the requirements of the following Section(s):

Section 33 05 05, Buried Piping Installation.

Section 40 05 05, Exposed Piping Installation.

1.18 Startup / Demonstration

A. Not used

1.19 Adjusting / Protection / Cleanup

A. Cleaning:

During construction, all piping shall be thoroughly cleaned before placement and the lines kept free from foreign matter of whatever origin. The pipes shall be left thoroughly clean to the satisfaction of the Engineer.

Flush all process and potable water pipelines with clean water.

END OF SECTION

40 05 56 PROCESS VALVES, SMALLER THAN FOUR-INCH DIAMETER

GENERAL

1.01 Summary

A. Contractor shall provide all labor materials, equipment and incidentals as shown, specified and required to furnish and install valves complete with appurtenances and operational. All shall be furnished under this Section unless specifically indicated in this section and shown on the Contract Drawings.

1.02 Payment

A. There is no separate payment provision for this Section.

1.03 Related Sections

A. Section 40 05 06 – Couplings, Adapters, and Specials for Process Piping

B. Section 40 05 07 – Hangers and Supports for Process Piping

C. Section 40 05 19 – Ductile Iron Process Pipe

D. Section 40 05 22 – Steel and Stainless Steel Process Piping

E. Section 40 05 97 - Identification for Process Equipment

1.04 References

A. American National Standards Institute (ANSI):

B16.1 Gray Iron Pipe Flanges and Flanged Fittings: Classes 25, 125, and 250

B. American Society for Testing and Materials (ASTM):

A126 Standard Specification for Gray Iron Castings for Valves, Flanges and Pipe Fittings

A193 Standard Specification for Alloy-Steel and Stainless Steel Bolting Materials for High Temperature or High Pressure Service and Other Special Purpose Applications

A307 Standard Specification for Carbon Steel Bolts, Studs, and Threaded Rod 60,000 PSI Tensile Strength

A536 Standard Specification for Ductile Iron Castings.

C. American Water Works Association (AWWA):

C500 Metal-Seated Gate Valves for Water Supply Service

C508 Swing-Check Valves for Waterworks Service, 2 in. through 24 in.

C509 Resilient-Seated Gate Valves for Water Supply Service

C542 Electric Motor Actuators for Valves and Slide Gates

D. Military Specification:

MIL-C-27487 Coupling Halves, Quick-Disconnect, Cam-Locking Type.

E. National Electrical Manufacturers Association (NEMA):

1. Enclosure Type 4X

1.05 Description

A. All valves shall turn clockwise to close, unless otherwise specified.

B. All valves shall have permanent markings for direction to open.

C. All valve body castings shall be clean, sound, and without defects of any kind. No plugging, welding, or repairing of defects will be allowed

D. All materials of construction of the valves shall be confirmed suitable for the application by the valve manufacturer.

E. All valves shall have manufacturer's name and rated pressure cast in raised letters on the valve body.

F. The valves shall be provided with identification conforming to the requirements of Section 40 05 97 - Identification for Process Equipment.

G. Valve operators shall be designed to unseat, open or close under the most adverse operating condition to which the gates will be subjected.

H. The valve operators and electric actuators shall be the full and undivided responsibility of the valve manufacturer in order to ensure complete coordination of the components and to provide unit responsibility.

1.06 Quality Assurance

A. Manufacturer's Qualifications:

Manufacturer shall have a minimum of 5 years of experience in the production of substantially similar valve equipment, and shall show evidence of satisfactory service in at least 5 installations.

Each type of valve shall be the product of one manufacturer.

1.07 Submittals

A. Contractor shall submit Shop Drawings for approval of the Engineer. Submittals shall include, but not be limited to:

Product data sheets for make and model.

Complete catalog information, descriptive literature, specifications, and identification of materials of construction.

Power and control wiring diagrams, including terminals and numbers.

Manufacturer's qualifications.

Confirmation of suitability of the valve materials for the application.

Complete motor nameplate data.

Certificates of compliance with AWWA Standards where applicable.

Spare Parts List.

Special Tools List.

Valve manufacturer(s) certified test results of shop testing specified in this section shall be submitted for all valves.

B. Operation and Maintenance Data: Submit complete manuals including:

Copies of all Shop Drawings, test reports, maintenance data and schedules, description of operation, and spare parts information.

1.08 Delivery, Storage, and Handling

A. Protection of materials and equipment shall be as required herein.

B. Valves and appurtenances shall be handled carefully. Valves which are dropped, dented, cracked or otherwise damaged will not be acceptable.

1.09 Spare Parts, Special Tools, and Supplies

A. The Contractor shall furnish and deliver to the Engineer, at that part of the site and at such time as the Engineer may direct, spare parts listed in the table in Section 40 61 22 , Article 1.09, E.

B. The following quantities of spare valves shall be furnished for each type and size of valve installed.

Number of Valves Installed	**Sets of Spare Valves Required**
1-5	1
6-10	2
11-15	3
16-30	5
Greater than 30	add 1 for every 10 additional valves greater than 30

1.10 Special Warranty Provisions / Guarantee Periods

A. Not Used

PRODUCTS

1.11 Manufacturers

A. The products shall be:

Solenoid Valves as manufactured by:

a. Automatic Switch Company, Florham Park, NJ;

b. Automatic Valve Corporation, Novi, MI;

c. Or approved equal.

Ball Valves as manufactured by:

d. Stockham Valves and Fitting Company, Cullman, AL;

e. CVC Valves, former Lunkenheimer Company, Cincinnati, OH;

f. Or approved equal.

Check Valves as manufactured by:

g. Stockham Valves and Fitting Company, Cullman, AL;

h. CVC Valves, former Lunkenheimer Company, Cincinnati, OH;

i. Or approved equal.

Gate Valves as manufactured by:

j. Stockham Valves and Fitting Company, Cullman, AL;

k. CVC Valves, former Lunkenheimer Company Cincinnati, OH;

l. Or approved equal.

Globe Valves as manufactured by:

m. Apollo, Eppler Company, Ponte Vedra, FL;

n. Or approved equal

Air Release Valves as manufactured by:

o. Cla-Val Company, Milford, CT;

p. Watts Water Technologies, Inc., North Andover, MA;

q. Or approved equal.

Hose Bibs as manufactured by:

r. Crane Co., Stamford, CT;

s. Powell Valves, Cincinnati, OH;

t. Or approved equal.

Quick Connect Couplings - Water Service as manufactured by:

u. Civacon, Kansas City, Missouri;

v. Kamlok, Lebanon, Ohio;

w. Blackmer, A Dover Resources Company, Grand Rapids, MI;

x. PT Coupling Company, Enid, OK;

y. Or approved equal.

Electric Motor Actuators as manufactured by:

z. Limitorque, Lynchburg, VA;

aa. Rotork Controls Inc., Rochester, NY;

bb. EIM, Missouri City, TX;

cc. AUMA Actuators, Canonsburg, PA;

dd. Or approved equal.

Hydraulic Tubing as manufactured by:

ee. Parker, Columbus, OH

ff. Or approved equal.

1.12 Materials / Equipment

A. Valves:

Ductile iron valves shall conform to ASTM A126, Class A.

Type 316 stainless steel bolts and studs shall conform to ASTM A193, Grade B.

Carbon steel bolts shall conform to ASTM A307, Grade A.

1.13 Fabrication / Assembling / Finishes

A. Valves for Metallic Pipe Lines

Solenoid Valves:

a. Type: Packless construction with screwed end connections and threaded conduit connection.

b. Materials: Bronze body and wetted parts with type 304 stainless steel hardware.

c. Coil: Continuous duty, epoxy encapsulated.

d. Failure Mode: Fail open, energize to close.

e. Electrical Power: 120 volt, 60 Hz, single phase.

f. Each solenoid valve shall be protected with a strainer upstream.

Ball Valves:

g. Body: Stainless Steel or Ductile Iron as specified herein.

h. Ball, Stem Handle and Hardware: Type 316 stainless steel.

i. Seat, Packing and Gasket: Teflon.

j. End Connections: Threaded or Socket Weld of Butt Weld as shown in the Contract Drawings..

k. Rating: 150 psig Water, Oil or Gas (W.O.G.).

Check Valves:

l. Type: Swing, re-grindable bronze disc, screw-in cap.

m. Materials: Stainless Steel or Ductile Iron as specified herein.

n. End Connections: Screwed.

o. Rating: 200 psig Steam Working Pressure (SWP).

p. Swing check valves shall conform to AWWA C508.

Gate Valves:

q. Type: Solid wedge, rising stem.

r. Body and Wetted Parts: Stainless Steel or Ductile Iron as specified herein.

s. Handle and Hardware: Type 316 stainless steel.

t. End Connections: Screwed.

u. Rating: 150 psig Water, Oil or Gas (W.O.G.).

v. The valves shall conform to AWWA C500 and as specified herein.

Globe Valves:

w. Type: 316 Stainless Steel

x. Size: ¾-inch pipe size

y. Connection Type: FNPT x FNPT

z. Handle: non-corrosive

aa. Max Fluid Presure: 10,000 psi

Air Release Valves:

bb. Type: Balanced, soft closing, single seat. Constant downstream pressure regardless of upstream pressure or flowrate. Drop tight shutoff when downstream pressure greater than spring setting.

cc. Strainer: Integral with the valve, Type 316 stainless steel.

dd. Body and Cover: Stainless Steel or Ductile Iron as specified herein.

ee. Trim: Type 316 stainless steel.

ff. End Connections: Screwed.

gg. Diaphragm: Ethylene Propylene Dienne Termopolymer (EPDM), fully guided at top and bottom.

hh. Pressures and Flows: As specified in this section.

Hydraulic Valves and Tubing:

ii. Type: 316 Stainless Steel in accordance to ANSI/ASME B 31.1 – Power Piping

jj. Include a minimum factor of safety of six (6) based on the operating pressure to burst

kk. Connections: Butt Welded or Socket Welded as described in Section 40 06 20 – Piping and Valve Schedule

Hose Bibs:

ll. Type: Chicago pattern.

mm. Materials: Ductile Iron.

nn. Operator: Tee handle.

oo. Pipe End Connection: Threaded.

pp. Hose Connection: 1-1/2-inch NPT for 1-1/2 inch hose, quick connect couplings for larger hoses.

B. Appurtenances and Miscellaneous Items

Quick Connect Couplings - Water Service:

a. Type: Dual cam and groove, male end dimensionally similar to MIL-C-27487, with dust cap, Type 304 stainless steel chain and lock.

b. Body: Ductile iron.

c. Cam Arms: Type 304 stainless steel.

d. Gaskets: Buna-N.

Electric Motor Actuators: Electric motor actuators shall conform to the requirements of AWWA C542 and shall have the following characteristics.

e. Type: Open-Close, reversing.

f. Open-Close Time for Ball Valves: 10 seconds.

g. Open-Close Time for Diaphragm Valves: 60 seconds maximum.

h. Housing: NEMA 4X with corrosion resistant epoxy coating.

i. Power: 120 volt, 60 hz, single phase.

j. SPDT switches shall be provided for remote valve position indication.

k. Space heater and thermostat shall be provided in the housing.

l. Integral thermal overload protection shall be provided with automatic reset.

m. Limit switches shall be in accordance with Section 40 05 53 - Process Valves Four-inch Diameter and Larger.

n. Torque capacity of the actuators shall be sufficient to operate the valves with the maximum pressure differential, as indicated in the Valve Schedule in Section 40 06 20 – Piping and Valve Schedule, with a safety factor of 1.5. Actuators in modulating service will be selected such that the required dynamic valve torque is no more than 60% of the electric actuator's maximum rated breakaway of torque.

o. Operating time for full limits of travel shall be not more than 2 seconds per inch diameter of the valve, +/- 50 percent through 20 inches; +/- 30 percent for valves 24 inches and larger. Operating time shall not be less than 60 seconds for all modulating valves.

1.14 Source Quality Control / Shop Tests

A. The following valves shall be tested in conformance with the requirement of AWWA Standards:

Metal-seated gate valve - C500.

Resilient-seated gate valve - C509.

Swing check valves - C508.

B. All other valves and valve sizes shall be tested in accordance with the manufacturer's standard test procedures.

C. All valves and appurtenances shall be painted in accordance with the City.

EXECUTION

1.15 Examination / Preparation

A. Not Used

1.16 Installation

A. All valves and appurtenances shall be installed in accordance with manufacturer's instructions.

B. All valves shall be installed so that operating handwheels or wrenches may be conveniently turned from operating floor without interfering with access, and shall be as approved by the Engineer.

C. All valves shall be installed plumb and level. The valves shall be free from distortion and strain caused by misaligned piping, equipment or other causes.

D. All valves shall be tested at the operating pressures at which the particular line will be used. Any leakage or "sweating" of joints shall be stopped, and all joints shall be tight. All motor operated and cylinder operated valves shall be tested for control operation as directed by the Engineer.

1.17 Field Testing / Quality Control

A. All parts and components shall be adjusted as required to provide correct operation.

B. A functional field test of each valve shall be conducted in the presence of the Engineer to demonstrate that each part and all components function together correctly.

1.18 Startup / Demonstration

A. Not Used.

1.19 Adjusting / Protection / Cleanup

A. Where required herein the Contractor shall provide the services of qualified factory-trained service technicians to check and approve the installation.

END OF SECTION

40 05 59.01 INTERCEPTOR GATES

GENERAL

1.01 Summary

B. The interceptor gate systems specified in this Section are unique, site-specific fabrications. The sole source fabricator is Walz & Krenzer, Inc. (herein referred to as the Equipment Manufacturer), 91 Willenbrock Road, Oxford, Connecticut 06478, phone: 203-267-5712. **No other manufacturer will be acceptable.** The Equipment Manufacturer shall be responsible for any claims made against the City for an infringement of patents by the use of patented articles in any one phase of construction of the work and the completion of the same, or any process connected with the work agreed to be performed under this Contract or any materials used upon said work and to save harmless and indemnify the City from all costs, expenses and damages which the City shall be obliged to pay by reason of infringement of patents used in the construction and completion of the work. The Equipment Manufacturer shall provide the equipment, materials, and services as it is specified herein. All materials used in the fabrication of the interceptor gates are to be in accordance with this Specification and as shown on shop drawings.

C. Two (2) Interceptor Gate Systems, as described herein, shall be provided by the Equipment Manufacturer for installation in the Northern Interceptor Gate Chamber and Interceptor Gate Building and Southern Interceptor Gate Chamber and Interceptor Gate Building as shown on Contract Drawings.

D. Each Interceptor Gate System shall, without restricting the generality of the following, consist of the Equipment Manufacturer supplied items as further specified herein as part of this Section:

One (1) System Control Panel

One (1) 108” diameter Interceptor Gate assembly consisting of:

a. Interceptor Gate

b. Gate frame with integral extension plate(s) for torsion tube mounting and dogging pin anchorage

c. Torsion tube

d. The gate assembly shall be coherently connected and capable of being singly supported by a new structural chamber incorporating the existing interceptor. The gate frame shall be at least two pieces and a maximum of three pieces, with alignment pins, for shipment and field assembly by Contractor to be installed around the interceptor flume.

Hydraulic cylinder

Two (2) dogging pins per gate

One (1) Bypass slide gate with hydraulic cylinder:

e. 24”x24” bypass gate for North Interceptor Gate Chamber

f. 30”x30” bypass gate for South Interceptor Gate Chamber

One (1) Hydraulic Power Unit (HPU) with supplied hydraulic oil

One (1) Accumulator Stand Assembly

One (1) Hydraulic Manifold Assembly

Three (3) Hydraulic Connection Assemblies

One (1) Portable HPU

Spare Parts and Miscellaneous Appurtenances specified herein this document.

All anchorage, brackets, guides, supports, plates, rods, couplers, embedments, and necessary hardware shall be designed, sized and supplied by the Equipment Manufacturer to secure the interceptor gate (including bypass gate) equipment to each of the interceptor gate building and chamber structures in accordance Specification Section 05 05 23.02 – Miscellaneous Metal Fastenings unless otherwise shown on the Contract Drawings or specified herein.

E. The Equipment Manufacturer shall design, build, and test a one-quarter scale proof of design model of the 108” diameter interceptor gate utilizing the northern interceptor gate configuration and as specified in Article 1.15 of this Section.

F. Interceptor gates and the gate hydraulic operating system shall be constructed of materials suitable for use in the wastewater environment to which they will be exposed and shall be constructed of the materials specified in Article 1.12. Gates and gate operating system shall meet the general design requirements set forth in Article 1.05 and the specific design and operating requirements described in this section and as shown on the Contract Drawings.

G. All gate operating system components installed below grade shall meet National Electrical Code (NEC) Class I, Group D, Division 1 hazardous locations (as specified), provide operator-related electrical equipment and appurtenances that are UL Listed or FM Approved, Inc., as applicable, and are approved for use in such areas.

H. The Equipment Manufacturer shall refer to Specification Section 40 05 59.02 - Interceptor Gate Installation and the Contract Drawings to design and verify installation of the equipment described in this section.

I. System Overview:

Each interceptor gate is designed and fabricated for the isolation of existing nominal 108” diameter interceptors. The interceptor gate will normally be in the open position and closed and dogged prior to impending flood events and then reopened after the flood event has passed.

The operation of the interceptor gate shall be achieved by a hydraulic cylinder installed in the chamber actuated by a hydraulic power unit through a series of valves in each associated interceptor gate building, located above grade.

In the closed position, each gate shall be secured by hydraulically actuated dogging pins that will be extended automatically when the gate is fully closed.

Each interceptor gate shall be controlled by a System Control Panel, as specified in Article 1.05.B herein. The functional controls for the system are described in Article 1.14, herein.

In the absence of electrical power, each gate and the associated dogging pins shall be operated hydraulically by the energy stored within the system's accumulators. To support operation of the hydraulic power unit and accumulators during power loss, the control panel shall have an uninterruptable power supply (UPS) as specified herein.

The Equipment Manufacturer shall also furnish Bypass Gates (24" x 24" at the northern interceptor gate location and 30" x 30" at the southern interceptor gate location) to allow limited service flow through the chamber when the interceptor gate is closed. The Bypass Gates are also used to support maintenance and repair activities for the interceptor gate. Both the Interceptor Gate and Bypass Slide Gates shall be designed and coordinated to operate through a common Hydraulic Power Unit (HPU) and System Control Panel.

Each bypass gate is normally closed and shall be opened prior to the operation of the main gate

Opening and closing of the interceptor and bypass gates in the absence of electrical power is not automatic and shall occur only upon an open/close command selected by the City's staff locally or remotely through the use of the System Control Panel, accumulators or the portable HPU.

J. The following index of this Section is included for convenience:

Article Title Page

GENERAL 365

1.01 Summary 365

1.02 Payment 368

1.03 Related Sections 368

1.04 References 368

1.05 Description 370

1.06 Quality Assurance 393

1.07 Submittals 396

1.08 Delivery, Storage, and Handling 402

1.09 Spare Parts, Special Tools, and Supplies 403

1.10 Special Warranty Provisions / Guarantee Periods 403

PRODUCTS 404

1.11 COMPONENTS SUPPLIED TO OR PROVIDED BY EQUIPMENT Manufacturer 404

1.12 Materials / Equipment 416

1.13 Fabrication / Assembling / Finishes 418

1.14 Controls 419

1.15 Source Quality Control / Shop Tests 424

EXECUTION 430

1.16 Examination / Preparation 430
1.17 Installation 430
1.18 Field Testing / Quality Control 430
1.19 Startup / Demonstration 431
1.20 Adjusting / Protection / Cleanup 431
APPENDIX A – INPUT / OUTPUT LIST 432

1.02 Payment

A. Not used.

1.03 Related Sections

A. Section 01 43 10 - Quality Assurance Inspection

B. Section 01 78 25 - Operations and Maintenance Manuals

C. Section 05 05 23.02 - Miscellaneous Metal Fastenings

D. Section 40 05 59.02 Interceptor Gate Installation

E. Section 40 05 97 Identification for Process Equipment

1.04 References

A. The American Society of Mechanical Engineers (ASME):

B1.20.1 Pipe Threads, General Purpose (Inch)

Boiler and Pressure Vessel Code Section IX

B. American Society for Testing and Materials (ASTM):

A126 Standard Specification for Gray Iron Castings for Valves, Flanges and Pipe Fittings

A167 Standard Specification for Stainless and Heat-Resisting Chromium-Nickel Steel Plate, Sheet, and Strip

A276 Standard Specification for Stainless Steel Bars and Shapes

A320 Standard Specification for Alloy-Steel and Stainless Steel Bolting for Low-Temperature Service

A380 Standard Practice for Cleaning, Descaling, and Passivation of Stainless Steel Parts, Equipment, and Systems

A572 Standard Specification for High-Strength Low-Allow Columbium Vanadium Structural Steel

F1069-87 Standard Specification for Doors, Watertight, Gastight/Airtight and Weathertight, Individually Dogged, for Marine Use

F1073-87 Standard Specification for Door Fittings, for Watertight /Gastight /Airtight, Weathertight, and Non-Tight Doors, for Marine Use

F1196-00 Standard Specification for Sliding Watertight Door Assemblies

C. America Water Works Association (AWWA):

C540 Power Actuating Devices for Valves and Sluice Gates

C541 Hydraulic and Pneumatic Cylinder and Vane-Type Actuators for Valves and Slide Gates

D. American Bureau of Shipping (ABS)

E. American Institute of Steel Construction (AISC)

Specifications for Design, Fabrication, and Erection of Structural Steel for Buildings

F. American Iron and Steel Institute (AISI)

304, 316, 316L

G. American Society of Civil Engineers (ASCE) 7-10, Minimum Design Loads for Buildings and Other Structures, Chapter 13

H. American Society of Mechanical Engineers (ASME)

I. American Welding Society (AWS)

Structural Welding Code D1.1, D1.3, D1.6

J. American Society for Nondestructive Testing Recommended Practice No. SNT-TC-1A

K. Society of Automotive Engineers (SAE):

J356 Welded Flash-Controlled Low-Carbon Steel Tubing Normalized for Bending, Double Flaring, and Beading

J524 Seamless Low-Carbon Steel Tubing Annealed for Bending and Flaring

J525 Welded and Cold Drawn Low-Carbon Steel Tubing Annealed for Bending and Flaring

L. NYCEC - Electrical Code of the City of New York.

M. National Electrical Manufacturers Association (NEMA):

Enclosure Type 4X

Enclosure Type 7

Enclosure Type 12

KS-1 Heavy Duty and Dead-Front Enclosed Switches

ICS Industrial Control and Systems General Requirements

ICS 2 Industrial Control and Systems, Controllers, Contactors and Overload Relays rated 600V.

ICS 5 Industrial Control and Systems Control-Circuit and Pilot Devices

ICS 6 Industrial Control and Systems Enclosures

N. National Fire Protection Association (NFPA):

National Electrical Code

O. Underwriter Laboratories (UL)

UL 98 - Enclosed and Dead-Front Switches

UL 508- Industrial Control Equipment

UL 489- Molded-Case Circuit Breakers, Molded-Case Switches, and Circuit Breaker Enclosures.

1.05 Description

A. General Design Requirements

This Section provides a summary of specific design requirements for the main Interceptor Gate System components. Specific manufacturer and materials are covered under the Products part of this section.

Interceptor gate systems identification number, location, service, type, size, design pressure, and type of operating system are listed herein.

The size and footprint of each interceptor gate system component shall not exceed the layout shown on the Contract Drawings.

The Equipment Manufacturer shall furnish engineering services in support of the interceptor gate system and is required to submit the complete designs of the interceptor gate system equipment, including drawings and calculations, signed and sealed by a licensed Professional Engineer registered in the state of NY for review and approval.

The quantity and general arrangement of interceptor gate systems shall be reflected accurately on the shop drawings submitted to and approved by the Engineer.

The interceptor gate system shall be designed with four modes of operation, all of which shall be fully described in the Operating and Maintenance Manuals:

a. Normal mode using the available incoming commercial power supply of 480 VAC, 3 phase, 60 cycles for the Hydraulic Power Unit starter and 120 VAC, 1 phase, 60 cycles for the System Control Panel.

b. Emergency Power mode using an onsite emergency power supply of 480 VAC, 3 phase, 60 cycles for the Hydraulic Power Unit (HPU) starter and 120 VAC, 1 phase, 60 cycles for the System Control Panel (SCP).

c. Emergency backup mode using uninterrupted power supply (UPS) capable of lasting at least 4 hours under full system load for the control of accumulated hydraulic pressure to operate the interceptor gate and bypass gate through at least one full open/close cycle as defined in Article 1.05.H, herein.

d. Portable hydraulic power unit as described in Article 1.11.

The interceptor gate systems shall be designed when closed to withstand, on either side of the gate, head of water as specified herein measured to the invert of the gate.

The interceptor gate systems shall be designed to close against a maximum unseating head of 45 ft measured to the invert of the gate.

The interceptor gate systems shall be designed to open against a net maximum differential seating head of 12 ft in both directions (seating and unseating).

The bypass gate shall be designed to open against a maximum seating or unseating head of 39 ft measured to the invert of the bypass gate under normal operating conditions.

The interceptor gate system including electrical and hydraulic components shall be designed to have a useful service life of 25 years with proper maintenance.

The interceptor gate hydraulic operating system shall be designed to maintain the position of the interceptor gate with no drift under flowing conditions with differential head specified above.

The interceptor gate system and bypass gate shall be designed to require minimal maintenance. The interceptor gate panel and bypass gate slide shall have permanent lifting lugs for removal for maintenance. All anticipated maintenance shall be documented in the Operating and Maintenance Manuals provided by the Equipment Manufacturer in accordance with Article 1.07.

Interceptor Gate components installed within the interceptor gate chambers shall be designed to be submersible and manufactured with a waterproof cover designed to withstand turbulent flows.

Electrical wiring of components inside the chamber shall be in accordance with the National Electrical Code (NEC), with the required potting fittings. Conductors for intrinsically safe circuits shall not be run through conduits common with non-intrinsically safe circuits.

All equipment shall be provided with grounding lugs and bonded..

For below grade installations, continuous cable and conduit shall be provided from each cylinder unit with no splices permitted to the respective control enclosure or junction boxes as shown on the Drawings. The cable shall be long enough to provide at least five feet of additional cable in each control enclosure.

For above grade installations, all field connections for the hydraulic power unit assembly (hydraulic pump, reservoir and controls in enclosure) shall be made to a factory-installed external NEMA 4X terminal box suitable for accepting electrical conduit and conductor connections.

All mechanical and electrical non-structural components within the Interceptor Gate structures are subject to Seismic Design Category ‘D' and Risk Category 'IV'. All mechanical components within the Gate structures shall have an Importance Factor (Ip) of 1.5 (required for continued operation of the facility). These components shall be designed, installed, anchored, and braced to resist seismic forces in accordance with ASCE 7-10, Chapter 13. These components shall be furnished with a manufacturer's certificate of seismic qualification in accordance with ASCE 7-10, Chapter 13. Bracing support members shall be Type 316 stainless steel for bolted construction and Type 316L for welded construction. All bracing support fasteners shall be Type 316 stainless steel. Restraint and anchoring calculations certifying seismic compliance shall be calculated, signed, and sealed by a licensed New York State Professional Engineer.

The interceptor gate system shall be designed with no hydraulic impact to the existing interceptor flow conditions when in the open position.

B. System Control Panel

The interceptor gate system critical operation shall be exclusively controlled by relay-based panel components. The System Control panel shall also include a Programmable Logic Controller (PLC) user interface and an Operator Interface Terminal (OIT) panel for the purpose of only local advanced system monitoring and troubleshooting and communicating remote operation gate position indication and common alarms designed to function integrally with the Hydraulic Power Unit. The system control panel shall be capable of operating the interceptor gate system locally and remotely by accepting remote input(s) and output(s) through a separate telemetry panel, furnished by others, in accordance with the Contract.

The interceptor gate systems shall be designed to operate with the System Control Panel housed within each interceptor gate building.

The Equipment Manufacturer shall provide junction boxes, conduit and wiring to interconnect system components installed inside the interceptor gate building, as shown on the Contract Drawings.

The Equipment Manufacturer shall provide junction boxes, conduit and wiring to connect proximity switches to corresponding junction boxes inside of the interceptor gate chamber, as shown on the Contract Drawings.

Concealed stainless steel piano type hinges shall be used to secure the front doors to the enclosure. The hinges shall be for the entire door height. Lifting lugs shall be provided. All seams shall be continuously welded and ground smooth, with no holes or knockouts. Door and enclosure stiffeners shall be welded into the enclosure as required to maintain flat smooth surfaces.

The panel shall be factory assembled in a UL 508A certified facility, pre-wired and shall include all controls necessary for local and remote operation. The panel shall be designed to accept electrical conduits in coordination with the final equipment electrical routing and building layout. The height of the top of the panel shall not exceed 6 feet – 6 inches. The width of the panel shall be as required to satisfy the requirements of these specifications. The weight of the OIT shall be considered so that the door does not sag thus preventing it from operating properly.

Control equipment shall be UL listed and properly designed with relation to the characteristics of operation of the motor and or devices controlled. Submit proof that the materials, appliances, equipment, or devices that are provided under this Contract meet the requirements of Underwriters Laboratories, Inc., in regard to fire and casualty hazards. The label of or listing by the Underwriters Laboratories, Inc., will be accepted as conforming to this requirement.

The control panel shall be properly wired for connection to 120 VAC, 1 phase, 60 cycle power. A separate 480 VAC, 3 phase, 60 cycle motor starter and transformer within an enclosure shall be furnished for the HPU pumps with compatible controls and equipment seamlessly integrated with the System Control panel.

The starting, stopping and control equipment shall be provided with features of protection, current limitation, functioning and be complete with all accessories, appurtenances and supporting structures.

Intrinsically safe relays and barriers shall be provided where required to interface with equipment located in Classified (i.e., hazardous) areas and FM approved.

Surge Protection: All electrical and electronic elements shall be protected against damage due to electrical transients induced in interconnecting lines from lightning discharges and nearby electrical systems.

All surge protection devices shall be manufactured by a company that has been engaged in the design, development, and manufacture of such devices for at least 5 years.

Surge protection device installations shall comply with UL 94, the National Electric Code (NEC), and all applicable local codes.

Surge protection devices shall be installed as close to the equipment to be protected as practically possible.

Device Locations: As a minimum, provide surge protection devices at the following locations:

a. At connections between AC power and electrical/electronic equipment, including, but not limited to, panels, assemblies, and field mounted analog transmitters.

b. At both ends of copper-based communication cables which extend outside of a building, including at field instruments and the field side of analog valve position signals.

Surge protection device assemblies for connections to AC power supply circuits shall:

c. Be provided with two 3-terminal barrier terminal strips capable of accepting No. 12 AWG solids or stranded copper wire. One terminal strip shall be located on each end of the unit.

d. Have a nonflammable enclosure that meets or exceeds UL 94 V0 flammability requirements. The surge protection device shall be provided with provisions for mounting to interior of equipment racks, cabinets, or to the exterior of freestanding equipment.

e. Be constructed as multistage devices consisting of gas tube arrestors, high energy metal oxide varistors, or silicon avalanche suppression diodes. Assemblies shall automatically recover from surge events and shall have status indication lights.

f. Comply with all requirements of UL 1449, latest edition.

g. Be able to withstand a peak surge current of 10,000 amps based on a test surge waveform with an 8-microsecond rise time and a 20-microsecond exponential decay time, as defined in UL 1449.

h. Have the following characteristics:

1) Maximum Continuous Operating Voltage: 150VAC

2) Maximum Operating Current: 20 amps

3) Ambient Temperature Range: -20 degrees C to +65 degrees C

4) Response Time: 5 nanoseconds

i. Analog signal circuit protection

1) Surge protection device assemblies for analog signal circuits shall:

a) Have four lead devices with DIN Rail mounting.

b) Have a nonflammable enclosure that meets or exceeds UL 94 V0 flammability requirements.

c) Be constructed as multistage devices consisting of gas tube arrestors and silicon avalanche suppression diodes. Gas tube arrestors and diodes shall be separated by a series impedance of no more than 20 ohms. Assemblies shall automatically recover from surge events.

d) Comply with all requirements of UL 497B.

e) Be able to withstand a peak surge current of 10,000 amps based on a test surge waveform with an 8-microsecond rise time and a 20-microsecond exponential decay time, as defined in UL 1449.

f) Limit line-to-line voltage to 40 volts on 24VDC circuits.

g) Have the following characteristics:

(1) Maximum Continuous Operating Voltage: 28VDC

(2) Ambient Temperature Range: -20 degrees C to +65 degrees C

(3) Response Time (Line-to-Line): 5 ns

j. Communication circuit protection

1) Be designed for the specific data communication media and protocol to be protected (e.g., telephone, serial, parallel, network, data highway, coax, twinaxial, twisted pair, RF).

2) Provide protection of equipment to within the equipment's surge withstand levels for applicable standard test wave forms of the following standards:

a) IEC 60-1 / DIN VDE 0432 part 2

b) CCITT K17 / DIN VDE 0845 part 2

c) IEEE C62.31

k. Have a nonflammable enclosure that meets or exceeds UL 94 V0 flammability requirements.

l. Provide automatic recovery.

Supply a UL listed uninterruptible power supply (UPS) suitable for location in a UL 508A panel to protect the critical components for the operation of the gate, locally and remotely, from short power outages by switching to an emergency battery backup without data loss or downtime.

m. The UPS shall allow the operation of the interceptor gate and bypass gate through at least one full open/close cycle, as defined in Article 1.05.H, within at least a 4-hour period after loss of electrical power using energy stored within the accumulators.

n. The UPS shall support all functionality of the SCP.

o. Each UPS shall consist of a UPS module and battery modules as required to meet backup run time requirements.

p. Each UPS shall have condition monitoring for the health and status of the UPS.

q. Individual alarm contacts that shall close upon loss of the AC line, low battery level or operation of the static transfer switch. Circuit breaker for the AC input. EMI/RF noise filtering. Contacts shall be wired to the closest discrete input subsystem. All required interface software and hardware shall be provided.

r. An automatic bypass switch shall be provided on UPS units of greater than 2 kVA capacity. The transfer switch shall be of the solid state, make-before-break type and shall automatically transfer load from the inverter to the AC line in the event of an inverter malfunction. The total transfer time shall be 5 milliseconds or less. The transfer switch shall be provided with a manual override.

s. A manually operated maintenance bypass switch shall be provided for each UPS installation to allow hardware to be powered while the UPS is removed for maintenance. The bypass switch shall be the make-before-break type to ensure continuous power to the associated PLC.

t. Loss of AC power shall be monitored on the line side of the UPS and reported via normally closed (fail safe) unpowered contacts to the associated PLC/RTU. Surge protection shall be provided on the AC input circuit, which shall have a UL TVSS clamping voltage rating of 400 V with a <5 ns response time.

u. Nominal input voltage shall be 120 VAC with an autosensing input frequency of 47-63 HZ. The UPS shall be provided with an audible alarm and LED status indicator and operate from 0-50 deg C. The UPS alarm shall be communicated to and recorded through the PLC alarm history.

v. The batteries shall be of the sealed, lead acid or lead calcium gelled electrolyte type, or VRLA absorbed glass mat (AGM) type. The battery modules shall have a minimum full load backup time of at least 4 hours for critical components to operate the gate locally and remotely.

Where indicated or required due to ambient conditions defined in Article 1.05.F herein, and panel component ratings, panel-mounted closed loop air conditioning units and thermostatically controlled space heaters shall be provided to prevent condensation or maintain environmental conditions for installed components.

w. A 24v, minimal 100 cfm and adequately sized, compact cooling fan with finger guard, to keep air circulating within the enclosure shall be provided and located adjacent to the PLC CPU.

x. Air conditioning units shall both cool and dehumidify the cabinet's internal air. Each air conditioner shall be sized to handle current and future (with specified spare capacity filled) heat loadings from all equipment mounted inside the cabinet.

y. The temperature inside each enclosure containing digital hardware (e.g., PLC, computer, Ethernet switch) shall be continuously monitored and shall generate an alarm to the nearest PLC if the temperature rises to an adjustable, preset high temperature. This thermostat shall be

independent and separate from the thermostat used to control the temperature in the enclosure described above. Enclosure “high interior temperature” alarm shall be displayed on the OIT or OIT.

Programmable Logic Controller (PLC): The PLC function shall be capable of controlling and monitoring the following, independent of the normally operating relay-based control system:

QTY	SYSTEM CONTROL PANEL (SCP)
CONTROL	
1	Interceptor Gate (through hydraulic system) -open/close
1	Dogging Pins (for minimum of 2) – extend/retract in Local Mode
1	Bypass Gate (through hydraulic system) – open/close
MONITOR	
3	Interceptor Gate Position proximity switches
2	Dogging Pin Position (each of 2 minimum) proximity switches extended/retracted
2	Bypass Gate Position proximity switches
2	Control Mode – Local/Remote
5	Interceptor Gate Status – open/closed/in transit/45 degrees/fault
4	Bypass Gate Status – open/closed/ in transit/fault

z. Component Monitoring: the monitoring of components for fault conditions and the orderly alarming and logging of the fault.

aa. Viewing windows in the PLC door shall be provided. Diagnostic indicators shall be provided to show I/O status, DC power, PC run, Battery low, and Forced I/O. All slots shall be labeled. All terminals shall be labeled.

bb. The PLC shall come complete with system processors, disconnecting means, auxiliary power supply, rack mounted power supplies and input output cards as required to satisfy the conditions for this project.

cc. Provide one (1) spare installed input card and one (1) spare installed output card in addition to input and output cards required to satisfy specified programming conditions. Label these slots as “SPARE CARDS” on the panel wiring diagram and directly on the card itself. These installed spare cards are in addition to the on-the-shelf spare cards specified to be furnished as spare parts.

dd. The I/O rack shall be provided with adapter module(s) allowing it to function with a remote processor through a single communications cable.

ee. The program instruction of the PLC shall have capacitor backup to provide at least one (1) week's backup of memory. In addition, it shall have battery backup to maintain memory for three years minimum.

ff. The PLC shall have EEPROM for permanent memory retention.

gg. Program timers in both on-delay and off-delay, counters in both count up and count down. Sequencers and shift registers shall be provided.

hh. The PLC's power supply shall accept AC power of 85-132 volts, 170-265 volts at 50/60 hertz, or 24 VDC. It shall be capable of withstanding a power loss for a minimum of 20 milliseconds while remaining in operation.

ii. The CPU shall be self-contained, provide ladder rung program execution, and support remote or local programming. The unit shall also supply I/O scanning and inter-processor and peripheral communication functions.

jj. The program storage medium shall be solid-state RAM type, EEPROM type cartridge. Memory capacity shall be sized to allow for future programming expansion on 30% minimum.

kk. During normal operation, a malfunction in any remote input/output channel shall affect the operation of only that channel and not the operation of the CPU or any other channel.

ll. Replacement of input or output cards (module) shall be accomplished without disturbing panel wiring. Each input and output module shall contain a visual indicator to display On/Off status of individual input or output points.

mm. The PLC shall also be configured to prevent unauthorized remote access. At the City's request and authorization, the Equipment Manufacturer shall provide troubleshooting and software support during the warranty period.

Operator Interface Terminal (OIT): A color operator terminal shall be provided and built into the panel for the purpose of allowing the operator to select operating mode, control gates, monitor gates and pins position, and acknowledge alarms.

nn. OIT shall utilize real time clock and 128 MB application memory.

oo. Provide cable to allow download/upload of Panelview Plus operator terminal to PC computer. Provide access code security to be assigned to any screen.

pp. Display shall be an Analog Resistive Touch screen with 1024 x 768 18bit Color Graphics with antiglare overlay accessory for all terminals and keypads.

qq. OIT shall utilize Ethernet and RS-232 communication. Provide two USB port and USB slot for transferring files, logging data or system upgrades.

rr. The operator interface and PLC program shall comply with the following:

1) A main graphic listing the name of the Equipment Manufacturer, facility name, and the consulting engineer's company name. The graphic shall also show the direct dial telephone numbers for the manufacturer's customer service department, engineering department, and the PLC programming department.

2) A display screen with a simple schematic of the Interceptor Gate system shall be provided. The interceptor gate, bypass gate, and hydraulic system shall be represented graphically. The color of the interceptor gate equipment shall be indicated based on its status as follows: Red for running, on, hand, or open, Green for off, stopped, or closed, Amber for alarm condition, Flashing Amber for silenced alarm, and Flashing Red for fault signal, or while equipment is in motion. Submit a screen shot for all displays for review and approval. The designations shall follow the layout of the control panel when looking at the monitor. This screen shall also display the following: Manufacturer's standard display screen showing the status of each equipment component. The specified color designation for running, stopped, open, or closed equipment shall be used; An active alarm screen shall also be provided with acknowledge, silence and scrolling feature buttons.

The following additional equipment shall also be powered from the System Control Panel and HPU starter enclosure panel and be provided with individual properly sized and labeled circuit breakers and as further specified in Article 1.11:

ss. Disconnect switch (s)

tt. Motor Starter (s)

uu. Annunciation panel, indicating the minimum alarms per Article 1.14.

vv. Pushbuttons and selector switches for local control of each directional gate cylinder operator. Switches shall maintain position which latch in a set position completing action unless stopped by the operator.

ww. Automatic pump control to automatically alternate the lead / lag pumps in the event of a pump failure.

xx. Duplex pump fail lights and reset buttons.

yy. Digital meters or operator interface screen to indicate the position of the cylinder operators.

zz. All indicating lights and push buttons shall be of the heavy-duty, full size, oil tight construction. They shall be NEMA rated in conformance with the panel requirements.

aaa. End of travel indicating lights illuminated by the cylinder operator proximity switches

bbb. Remote-Local control switches

ccc. A Blue fault light shall be included which actuates and flashes in the event of PLC failure.

ddd. Pump Manual / Off / Auto selector switches.

Wiring shall be accomplished in a neat workmanlike manner and run in a duct where practical. All ducts shall be oversized by 25%. Where not practical it shall be supported and tied into position with nylon cable ties. All wiring and terminals shall be identified with a number code matching the approved wiring schematic. Each device inside the panel shall be properly identified as to function using laminated white on black nameplates or labeling tape, if nameplates are not practical.

eee. Wire terminations shall be tubular compression. All terminals shall be strip mounted and be a voltage rating of 600 volts, amperage rating 25 amps.

fff. Each device of the panel that is powered from the panel shall be provided with a properly sized circuit breaker. Gang or group the circuit breakers in one area of the panel and provide a printed directory for the breakers. The directory shall be screw attached to the subpanel. The directory shall be engraved laminated phenolic with white background, black 3/16” high letters to identify each circuit breaker.

ggg. All control panel wire shall be multi-strand machine tool wire minimum. Insulation shall be MTW. Wiring color shall be:

WIRE SIZES AND COLOR CODING		
Description	Size	Color
AC POWER (HOT)	THW / 12	BLACK
AC POWER (NEUTRAL)	THW / 12	WHITE
AC SIGNAL/CONTROL (HOT)	THW /16 AWG	RED
AC SIGNAL/CONTROL (NEUTRAL)	THW /16 AWG	WHITE
DC POWER (+)	THW / 16 AWG	BLUE
DC POWER (-)	THW / 16 AWG	BLUE w/WHITE STRIPE
GROUNDING WIRE	THW / 12 AWG	GREEN
DC ANALOG (+)	TSP / 18 AWG	RED
DC ANALOG (-)	TSP / 18 AWG	WHITE

hhh. UL listed control relays for general control purposes shall be supplied with a pilot light to indicate when the coil is in an energized state. The

relay socket shall be panel or DIN rail mounted inside the enclosure. The relays shall provide the following ratings: 120VAC 60 hz coil, 10A contact rating (thermal), at 250 VAC (resistive), 80% PF. Expected life 10 million mechanical life cycles and an operating temperature range of -22 F to 131 F.

iii. Automatic transient protection for protection from the effects of lightning induced currents shall be provided. The suppressor shall have solid-state bi-directional componentry and failure indicator (neon).

C. Interceptor Gate

All components of the Interceptor Gate shall be designed to withstand the maximum head conditions indicated herein Article 1.05.A.

The interceptor gate shall be designed to close against the gate frame, compressing a resilient seal mounted on the gate panel. The design of the resilient seal shall be tested during the proof-of-design witness testing in accordance with the requirements of Article 1.15.A, herein. Fabrication of the full-scale seal shall not begin until the proof-of-design testing is complete and the test results have been reviewed and accepted by the Engineer. If required, a maximum of two (2) additional proof-of-design witness tests shall be performed at no additional cost to the City.

The interceptor gate panel shall be constructed of material specified in Article 1.12 herein and shall consist of front and back plates welded to reinforcing structural members. The panel shall be of watertight construction. Thickness of the gate panel components shall be sufficient to withstand all operating loads within the deflection and stress limits as defined in Article 1.06.H.

The maximum allowable leakage through the Interceptor Gates at the design head, when closed, shall be 0.5 gallons per minute per linear foot of the seating perimeter of the gate (gpm/lf) with the seal in place and up to 1,000 gpm total with no seal.

Two dogging pins per interceptor gate shall be provided to secure the gate panel to the frame in the closed position.

The centerline of each dogging pin shall be located at a maximum of 6 inches on either side of the horizontal centerline of the interceptor gate such that each dogging pin is accessible for maintenance, removal, and observation during dry-weather flow conditions.

A gasketed watertight access cover shall be provided on the backplate of the gate panel for access to the dogging pin assemblies. The gasket shall be of EPDM material and be mechanically fixed to the access cover. The access cover shall be hinged and tethered to the backplate such that the cover will remain attached to the gate when the access cover is open. The hinge shall be the same material as the gate panel. The cover shall be secured with bolts flush with the cover surface to prevent debris accumulation. The top and bottom edges of the cover shall not be more than 9 inches on either side of the horizontal centerline of the gate. The horizontal length of the cover shall be sufficient to allow access to the dogging pin mechanisms for maintenance, removal, and observation during dry-weather flow conditions.

Each dogging pin shall be designed to independently secure the gate panel in the closed position, and shall be designed to accommodate the maximum deflection determined in the Finite Element Analysis detailed in Part 1.06.H of this Section, plus an additional 50% margin, not less than 1 inch total.

The interceptor gate frame shall be fabricated with extension plate(s) for torsion tube mounting and extension plate for dogging pin anchorage. The extension plates shall be welded to the gate frame and shall serve as the mounting surface for the torsion tube and dogging pin anchorage. The interceptor gate frame with extension plates shall be embedded in concrete, and a leading edge shall project from the gate frame as shown on the Contract Drawings. The extension plates shall be connected to anchor plates with stainless steel threaded rods with stainless steel adjustable couplers. The anchor plates shall be secured to the inner face of the exterior concrete chamber wall as shown on the Contract Drawings. The gate frame, extension plates and the anchorage shall be designed, when embedded in concrete, to withstand the operating forces of the interceptor gate as determined and provided as part of submittal item in Article 1.07.

D. Bypass Gate

Bypass gates within the interceptor gate chambers shall be supplied by the Equipment Manufacturer.

Bypass gates shall be slide gates and shall meet the requirements of AWWA C561, except as otherwise specified.

Design/fabricate bypass gates for specified seating or unseating pressures, measured to the invert of the gate.

Bypass gates shall be mounted to a square flange on the side outlet of the spool piece, provided by others, as described in Section 40 05 59.02, Article 1.05.A.5. The bypass gates shall be rising stem with hydraulic actuator installed at the intermediate level within the interceptor gate chambers. The bypass gate actuator shall be designed such that the piston rod is retracted when the gate is closed. The actuator shall be supported by a top wall-mounted bracket. A gasket between the mounting flange and bypass gate frame shall be provided by the Equipment Manufacturer.

Provide one-piece side frames and guides with vertical stiffeners at edges of horizontal stiffeners to reduce high local stresses at the edge of horizontal stiffeners.

E. Interceptor Gate and Bypass Gate Hydraulic Cylinders

The cylinders shall be sized to operate the interceptor and bypass gates to transmit 125% of the maximum required thrust. The oil shall be delivered at a pressure exceeding the minimum design pressure accounting for all system losses, including, but not limited to, accumulators, tubing, valves, and other system components.

The hydraulic cylinder for the interceptor gate shall have a mounting plate connected to an anchor plate with stainless steel thru-bolts inserted through sleeves. The anchor plate shall be installed on the outer face of the exterior concrete chamber wall with hardware as shown on the Contract Drawings. The mounting plate and anchorage shall be designed to withstand the operating forces of the hydraulic cylinder as determined and provided as part of submittal item in Article 1.07.E.

Design the interceptor gate and bypass gate cylinders with lifting lugs to allow removal and provide enough space for maintenance access.

The interceptor gate and bypass gate hydraulic cylinders shall be suitable for oil operation, designed for a pressure not less than 3,000 psig and meeting the applicable requirements of AWWA C541 and ASME. The hydraulic cylinders shall be a heavy duty NFPA Tie Rod type, double-acting, rated for the maximum calculated operating working pressure. The mounting configuration shall be determined by the actual gate configuration with the following provisions:

a. Lip seals for minimum leakage under static load conditions.

b. The rod cartridge shall be removable with no special tools required.

c. SAE O-ring ports.

d. A564 17-4PH Stainless Steel, chrome plated rod.

e. The L/R ratio of the rod shall be less than 200.

f. The rod shall be sized to safely withstand 1.25 times the full cylinder output at maximum system pressure.

g. Provide thread contact surfaces with a minimum 63 micro-inch finish.

h. The rod diameter for the bypass gate cylinder shall be based on the following modified Euler's equation:

P/a = 571,000,000/ [(L/R)2]

1) P = compressive force applied to the rod, lbs

2) a = cross sectional area of rod at the root of thread, if any, square inches

3) L = unrestrained length, inches

4) R = radius of gyration, inches

5) The term "P/a" shall not exceed 2/3 the yield stress of the rod material.

6) To determine rod diameters, force P shall be 25% greater than the stall thrust (1.25 x stall thrust) for hydraulic operation.

Test/bleed ports shall be installed at each cylinder connection. The test ports shall permit a pressure gauge to be used to read cylinder pressure without interrupting cylinder operation with a quick disconnect protected by a cap secured by chain.

The hydraulic cylinder cover for both interceptor and bypass gate shall be capable of being removed without the removal of the cylinder from its support structure. A bolted flange connection with resilient O-ring seal shall be provided at the separation point of the cover from the base. An O-ring seal shall be furnished at every separable penetration of the cover, such as that at the cylinder rod penetration.

Any wiring penetrations of the cover shall be through conduit fittings seal welded through the fixed base portion of the cover. A factory seal shall be provided in the factory conduit internal to the cover.

The bypass gate hydraulic cylinder shall be a heavy-duty double-acting operator with lifting stem that meets the requirements for slide gate operators, except as modified herein. The stem/cylinder actuation shall be designed and manufactured such that the cylinder rod is fully retracted when the gate is in closed position, and fully extended when the gate is fully open.

F. Hydraulic Power Unit (HPU) with Hydraulic Oil

The HPU shall be self-contained for an operating pressure of 5,000 psi. The interceptor gate system HPU shall be designed and fabricated to open or close the interceptor gate within a

minimum of 20 to a maximum of 30 minutes after the flushing cycle delay timer has expired, under design operating conditions, against the maximum seating or unseating head as specified herein.

The HPU shall be capable of recharging the accumulators within 60 minutes from a fully discharged condition.

The HPU system shall be designed to operate within a temperature controlled and ventilated interceptor gate building with temperatures ranging from 40 degrees to 110 degrees Fahrenheit.

To maintain a minimum hydraulic oil temperature of 55 degrees F in the oil reservoir, a heater shall be furnished for the oil reservoir and installed such that the heater can be accessed and removed for maintenance without requiring drainage of the reservoir.

All components shall be mounted in a position which will facilitate adjustment, operation, and maintenance of the unit. Permanently installed lifting eyes and equipment skids shall be provided to facilitate the handling and removal of the entire HPU assembly from the Interceptor Gate Building.

Hydraulic Pumps shall be positive displacement gear pumps, fixed or pressure compensated construction. Each pump shall be capable of providing oil at the pressures and flow rates necessary to meet the actuator load and timing requirements. Rotation direction shall be clearly marked on each pump / motor assembly.

Dual Alternating Pumps and Motors shall be furnished as follows:

a. Provisions shall be made in the electrical control circuit to alternate the pumps at each start cycle or as selected by a manual /off/auto selector switch. The control circuit shall be capable of detecting the lead pump failure and starting the lag pump in the event of pump failure.

b. Check valves shall be located downstream of each pump to permit removal of a pump without shutting the system down.

c. Both pumps will alternate with each call to start a pump. If one pump has failed to establish flow, the second pump will start with each call for pumping.

d. Electric motor for the hydraulic pumps shall be 480V, 3 phase, 60 Hz and be operated from a dedicated starter control enclosure, separate but electrically connected with the System Control panel

e. Motors shall be designed, built, and tested in accordance with the latest applicable editions of ANSI/IEEE, NEMA, UL and NYCEC. The classifications, ratings, performance and testing of all motors shall be in accordance with the latest edition of NEMA MG1.

f. Motors shall be premium efficiency type and shall have nominal efficiencies in accordance with NEMA MG1. Motors with horsepower or rpms not listed by NEMA shall conform to comparable standards of construction and materials as those for listed NEMA motors.

g. Three phase squirrel cage motors shall be severe duty and shall conform to the requirements of IEEE 841

h. Unless otherwise required by the load, all motors shall be NEMA Design B, normal starting torque. Locked rotor KVA/HP shall not exceed NEMA Code Letter G for 20 HP motors and larger.

i. The design of the stator, rotor and shaft shall be in accordance with the approved practice of leading manufacturers. The motor frame shall be a rigid structure, designed to maintain the lamination in correct alignment and shall not be dependent on the lamination or bolts for rigidity.

j. The insulation system for three phase AC motors shall be rated Class F, with a service factor of 1.15 times the nameplate horsepower rating when operated on a sine wave supply and a service factor of 1.0 on an adjustable frequency supply. Temperature rise shall be limited to Class B insulation system when motor is operated continuously at rated horsepower with an ambient temperature not exceeding 40 degrees C.

k. Severe duty motors shall include a corrosion resistant treatment. Severe duty motors shall have a cast iron frame, cast iron end brackets, cast iron conduit box, stainless steel “T” drains in both end brackets, corrosion resistant fan, and stainless steel hardware in accordance with Article 1.12. herein.

l. All machined bolts and screws and other hardware shall be of the hex head type and shall be zinc plated.

m. Stainless steel hardware shall be used on severe duty motors.

The HPU and Cylinder operators shall be designed for hard-piped field connections, except where shown differently on Contract Drawings. The Manufacturer shall specify the minimum diameter for field tubing and connections. All tubing and connections shall conform to the following:

n. All tubing and connections shall be of designed with a diameter which prevents cavitation or starvation and undue temperature rise or turbulence.

o. Suction lines shall be sized and located according to the permissible inlet conditions as recommended by the pump manufacturer and such that the hydraulic fluid velocity does not exceed 4 feet per second.

p. Return line piping shall be selected such that the hydraulic fluid velocity does not exceed 15 feet per second.

q. Pressure line piping shall be selected such that the hydraulic fluid velocity does not exceed 25 feet per second.

r. All hydraulic tubing, piping and valves shall be Type 316L stainless steel. Fittings shall be selected for minimum leakage, with SAE O-ring port connections and brazed face seal O-ring Boss tube connections.

s. The HPU tubing and piping shall be capable of withstanding the maximum system operating pressures with a safety factor of 150%. Minimum HPU tubing and piping thicknesses are provided in Article 1.11.B – Table 1, herein.

The HPU shall be provided with fittings and isolation valves to accept portable HPU connecting hoses.

Provide dual filter arrangements with pressure differential monitoring and automatic bypass on high differential pressure.

Suction line filters shall be in the suction line to each motor-driven pump. Each suction filter shall be capable of providing filtration as specified herein. The filters to each motor-driven pump shall have a visual indicator to provide the element status.

A suction strainer shall be on the inlet of the suction line to each pump.

A return filter shall be in the return line of the system. This filter shall be capable of providing filtration to the as specified herein. The return filter shall have a visual indicator to provide the element status.

A pressure filter shall be in the supply line with a visual indicator to provide the element replacement status.

Filters shall be located so that the cartridge can be changed with no oil contamination of the hydraulic power unit surface or electrical components.

Provide a pressure reducing valve (PRV) between pumps and the main valve manifold.

G. Hydraulic Reservoir

The reservoir shall be designed and constructed to minimize entry of foreign matter including water.

The reservoir shall have a minimum capacity of 400 gallons or 1.50 times the volume of the return oil, whichever is greater. The reservoir shall be provided with reservoir isolating clean vent and integral filter/strainer/breather capable of permitting an air exchange to atmosphere. The vent pipe shall terminate no lower than at least 1 foot above the architectural design flood elevation of +14 (NAVD88) at the north interceptor gate building and +13 (NAVD88) at the south interceptor gate building, as shown on the Contract drawings, to prevent the admission of contamination to the reservoir. The filter shall be installed within the building envelope.

The reservoir shall have a full-length oil level indicator. The indicator shall be clearly marked with high and low oil levels and shall be designed to provide clear indications throughout the life of the system.

The supply and return lines shall be within 1-1/2 pipe diameters from the reservoir bottom. Return lines to be terminated below oil level utilizing a 45-degree angle for oil dispersion.

The reservoir shall have a baffle between the suction and return lines.

The reservoir shall be skid-mounted and designed and sized to permit the mounting of all pumps and motors, valves, and manifolds. The reservoir and all mounted equipment shall be sized and customized, as required, to enable it to be removed.

Hydraulic oil shall not require draining/replacement over the useful service life of the hydraulic unit (with proper maintenance).

H. Hydraulic Accumulator Assembly

A hydraulic accumulator assembly shall be provided along with all internal hydraulic hoses, hydraulic tubing, fittings, valves, and sensors.

In the absence of electrical power, under design operating conditions, the accumulators shall be capable of opening or closing the gate within 45 minutes.

The hydraulic accumulator tubing and piping shall be capable of withstanding the maximum system operating pressures with a safety factor of 150%. Minimum accumulator assembly tubing and piping thicknesses are provided in Article 1.11.B – Table 1, herein.

The accumulator assembly shall be 5,000 psig rated for a hydraulic piston type system sized with enough capacity for operation of both the interceptor gate and bypass slide gate, each capable of moving in the following configurations and sequence, which is defined as one "full open/close cycle":

a. Bypass slide gate fully opened from fully closed position;

b. Interceptor gate fully closed from the fully open (90 degree) position;

c. Interceptor gate re-opened to the intermediate (45 degree) open position to flush an obstruction that would prevent the gate from fully closing;

d. Interceptor gate returned to the closed position from the intermediate (45 degree) position;

e. Interceptor gate returned to fully open (90 degree) position.

f. Bypass slide gate returned to fully closed position.

There shall also be enough volume to prevent the piston from contacting the end caps.

The accumulators shall be sized for a maximum operating pressure of 5,000 psig and shall have the ability to be tested at 150% design pressure. Additionally, the accumulators shall be designed with a minimum plate thickness corrosion allowance of 1/16" and remaining thickness sufficient for the 25-year service life of the system.

All components shall be mounted in a position which will facilitate adjustment, operation, and maintenance of the unit. Accumulator assembly shall permit dismantling for individual accumulator isolation for maintenance. Permanently installed lifting eyes shall be engineered and designed to facilitate the handling of the accumulator components.

I. Hydraulic Manifold

The Equipment Manufacturer shall furnish all piping, tubing, hoses, special fittings, valves, and adapters required to interconnect system components installed inside the interceptor gate buildings, as shown on the Contract Drawings.

Hydraulic Manifold shall include the fittings and valves necessary for operation of the interceptor gate system as described herein. These components include, but are not limited to, the following:

a. Relief Valves: A pressure relief valve shall be furnished on the discharge of each hydraulic pump. There shall be no valves to shut off flow between the pump discharge and the relief valve. An additional pressure relief valve, discharging back to the reservoir, shall be furnished between the pump and the accumulator. Pressure relief valves shall be located downstream of the pressure reducing valve.

b. Directional, Pressure, and Flow Control Valves: The direct shift directional valve shall be a 2 or 3-way poppet or spool block, 3-position, solenoid-operated directional control valve with manual override feature, to permit directional control in the event of power failure. This valve shall be spring-centered, with “A” and “B” ports directed to the “T” port in the center position.

c. Provide tank port coupling check valves in the return lines (T port of control valve). An additional manual bypass valve around the directional control valve shall be installed for redundancy.

d. Provide independent sequencing control valves for each of the Interceptor Gate dogging devices.

e. A pressure reducing valve shall be used to reduce the pressure on the extended (gate closing) side of the cylinder operator.

f. Pilot operated check valves shall be utilized to hydraulically lock the cylinder in position. The pilot operated check valves shall be capable of locking the cylinder operator in position in an unpowered condition.

g. Flow control valves shall be furnished in the hydraulic fluid circuit to control the rate of movement of the rod of the cylinder operator. The flow control valves shall be fully adjustable. The directional control valves, pressure reducing valves, pilot operated check valves, and the flow control valves shall utilize stack-mounted or cartridge mounted manifolds. The manifold shall be an integral part of the hydraulic power unit. Connections at the hydraulic power unit shall be terminated with lockable ball valves.

h. Pressure gauges shall be used on the outlet of each pump and at the manifold outlet of each cylinder operator. Pressure gauges shall be glycerin filled and shall have a range of 0 to 10,000 psi and installed with isolation valves.

Pressure, level, and temperature switches shall be used to provide an alarm and annunciation in the event of the following faults:

i. High oil pressure

j. Low oil pressure

k. Low reservoir oil level

l. Emergency low reservoir oil level

m. High reservoir oil temperature

n. Each gauge and pressure switch shall be capable of isolation and protected by a pressure snubber.

J. Hydraulic Connection Assemblies

The Equipment Manufacturer shall furnish all hydraulic connection assemblies and all special fittings, hoses, tubing, valves and adapters required to connect the interceptor gate hydraulic cylinder, bypass gate hydraulic cylinder, and dogging pins hydraulic cylinders to the hydraulic

connection assemblies inside of the interceptor gate chamber, as shown on the Contract Drawings.

Where flexible hydraulic hoses are required, the Equipment Manufacturer shall furnish hydraulic hoses as identified in Table 1 of Article 1.11.B herein. Quick-connectors shall be provided for flexible hydraulic hoses where feasible. The hoses shall be nitrile-based synthetic rubber with multiple high-tensile steel wire reinforcement and abrasion resistant polymeric cover.

Isolation ball valves shall be furnished near each cylinder port for interconnection with the hydraulic system. Ball valves shall be mounted on a plate and independent self-supported metal system designed to accommodate system vibration and to provide a leak-tight SAE connections between the hydraulic tubing and the flexible hydraulic hose.

K. Proximity Switches

Furnish electro-mechanical switches that shall indicate the position of the interceptor gate, dogging pins and bypass gates complete with all accessories. As a minimum, position indication equipment shall be provided for the following:

a. Dogging Pin EXTENDED/RETRACTED Position Switches for each pin

b. Interceptor Gate OPEN/45 DEGREES/CLOSED Position Switches

c. Bypass Gate OPEN/CLOSED Position Switches

L. Portable Hydraulic Power Unit (HPU)

The Equipment Manufacturer shall furnish a trailer-mounted, diesel-operated portable hydraulic power unit (HPU) and accessories, capable of operating the interceptor gate and the bypass gate. One portable HPU shall be provided for each interceptor gate system, to be operated from the outside of the interceptor gate buildings. The portable HPU shall be model GHPU-10 and manufactured by Godwin.

Each portable HPU shall be a trailer mounted unit in a sound attenuated enclosure that includes a gear type hydraulic pump, diesel engine, integral fuel tank, control panel, hydraulic hoses, and associated instruments. The portable HPU shall use the same type of oil as the interceptor gate system, as specified herein. If the reservoir is supplied separately, it shall be reinstalled or reconnected during assembly at the site, and thoroughly decontaminated prior to connection to the interceptor gate system.

The hydraulic power unit shall have an open center hydraulic circuit capable of providing up to 10.5 GPM at 3,500 psi at 2,400 RPM engine speed on a continuous basis with the capacity of providing flow and pressure as required for the operation of both the interceptor and bypass gates. The hydraulic circuit shall include a gear type hydraulic pump mounted to the engine flywheel, a minimum 10 gallon hydraulic reservoir, low oil and high temperature shutdowns, sight level gauge, pressure gauge, on/off detent control valve with integral adjustable relief valve, and quick disconnect fittings.

The diesel engine shall be a Yanmar 3TNV88C FT4 Diesel Engine or approved equal. The engine shall be water cooled and shall drive the pump by use of direct connected intermediate drive plate. The engine starter shall be 12 volt electric. Safety shut down switches for low pressure and high temperature shall be provided. Battery shall have 180 amp hour rating. The engine shall include a PrimeGuard Engine Controller, a tachometer and an hour meter. The engine shall have an

exhaust system with a muffler of suitable size. A certified continuous duty engine curve shall be supplied. The engine speed shall be adjustable to operate the portable HPU as required.

Integral fuel tank capacity shall be sufficient to provide at least 3 hours of operating time at full load.

The portable HPU shall be supplied with flexible hydraulic hoses with a minimum of 25-foot length to connect to the interceptor gate HPU inside the interceptor gate building and as required for the operation of the gate system. The hoses shall be Flextral NT300 ¾-inch I.D. with maximum working pressure of 5,000 psi, with nitrile tube and high-tensile steel four spiral wire with synthetic rubber cover.

The hydraulic hoses shall be provided with quick-connect W-Series High Pressure Hydraulic Couplings and fittings by Dixon, or approved equal.

The trailer shall have a hitch coordinated and compatible with City vehicle hitches. The tires and torsion bar suspension shall be adequately sized for the required load range ratings. The trailer shall be equipped with fenders, front and rear support stands, lifting bar, safety chains and side and rear reflectors. Trailer design shall be in compliance with applicable DOT regulations and be capable of being towed on the road at 50 MPH, with portable electrical connections for over the road usage, per applicable DOT Standards.

The portable HPU hydraulic components, engine, and trailer shall be shop primed and finish painted. Materials and thickness for priming shall be in accordance with manufacturer's standards.

If the interceptor gates are operated by portable HPU, the gates shall be capable of closing within 90 minutes of activation.

M. Identification of System Components

Mechanical equipment, instrumentation, piping, valves, tubing, and structures shall be properly identified. The Equipment Manufacturer shall provide identification for the system components as follows:

a. Quotation marks used herein this specification denotes wording of the nameplate or escutcheon legend plate

b. Nameplates shall be engraved laminated phenolic with white matte finish background, black 3/16” high letter engraving to identify each door-mounted component, and shall be mounted to the panel face without screws.

c. Nameplates shall be of 3/32-inch thick laminated phenolic type with white matte finish surface and black letter engraving.

1) Panel identification nameplates shall include 1/2-inch high letter engravings.

2) Panel mounted component (i.e., control devices, indicating lights, selector switches, etc.) identification nameplates shall include 1/4-inch high letter engravings.

3) Nameplates for front mounted devices shall be attached to the panel face with two stainless steel self-tapping screws unless otherwise specified.

4) NEMA 4 or 4X compliance shall not be compromised by unsealed methods.

5) Where screwed methods are not feasible, alternate attachment methods shall be considered on a case by case basis and submitted to the Engineer for approval.

6) Nameplate engravings shall include the instrument or equipment tag number and a descriptive title to clearly identify the process or equipment controlled by the panel. Nameplate details including engravings shall be submitted with panel drawings for approval.

7) Panel markings shall be in compliance with NEC Article 409.110 warning label for multiple sources of power in panel.

d. Tag all internally mounted instruments in accordance with the following requirements:

1) Tag numbers shall be as listed in the Instrument Index.

2) The identifying tag number shall be permanently etched or embossed onto a stainless-steel tag which shall be fastened to the device housing with stainless steel rivets or self-tapping screws of appropriate size.

3) Where neither of the above fastenings can be accomplished, tags shall be permanently attached to the device by a circlet of 1/16-inch diameter stainless steel wire rope.

4) Identification tag shall be installed so that the numbers are easily visible to service personnel.

5) Front of panel mounted instruments shall have the tag attached to rear of device.

e. Tagging of the following items shall be accomplished with the use of adhesive plastic as follows:

1) Brady USA, Inc., labels, or equal.

2) Tag all electrical devices (i.e., relays, timers, power supplies) mounted within control panels and enclosures.

3) Tag all pneumatic lines.

4) Numerically tag all terminal blocks.

5) Color code and numerically tag wiring at each end.

f. Provide a master nameplate - “INTERCEPTOR GATE SYSTEM CONTROL PANEL” This nameplate shall be 2 inches high with 1-inch high letters and be centered at the top of the panel above the operator

interface. The background shall be red with black letters. Attach this nameplate to the door.

g. Provide a yellow warning label attached to the door that reads as follows: THIS PANEL IS PROTECTED BY A MAIN CIRCUIT BREAKER. SHUT POWER TO THE PANEL BEFORE MAKING REPAIRS.

h. The manufacturer's company name, location and project number shall be shown on the front door on an aluminum nameplate.

Valve Identification Tags

i. Furnish and attach valve identification tags on all valves and controls.

j. Provide round fiberglass reinforced plastic discs tags, approximately 2 inches in diameter, made in conformity with the requirements of Article 1.05M. Provide tags with one 1/8 inch grommet protected hole at the top for fastening to the valve body using 1/16 inch diameter cable and splices or pins as approved. Provide grommets, cable splices and pins of stainless steel or other approved corrosion resistant material.

k. Provide numbering code for the identification tags in conformity with the Basic Code as specified by the Operation and Maintenance Manual for the plant. Assign identification numbers subject to the approval of the Engineer and in conformity with the entire piping and equipment identification system. Provide identification code for each valve and control without duplication. Provide lettering on identification tags not less than 5/16-inch-high and limited to two lines. Silk-screen lettering in correct color combination; stenciled or painted numbers and lettering will not be accepted.

l. In addition to the tagging requirements listed above, provide tags at all valves at pressures above 200 psig with the operating pressure within the valve shown.

Service Lines

m. Make direction-of-flow arrows for attachment to pipe identification signs from No. 16 U.S. gauge Type 304 stainless steel, the full width of the sign. Make the arrow head with a tapered point, about 90 degrees at the apex, extending one half of the sign width from the sign edge and one half of the sign width extending under the sign. Finish all edges of the arrow. Make point with a radius of 1/4 inch for the 3-1/2 inch wide sign and a radius of 3/16 inch for the 1-1/2 inch wide sign. Punch detents on the arrows to prevent twisting of the point. Drill one hole in the arrow in alignment with the hole in the pipe identification sign so that both sign and arrow can be mounted with the same screw and bracket.

n. Submit sample direction-of-flow arrows for both sizes of pipe identification signs to the Engineer for approval before installation.

o. Service Line Colors

GENERAL COLOR CODE		
	COLORS	
Service Line	Letters	Background
1. HYDRAULIC FLUID	Red	White
2. HIGH PRESSURE NITROGEN	Orange	Green

p. Component Nameplates

1) Provide nameplates for equipment and structures in the same color combination as the medium they service. Legends for nameplates must follow the terminology shown. Provide numbering system consistent with the Operation and Maintenance Manual.

2) The following is a representative list, not necessarily complete, of nameplate legends with appropriate color combinations to which the equipment identification number must be added:

N A M E P L A T E S			
Legend		Color Code	
First Line (1)	Second Line (2)	Lettering	Background
HYDRAULIC FLUID	PUMP **	Red	White
HYDRAULIC FLUID	TANK **	Red	White
HIGH PRESSURE NITROGEN	ACCUMULATOR **	Orange	Green
HYDRAULIC	MANIFOLD	Red	White
PORTABLE	HPU	Red	Green

(1) Nominal limit of 18 letters, numerals and spaces.

(2) Nominal limit of 17 letters, numerals and spaces.

NAMEPLATES			
Legend		Color Code	
First Line (1)	Second Line (2)	Lettering	Background

*Where equipment is mounted on roofs or where exposed to the public view, such as in lobby or office areas, the color will be selected by the Engineer.

**The legend on these nameplates also includes the appropriate six-digit numeral and letter designation for such equipment and structures as specified by the Operation and Maintenance Manual.

1.06 Quality Assurance

A. The interceptor gate systems shall be furnished by one single Equipment Manufacturer. This requires the Equipment Manufacturer to be responsible for the development, design, fabrication, assembly, delivery and proper sustained manual operation of all system equipment in order to achieve gate performance as specified herein, but does not require that all system equipment and accessories be the products of one single manufacturer. The interceptor gate system equipment shall be manufactured by Walz and Krenzer, Inc., located in Oxford, Connecticut.

B. Fabricator and their fabrication/assembly facilities shall be ISO 9001 certified.

C. Equipment Manufacturer shall submit a Quality Control/Quality Assurance Plan as described in Article 1.07.T, incorporating the manufacturer's quality control process, materials, and requirements for the fabrication/assembly of all interceptor gate components to be supplied herein.

D. The system shall be designed, furnished, and installed to achieve the conditions of service specified in Article 1.05 herein.

E. The entity performing the Work of this Section shall have a minimum of 10 years of experience in the fabrication/assembly of watertight gates involving complexities similar to those required under this Contract and shall employ labor and supervisory personnel experienced in this type of work.

F. The Equipment Manufacturer may use the services of a fabrication facility not owned by the Equipment Manufacturer, then the Equipment Manufacturer shall demonstrate by submitting to the Engineer, documentation that the Fabricator has completed at least four previous successful fabrications of similar or higher degree of complexity.

G. The Equipment Manufacturer shall qualify welding processes and welding operators in accordance with the AWS Welding Code (AWS D1.6) and shall provide certification that welders to be employed in the Work have satisfactorily passed AWS qualification tests. Written welding procedures demonstrating compliance with AWS requirements shall be submitted to the Engineer. The Equipment Manufacturer shall maintain a welder's certification list including the level of experience and years of experience of each welder.

Welding shall be inspected and tested by the Equipment Manufacturer in accordance with AWS standards, and as follows

All welds shall be visually inspected by an AWS-certified welding inspector.

All full penetration welds shall be non-destructively tested by radiographic or ultrasonic methods in accordance with AWS standards, as approved by the Engineer. Fillet welds shall be non-destructively tested by magnetic particle or dye penetrant methods, as approved by the Engineer. Thirty percent (30%) of all fillet and partial penetration welds shall be tested by a non-destructive method as directed by the Engineer. If, in the opinion of the Engineer, this testing discloses 10% or more of unacceptable welds, the percentage of welds required to be tested may be increased, as deemed necessary by the Engineer, up to 100% and without additional compensation therefore. If, in the opinion of the Engineer, the testing consistently discloses acceptable welds, the percentage of welds tested may be reduced by the Engineer to 15%.

Unless otherwise indicated, all fillet welds shall be a combination of continuous exterior wells, double sided and interior staggered welds as required to prevent excess distortion. All butt welds shall be full penetration welds. Any defects found shall be corrected in accordance with AWS rules.

The Equipment Manufacturer shall employ non-destructive testing (NDT) personnel that are AWS certified and meet SNT-TC-1A requirements. All welding shall be subject to NDT inspection by the Engineer.

The welding of the structural members to the front plate of the interceptor gate panel shall be inspected prior to back plate welding.

H. The Equipment Manufacturer shall prepare a finite element analysis (FEA) of the interceptor gate panel and torsion tube, simulating the different load cases as specified herein. Analyses shall be prepared for the following cases:

Case No.	**Applied Load**	**Operating Scenario**	**Deflection Limit[2] (Maximum)**	**Stress Limit[3]**
1	Full hydrostatic load[1]	1) Gate closed and dogged 2) Cylinder not energized	0.15 inches	50% of material yield strength
2	Ten feet of unseating head above the invert of the gate	1) Gate nearly fully closed 2) Cylinder energized	0.15 inches	50% of material yield strength
3	No hydrostatic load	1) Gate closing 2) Obstruction[4] between panel and frame at 3 o'clock position	0.25 to 1.0 inches[6]	50% of material yield strength

Case No.	Applied Load	Operating Scenario	Deflection Limit[2] (Maximum)	Stress Limit[3]
4	No hydrostatic load	1) Gate closing 2) Obstruction between panel and frame at 6 o'clock position	0.25 to 0.75 inches[6]	50% of material yield strength
5	No hydrostatic load	1) Gate closing 2) Obstruction between panel and frame at 9 o'clock position	0.25 inches	50% of material yield strength
6	No hydrostatic load	1) Gate opening 2) Obstruction between panel and bench at 6 o'clock position	0.25 inches	50% of material yield strength
7	No hydrostatic load	1) Gate opening 2) Obstruction between panel and bench at 9 o'clock position	0.25 inches	50% of material yield strength

Table Notes:

1. 45 feet of water pressure in unseating direction on gate panel surface measured to the invert of the gate.
2. Deflection limit for obstruction scenarios shall be allowed to exceed the defined limit in areas within 12 inches of the obstruction.
3. for ASTM A240 316L Stainless Steel; stress limit shall not exceed 18,000 psi, except for local stresses within 12" of the obstruction for cases 3 through 7.
4. obstruction shall be a solid brick with approximate dimensions 8" long by 4" wide by 2" thick.
5. The 3 o'clock position is defined as the position closest to the interceptor gate torsion tube.
6. The gate shall be permitted to deflect up to 1.0 inch (for Case 3) and up to 0.75 inches (for Case 4) at the 9 o'clock position and shall decrease proportionally across the width of the gate linearly from 9 to 3 o'clock. Deflections greater than 0.25 inches are permitted within 12 inches of the obstruction.
7. FEA criteria shall be simulated under the system hydraulic operating pressure, minimum of 1,500 psi.

I. The acceptance of products prior to the bid date does not relieve the Equipment Manufacturer of the responsibility regarding the performance or ability to meet the requirements of the Contract Documents.

J. The Engineer may perform quality assurance audits for all tests. The Equipment Manufacturer shall supply equipment and personnel, at no additional cost to the City, to assist in the performance of the quality assurance audits.

K. The Equipment Manufacturer shall maintain a quality control program to assure that all fabrications conform to the requirements of the Specifications. The quality control program shall conform to the requirements of this Section for all inspection and testing.

L. Fabrication shop inspections shall be made by the City's representatives. At minimum inspections at the following fabrication shops, gate units, hydraulic units, and control panel should be accounted for. In addition, visits to Alden Laboratories for the quarter scale testing will be undertaken The Contractor shall give ample notice to the Engineer prior to the beginning of any fabrication work so that inspection may be provided. The Contractor shall furnish all facilities for the inspection of materials and workmanship in the shop, and the inspectors shall be allowed free access to the necessary parts of the works. Inspectors shall have the authority to reject any materials or work which does not meet the requirements of these Specifications.

M. The Engineer will perform quality assurance audits to ensure quality workmanship. These audits will include, but not be limited to, visual inspections, ultrasonic, radiographic, magnetic particle or dye penetrant testing of the welding and cutting performed in the fabrication shop. The Equipment Manufacturer shall notify the Engineer 45 days prior to the start of fabrication.

N. Materials will not be accepted which cannot be identified with appropriate certificates of conformance and certified material test reports. Test reports for material tests and analyses shall be identified with specific lots and items prior to fabrication.

O. All Quality Control/Assurance documents shall be maintained in an electronic database by the Equipment Manufacturer.

P. Prior to delivery of the interceptor gates, the Equipment Manufacturer shall complete shop testing of the gates as outlined in Article 1.15.

1.07 Submittals

A. The Equipment Manufacturer shall submit a proof of design quarter-scale model shop test procedure for approval by the Engineer prior to start of the test. Within 60 days after the test a report on the test shall be submitted to the Engineer for approval. Both the test procedure and report shall be in accordance with Article 1.15, herein.

B. A Compliance, Deviations, and Exceptions (CD&E) letter. If the shop drawings are submitted without this CD&E letter, the submittal will be rejected. The letter shall include all comments, deviations and exceptions taken to the Drawings and Specifications by the Contractor AND Equipment Manufacturer/Supplier. This letter shall include a copy of this specification section. In the left margin beside each and every paragraph/item, a letter "C", "D", or "E" shall be typed or written in. The letter "C" shall be for full compliance with the requirement. The letter "D" shall be for a deviation from the requirement. The letter "E" shall be for taking exception to a requirement. Any requirements with the letter "D" or "E" beside them shall be provided with a full typewritten explanation of the deviation/exception. Handwritten explanation of the deviations/exceptions is not acceptable. The CD&E letter shall also address deviations, and exceptions taken to each Drawing related to this Specification Section.

C. The Equipment Manufacturer shall submit to the Engineer complete manufacturer's descriptive information for all equipment, instrumentation, and components in the Equipment Manufacturer's Scope of Supply for the Engineer's approval prior to Contractor's purchase of equipment. The Equipment Manufacturer is to provide three hard-copies and three thumb drives/CDs containing all submittal information organized by component, clearly marking options, models, materials, etc. The Equipment Manufacturer's Project Submittal shall contain the following:

Interceptor Gate System installation drawings, detailing unit dimensions of each component, materials, weights, locations of lifting lugs/points, and anchor bolt locations.

Interceptor Gate Chamber mechanical layout drawings, detailing installation of the gates, hydraulic cylinders, anchor plates, hydraulic connection assemblies, and seal design and materials for proof of concept testing. Drawings will detail information in plan and elevation/section views and include details as necessary to completely describe the installation requirements.

Plan view equipment and instrument drawings showing the location of all components provided by the Interceptor Gate System Manufacturer. Locations and installation details are to be coordinated with the Contractor to avoid installation conflicts and ensure that the Interceptor Gate System successfully performs as specified.

Manufacturer's literature for all equipment in the manufacturer's scope of supply. Literature will include (as applicable):

a. Equipment catalog data

b. Pump curves

c. Materials of construction

d. Shop drawings:

1) Shop drawings shall be submitted as a complete package for each interceptor gate system.

2) Shop drawings shall show all dimensional, geometric, functional, sizes and locations of anchors, and operational information.

3) Shop drawings shall include layouts and details showing the type of steel for each member, sizes of members, connections, cuts, camber, cope reinforcing, bolts, welds and other pertinent data.

4) Shop Drawings shall include electrical and mechanical diagrams/schematics and details of all components with associated signed/sealed computations verifying that the design meets the performance requirements, including electrical and hydraulic process diagrams. Shop drawings shall include hydraulic piping, tubing, hoses, their specifications (including, but not limited to, sizes, materials, joints, and restraint requirements) and installation details. The diagrams/schematics shall include a complete bill of materials

which indicate the limits of Equipment Manufacturer supplied components.

5) A separate shop drawing shall be submitted showing the installation tolerances of the gate including installation of all related components and anchorages.

6) Materials shall not be ordered, fabricated, or delivered before the shop drawings have been approved by the Engineer.

e. Arrangement and Erection Drawings of the gates, operators, and control equipment.

f. Minimum, maximum, and design duty points (flow rates and pressures/TDH)

g. Unit performance and efficiency data

h. Motor horsepower, current draw and voltage

i. Complete wiring and control diagrams which show the point of connection for the power supply and control system

j. Technical descriptive data for each equipment item in the system showing model number(s), sizes, capacities, weights, horsepower, motor and voltage information, and similar type information. Catalog cuts are acceptable if they contain the necessary information.

k. All project-specific installation data for use by the Contractor.

D. Where manufacturers' standard literature is submitted, it shall be clearly marked to indicate which features are to be furnished under this contract. This information includes, but is not limited to, dimensions, pressure ratings, manufacturer, models, ranges, installation details, motor horsepower, power supply voltage, wiring information, control wiring, duty cycles, installation/connection details, torque rating, actuation times, duty cycle, and materials of construction.

E. Process and Instrumentation Diagrams (P&IDs) showing all equipment and instrumentation which will be controlled by the Interceptor Gate System manufacturer's control system, including components provided by others. P&IDs will differentiate which components are supplied by the Manufacturer. Unless otherwise directed by the Engineer, the Equipment Manufacturer is responsible for establishing the tagging scheme for the P&IDs. Tagging scheme will assign a unique tag to all components and their associated I/O. Tagging scheme will organize components by subsystem and train.

F. Scaled plan of the chambers and buildings with location dimensions for all equipment to be installed. Establish point(s) of reference and dimension the location of all equipment from these point(s).

G. Complete design calculations for all Equipment Manufacturer provided equipment. These calculations must include structural computations for stresses and deflections using finite element analysis (FEA) in accordance with Article 1.06 simulating the different load cases as specified herein, forces on interceptor gate chambers resulting from gate operations, and calculations of anchor bolts and other attachments to

concrete structures, bearing pressures, and computations for sizing of custom fabricated hydraulic actuating system components, including but not limited to, cylinders and accumulators.

H. The Equipment Manufacturer shall submit shop test procedures for each interceptor gate component in accordance with Article 1.15.B, herein.

I. The Equipment Manufacturer shall submit full-scale shop test procedure and report in accordance with Article 1.15.C, herein.

J. Field wiring diagram for each motor operated piece of equipment and valve and all primary element transmitters.

K. Control panel drawings, detailing the interior and exterior layouts, components, panel dimensions, panel wiring schematics, and panel materials of construction and NEMA rating. Provide catalog cuts for every electrical device mounted inside and on the face of the control panel such as: breakers, relays, fuse blocks, power supplies, switches, terminal blocks, buttons, switches, pilot lights, programmable logic controller, operator interfaces, etc. Provide System Control Panel heat load calculations for sizing of heater and cooling equipment within the panel in accordance with the operating conditions as specified in Article 1.05.G, herein.

L. Legend nameplate details for control panel switches, lights and panel mounted equipment.

M. Programmable logic controller and OIT information including:

List of operator field adjustable set points/control points.

List of alarm conditions annunciated through the operator interface.

Color screen shots of each graphic display of the operator interface with remarks to describe the color changing sequence.

N. Storage, handling and installation instructions.

O. List of spare parts and miscellaneous equipment to be provided under this Section.

P. System and Equipment Warranty Certificate prepared, signed and notarized in accordance with Article 1.10 herein.

Q. Manufacturer Start-up Report (MSR).

R. Installation Manual

The Interceptor Gate System Manufacturer shall furnish the Engineer approved Installation and Operations Manual at least 2 weeks prior to the delivery of the equipment on site. The Installation Manual will include suppliers' and manufacturer's manuals and drawings detailing dimensions, installation tolerances, locations, wiring information, and any other information necessary to convey the correct assembly and installation of the Interceptor Gate System components provided by the Manufacturer. In addition to installation documents, the Installation Manual shall include requirements for the Mechanical Inspection and a schedule of events for the System Commissioning. The Manufacturer is to provide three hard-copies and three CDs containing all information organized by component.

S. Operation and Maintenance Manual(s) (O & M) for interceptor gates and gate operating system shall be submitted and prepared especially for each installation and shall include all pertinent and legible instructions, preventative maintenance instructions, technical bulletins and other printed matter required to provide accurate and comprehensive information for the safe and proper operation, maintenance and repair of the equipment. O & M Manual requirements include, but are not limited to, the following:

Operations and Maintenance Manual. A complete operations chapter shall be prepared specifically for this project. A draft O & M manual shall be submitted 90 days prior to the date set for start-up.

Complete, detailed written operating instructions for each product or piece of equipment including: equipment function; operating characteristics; limiting conditions; operating instructions for startup, normal and emergency conditions; regulation and control; and shutdown.

Complete, detailed written preventive maintenance instructions, including all information and instructions required to keep a product or piece of equipment properly lubricated, adjusted and maintained so that the item functions economically throughout its full design life. Preventive maintenance instructions include, but are not limited to, the following:

a. A written explanation with illustrations for each preventive maintenance task.

b. Recommended schedule for execution of preventive maintenance tasks.

c. Lubrication charts.

d. Table of alternative lubricants including flushing requirements prior to lubricant replacement.

e. Troubleshooting instructions.

f. List of required maintenance tools and equipment.

g. Nameplate data of each component, year of installation, Contract number and Specification number.

h. Name, address and telephone number of the manufacturer and the manufacturer's local representative(s).

i. Installation instructions.

j. Emergency operating instructions and capabilities.

k. Troubleshooting and corrective maintenance (repair) procedures.

l. Drawings suitable for assembly and disassembly of entire system or unit, and each component, and approved wiring and control diagrams, all as required for operation, maintenance and repair of the equipment supplied. Drawings shall be black on white, clearly legible and no larger than 11" x 17".

m. Parts list with current prices and ordering information.

n. List of recommended spare parts and the recommended number of each.

o. Warranties, guarantees, bonds and service contracts.

p. Long-term and short-term manufacturer's recommended equipment storage procedures.

q. Written explanations of all safety considerations relating to operation and maintenance procedures.

r. Copy of all approved shop drawings.

s. Catalogs, diagrams, schematics, drawings, instruction bulletins and manuals marked by underlining, checking, the use of arrows or the obliteration or removal of extraneous data, so as to pertain only to the specific equipment item for which the manual is supplied.

t. Complete electrical schematics and wiring diagrams. Complete wiring between terminal points must be shown.

u. Reference to features and elements of equipment, such as operational limits of time, speed, pressure, temperature, etc. shall be clear, complete and compatible with authoritative published engineering reference documents. All functional components, electrical systems, equipment, etc. shall be shown on diagrams and discussed in the text so as to identify their proper system relationship. Operation, service, trouble-shooting, checkout and in-line and bench repair procedures, identifying specific system characteristics of the equipment shall be provided. The information shall include recommended procedures and frequencies for preventive maintenance such as inspection, adjustment, lubrication, calibration and cleaning.

v. Equipment parts shall be identified by manufacturer's part number and located with relation to other components of the equipment utilizing "exploded" type drawings for clarity, if required. Complete parts lists shall be included, which indicate the part number, the part description, applicable serial and model numbers, current unit prices and the name, address and telephone number of the nearest equipment manufacturer's representative and nearest service and spare parts warehouse. Complete instructions for the ordering of all replaceable parts shall be noted in this section of a Manual. Recommendations as to spare parts and spare inventory levels shall be made. Where pertinent, lead time and shelf life values and preservation, packaging and labeling methods shall be also recommended.

All copyrighted material used in the Manual or in any operation required in the performance of the Contract will be preceded by the Contractor obtaining the copyright holder's written permission on behalf of City to use such material in perpetuity.

T. In addition to the Operations and Maintenance Manual, prepare a condensed, pocket size, Operator Field Guide containing the salient points of Interceptor Gate System operations. The guide shall be commercially bound, printed, and laminated. Ten (10)

final copies shall be provided. The guide shall be protected with front and back heavy stock covers. As a minimum the guide shall contain the following:

List Interceptor Gate System equipment part and model numbers

“What if” type troubleshooting guide

Emergency and department telephone numbers that the City may contact for assistance with the Interceptor Gate System equipment, including after normal working hours, weekends, and federal holidays.

Control system description

Maintenance operations descriptions.

U. Quality Assurance/Quality Control (QA/QC) Plan shall be submitted for the services and equipment supplied under this contract, and shall incorporate the manufacturer’s quality control process, materials, and requirements. The plan shall consist of, at a minimum, the following quality elements:

Roles & Responsibilities, communication protocols

Management and Production Inspections

Off-Site Supplier Quality

Vendor Capability Inspections

Notification & Coordination with the City

Inspection Instructions

Traceability

Pre-Activity Meeting

Initial Inspections

Witness Shop Testing & QA Inspections

V. A Lesson Plan shall be submitted for the instructional presentations as specified in Article 1.20 herein.

W. Field visit reports as specified in Article 1.18, herein.

1.08 Delivery, Storage, and Handling

A. The Equipment Manufacturer shall have all equipment crated/packed for transport by Contractor in accordance with Contractor’s instructions and in compliance with all Federal, State and Local Laws.

B. The Equipment Manufacturer shall package and mark the packaging to enable the Contractor to keep inventory of like-sized component hardware and to properly store hardware during the installation process.

C. Hardware such as bolts, washers, nuts, etc. of each type shall be furnished in adequate quantities to install the system plus 10% extra to account for lost or defective hardware.

D. The Equipment Manufacturer shall provide a master parts list, packaged in a plastic protector page holder. Provide three (3) copies of the master parts list, each laminated and in a plastic holder.

E. The installation drawings shall be folded and shipped in a plastic project case with the title box showing. The project case shall be commercially purchased and be suitably sized to store all installation drawings. Provide a duplicate set of installation drawings (in a project case also) with the equipment shipment for use by the City.

F. Resilient interceptor gate seals shall be packaged for shipping separately from the interceptor gate panels.

1.09 Spare Parts, Special Tools, and Supplies

A. The Contractor shall furnish and deliver to the Engineer, at that part of the site and at such time as the Engineer may direct, spare parts listed in the table in Section 40 61 22 , Article 1.09, E.

B. The following spare parts for items furnished for the project shall be provided as a minimum.

For each Interceptor and Bypass Slide Gate and Components:

a. Two (2) sets of O-rings, seals and gaskets for every size and type

b. One (1) complete, full circumference interceptor gate seal assembly

c. One (1) complete bypass gate seal

d. One (1) directional control valve for every size and type

e. One (1) torsion tube bearing for every size and type

f. 50 gallons of EcoSafe EHC FR-46 oil in un-opened original container

g. 10 feet of hydraulic hose and 10 connectors of every size and type in accordance with hydraulic hose listed in Article 1.11.B.

h. Dogging pin access cover and all required gaskets and fasteners.

C. Spare parts shall be delivered to the Manhattan Pump Station, unless a different location is determined by the City.

1.10 Special Warranty Provisions / Guarantee Periods

A. The Equipment Manufacturer's warranty for gate functionality shall be provided for total coverage period of five (5) years from the City's Substantial Completion.

B. The interceptor gate system Equipment Manufacturer shall furnish an Equipment Warranty Certificate typed on company letterhead and signed by an authorized officer of the company. A notary public in the state in which the company headquarters is located shall witness the signing of the certificate. The certificate shall be submitted, verbatim and without exception, as follows:

"Providing the system equipment is installed per installation instructions and is being operated in accordance with the written operating instructions provided by Walz & Krenzer (Equipment Manufacturer), they shall warranty and provide replacement components for the replacement

and/or repair of the Interceptor Gate Systems and components under warranty for a period of 5 years from the date of Substantial Completion. The warranty shall not be prorated.

In addition, the Equipment Manufacturer shall guarantee all mechanical and electrical components of the system to be free from defects in design, materials and workmanship for a period of five (5) years commencing on the date from Substantial Completion.

During the guarantee period, if any part or equipment component is defective or fails to perform when operating at design conditions and if the equipment has been installed and is being operated and maintained in accordance with the written instructions provided, then the Equipment Manufacturer shall provide a replacement part.

The replacement or repair of parts normally consumed in service shall include pilot light bulbs, hydraulic oil and lubricants. These parts only shall be considered as part of routine maintenance and upkeep and shall not be considered eligible for exchange free of charge under this Warranty."

PRODUCTS

1.11 COMPONENTS SUPPLIED TO OR SELECTED BY THE EQUIPMENT Manufacturer (WALZ & KRENZER)

A. The brand name products specified were chosen on the basis of past performance, compatibility and testing and constitute a standard for quality and performance for the specific purpose for which they are intended. Products other than that specified as follows will only be considered if requested by the Equipment Manufacturer along with any other supporting information requested by the engineer. The engineer shall have the final right to approve any changes.:

The named products constitute the "minimum" components required. If a different model of equipment is necessary, the Equipment Manufacturer shall prepare and submit to the City three (3) copies of the "Evaluation Documentation" as listed below. The information shall be in a form that is neat, clear, precise, legible and computer drafted and prepared so as to allow the City to evaluate the proposed equipment. The "Evaluation Documentation" shall be provided to the City prior to shop drawing submission, and shall include:

a. A Process Diagram showing Equipment size, pipe names, flow directions, pipe and valve sizes, and location of every system component.

b. Instrumentation Diagram showing loop names and loop descriptions.

c. System calculations showing unit sizing, loading and hydraulic flow rates.

d. Descriptive technical information for the proposed product(s) highlighted to show the differences between the proposed unit(s) and the specified unit(s). Descriptive technical information shall include model numbers, type, sizes, weights, performance data, and materials of construction. Include all major electrical devices mounted inside the System Control Panel.

e. List of facilities showing facility name, active contact name and telephone number, years in service, design conditions and parameters and owner's name and current telephone number.

f. Equipment cuts showing dimensional data for all system components.

The Equipment Manufacturer shall state if they are in compliance with the requirements specified in each and all Sections of the Specifications.

B. The following *Table 1 – Interceptor Gate Component Schedule* lists equipment, components, and/or each of their approved equals, that shall be furnished under this Contract. The sizes and capacities listed under the Special Requirements column may vary based on final detail design:

SECTION 40 05 59.01 – INTERCEPTOR GATES

SPECIAL WORKS – IG/PC

TABLE 1 - INTERCEPTOR GATE COMPONENT SCHEDULE					
SYSTEM ABBREVIATIONS - HPU: Hydraulic Power Unit, AS: Accumulator Stand, SS: Solenoid Stand, SCP: SYSTEM CONTROL PANEL					
MATERIAL ABBREVIATIONS - CS: Carbon Steel, S.S.: Stainless Steel, CI: Cast Iron, DI: Ductile Iron					
Item No.	Component	Manufacturer	Model/Series/ Part	Primary Material	Special Requirements
HYDRAULIC SYSTEM COMPONENTS (HPU, AS, SS, Portable HPU)					
1a	HPU Reservoir Tank	LDI Industries	V258 L-Shaped, or approved equal.	(1) Tank: CS (2) Seals: Buna N (3) Sight Gage: Aluminum (4) Fill Cap: Zinc Plated w/nylon strainer (5) Coating: Exterior and Interior Factory Primed and Finish Coat	See Article 1.05.G For hydraulic oil, see Article 1.12.H.
1b	HPU Reservoir Heater	Watlow	BGS732J6W-34	(1) Plug: Steel (2) Enclosure: Moisture Resistant (NEMA 4)	(1) 120/240V AC
1c	HPU Reservoir Tank Drain Valve	Parker	V500P Series		
1d	HPU Suction Strainer	FLO-EZY	10-1-100	(1) CS	(1) Flow: 10 gpm (2) NPT: 1 (3) Mesh: 100 (.005-in)
2	HPU Motor	TBD	TBD	(1) Frame and End Brackets: CI (2) Conduit Box: CI (3) T-Drains: SS	(1) Voltage: 460 V, 3 phase, 60 Hz (2) Totally enclosed fan-cooled (3) RPM Range: 1701-1800 (4) NEMA Premium Efficiency

SECTION 40 05 59.01 – INTERCEPTOR GATES

SPECIAL WORKS – IG/PC

TABLE 1 - INTERCEPTOR GATE COMPONENT SCHEDULE					
SYSTEM ABBREVIATIONS - HPU: Hydraulic Power Unit, AS: Accumulator Stand, SS: Solenoid Stand, SCP: SYSTEM CONTROL PANEL					
MATERIAL ABBREVIATIONS - CS: Carbon Steel, S.S.: Stainless Steel, CI: Cast Iron, DI: Ductile Iron					
Item No.	Component	Manufacturer	Model/Series/ Part	Primary Material	Special Requirements
				(4) Fan: Bronze alloy	(5) 20 HP
3	HPU Pump	Parker	F11 Series	(1) Seals: Nitrile	Size: TBD
4	HPU Motor/Pump Adaptor	BSF	PD1-Series	CI	Size: TBD
5	HPU Filter (pressure side)	Parker	WPF3 941037Q	(1) Seal: FC (2) 10 QE Microglass	Filter size: 20-micron
6	HPU Filter (return side)	Parker	KLT series	(1) Seal: FC (2) Media: 10 QE Microglass	Filter size: 10-micron
7	HPU High Pressure Ball Valve	Parker	BVHP16SSK1N A	(1) Valve Body: CS (2) Stem Material: SS (3) Ball Seal: Delrin (4) Shaft Seal: Nitrile	(1) Max Pressure: 6000 PSI (2) Thread: SAE (3) Style: 2 Way Shut Off, Locking Handle (4) Port Size: 16
8	HPU Low Pressure Ball Valve	Parker	BVAL24NSS2N C	(1) Valve Body: CS (2) Stem Material: SS (3) Ball Seal: PTFE (4) Shaft Seal: Nitrile	(1) Max Pressure: 6000 PSI (2) Thread: NPT (3) Style: 2 Way Low Pressure (4) Port Size: 1-1/2
9	HPU High Flow Solenoid	Parker	GS series	CS	(1) 2 Way Poppet Type Valve (2) 17mm Diameter
10	HPU Low Flow solenoid Valve	Parker		CS	
11	HPU Check Valve	Parker	Standard	CS	Cavity size: C16-3

SECTION 40 05 59.01 – INTERCEPTOR GATES

SPECIAL WORKS – IG/PC

TABLE 1 - INTERCEPTOR GATE COMPONENT SCHEDULE					
SYSTEM ABBREVIATIONS - HPU: Hydraulic Power Unit, AS: Accumulator Stand, SS: Solenoid Stand, SCP: SYSTEM CONTROL PANEL					
MATERIAL ABBREVIATIONS - CS: Carbon Steel, S.S.: Stainless Steel, CI: Cast Iron, DI: Ductile Iron					
Item No.	Component	Manufacturer	Model/Series/ Part	Primary Material	Special Requirements
12	HPU Needle Valve	Parker	NVH series	CS	(1) Coarse needle (2) Cavity size: C10-2
13	HPU Relief Valve	Parker	A series	CS	(1) Screw adjust (2) Cavity size: C10-3S
14	HPU Solenoid Valve	Parker	DSH series	CS	(1) 2 way spool type (2) Cavity size: C08-2
15	HPU Remote Relief Valve	Parker	RDH042S50	CS	(1) Screw adjust (2) Cavity size: C04-2
16	HPU Disabled	Parker	BV	CS	Port size 1-1/2
17	Piston Accumulator	Parker	A series	HSS	5,000 psi max
18	Gas Bottle	Parker	GB series	S.S.	5,000 psi max
19a	Snubbers	Dynamic	PDD-4	CS	Rated Pressure: 10,000 psi
19b	Vacuum Gauge	Parker	936909		
19c	Return Filter Differential Gauge	Parker	936912		
19d	Pressure Gauges	UCI	LSS2512 Series	304 S.S.	Connection: 1/4"
20	Cartridge Valve	Parker	C series	CS	Nominal size: NG25
21	Pressure Reducing Valve	Parker	PRS6 series		
22	Ball Valve	Parker	BVHP series	CS	High pressure & Pad Lockable

SECTION 40 05 59.01 – INTERCEPTOR GATES

SPECIAL WORKS – IG/PC

TABLE 1 - INTERCEPTOR GATE COMPONENT SCHEDULE					
SYSTEM ABBREVIATIONS - HPU: Hydraulic Power Unit, AS: Accumulator Stand, SS: Solenoid Stand, SCP: SYSTEM CONTROL PANEL					
MATERIAL ABBREVIATIONS - CS: Carbon Steel, S.S.: Stainless Steel, CI: Cast Iron, DI: Ductile Iron					
Item No.	Component	Manufacturer	Model/Series/ Part	Primary Material	Special Requirements
23	Ball Valve	Parker	BVHP24ESS1N A	CS	Pad Lockable
24	Ball Valve	Parker	BV series	CS	(1) Pad Lockable - Tank Line (2) Port Size: 8
25	Relief Valve	Parker	A02B2TN-8T	CS	
26	Needle Valves	Parker	N series	CS	(1) Needle and snubber for Gauges (2) Port Size: 1/8
27	Rupture Disc	Parker	S16		(1) Circuit selector (2) Port size: SAE-16
28	Interceptor Panel Solenoids	Parker	GS Series	CS	
29	Solenoid Valve	Parker	GS series	CS	Cavity size: C08-2
30	Solenoid Valve	Parker	D1VW series	CS	(1) 2 Position detent, 24 VDC (2) Cavity size: C08-2
31	Check Valve	Parker	C series	S.S.	
32	HPU, AS, SS Manifolds	Daman	DO3HP044S	DI (D4512)	(1) Max Pressure: 5000 psi (2) 4-inch Valve Spacing (3) SAE Port Threads

SECTION 40 05 59.01 – INTERCEPTOR GATES

SPECIAL WORKS – IG/PC

TABLE 1 - INTERCEPTOR GATE COMPONENT SCHEDULE					
SYSTEM ABBREVIATIONS - HPU: Hydraulic Power Unit, AS: Accumulator Stand, SS: Solenoid Stand, SCP: SYSTEM CONTROL PANEL					
MATERIAL ABBREVIATIONS - CS: Carbon Steel, S.S.: Stainless Steel, CI: Cast Iron, DI: Ductile Iron					
Item No.	Component	Manufacturer	Model/Series/ Part	Primary Material	Special Requirements
32a	Hydraulic Tubing (HPU)		1-1/4”	316L S.S.	Minimum Thickness: 0.120-inch
32b	Hydraulic Piping (HPU)		1-1/2”	A106	Schedule 40 GRB
32c	Hydraulic Piping (HPU)		1”	A106	Schedule 160 GRB
32d	Hydraulic Piping (HPU)		2”	A106	Schedule 160 GRB
32e	Hydraulic Hoses	Parker	471ST X 36”	Nitrile-based synthetic rubber with high-tensile steel wire reinforcement and polymeric cover	Both ends are straight and long face seal female (JS) female swivel; long face seal male (JO) male ends
32f	Hydraulic Piping (AS)		1”	A106	Schedule 160 GRB
32g	Hydraulic Piping (AS)		1-1/2”	A106	Schedule 160 GRB

SECTION 40 05 59.01 – INTERCEPTOR GATES

SPECIAL WORKS – IG/PC

TABLE 1 - INTERCEPTOR GATE COMPONENT SCHEDULE					
SYSTEM ABBREVIATIONS - HPU: Hydraulic Power Unit, AS: Accumulator Stand, SS: Solenoid Stand, SCP: SYSTEM CONTROL PANEL					
MATERIAL ABBREVIATIONS - CS: Carbon Steel, S.S.: Stainless Steel, CI: Cast Iron, DI: Ductile Iron					
Item No.	Component	Manufacturer	Model/Series/ Part	Primary Material	Special Requirements
32h	Hydraulic Piping (AS)		2”	A106	Schedule 160 GRB
32i	Hydraulic Tubing (AS)		¾”	316L S.S.	Minimum thickness: 0.065-inch
32j	Hydraulic Tubing		1”	316 S.S.	Minimum thickness: 0.083-inch
32k	Quick Disconnects	Parker	8-10F5OLO-SS; 12F5OLO-SS; 16F5OLO-SS	S.S.	8 Face Seal to SAE 10; 12 Face Seal to SAE 12; 16 Face Seal to SAE 16
33	Portable HPU	Godwin	GHPU-10		See Article 1.05.L
SYSTEM CONTROL PANEL COMPONENTS					
33	Control Panel Enclosure	Saginaw	SCE Series	316 S.S.	10 NEMA 4X (2) See Article 1.05B
34	Back Panel	Saginaw	SCE-Series		
35	Power Supply	SOLA	Hevi Duty SDN Series		

SECTION 40 05 59.01 – INTERCEPTOR GATES

SPECIAL WORKS – IG/PC

TABLE 1 - INTERCEPTOR GATE COMPONENT SCHEDULE					
SYSTEM ABBREVIATIONS - HPU: Hydraulic Power Unit, AS: Accumulator Stand, SS: Solenoid Stand, SCP: SYSTEM CONTROL PANEL					
MATERIAL ABBREVIATIONS - CS: Carbon Steel, S.S.: Stainless Steel, CI: Cast Iron, DI: Ductile Iron					
Item No.	Component	Manufacturer	Model/Series/ Part	Primary Material	Special Requirements
36	Line Reactor	Allen Bradley	1321-3R8-C		
37	Overload Relay	Allen Bradley	193-EEDB		
38	Motor Starter	Allen Bradley	309-BOD-930		
39	Operator Interface Terminal (OIT)	Allen Bradley	PanelView Plus 7Standard 10”		See Article 1.05B
41	Ground Bar	Cutler Hammer	GBK10		
42	Control Transformer	Hammond	SP3000MGMJ		
43	Uninterruptible Power Supply (UPS)	Phoenix Contact	2866239		(1) Maintenance Bypass Switch (2) See Article 1.05B
44	PLC Interface Card				
45	Backup Battery	Phoenix Contact	2320322		
46	Intrinsically safe relays	Square D			See 1.05B
48	Pilot Lamp	Square D	90001SKT38L Series		(1) Amber (2) Red (3) Green (4) White
49	Duplex GFCI Receptacle	Hubbell	HDRUBGFI15		

SECTION 40 05 59.01 – INTERCEPTOR GATES

SPECIAL WORKS – IG/PC

TABLE 1 - INTERCEPTOR GATE COMPONENT SCHEDULE					
SYSTEM ABBREVIATIONS - HPU: Hydraulic Power Unit, AS: Accumulator Stand, SS: Solenoid Stand, SCP: SYSTEM CONTROL PANEL					
MATERIAL ABBREVIATIONS - CS: Carbon Steel, S.S.: Stainless Steel, CI: Cast Iron, DI: Ductile Iron					
Item No.	Component	Manufacturer	Model/Series/ Part	Primary Material	Special Requirements
50	3 Pole Relay (3PDT)	IDEC	RH4B-UL-120VAC		Minimum 10 A, 120VAC
51	Relay Base	IDEC	SH4B-05		
52	2 Pole Relay (DPDT)	IDEC	RH2B-UL-120VAC		Minimum 10 A, 120VAC
53	Surge Suppressor	Phoenix Contact			See Article 1.05B
54	Ethernet Switch	N-Tron	709FX-SC		
55	Operating Handle	Square D	9422A2		
56	Circuit Breaker	ABB	S201		
58	Fusible Terminal Block	ABB	1SNA11566		
59	Terminal Block	ABB	1SNA11		
60	Pushbutton Latching	Square D	90001SKR1BH13		
61	Selector Switch	Square D	90001 SKS Series		(1) Four Position
62	Central Processing Unit	Allen Bradley	Compact Logix 1769-L3X		See Article 1.05B
63	PLC Power Supply	Allen Bradley	Compact Logix 1769-PAX		See Article 1.05B

SECTION 40 05 59.01 – INTERCEPTOR GATES

SPECIAL WORKS – IG/PC

TABLE 1 - INTERCEPTOR GATE COMPONENT SCHEDULE					
SYSTEM ABBREVIATIONS - HPU: Hydraulic Power Unit, AS: Accumulator Stand, SS: Solenoid Stand, SCP: SYSTEM CONTROL PANEL					
MATERIAL ABBREVIATIONS - CS: Carbon Steel, S.S.: Stainless Steel, CI: Cast Iron, DI: Ductile Iron					
Item No.	Component	Manufacturer	Model/Series/ Part	Primary Material	Special Requirements
64	Analog Input Module	Allen Bradley	1769-IF		See 1.05B
65	Analog Output Module	Allen Bradley	1769-OF		See 1.05B
66	Digital Input Card	Allen Bradley	1769-IA		See 1.05B
67a	Digital Output Card	Allen Bradley	1769-OA		See 1.05B
67b	Communication Module	Allen Bradley	1769-OW		See 1.05B
67c	Ethernet/IP to Modbus TCP	Prosoft			See 1.05B
68	Wire Duct	IBOCO	TI-2240G		
69	DIN Rail	IBOCO	Omega 3AF		
70	Cable	Norstat	CG1N02000C01 5-N		
71	Coils	Parker	CCP series		1/2"
72	Pressure Sensor Cable	Parker	CB-M12-5P-2M		24 VDC Coil
73	Pressure Sensors	Parker	SCPSD-5000P-1725		
74	Low Oil Level	Madison Co.	MT5600 series	316 S.S.	1/4" fittings
75	High Oil Temperature	Madison Co.	MT5600 series	316 S.S.	1/4" fittings
76	Emergency low oil level	Madison Co.	M5600	316 S.S.	(1) Analog Pressure Sensor (4-20 mAmp) (2) 1/4" fittings
77	HPU - Pressure Switch	CCS	604P		

SECTION 40 05 59.01 – INTERCEPTOR GATES

SPECIAL WORKS – IG/PC

TABLE 1 - INTERCEPTOR GATE COMPONENT SCHEDULE					
SYSTEM ABBREVIATIONS - HPU: Hydraulic Power Unit, AS: Accumulator Stand, SS: Solenoid Stand, SCP: SYSTEM CONTROL PANEL					
MATERIAL ABBREVIATIONS - CS: Carbon Steel, S.S.: Stainless Steel, CI: Cast Iron, DI: Ductile Iron					
Item No.	Component	Manufacturer	Model/Series/ Part	Primary Material	Special Requirements
78	Junction Box	Hoffman	TBD	316 S.S.	
79	Proximity Switches	Topworx	Model 11 Series		(1) Long range (2) 1 1/2" square x 4 9/16"
80	HPU Filter Warning	Parker	WPF series	Fluorocarbon seal	
81	HPU Flow Alarm	Lake Monitor	M4A6HJ20		Indicates flow from HPU - verifies flow
84	Wall Mounting Module	Edwards Signaling	105BM		

1.12 Materials / Equipment

A. Unless noted otherwise, all steel construction shall be of welded plate design. All welds shall be indicated by standard welding symbols as defined by AWS. Structurally critical steel assemblies and welds to be submitted and approved by the Engineer. Shop drawings shall show the size, length, and type of each weld.

B. Unless otherwise indicated, the Interceptor Gates and Bypass Slide Gates shall be constructed of 316L stainless steel. All stainless-steel surfaces shall be precleaned, descaled, passivated and inspected before, during and after fabrication in accordance with the applicable sections of ASTM A380 and as detailed in the procedures to be submitted to the Engineer for approval prior to start of work. Degreasing and passivation of stainless-steel articles shall be conducted as the last step after fabrication.

C. Interceptor gates shall be horizontal swing type gates. Each gate panel shall be constructed with front and back plates welded to reinforcing structural members to limit gate deflection as outlined in the FEA cases in Article 1.06.H.

Material: Fabricate the gate panel, frame, and all components of Type 316L stainless steel meeting the requirements of ASTM A276, unless otherwise specified.

Seals: Provide segmented EPDM seal mounted to the gate panel as specified in Article 1.05.C.2, herein. The seal shall have a ASTM D2240 Shore durometer hardness no less than 40.

Hydraulic component mounting for gate:

a. All mounting brackets, structural supports, hardware, and other accessories necessary for a complete installation of each hydraulic component requiring mounting shall be supplied by the Equipment Manufacturer.

b. All mounting plates shall be fabricated of Type 316L stainless steel.

c. All welding shall be a continuous Type 316L stainless steel weld on both sides of the plates.

Actuator: The interceptor gate shall be actuated by a hydraulic cylinder as described in Article 1.05.E. herein.

Actuator Support: Provide an actuator support as described in Article 1.05.E.2. herein.

The hydraulic cylinders and any component external to the cylinder cover, including the cylinder rod, shall be constructed of stainless steel.

Gate Pivoting Components: The pivoting portions of all movable assemblies, including but not limited to, torsion tube, dogs, and cylinders shall include appropriate thrust bearings and/or bearings made of the materials providing the longest service in the interceptor environment and stainless steel pins. The bearing design shall be appropriate for the environment.

Upper and lower torsion tube bearings shall be sleeve and thrust type self-lubricating, maintenance free bearings constructed of 316 stainless steel lined with low friction, high load capacity liner. The liner shall be Karon® by KAMATICS of Bloomfield, CT.

D. For the hydraulic pumps, provide a drip pan that shall be made of minimum 10 Gauge 316 Stainless steel plate and 1-1/2" (minimum) deep.

E. All hardware, including bolts, washers and elastic stop nuts shall be Type 316 stainless steel. If elastic stop nuts are not provided, double nutting will be required. All other bolts that are not encased in concrete shall be type 316 stainless steel with Nitronic 60 stainless steel nuts and locknuts.

F. Bypass gates shall be closed channel type 316L stainless steel slide gates. Each gate disc shall be constructed of flat stainless-steel plate with a thickness as required, reinforced with structural or formed members of stainless steel to limit gate deflection to the lesser of 1/720 of gate width at the maximum design head or 1/16 inch.

Material: Fabricate the gate disc, reinforcing members, frame and guide of Type 316L stainless steel meeting the requirements of ASTM A276.

Seals: Provide self-adjusting seals of UHMW with compression cords. Bulb seals requiring pressure pads requiring adjustment are not allowed. Plastic or polyethylene is not acceptable as a seal material. All seals shall be replaceable without dewatering the gate.

Gasket: Provide a gasket for mounting the gate to the square flange of the spool piece. The gasket shall be nitrile and have a minimum thickness of 1/8-inch.

All mounting brackets, structural supports and other accessories necessary for a complete installation of each hydraulic component requiring mounting shall be supplied by the manufacturer.

The mounting bracket shall be fabricated of Type 316L stainless steel.

All welding shall be a continuous Type 316L stainless steel weld on both sides of the plates and shall have predrilled holes to match the holes on the existing base.

The brackets shall be secured to the base with Type 316 stainless steel through bolts, double nuts and oversized washers (two double nuts and two washers per bolt assembly). The brackets shall be supplied by the Equipment Manufacturer.

All fasteners and hardware shall be stainless steel ASTM A276, Type 316 and ASTM A320, B8 or B8F

Bypass gate actuator and lifting stem:

a. Actuator: Base the loading of operating mechanisms on the following: the minimum vertical load is fifty percent (50%) of the force, in pounds, on the gate resulting from the operating head acting on the horizontal centerline of the gate multiplied by the effective area of the gate, plus the weight of the slide or disc and stem. The operating head is the distance from the centerline of the slide gate to the maximum water level of the channel within which the gate is located

b. Actuator Support: Provide an actuator supporting bracket secured to the wall capable of supporting the actuator and all appurtenances. Construct the bracket of 316L stainless steel with structural members as required.

c. Stem Design: Design stems for the maximum forces of the operator and the weight and service of the gate. Limit the length over radius of gyration (l/r) ratio of the stem to 200. The minimum stem diameter shall be 1.50 inches. Provide stems meeting the following applicable standards:

1) Bronze ASTM B 98

2) Stainless Steel ASTM A 276, Type 304, 304L or Type 316 ASTM A 564, Type 630 ASTM A 582, Type 303

d. Stem Guides: Stem guides, where required to limit the unsupported stem length, shall be polymer or bronze bushed.

G. Paint

Unless otherwise specified, prior to painting, all non-stainless steel surfaces shall be free of dirt, grease and rust and shall be blast cleaned in accordance with SSPC-SP-10, “Near White Blast cleaning”. Blast cleaning shall be accomplished using grit. Provide a sharp angular uniform pattern with a profile height of 2-3 mils.

Coatings shall be applied in accordance with manufacturer’s instructions. Care shall be taken to ensure that the proper coating systems and thicknesses are applied to all welding and the edges of all shapes.

Do not paint corrosion-resistant stainless steel surfaces, gaskets, hinges, threads, cylinder rods, bushings or label plates

All severe duty motors shall have all internal and external surfaces pretreated, primed and painted. External surfaces shall be pretreated so the surface is clean and free of contaminants. After pretreatment, the external surface shall be primed with an oxide primer and then spray painted with a minimum of .003 inch thick epoxy polyamide and semi-gloss coating that is chemical, solvent, salt water, and acid resistant. Internal Surfaces shall primed with an oxide primer and then painted with an epoxy paint. Machined joints and threaded parts shall be coated with rust inhibiting compound.

All other equipment shall have internal surfaces pretreated and primed in accordance with the manufacturer’s standard treatment.

H. Hydraulic Oil

Hydraulic oil shall be EcoSafe EHC FR-46, no other oil is acceptable. A required volume of oil is to be provided by the Equipment Manufacturer to fill the entire system.

Hydraulic oil shall have a minimum service life of 25 years under normal operating conditions.

I. Hydraulic Connections

All hydraulic tubing, piping and valves shall be Type 316L stainless steel. Fittings shall be selected for minimum leakage, with SAE O-ring port connections and brazed face seal O-ring tube connections.

1.13 Fabrication / Assembling / Finishes

A. All work shall be carried out in accordance with the standards typically used in the design and fabrication of watertight doors and hatches for marine use, including but not

limited to standards referenced in Article 1.04 herein. All workmanship shall be of a standard of quality consistent to ensure that the requisite tightness is obtained, exposed surfaces are smooth, and proper fit and alignment are accomplished.

B. Properly mark and match-mark materials to expedite erection and minimize field handling of materials.

C. For fabrication of all steel work, use only new and unused materials which are smooth and free of surface blemishes including pitting, seam marks, rolled trade names and roughness. If needed, remove such blemishes by grinding, or by welding and grinding prior to cleaning, treating and application of surface finishes.

D. Unless otherwise noted, dimensional tolerances for the fabrication of the interceptor gates shall be as follows:

The straightness of the Interceptor Gate panel shall not vary more than +/- 1/8 inch on the sealing edges in any overall length and not more than +/- 1/16 inch in any six foot length on the sealing and mounting surfaces only

Warpage or twist in the Interceptor Gate frame shall not be more than +/- 1/8 inch on the sealing edges.

E. Dogging pins shall have a tapered design that will increase the seal compression when engaged. The dogging pins shall have an anti-rotation component such that the tapered wedge will engage as intended.

F. The finished product shall be rigid, neat in appearance, and free from all defects, warps, and buckles. All exposed joints and corners shall be well rounded.

G. Lifting hooks shall be provided to facilitate handling of hydraulic cylinders, interceptor gate panel, and bypass gate in either a vertical or horizontal position. Lifting hooks, baseplates and companion flanges shall be surface machined for 2-1/2 inches on the outer outside diameter area and sides of the baseplate and cover flanges.

1.14 Controls

A. System Control Panel Functional Description

A System Control Panel shall be provided for each interceptor gate system. The control operations description provided herein is for the north interceptor gate system; however, the functional description applies to both the north and south interceptor gates. See Contract Drawings for specific numbering of components and equipment for each gate. The control panel face shall contain the following controls, indicators, switches, and devices and be arranged in groups, banks, rows or columns to provide a logical separation of function and shall be designed and fabricated to accomplish the functions specified. System Control Panel OIT display shall be provided in addition to status pilot lights in the event that it is out of service and the operator is forced to operate the system without the benefit of the graphic display. A full system input/output list is appended at the end of this Specification.

The following shall be provided as part of the System Control Panel:

a. White pilot light centered at the top of the panel showing that the panel is energized - “POWER ON”.

b. “LOCAL-PLC-OFF-REMOTE” (LPOR) selector switch to control the mode of operation of the interceptor gate and dogging pins.

c. “OPEN-STOP-CLOSE” selector switch for interceptor gate.

d. “EXTEND-RETRACT” selector switches for upper and lower dogging pins.

e. “LOCAL-PLC-OFF-REMOTE” (LPOR) selector switch to control the mode of operation of the bypass gate.

f. “OPEN-STOP-CLOSE” selector switch for bypass gate.

g. Status Indicating Lights for the following:

1) Interceptor Gate “REMOTE”, “LOCAL”, “OPEN”, “CLOSED”, “IN TRANSIT”, “MID POSITION”, “FAULT”, “LOWER DOGGING PIN EXTEND/RETRACT”, “UPPER DOGGING PIN EXTEND/RETRACT”, “LOWER DOGGING PIN EXTENDED”, “LOWER DOGGING PIN RETRACTED”, “UPPER DOGGING PIN EXTENDED”, “UPPER DOGGING PIN RETRACTED”, “FAIL TO OPEN”, “FAIL TO CLOSE”, “FAIL TO REACH MID POSITION”, “

2) Bypass Gate “REMOTE”, “LOCAL”, “OPEN”, “CLOSED”, “IN TRANSIT”, “FAULT”

h. Provide alarm lights for the following:

1) “HIGH OIL LEVEL” and “LOW OIL LEVEL” “EMERGENCY LOW LEVEL” for oil tank

2) “HIGH SYSTEM PRESSURE” and “LOW SYSTEM PRESSURE”

3) “SYSTEM FAULT”

4) “PLC FAULT”

i. The following alarm conditions shall be annunciated through the operator interface terminal:

1) Each HPU control valve as follows: “VALVE FAILED TO OPEN”, “VALVE FAILED TO CLOSE”.

2) Each HPU pump as follows: “PUMP FAILED TO START”, “PUMP FAILED TO STOP”, “MOTOR OVER TEMPERATURE”, “SEAL LEAK”.

3) If a pump has failed to establish pressurized flow within an adjustable time period, a pump failure will be assumed and indicated at the appropriate PUMP FAIL light. The affected pump will be automatically shut down and prevented from operating until the condition is cleared by pressing a PUMP RESET pushbutton mounted on the control panel.

4) Other alarms as required by the Interceptor Gate System manufacturer

"TROUBLE", "ALARM", or "FAULT" pilot lights shall be push-to-test, incandescent type with amber color cap.

"PLC FAULT" pilot light shall be push-to-test, incandescent type with blue color cap.

"RUN", "OPEN", "ON", "HAND", or "START" pilot lights shall be push-to-test, incandescent type with red color cap.

"IN TRANSIT" pilot light shall be push-to-test incandescent type with blinking red color cap

"OFF", "CLOSE" or "STOP" pilot lights shall be push-to-test, incandescent type with green color cap.

Selector switches shall be maintained position type with properly labeled legend plate.

B. North Interceptor Gate Control Operations (typical for south interceptor gate)

Local Manual Control

a. When the LPOR (LOCAL-PLC-OFF-REMOTE) selector switch on SCP is in the LOCAL position:

1) Relay logic controls within SCP shall control IG-006.

2) Operator shall be able to open-stop-close IG-006, reset alarms, extend-retract dogging pins using SCP mounted selector switches and push buttons.

b. When the LPOR (LOCAL-PLC-OFF-REMOTE) selector switch on SCP is in the PLC position,

1) PLC-005 within SCP shall control IG-006.

2) Operator shall be able to open-stop-close IG-006, reset alarms, extend-retract dogging pins using soft switches on SCP mounted OIT-005.

c. When the LPOR (LOCAL-PLC-OFF-REMOTE) selector switch on SCP is in the OFF position, IG-006 shall not operate.

d. When the LPOR (LOCAL-PLC-OFF-REMOTE) selector switch on SCP is in the REMOTE position,

1) relay logic controls within SCP shall control IG-006 as described below.

Remote Manual Control

e. From Manhattan Pump Station - North Gate Control Panel (MPS-NGCP)

1) When the LR (LOCAL-REMOTE) selector switch on the MPS-NGCP is in the LOCAL position, operator shall be able to open-stop-close IG-006, reset alarms, extend-retract dogging pins

using MPS-NGCP mounted selector switches and push buttons.

2) When the LR selector switch on the MPS-NGCP is in the REMOTE position, IG-006 shall be operated from MPS-SCADA system as described below.

f. From MPS-SCADA

1) When MPS-SCADA system has control of the IG-006, the READY soft indicator shall turn on. Operator shall be able to open-stop-close IG-006, reset alarms, extend-retract dogging pins using soft switches within MPS-SCADA system.

When in LOCAL, PLC, or REMOTE mode, relay logic controls in the SCP shall

g. send IG-006 open and close command signals (relay dry contacts) to the Flushing System – Local Control Panel (FS-LCP, provided by Contractor) to initiate flushing cycle.

h. initiate a flushing cycle delay timer (field adjustable, initial setting 10 minutes) and allow IG-006 to open/close as commanded, only after flushing cycle delay timer expires.

i. turn on flushing cycle delay timer active (on) indicator light.

j. not initiate flushing cycle delay timer when powered only by UPS (utility and generator power is not available) and allow IG-006 to open/close as commanded.

k. not accept OPEN or CLOSE commands if a previous OPEN or CLOSE command is active. A STOP command must first be issued before a new OPEN or CLOSE command is given.

When in LOCAL, PLC, or REMOTE mode, relay logic controls in the SCP shall generate fail-to-open, fail-to-close and fail-to-reach-midpoint alarms when IG-006 fails to reach the respective commanded positions after user adjustable alarm delay timer relays are provided within the SCP and shall function as described below:

l. When on electrical power provided by utility or emergency generator, the alarm delay timers start after the flushing delay timer expires. The respective alarm delay timers shall have initial settings of 17 minutes for midpoint timer and 32 minutes for full open or close position;

m. When on UPS power, the alarm delay timers start immediately after an open or close command is given. The respective alarm delay timers shall have initial settings of 25 minutes for midpoint timer and 47 minutes for full open or close position;

n. Reset all alarm delay timers once the commanded gate position is reached or a STOP command is selected.

o. If any of the fail-to-open, fail-to-close or fail-to-reach-midpoint alarms are active, the flushing delay timer shall not be initiated and the gate shall operate as commanded immediately.

When in LOCAL, PLC, or REMOTE mode, relay logic controls in the SCP shall extend the dogging pins only after IG-006 closed status is confirmed.

When in LOCAL, PLC, or REMOTE mode, when the gate is fully closed and an open command is selected, relay logic controls in the SCP shall relieve pressure on the dogging pins to facilitate dogging pin retraction prior to gate opening.

When in LOCAL, PLC, or REMOTE mode, relay logic controls in the SCP shall not open and/or close IG-006

p. before dogging pins RETRACTED status is confirmed.

q. before flushing cycle delay timer expires (field adjustable, initial setting 10 minutes).

C. Bypass Gate Control Operations

When in LOCAL, PLC, or REMOTE mode System Control Panel (SCP) shall control BG-005 as described below.

a. Local Manual Control

1) When the LPOR (LOCAL-PLC-OFF-REMOTE) selector switch on SCP is in the LOCAL position,

a) Relay logic controls within SCP shall control BG-005.

b) Operator shall be able to open-stop-close BG-005, reset alarms using SCP mounted selector switches and push buttons.

2) When the LPOR (LOCAL-PLC-OFF-REMOTE) selector switch on SCP is in the PLC position,

a) PLC-005 within SCP shall control BG-005.

b) Operator shall be able to open-stop-close BG-005, reset alarms using soft switches on SCP mounted OIT-005.

3) When the LPOR (LOCAL-PLC-OFF-REMOTE) selector switch on SCP is in the OFF position, BG-005 shall not operate.

4) When the LPOR (LOCAL-PLC-OFF-REMOTE) selector switch on SCP is in the REMOTE position,

a) relay logic controls within SCP shall control BG-005 as described below.

b. Remote Manual Control

1) From MPS-NGCP (North Gate Control Panel)

a) When the LR selector switch on the MPS-NGCP is in the LOCAL position, operator shall be able to open-stop-close BG-005, reset alarms using MPS-NGCP mounted selector switches and push buttons.

b) When the LR selector switch on the MPS-NGCP is in the REMOTE position, BG-005 shall be operated from MPS-SCADA system as described below.

2) Remote Manual Control from MPS-SCADA

a) When MPS-SCADA system has control of the BG-005, the READY soft indicator shall turn on. Operator shall be able to open-stop-close BG-005, reset alarms using soft switches within MPS-SCADA system.

3) When in LOCAL, PLC, or REMOTE mode, relay logic controls in the SCP shall

a) send BG-005 open and close command signals (relay dry contacts) to FS-LCP to initiate flushing cycle.

b) initiate a flushing cycle delay timer (field adjustable, initial setting 10 minutes) and allow BG-005 to open/close as commanded, only after flushing cycle delay timer expires.

c) turn on flushing cycle delay timer active (on) indicator light.

d) not initiate flushing cycle delay timer when powered only by UPS (utility and generator power is not available) and allow BG-005 to open/close as commanded.

1.15 Source Quality Control / Shop Tests

A. Interceptor Gate Proof of Design Witness Testing

Provide a minimum one-quarter scale proof of design model of the Interceptor Gate, incorporated within a concrete structure and simulated interceptor pipe which simulates the positional and functional movements of major gate components.

A detailed proof of design quarter-scale model shop test procedure shall be submitted to the Engineer for approval prior to fabrication of the quarter-scale model and testing. The submittal shall include:

a. Drawings showing dimensions, details and materials of the quarter-scale model and testing structure as described herein.

b. Calculations showing determination of scaled model dimensions, performance parameters and acceptance criteria, including acceptable scaled maximum leakage rates with the seal in place and when the seal is removed.

c. Detailed testing procedures inclusive of the following three phases:

1) Operational testing:

a) Operation under normal design dry weather flow (30 to 40 mgd), opening and closing.

b) Operation under wet flow (400 mgd), opening and closing.

c) Operation with maximum static head on both sides of the gate (close against maximum unseating head of 45 feet and open against maximum seating head of 12 feet).

2) Debris transport assessment under scaled conditions:

a) Using simulated debris of a defined size and type approved by the Engineer and City.

b) Assessment of flushing water system (40 to 80 feet/sec nozzle velocity).

3) Effect of debris (approved defined size and type) on gate leakage rate.

Shop testing of the model interceptor gate equipment shall be witnessed by the Engineer and the City and shall include witnessing five separate test arrangements at the testing facility. **Fabrication of the full-scale interceptor gate and associated components shall not proceed prior to testing and approval of the proof of design interceptor gate model**.

The Equipment Manufacturer shall collaborate with Alden Labs, to design the scaled interceptor gate door and structure, as well as the instrumentation and control equipment for the scaled model.

d. The testing laboratory will design and construct the scaled gate chamber structure from provided drawings and input from the Equipment Manufacturer. Strain gages shall be provided for the tests.

e. The scaled gate chamber shall include at least four viewing windows to facilitate test observations.

The interceptor gate components to be fabricated shall consist of suitably sized, scaled versions of the Interceptor Gate frame with concrete-embedded frame extension, dogging pins, torsion tube, hydraulic cylinder, and mounting hardware. The scaled model shall include all fittings, tubing, valves, mechanical equipment including a manual hydraulic power unit and accumulator assembly, and controls which are not necessarily to scale but replicate key features of the design to demonstrate the functional performance.

Model materials shall be metal but are not necessarily required to be corrosion resistant or stainless steel for the purpose of the scaled model shop witness testing provided that accumulated scale does not interfere with the performance and demonstration of the model.

The interceptor gate seal shall be designed and tested as follows:

f. The seal shall be mechanically restrained within a circumferential channel consisting of side gasket retainers welded to the interceptor gate upstream panel. The channel shall be designed to protect the seal from damage by debris carried by sewage flow.

g. The seal shall be secured within the circumferential channel of the panel with a bolted, segmented gasket retainer plate to allow replacement of individual sections of the seal.

h. The seal shall be designed to accommodate fabrication tolerances in accordance with Article 1.13.D. herein and deflections in accordance with Article 1.06.H. herein while allowing the gate to meet the specified leakage rate.

i. A full circumferential compression stop shall be provided to prevent over compression of the seal by the leading edge of the gate frame when the gate closes. The compression stop shall be designed to provide additional sealing action.

Quarter scale proof of design witness testing shall be under the same design conditions as the full scale production units. The assembly shall have electrical controls and hydraulics, although the hydraulic components need not be scaled where it is infeasible. The tests shall be conducted at Alden Labs or one of their affiliated sites under design hydraulic head and flowing conditions. The test shall demonstrate at minimum the following:

j. General concept and configuration.

k. Interaction and movement of critical assembled components.

l. Modeled performance using 1:4 Froude length scale for open channel flow and a maximum design flow rate of 400 mgd.

m. Gate deflection under full (not scaled) load of 45 feet of head.

n. Seals:

1) Performance of gate with resilient seal as designed and with resilient seal removed

2) Performance of gate with metal seal.

o. Gate to frame closure fit

p. Leakage rate shall be measured and recorded to confirm the validity of the seal design and material. If the measured leakage rate exceeds the acceptable leakage rate, the Equipment Manufacturer shall make any adjustments necessary to achieve the acceptable leakage rate, including changing the material and seal type.

q. Operation and response to simulated flow and obstruction between gate panel and frame.

r. Hydraulic pressure and accumulator storage capacity to open and close the gate in accordance with the system design parameters.

s. Electrical controls and programming as required to conduct scale model testing and simulate full-scale operation as described in Article 1.14 Controls.

t. At least three additional repeat tests shall be performed beyond the number of tests required by the Equipment Manufacturer. All test results shall be reported and provided.

Upon successful completion of the quarter-scale test, a report documenting all results, findings, modifications and conclusions shall be certified by the Equipment Manufacturer's Head of QA/QC Department and Officer of the Company and submitted to the Engineer for approval prior to proceeding with full scale production. The report shall include, at a minimum, the following measurements:

u. Interceptor inlet and outlet gauge pressures

v. Total flow

w. Seat leakage

x. Flushing wand flow rate

y. Inlet water temperature

z. Force measurements

10. Upon successful completion of the full-scale test described in paragraph c below, the quarter-scale proof of design model and all components fabricated for the quarter-scale test will remain the property of the Contractor.

B. Shop Witness Testing of full-scale system components at the component manufacturing facilities. Shop witness testing of full-scale system components shall be witnessed by the Engineer and the City. Components shall not be shipped to final gate assembly facility until the shop test results have been approved by the Engineer.

A detailed shop test procedure in accordance with the respective manufacturer's testing protocols shall be submitted to the Engineer for approval for each component. At a minimum, the following shall be tested:

a. Interceptor gate panel internal air tightness

b. HPU pumps and motors

c. Hydraulic assembly with accumulators

d. Bypass gates

e. Portable HPU

f. Control panels

C. Full-Scale Operational Interceptor Gate, Bypass Gate and HPU Unit Witness Shop Test

Upon completion of interceptor gate manufacturing, a detailed shop test procedure shall be submitted to the Engineer for approval. The submittal shall include, but not be limited to the following:

a. Drawings showing dimensions and details of the testing stand as described herein.

b. Detailed testing procedures.

c. Current instrument calibration certificates used for testing

Shop testing of each Interceptor Gate integrated with the respective System Control Panel and hydraulic system shall be witnessed by the Engineer and the City.

d. A carbon steel interceptor gate frame template for each interceptor gate shall be fabricated for the purposes of witness shop testing. The stainless steel interceptor gate frames shall be 3D laser scanned for the fabrication of the carbon steel interceptor gate frames.

1) The carbon steel interceptor gate frame shall be fabricated based upon 3D laser scan data and as-built drawings of the installed condition, obtained from the Contractor, as defined in Section 40 05 59.02 Part 1.16.C. The carbon steel interceptor gate frame shall replicate actual field-installed dimensions, and include any discrepancies in trueness, plumbness, and other dimensional discrepancies.

e. During the shop witness testing, the interceptor gate assembly, including gate frame, panel, and cylinder, shall be supported by a testing stand. The testing stand shall allow complete testing as described herein.

f. The Interceptor Gate System shall be tested by the Equipment Manufacturer and witnessed by the Engineer, as specified. Testing shall demonstrate, but not be limited to the following:

1) Full open/close movement cycle of the gate when powered by:

a) The hydraulic system manufactured for this gate with electrical power.

b) Accumulators in the absence of electrical power.

c) Portable HPU.

2) Panel and frame fit in the closed position within dimensional tolerances.

3) Dogging pin operates as specified.

4) Leakage through the Interceptor Gate panel and frame.

a) Leakage rate measured at the design unseating head shall not exceed the specified leakage rate with the seal in place.

b) Leakage rate with no seal

c) Leakage rates at three additional unseating heads, lower than the specified head, shall be measured and recorded for the development of a calibration curve to be used for field testing.

5) Gate deflection under design head within design parameters.

6) System Control Panel full functionality and system operating parameters.

7) Bypass gate integration with the System Control Panel and hydraulic system.

8) Verification of pressure switch settings

9) Verification of relief valve settings

10) Verification of pump and motor operation and performance

11) Verification of speed of travel of gate

12) Verification of proximity switches

13) Check for hydraulic fluid leaks

14) Check line pressure at various points including the pump output and downstream of the pressure switches within design parameters

15) Interceptor Gate operation via System Control Panel

16) Interceptor gate system response to an obstruction as defined in Article 1.06.H Cases 3, 4, and 5 within the design loading criteria.

Any adjustments, repairs, and modifications required to meet the acceptance criteria shall be performed by the Equipment Manufacturer at no cost to the City.

Upon successful completion of the full-scale test for each interceptor gate, a report documenting all results, findings, modifications and conclusions shall be certified by the Equipment Manufacturer's Head of QA/QC Department and Officer of the Company and submitted to the Engineer for approval prior to shipment of the gate assembly to the project site.

1.16 PROGRAMMING SOFTWARE

A. The PLC programming and configuration software shall be the manufacturer's latest, full-featured version, Windows-based, and shall be fully compliant with IEC 61131-3 standards. The software package shall consist of all programming, configuration, and documentation software needed to place the control and information system in satisfactory operation. The software shall allow on-line and off-line program development and documentation. PLC programming software shall include documentation on optical media.

B. The OIT shall be configured to display all PLC I/O, setpoints, and parameters. All equipment failures shall be alarmed. PLC I/O values and operator-entered setpoints shall be displayed with associated units and service descriptions. Menus shall be provided to navigate between screens of different equipment items. Displays shall be arranged in a hierarchical structure with displays for specific equipment items grouped together. Additional functionality shall be as specified elsewhere in this Division.

C. A minimum of one copy of the PLC, OIT programming software shall be purchased by the instrumentation subcontractor and registered to the City.

D. All necessary configuration and programming software including but not limited to the customized project specific application programs shall be provided on optical media and turned over to the City.

EXECUTION

1.17 Examination / Preparation

A. Not Used.

1.18 Installation

A. Equipment Manufacturer shall provide a qualified representative to support installation of each interceptor gate system and components in accordance with the manufacturer's recommendations and approved Shop Drawings and as required herein.

B. Equipment Manufacturer shall provide ten (10) days per Interceptor Gate System, totaling up to four (4) trips for providing installation instruction to the Contractor and to troubleshoot any issues that may occur in the field for each interceptor gate. The Contractor shall be responsible for all costs associated with having the manufacturer present should the Contractor require more days of installation instruction. The Manufacturer’s field representative shall report to the site coinciding with the Contractor’s work force.

The Equipment Manufacturer’s representative shall oversee the measurement of installation tolerances performed by the Contractor.

C. Equipment Manufacturer shall submit a report directly to both the Engineer and Contractor of each visit to the site. Reports shall provide complete information on time, schedule, tasks performed, persons contacted, problems corrected, test results, training, instruction and all other pertinent information.

1.19 Field Testing / Quality Control

A. Equipment Manufacturer shall provide a qualified representative to support field testing of interceptor gate systems. Field tests are defined in the Execution Part of Section 40 05 59.02 – Interceptor Gate Installation.

B. Equipment Manufacturer shall provide a total of (10) days of field support for each interceptor gate system once each has been mechanically installed for the following:

Inspect the completed installation

Direct the installer to field calibrate the equipment

Adjust limit switch positions and control valves settings

Make all necessary mechanical adjustments

Assist the Contractor in preparation of placing PLC systems into permanent, fault free operation

Supervise Contractor during field testing as defined in the Execution Part of Section 40 05 59.02 – Interceptor Gate Installatio.

C. Equipment Manufacturer shall provide 40 hours per Interceptor Gate System of re-programming time for each supplied PLC program within the first 6 months once each system is completely functional and placed into operation to make any program changes as required by the City.

D. Equipment Manufacturer shall submit a report of each visit to the site to the Engineer and the Contractor. Reports shall provide complete information on time, schedule, tasks performed, persons contacted, problems corrected, test results, training, instruction and all other pertinent information.

E. Upon successful completion of the field test for each interceptor gate, a report documenting all results, findings, adjustments, repairs, modifications and conclusions shall be prepared by the Contractor and certified by the Equipment Manufacturer's Head of QA/QC Department and Officer of the Company and shall be submitted to the Engineer for final approval.

1.20 Startup / Demonstration

A. Equipment Manufacturer shall provide a qualified representative to support startup and training for each interceptor gate system in accordance with the manufacturer's recommendations and as required herein.

B. Equipment Manufacturer shall provide a total of five (5) days per interceptor gate system, totaling up to two (2) trips (five days per trip, one trip per gate) to provide operations instruction to the City. The manufacturer shall present a complete review of the Operations and Maintenance Manual pertaining to the interceptor gate systems at least 30 days prior to this time. Up to six (6) classroom type instruction presentations shall be presented on the Interceptor Gate Systems Operation and Controls and Maintenance. In addition, the representative shall instruct the operating personnel in calibration and troubleshooting of the equipment. The Operations and Maintenance Manual shall include Energy Control Procedure (ECP) drawings for electrical and mechanical equipment.

1.21 Adjusting / Protection / Cleanup

C. Not used.

SECTION 40 05 59.01 – INTERCEPTOR GATES

SPECIAL WORKS – IG/PC

APPENDIX A – INPUT / OUTPUT LIST

TAG	SERVICE DESCRIPTION	FUNCTION	PLC	I/O TYPE	P&ID	NOTES
FS-004	FLUSH ACTIVE / FLOW OK	FLOW	NORTH TP	DI	I-03	NORTH CONTROL BUILDING - FS-LCP
YN-004	FLUSH CYCLE DELAY TIMER ACTIVE (ON)	TIMER	NORTH TP	DI	I-03	NORTH CONTROL BUILDING - SCP
HS-005B	BG-005 (BYPASS GATE) & IG-006 (INTERCEPTOR GATE) ALARM RESET COMMAND	ALARM RESET	NORTH TP	DO	I-03	NORTH CONTROL BUILDING - SCP
HS-005A	BG-005 (BYPASS GATE) OPEN COMMAND	OPEN	NORTH TP	DO	I-03	NORTH CONTROL BUILDING - SCP
HS-005AA	BG-005 (BYPASS GATE) CLOSE COMMAND	CLOSE	NORTH TP	DO	I-03	NORTH CONTROL BUILDING - SCP
YN-005	BG-005 (BYPASS GATE) IN REMOTE (SCP)	SCP IN REMOTE	NORTH TP	DI	I-03	NORTH CONTROL BUILDING - SCP
YN-005AC	BG-005 (BYPASS GATE) IN LOCAL (SCP)	SCP IN LOCAL	NORTH TP	DI	I-03	NORTH CONTROL BUILDING - SCP
YN-005AD	BG-005 (BYPASS GATE) IN PLC (SCP)	SCP IN PLC MODE	NORTH TP	DI	I-03	NORTH CONTROL BUILDING - SCP
YN-005AE	BG-005 (BYPASS GATE) IN REMOTE (NGCP)	NGCP IN REMOTE	NORTH TP	DO	I-03	NORTH CONTROL BUILDING - SCP
YN-005AF	BG-005 (BYPASS GATE) IN LOCAL (NGCP)	NGCP IN LOCAL	NORTH TP	DO	I-03	NORTH CONTROL BUILDING - SCP
YN-005A	BG-005 (BYPASS GATE) OPEN INDICATION	OPENED	NORTH TP	DI	I-03	NORTH CONTROL BUILDING - SCP

SECTION 40 05 59.01 – INTERCEPTOR GATES

SPECIAL WORKS – IG/PC

TAG	SERVICE DESCRIPTION	FUNCTION	PLC	I/O TYPE	P&ID	NOTES
YN-005AA	BG-005 (BYPASS GATE) CLOSED INDICATION	CLOSED	NORTH TP	DI	I-03	NORTH CONTROL BUILDING - SCP
YN-005AB	BG-005 (BYPASS GATE) IN TRANSIT	IN TRANSIT	NORTH TP	DI	I-03	NORTH CONTROL BUILDING - SCP
YA-005	BG-005 (BYPASS GATE) FAULT INDICATION	FAULT	NORTH TP	DI	I-03	NORTH CONTROL BUILDING - SCP
HS-006A	IG-006 (INTERCEPTOR GATE) OPEN COMMAND	OPEN	NORTH TP	DO	I-03	NORTH CONTROL BUILDING - SCP
HS-006AA	IG-006 (INTERCEPTOR GATE) CLOSE COMMAND	CLOSE	NORTH TP	DO	I-03	NORTH CONTROL BUILDING - SCP
HS-006B	IG-006 (INTERCEPTOR GATE) LOWER DOGGING PIN EXTEND COMMAND	LOWER PIN EXTEND	NORTH TP	DO	I-03	NORTH CONTROL BUILDING - SCP
HS-006BB	IG-006 (INTERCEPTOR GATE) LOWER DOGGING PIN RETRACT COMMAND	LOWER PIN RETRACT	NORTH TP	DO	I-03	NORTH CONTROL BUILDING - SCP
HS-006C	IG-006 (INTERCEPTOR GATE) UPPER DOGGING PIN EXTEND COMMAND	UPPER PIN EXTEND	NORTH TP	DO	I-03	NORTH CONTROL BUILDING - SCP
HS-006CC	IG-006 (INTERCEPTOR GATE) UPPER DOGGING PIN RETRACT COMMAND	UPPER PIN RETRACT	NORTH TP	DO	I-03	NORTH CONTROL BUILDING - SCP
YN-006	IG-006 (INTERCEPTOR GATE) IN REMOTE (SCP)	SCP IN REMOTE	NORTH TP	DI	I-03	NORTH CONTROL BUILDING - SCP
YN-006AD	IG-006 (INTERCEPTOR GATE) IN LOCAL (SCP)	SCP IN LOCAL	NORTH TP	DI	I-03	NORTH CONTROL BUILDING - SCP
YN-006AE	IG-006 (INTERCEPTOR GATE) IN PLC (SCP)	SCP IN PLC MODE	NORTH TP	DI	I-03	NORTH CONTROL BUILDING - SCP

SECTION 40 05 59.01 – INTERCEPTOR GATES

SPECIAL WORKS – IG/PC

TAG	SERVICE DESCRIPTION	FUNCTION	PLC	I/O TYPE	P&ID	NOTES
YN-006AF	IG-006 (INTERCEPTOR GATE) IN REMOTE (NGCP)	NGCP IN REMOTE	NORTH TP	DO	I-03	NORTH CONTROL BUILDING - SCP
YN-006AG	IG-006 (INTERCEPTOR GATE) IN LOCAL (NGCP)	NGCP IN LOCAL	NORTH TP	DO	I-03	NORTH CONTROL BUILDING - SCP
YN-006A	IG-006 (INTERCEPTOR GATE) OPEN INDICATION	OPENED	NORTH TP	DI	I-03	NORTH CONTROL BUILDING - SCP
YN-006AA	IG-006 (INTERCEPTOR GATE) CLOSED INDICATION	CLOSED	NORTH TP	DI	I-03	NORTH CONTROL BUILDING - SCP
YN-006AB	IG-006 (INTERCEPTOR GATE) IN TRANSIT	IN TRANSIT	NORTH TP	DI	I-03	NORTH CONTROL BUILDING - SCP
YN-006AC	IG-006 (INTERCEPTOR GATE) MID POSITION INDICATION	MID POSITION	NORTH TP	DI	I-03	NORTH CONTROL BUILDING - SCP
YA-006	IG-006 (INTERCEPTOR GATE) FAULT INDICATION	FAULT	NORTH TP	DI	I-03	NORTH CONTROL BUILDING - SCP
YA-006A	IG-006 (INTERCEPTOR GATE) FAIL TO OPEN FAULT INDICATION	FAIL TO OPEN	NORTH TP	DI	I-03	NORTH CONTROL BUILDING - SCP
YA-006AA	IG-006 (INTERCEPTOR GATE) FAIL TO REACH MID POSITION FAULT INDICATION	FAIL TO REACH MID POSITION	NORTH TP	DI	I-03	NORTH CONTROL BUILDING - SCP
YA-006AB	IG-006 (INTERCEPTOR GATE) FAIL TO CLOSE FAULT INDICATION	FAIL TO CLOSE	NORTH TP	DI	I-03	NORTH CONTROL BUILDING - SCP
YN-006B	IG-006 (INTERCEPTOR GATE) LOWER DOGGING PIN EXTENDED	LOWER PIN EXTENDED	NORTH TP	DI	I-03	NORTH CONTROL BUILDING - SCP
YN-006BB	IG-006 (INTERCEPTOR GATE) LOWER DOGGING PIN RETRACTED	LOWER PIN RETRACTED	NORTH TP	DI	I-03	NORTH CONTROL BUILDING - SCP

SECTION 40 05 59.01 – INTERCEPTOR GATES

SPECIAL WORKS – IG/PC

TAG	SERVICE DESCRIPTION	FUNCTION	PLC	I/O TYPE	P&ID	NOTES
YN-006C	IG-006 (INTERCEPTOR GATE) UPPER DOGGING PIN EXTENDED	UPPER PIN EXTENDED	NORTH TP	DI	I-03	NORTH CONTROL BUILDING - SCP
YN-006CC	IG-006 (INTERCEPTOR GATE) UPPER DOGGING PIN RETRACTED	UPPER PIN RETRACTED	NORTH TP	DI	I-03	NORTH CONTROL BUILDING - SCP
YA-007	SCP ON UPS POWER	UPS POWER ON	NORTH TP	DI	I-03	NORTH CONTROL BUILDING - SCP
YA-007	SCP UPS FAULT	UPS FAULT	NORTH TP	DI	I-03	NORTH CONTROL BUILDING - SCP
YA-008	NORTH-TP ON UPS POWER	UPS POWER ON	NORTH TP	DI	I-03	NORTH CONTROL BUILDING - NORTH TP
YA-008A	NORTH-TP UPS FAULT	UPS FAULT	NORTH TP	DI	I-03	NORTH CONTROL BUILDING - NORTH TP
FS-014	FLUSH ACTIVE / FLOW OK	FLOW	SOUTH TP	DI	I-03	SOUTH CONTROL BUILDING - FS-LCP
YN-014	FLUSH CYCLE DELAY TIMER ACTIVE (ON)	TIMER	SOUTH TP	DI	I-03	SOUTH CONTROL BUILDING - SCP
HS-015B	BG-015 (BYPASS GATE) & IG-016 (INTERCEPTOR GATE) ALARM RESET COMMAND	ALARM RESET	SOUTH TP	DO	I-03	SOUTH CONTROL BUILDING - SCP
HS-015A	BG-015 (BYPASS GATE) OPEN COMMAND	OPEN	SOUTH TP	DO	I-03	SOUTH CONTROL BUILDING - SCP
HS-015AA	BG-015 (BYPASS GATE) CLOSE COMMAND	CLOSE	SOUTH TP	DO	I-03	SOUTH CONTROL BUILDING - SCP

SECTION 40 05 59.01 – INTERCEPTOR GATES

SPECIAL WORKS – IG/PC

TAG	SERVICE DESCRIPTION	FUNCTION	PLC	I/O TYPE	P&ID	NOTES
YN-015	BG-015 (BYPASS GATE) IN REMOTE (SCP)	READY / IN REMOTE	SOUTH TP	DI	I-03	SOUTH CONTROL BUILDING - SCP
YN-015AC	BG-015 (BYPASS GATE) IN LOCAL (SCP)	SCP IN LOCAL	SOUTH TP	DI	I-03	SOUTH CONTROL BUILDING - SCP
YN-015AD	BG-015 (BYPASS GATE) IN PLC (SCP)	SCP IN PLC MODE	SOUTH TP	DI	I-03	SOUTH CONTROL BUILDING - SCP
YN-015AE	BG-015 (BYPASS GATE) IN REMOTE (SGCP)	SGCP IN REMOTE	SOUTH TP	DO	I-03	SOUTH CONTROL BUILDING - SCP
YN-015AF	BG-015 (BYPASS GATE) IN LOCAL (SGCP)	SGCP IN LOCAL	SOUTH TP	DO	I-03	SOUTH CONTROL BUILDING - SCP
YN-015A	BG-015 (BYPASS GATE) OPEN INDICATION	OPENED	SOUTH TP	DI	I-03	SOUTH CONTROL BUILDING - SCP
YN-015AA	BG-015 (BYPASS GATE) CLOSED INDICATION	CLOSED	SOUTH TP	DI	I-03	SOUTH CONTROL BUILDING - SCP
YN-015AB	BG-015 (BYPASS GATE) IN TRANSIT	IN TRANSIT	SOUTH TP	DI	I-03	SOUTH CONTROL BUILDING - SCP
YA-015	BG-015 (BYPASS GATE) FAULT INDICATION	FAULT	SOUTH TP	DI	I-03	SOUTH CONTROL BUILDING - SCP
HS-016A	IG-016 (INTERCEPTOR GATE) OPEN COMMAND	OPEN	SOUTH TP	DO	I-03	SOUTH CONTROL BUILDING - SCP
HS-016AA	IG-016 (INTERCEPTOR GATE) CLOSE COMMAND	CLOSE	SOUTH TP	DO	I-03	SOUTH CONTROL BUILDING - SCP
HS-016B	IG-016 (INTERCEPTOR GATE) LOWER DOGGING PIN EXTEND COMMAND	LOWER PIN EXTEND	SOUTH TP	DO	I-03	SOUTH CONTROL BUILDING - SCP

SECTION 40 05 59.01 – INTERCEPTOR GATES

SPECIAL WORKS – IG/PC

TAG	SERVICE DESCRIPTION	FUNCTION	PLC	I/O TYPE	P&ID	NOTES
HS-016C	IG-016 (INTERCEPTOR GATE) LOWER DOGGING PIN RETRACT COMMAND	LOWER PIN RETRACT	SOUTH TP	DO	I-03	SOUTH CONTROL BUILDING - SCP
HS-016C	IG-016 (INTERCEPTOR GATE) UPPER DOGGING PIN EXTEND COMMAND	UPPER PIN EXTEND	SOUTH TP	DO	I-03	NORTH CONTROL BUILDING - SCP
HS-016CC	IG-016 (INTERCEPTOR GATE) UPPERR DOGGING PIN RETRACT COMMAND	UPPER PIN RETRACT	SOUTH TP	DO	I-03	NORTH CONTROL BUILDING - SCP
YN-016	IG-016 (INTERCEPTOR GATE) N REMOTE	SCP IN REMOTE	SOUTH TP	DI	I-03	SOUTH CONTROL BUILDING - SCP
YN-016AD	IG-016 (INTERCEPTOR GATE) IN LOCAL (SCP)	SCP IN LOCAL	SOUTH TP	DI	I-03	SOUTH CONTROL BUILDING - SCP
YN-016AE	IG-016 (INTERCEPTOR GATE) IN PLC (SCP)	SCP IN PLC MODE	SOUTH TP	DI	I-03	SOUTH CONTROL BUILDING - SCP
YN-016AF	IG-016 (INTERCEPTOR GATE) IN REMOTE (SGCP)	SGCP IN REMOTE	SOUTH TP	DO	I-03	SOUTH CONTROL BUILDING - SCP
YN-016AG	IG-016 (INTERCEPTOR GATE) IN LOCAL (SGCP)	SGCP IN LOCAL	SOUTH TP	DO	I-03	SOUTH CONTROL BUILDING - SCP
YN-016A	IG-016 (INTERCEPTOR GATE) OPEN INDICATION	OPENED	SOUTH TP	DI	I-03	SOUTH CONTROL BUILDING - SCP
YN-016AA	IG-016 (INTERCEPTOR GATE) CLOSED INDICATION	CLOSED	SOUTH TP	DI	I-03	SOUTH CONTROL BUILDING - SCP
YN-016AB	IG-016 (INTERCEPTOR GATE) IN TRANSIT	IN TRANSIT	SOUTH TP	DI	I-03	SOUTH CONTROL BUILDING - SCP
YN-016AC	IG-016 (INTERCEPTOR GATE) MID POSITION INDICATION	MID POSITION	SOUTH TP	DI	I-03	SOUTH CONTROL BUILDING - SCP

SECTION 40 05 59.01 – INTERCEPTOR GATES

SPECIAL WORKS – IG/PC

TAG	SERVICE DESCRIPTION	FUNCTION	PLC	I/O TYPE	P&ID	NOTES
YA-016	IG-016 (INTERCEPTOR GATE) FAULT INDICATION	FAULT	SOUTH TP	DI	I-03	SOUTH CONTROL BUILDING - SCP
YA-016A	IG-016 (INTERCEPTOR GATE) FAIL TO OPEN FAULT INDICATION	FAIL TO OPEN	SOUTH TP	DI	I-03	SOUTH CONTROL BUILDING - SCP
YA-016AA	IG-016 (INTERCEPTOR GATE) FAIL TO REACH MID POSITION FAULT INDICATION	FAIL TO REACH MID POSITION	SOUTH TP	DI	I-03	SOUTH CONTROL BUILDING - SCP
YA-016AB	IG-016 (INTERCEPTOR GATE) FAIL TO CLOSE FAULT INDICATION	FAIL TO CLOSE	SOUTH TP	DI	I-03	SOUTH CONTROL BUILDING - SCP
YN-016B	IG-016 (INTERCEPTOR GATE) LOWER DOGGING PIN EXTENDED	LOWER PIN EXTENDED	SOUTH TP	DI	I-03	SOUTH CONTROL BUILDING - SCP
YN-016BB	IG-016 (INTERCEPTOR GATE) LOWER DOGGING PIN RETRACTED	LOWER PIN RETRACTED	SOUTH TP	DI	I-03	SOUTH CONTROL BUILDING - SCP
YN-016C	IG-016 (INTERCEPTOR GATE) UPPER DOGGING PIN EXTENDED	UPPER PIN EXTENDED	SOUTH TP	DI	I-03	SOUTH CONTROL BUILDING - SCP
YN-016CC	IG-016 (INTERCEPTOR GATE) UPPER DOGGING PIN RETRACTED	UPPER PIN RETRACTED	SOUTH TP	DI	I-03	SOUTH CONTROL BUILDING - SCP
YA-017	SCP ON UPS POWER	UPS POWER ON	SOUTH TP	DI	I-03	SOUTH CONTROL BUILDING - SCP
YA-017	SCP UPS FAULT	UPS FAULT	SOUTH TP	DI	I-03	SOUTH CONTROL BUILDING - SCP
YA-018	SOUTH-TP ON UPS POWER	UPS POWER ON	SOUTH TP	DI	I-03	SOUTH CONTROL BUILDING - SOUTH TP
YA-018A	SOUTH-TP UPS FAULT	UPS FAULT	SOUTH TP	DI	I-03	SOUTH CONTROL BUILDING - SOUTH TP

SECTION 40 05 59.01 – INTERCEPTOR GATES

SPECIAL WORKS – IG/PC

TAG	SERVICE DESCRIPTION	FUNCTION	PLC	I/O TYPE	P&ID	NOTES
FS-004	FLUSH ACTIVE / FLOW OK	FLOW	existing MPS TP	DO	I-03	MANHATTAN PUMP STATION - NGCP
YN-004	FLUSH CYCLE DELAY TIMER ACTIVE (ON)	TIMER	existing MPS TP	DO	I-03	MANHATTAN PUMP STATION - NGCP
HS-005B	BG-005 (BYPASS GATE) & IG-006 (INTERCEPTOR GATE) ALARM RESET COMMAND	ALARM RESET	existing MPS TP	DI	I-03	MANHATTAN PUMP STATION - NGCP
HS-005A	BG-005 (BYPASS GATE) OPEN COMMAND	OPEN	existing MPS TP	DI	I-03	MANHATTAN PUMP STATION - NGCP
HS-005AA	BG-005 (BYPASS GATE) CLOSE COMMAND	CLOSE	existing MPS TP	DI	I-03	MANHATTAN PUMP STATION - NGCP
YN-005	BG-005 (BYPASS GATE) IN REMOTE (SCP)	SCP IN REMOTE	existing MPS TP	DO	I-03	MANHATTAN PUMP STATION - NGCP
YN-005AC	BG-005 (BYPASS GATE) IN LOCAL (SCP)	SCP IN LOCAL	existing MPS TP	DO	I-03	MANHATTAN PUMP STATION - NGCP
YN-005AD	BG-005 (BYPASS GATE) IN PLC (SCP)	SCP IN PLC MODE	existing MPS TP	DO	I-03	MANHATTAN PUMP STATION - NGCP
YN-005AE	BG-005 (BYPASS GATE) IN REMOTE (NGCP)	NGCP IN REMOTE	existing MPS TP	DI	I-03	MANHATTAN PUMP STATION - NGCP
YN-005AF	BG-005 (BYPASS GATE) IN LOCAL (NGCP)	NGCP IN LOCAL	existing MPS TP	DI	I-03	MANHATTAN PUMP STATION - NGCP
YN-005A	BG-005 (BYPASS GATE) OPEN INDICATION	OPENED	existing MPS TP	DO	I-03	MANHATTAN PUMP STATION - NGCP
YN-005AA	BG-005 (BYPASS GATE) CLOSED INDICATION	CLOSED	existing MPS TP	DO	I-03	MANHATTAN PUMP STATION - NGCP

SECTION 40 05 59.01 – INTERCEPTOR GATES

SPECIAL WORKS – IG/PC

TAG	SERVICE DESCRIPTION	FUNCTION	PLC	I/O TYPE	P&ID	NOTES
YN-005AB	BG-005 (BYPASS GATE) IN TRANSIT	IN TRANSIT	existing MPS TP	DO	I-03	MANHATTAN PUMP STATION - NGCP
YA-005	BG-005 (BYPASS GATE) FAULT INDICATION	FAULT	existing MPS TP	DO	I-03	MANHATTAN PUMP STATION - NGCP
HS-006A	IG-006 (INTERCEPTOR GATE) OPEN COMMAND	OPEN	existing MPS TP	DI	I-03	MANHATTAN PUMP STATION - NGCP
HS-006AA	IG-006 (INTERCEPTOR GATE) CLOSE COMMAND	CLOSE	existing MPS TP	DI	I-03	MANHATTAN PUMP STATION - NGCP
HS-006B	IG-006 (INTERCEPTOR GATE) LOWER DOGGING PIN EXTEND COMMAND	LOWER PIN EXTEND	existing MPS TP	DI	I-03	MANHATTAN PUMP STATION - NGCP
HS-006BB	IG-006 (INTERCEPTOR GATE) LOWER DOGGING PIN RETRACT COMMAND	LOWER PIN RETRACT	existing MPS TP	DI	I-03	MANHATTAN PUMP STATION - NGCP
HS-006C	IG-006 (INTERCEPTOR GATE) UPPER DOGGING PIN EXTEND COMMAND	UPPER PIN EXTEND	existing MPS TP	DI	I-03	MANHATTAN PUMP STATION - NGCP
HS-006CC	IG-006 (INTERCEPTOR GATE) UPPER DOGGING PIN RETRACT COMMAND	UPPER PIN RETRACT	existing MPS TP	DI	I-03	MANHATTAN PUMP STATION - NGCP
YN-006	IG-006 (INTERCEPTOR GATE) IN REMOTE (SCP)	SCP IN REMOTE	existing MPS TP	DO	I-03	MANHATTAN PUMP STATION - NGCP
YN-006AD	IG-006 (INTERCEPTOR GATE) IN LOCAL (SCP)	SCP IN LOCAL	existing MPS TP	DO	I-03	MANHATTAN PUMP STATION - NGCP
YN-006AE	IG-006 (INTERCEPTOR GATE) IN PLC (SCP)	SCP IN PLC MODE	existing MPS TP	DO	I-03	MANHATTAN PUMP STATION - NGCP
YN-006AF	IG-006 (INTERCEPTOR GATE) IN REMOTE (NGCP)	NGCP IN REMOTE	existing MPS TP	DI	I-03	MANHATTAN PUMP STATION - NGCP

SECTION 40 05 59.01 – INTERCEPTOR GATES

SPECIAL WORKS – IG/PC

TAG	SERVICE DESCRIPTION	FUNCTION	PLC	I/O TYPE	P&ID	NOTES
YN-006AG	IG-006 (INTERCEPTOR GATE) IN LOCAL (NGCP)	NGCP IN LOCAL	existing MPS TP	DI	I-03	MANHATTAN PUMP STATION - NGCP
YN-006A	IG-006 (INTERCEPTOR GATE) OPEN INDICATION	OPENED	existing MPS TP	DO	I-03	MANHATTAN PUMP STATION - NGCP
YN-006AA	IG-006 (INTERCEPTOR GATE) CLOSED INDICATION	CLOSED	existing MPS TP	DO	I-03	MANHATTAN PUMP STATION - NGCP
YN-006AB	IG-006 (INTERCEPTOR GATE) IN TRANSIT	IN TRANSIT	existing MPS TP	DO	I-03	MANHATTAN PUMP STATION - NGCP
YN-006AC	IG-006 (INTERCEPTOR GATE) MID POSITION INDICATION	MID POSITION	existing MPS TP	DO	I-03	MANHATTAN PUMP STATION - NGCP
YA-006	IG-006 (INTERCEPTOR GATE) FAULT INDICATION	FAULT	existing MPS TP	DO	I-03	MANHATTAN PUMP STATION - NGCP
YA-006A	IG-006 (INTERCEPTOR GATE) FAIL TO OPEN FAULT INDICATION	FAIL TO OPEN	existing MPS TP	DO	I-03	MANHATTAN PUMP STATION - NGCP
YA-006AA	IG-006 (INTERCEPTOR GATE) FAIL TO REACH MID POSITION FAULT INDICATION	FAIL TO REACH MID POSITION	existing MPS TP	DO	I-03	MANHATTAN PUMP STATION - NGCP
YA-006AB	IG-006 (INTERCEPTOR GATE) FAIL TO CLOSE FAULT INDICATION	FAIL TO CLOSE	existing MPS TP	DO	I-03	MANHATTAN PUMP STATION - NGCP
YN-006B	IG-006 (INTERCEPTOR GATE) LOWER DOGGING PIN EXTENDED	LOWER PIN EXTENDED	existing MPS TP	DO	I-03	MANHATTAN PUMP STATION - NGCP
YN-006BB	IG-006 (INTERCEPTOR GATE) LOWER DOGGING PIN RETRACTED	LOWER PIN RETRACTED	existing MPS TP	DO	I-03	MANHATTAN PUMP STATION - NGCP
YN-006C	IG-006 (INTERCEPTOR GATE) UPPER DOGGING PIN EXTENDED	UPPER PIN EXTENDED	existing MPS TP	DO	I-03	MANHATTAN PUMP STATION - NGCP

SECTION 40 05 59.01 – INTERCEPTOR GATES

SPECIAL WORKS – IG/PC

TAG	SERVICE DESCRIPTION	FUNCTION	PLC	I/O TYPE	P&ID	NOTES
YN-006CC	IG-006 (INTERCEPTOR GATE) UPPER DOGGING PIN RETRACTED	UPPER PIN RETRACTED	existing MPS TP	DO	I-03	MANHATTAN PUMP STATION - NGCP
YA-007	SCP ON UPS POWER	UPS POWER ON	existing MPS TP	DO	I-03	MANHATTAN PUMP STATION - NGCP
YA-007	SCP UPS FAULT	UPS FAULT	existing MPS TP	DO	I-03	MANHATTAN PUMP STATION - NGCP
YA-008	NORTH-TP ON UPS POWER	UPS POWER ON	existing MPS TP	DO	I-03	MANHATTAN PUMP STATION - NGCP
YA-008A	NORTH-TP UPS FAULT	UPS FAULT	existing MPS TP	DO	I-03	MANHATTAN PUMP STATION - NGCP
FS-014	FLUSH ACTIVE / FLOW OK	FLOW	existing MPS TP	DO	I-03	MANHATTAN PUMP STATION - SGCP
YN-014	FLUSH CYCLE DELAY TIMER ACTIVE (ON)	TIMER	existing MPS TP	DO	I-03	MANHATTAN PUMP STATION - SGCP
HS-015B	BG-015 (BYPASS GATE) & IG-016 (INTERCEPTOR GATE) ALARM RESET COMMAND	ALARM RESET	existing MPS TP	DI	I-03	MANHATTAN PUMP STATION - SGCP
HS-015A	BG-015 (BYPASS GATE) OPEN COMMAND	OPEN	existing MPS TP	DI	I-03	MANHATTAN PUMP STATION - SGCP
HS-015AA	BG-015 (BYPASS GATE) CLOSE COMMAND	CLOSE	existing MPS TP	DI	I-03	MANHATTAN PUMP STATION - SGCP
YN-015	BG-015 (BYPASS GATE) IN REMOTE (SCP)	READY / IN REMOTE	existing MPS TP	DO	I-03	MANHATTAN PUMP STATION - SGCP

SECTION 40 05 59.01 – INTERCEPTOR GATES

SPECIAL WORKS – IG/PC

TAG	SERVICE DESCRIPTION	FUNCTION	PLC	I/O TYPE	P&ID	NOTES
YN-015AC	BG-015 (BYPASS GATE) IN LOCAL (SCP)	SCP IN LOCAL	existing MPS TP	DO	I-03	MANHATTAN PUMP STATION - SGCP
YN-015AD	BG-015 (BYPASS GATE) IN PLC (SCP)	SCP IN PLC MODE	existing MPS TP	DO	I-03	MANHATTAN PUMP STATION - SGCP
YN-015AE	BG-015 (BYPASS GATE) IN REMOTE (SGCP)	SGCP IN REMOTE	existing MPS TP	DI	I-03	MANHATTAN PUMP STATION - SGCP
YN-015AF	BG-015 (BYPASS GATE) IN LOCAL (SGCP)	SGCP IN LOCAL	existing MPS TP	DI	I-03	MANHATTAN PUMP STATION - SGCP
YN-015A	BG-015 (BYPASS GATE) OPEN INDICATION	OPENED	existing MPS TP	DO	I-03	MANHATTAN PUMP STATION - SGCP
YN-015AA	BG-015 (BYPASS GATE) CLOSED INDICATION	CLOSED	existing MPS TP	DO	I-03	MANHATTAN PUMP STATION - SGCP
YN-015AB	BG-015 (BYPASS GATE) IN TRANSIT	IN TRANSIT	existing MPS TP	DO	I-03	MANHATTAN PUMP STATION - SGCP
YA-015	BG-015 (BYPASS GATE) FAULT INDICATION	FAULT	existing MPS TP	DO	I-03	MANHATTAN PUMP STATION - SGCP
HS-016A	IG-016 (INTERCEPTOR GATE) OPEN COMMAND	OPEN	existing MPS TP	DI	I-03	MANHATTAN PUMP STATION - SGCP
HS-016AA	IG-016 (INTERCEPTOR GATE) CLOSE COMMAND	CLOSE	existing MPS TP	DI	I-03	MANHATTAN PUMP STATION - SGCP
HS-016B	IG-016 (INTERCEPTOR GATE) LOWER DOGGING PIN EXTEND COMMAND	LOWER PIN EXTEND	existing MPS TP	DI	I-03	MANHATTAN PUMP STATION - SGCP
HS-016C	IG-016 (INTERCEPTOR GATE) LOWER DOGGING PIN RETRACT COMMAND	LOWER PIN RETRACT	existing MPS TP	DI	I-03	MANHATTAN PUMP STATION - SGCP

SECTION 40 05 59.01 – INTERCEPTOR GATES

SPECIAL WORKS – IG/PC

TAG	SERVICE DESCRIPTION	FUNCTION	PLC	I/O TYPE	P&ID	NOTES
HS-016C	IG-016 (INTERCEPTOR GATE) UPPER DOGGING PIN EXTEND COMMAND	UPPER PIN EXTEND	existing MPS TP	DI	I-03	MANHATTAN PUMP STATION - SGCP
HS-016CC	IG-016 (INTERCEPTOR GATE) UPPER DOGGING PIN RETRACT COMMAND	UPPER PIN RETRACT	existing MPS TP	DI	I-03	MANHATTAN PUMP STATION - SGCP
YN-016	IG-016 (INTERCEPTOR GATE) N REMOTE	SCP IN REMOTE	existing MPS TP	DO	I-03	MANHATTAN PUMP STATION - SGCP
YN-016AD	IG-016 (INTERCEPTOR GATE) IN LOCAL (SCP)	SCP IN LOCAL	existing MPS TP	DO	I-03	MANHATTAN PUMP STATION - SGCP
YN-016AE	IG-016 (INTERCEPTOR GATE) IN PLC (SCP)	SCP IN PLC MODE	existing MPS TP	DO	I-03	MANHATTAN PUMP STATION - SGCP
YN-016AF	IG-016 (INTERCEPTOR GATE) IN REMOTE (SGCP)	SGCP IN REMOTE	existing MPS TP	DI	I-03	MANHATTAN PUMP STATION - SGCP
YN-016AG	IG-016 (INTERCEPTOR GATE) IN LOCAL (SGCP)	SGCP IN LOCAL	existing MPS TP	DI	I-03	MANHATTAN PUMP STATION - SGCP
YN-016A	IG-016 (INTERCEPTOR GATE) OPEN INDICATION	OPENED	existing MPS TP	DO	I-03	MANHATTAN PUMP STATION - SGCP
YN-016AA	IG-016 (INTERCEPTOR GATE) CLOSED INDICATION	CLOSED	existing MPS TP	DO	I-03	MANHATTAN PUMP STATION - SGCP
YN-016AB	IG-016 (INTERCEPTOR GATE) IN TRANSIT	IN TRANSIT	existing MPS TP	DO	I-03	MANHATTAN PUMP STATION - SGCP
YN-016AC	IG-016 (INTERCEPTOR GATE) MID POSITION INDICATION	MID POSITION	existing MPS TP	DO	I-03	MANHATTAN PUMP STATION - SGCP
YA-016	IG-016 (INTERCEPTOR GATE) FAULT INDICATION	FAULT	existing MPS TP	DO	I-03	MANHATTAN PUMP STATION - SGCP

SECTION 40 05 59.01 – INTERCEPTOR GATES

SPECIAL WORKS – IG/PC

TAG	SERVICE DESCRIPTION	FUNCTION	PLC	I/O TYPE	P&ID	NOTES
YA-016A	IG-016 (INTERCEPTOR GATE) FAIL TO OPEN FAULT INDICATION	FAIL TO OPEN	existing MPS TP	DO	I-03	MANHATTAN PUMP STATION - SGCP
YA-016AA	IG-016 (INTERCEPTOR GATE) FAIL TO REACH MID POSITION FAULT INDICATION	FAIL TO REACH MID POSITION	existing MPS TP	DO	I-03	MANHATTAN PUMP STATION - SGCP
YA-016AB	IG-016 (INTERCEPTOR GATE) FAIL TO CLOSE FAULT INDICATION	FAIL TO CLOSE	existing MPS TP	DO	I-03	MANHATTAN PUMP STATION - SGCP
YN-016B	IG-016 (INTERCEPTOR GATE) LOWER DOGGING PIN EXTENDED	LOWER PIN EXTENDED	existing MPS TP	DO	I-03	MANHATTAN PUMP STATION - SGCP
YN-016BB	IG-016 (INTERCEPTOR GATE) LOWER DOGGING PIN RETRACTED	LOWER PIN RETRACTED	existing MPS TP	DO	I-03	MANHATTAN PUMP STATION - SGCP
YN-016C	IG-016 (INTERCEPTOR GATE) UPPER DOGGING PIN EXTENDED	UPPER PIN EXTENDED	existing MPS TP	DO	I-03	MANHATTAN PUMP STATION - SGCP
YN-016CC	IG-016 (INTERCEPTOR GATE) UPPER DOGGING PIN RETRACTED	UPPER PIN RETRACTED	existing MPS TP	DO	I-03	MANHATTAN PUMP STATION - SGCP
YA-017	SCP ON UPS POWER	UPS POWER ON	existing MPS TP	DO	I-03	MANHATTAN PUMP STATION - SGCP
YA-017	SCP UPS FAULT	UPS FAULT	existing MPS TP	DO	I-03	MANHATTAN PUMP STATION - SGCP
YA-018	SOUTH-TP ON UPS POWER	UPS POWER ON	existing MPS TP	DO	I-03	MANHATTAN PUMP STATION - SGCP
YA-018A	SOUTH-TP UPS FAULT	UPS FAULT	existing MPS TP	DO	I-03	MANHATTAN PUMP STATION - SGCP

END OF SECTION

NO TEXT ON THIS PAGE

40 05 59.02 INTERCEPTOR GATE INSTALLATION

GENERAL

1.01 Summary

A. The Contractor shall procure and install the interceptor gate systems as specified in Section 40 05 59.01 – Interceptor Gates and as shown on the Contract Drawings. The Contractor shall furnish all labor, materials and equipment necessary to procure, install, test and put in operation the interceptor gates and appurtenances manufactured by the sole source manufacturer Walz & Krenzer, Inc. (W&K) (referred to herein as the Equipment Manufacturer). All materials used in the fabrication of the interceptor gates are to be in accordance with this Section and Section 40 05 59.01 – Interceptor Gates, as shown on the Contract Drawings, and shop drawings.

B. The installation specifications described herein reference work specific to the Interceptor Gate equipment and components that are located at both the North and South Gate locations, within and between the Interceptor Gate chambers and the Interceptor Gate buildings. The details and specifications associated with the concrete chambers, buildings and associated equipment and materials, furnished and installed in support of the Interceptor Gate System are included elsewhere in the Contract.

C. The following index of this Section is included for convenience:

D.

Article	Title	Page
40 05 59.02	INTERCEPTOR GATE INSTALLATION	447
PART 1	GENERAL	447
1.01	Summary	447
1.02	Payment	448
1.03	Related Sections	449
1.04	References	450
1.05	Description	451
1.06	Quality Assurance	455
1.07	Submittals	456
1.08	Delivery, Storage, and Handling	457
1.09	Spare Parts, Special Tools, and Supplies	457
1.10	Special Warranty Provisions / Guarantee Periods	457
PART 2	PRODUCTS	457
1.11	Manufacturers	457
1.12	Materials / Equipment	457
1.13	Fabrication / Assembling / Finishes	458
1.14	Source Quality Control / Shop Tests	459

PART 3 EXECUTION 459
1.15 Examination / Preparation 459
1.16 Installation 459
1.17 Field Testing / Quality Control 460
1.18 Startup / Demonstration 462
1.19 Adjusting / Protection / Cleanup 462

1.02 Payment

A. Payment for the work of this Section shall be through Lump Sum Bid Item No. ESCR-51.12SG108, including both north and south interceptor gates and associated process mechanical and electrical equipment, and interconnections, in accordance with the plans, specifications and standards, or as directed by the Engineer, in place complete. No additional compensation will be due to Contractor for furnishing and installing everything necessary and required to provide a complete functional interceptor gate.

B. The Contractor shall include within Bid Item No. ESCR-51.12SG108 the amount of $5,663,420 for the interceptor gates (equipment, testing, field support, start up support, spare parts and services) furnished by Walz & Krenzer, Inc., which includes all work under specification 40 05 59.01. The Contractor shall make payments to the Equipment Manufacturer (Walz & Krenzer) according to the schedule below:

10% upon approval by City of all shop drawings including sub-assemblies and components for the interceptor gate system. Partial payments as shop drawings are approved will be permitted.

10% upon successful completion of proof-of-design model and testing, including shop drawings of the specified quarter-scale system and any necessary redesign and resubmission of shop drawings for the full-size system. (proof-of-design model and testing is to be conducted once; therefore, completion of this task shall be a 10% payment for both gates)

20% upon receipt of hydraulic accumulators at supplier

5% upon satisfactory completion of shop witness test of hydraulic assembly including accumulators

20% upon receipt and storage of stainless steel plates and shapes for the interceptor gate frame, gate panel, anchor plates as raw material at the fabrication facility

10% upon completion of all welding and fabrication and procurement of bypass gates and portable hydraulic power units (HPU), prior to testing

5% upon completion of all final operational shop testing and approval of test results with gate assembly

10% upon shipment from fabrication facility

5% upon system installation assistance and field testing completion

5% upon delivery of O&M manuals, training and spare parts (delivery of O&M manuals, training and spare parts is to be completed once; therefore, completion of this task shall be a 5% payment for both gates)

C. The Contractor shall be responsible for all costs associated with having the manufacturer present at each installation site should the Contractor require more days of installation instruction.

1.03 Related Sections

A. The Contractor shall be responsible for meeting all applicable requirements in the following related specifications to all equipment furnished for the installation of the Interceptor Gate Systems, including equipment furnished by the Interceptor Gate System Manufacturer in addition to what is already specified in Section 40 05 59.01.

B. Section 01 11 00 – Summary of Work

C. Section 01 43 10 – Contractor's Work Quality

D. Section 01 43 15 Witness Shop Testing

E. Section 01 61 50 General Product Requirements

F. Section 01 65 00 - Product Delivery Requirements

G. Section 01 73 17 Installation of Equipment

H. Section 01 75 10 Preliminary and Final Field Tests

I. Section 01 78 24 Spare Parts and Maintenance Manuals

J. Section 01 78 25 – Operations and Maintenance Manuals

K. Section 05 05 23.01 - Welding

L. Section 05 05 23.02 – Miscellaneous Metal Fastenings

M. Section 05 50 00 – Metal Fabrications

N. Section 26 05 00 – Basic Electrical Requirements

O. Section 26 05 20 – Low-Voltage Wires, Cables and Accessories

P. Section 26 29 13 – Enclosed Controllers

Q. Section 40 05 19 – Ductile Iron Process Pipe

R. Section 40 05 97 Piping and Equipment Identification Systems

S. Section 40 05 22 – Steel and Stainless-Steel Process Pipe

T. T. Section 40 60 01 Process Monitoring and Control Systems

U. S. Section 40 61 13 PMCS General Requirements

V. T. Section 40 61 24 Quality Assurance for Control Systems

W. Section 40 67 63 – Uninterruptible Power System

X. Section 40 66 53 – Telemetry System

Y. Section 40 05 59.01 – Interceptor Gates

1.04 References

A. The American Society of Mechanical Engineers (ASME):

B1.20.1 Pipe Threads, General Purpose (Inch)

Boiler and Pressure Vessel Code Section IX

B. American Society for Testing and Materials (ASTM):

A126 Standard Specification for Gray Iron Castings for Valves, Flanges and Pipe Fittings

A167 Standard Specification for Stainless and Heat-Resisting Chromium-Nickel Steel Plate, Sheet, and Strip

A276 Standard Specification for Stainless Steel Bars and Shapes

A320 Standard Specification for Alloy-Steel and Stainless-Steel Bolting for Low-Temperature Service

A380 Standard Practice for Cleaning, Descaling, and Passivation of Stainless Steel Parts, Equipment, and Systems

A572 Standard Specification for High-Strength Low-Allow Columbium Vanadium Structural Steel

F1069-87 Standard Specification for Doors, Watertight, Gastight/Airtight and Weathertight, Individually Dogged, for Marine Use

F1073-87 Standard Specification for Door Fittings, for Watertight /Gastight /Airtight, Weathertight, and Non-Tight Doors, for Marine Use

F1196-00 Standard Specification for Sliding Watertight Door Assemblies

C. America Water Works Association (AWWA):

C561-04 Fabricated Stainless-Steel Slide Gates

D. American Bureau of Shipping (ABS)

E. American Institute of Steel Construction (AISC)

Specifications for Design, Fabrication, and Erection of Structural Steel for Buildings

F. American Iron and Steel Institute (AISI)

CL 304, 316, 316L

G. American Society of Civil Engineers (ASCE) 7-10, Minimum Design Loads for Buildings and Other Structures, Chapter 13

H. American Society of Mechanical Engineers (ASME)

I. American Welding Society (AWS)

Structural Welding Code D1.1, D1.3, D1.6

J. American Society for Nondestructive Testing Recommended Practice No. SNT-TC-1A

K. Society of Automotive Engineers (SAE):

J356 Welded Flash-Controlled Low-Carbon Steel Tubing Normalized for Bending, Double Flaring, and Beading

J524 Seamless Low-Carbon Steel Tubing Annealed for Bending and Flaring

J525 Welded and Cold Drawn Low-Carbon Steel Tubing Annealed for Bending and Flaring

L. National Electrical Manufacturers Association (NEMA):

Enclosure Type 4X

Enclosure Type 7

Enclosure Type 12

M. National Fire Protection Association (NFPA):

National Electrical Code

1.05 Description

A. General

The Contractor shall furnish all labor, rigging, materials and equipment necessary to furnish, install, test and put in operation the interceptor gates and appurtenances manufactured by the sole source Equipment Manufacturer Walz & Krenzer, Inc. as specified in Section 40 05 59.01 – Interceptor Gates.

The Contractor shall be responsible for maintaining the integrity of the existing interceptor throughout construction. At locations where the existing interceptor is to be cut and embedded into the interceptor gate chamber walls, the Contractor's Engineer shall design and install a circumferential band clamped around the interceptor pipe surface to prevent buckling of the existing outer pipe steel plates and walls. The strengthening band/clamp shall be constructed of 316 stainless steel and bending stresses shall not exceed 50 percent of the yield stress of the material. The strengthening band/clamp shall be in continuous contact with the outer interceptor shell, and include adjustability to account for any irregularities in the interceptor's shape. Contractor shall also be entirely responsible for the design of any temporary supports to maintain the integrity of the existing interceptor through construction and installation of the Interceptor Gate System. The design shall be signed and sealed by licensed New York State Professional Engineer and submitted to the City for approval prior to start of construction.

The Contractor shall also be entirely responsible for furnishing and designing the temporary flume bypass to maintain interceptor flow at both existing interceptors through construction and installation of the Interceptor Gate System. The design shall be signed and sealed by a licensed New York State Professional Engineer and submitted to City and NYCDEP Bureau of Wastewater Treatment (BWT) for approval prior to the start of construction. The design of the bypass flume shall meet the requirements of Article 10.13 NYC DEP BWSO Standard Sewer and Water Main Specifications in addition to the following minimum criteria:

a. Contractor shall notify DEP BWT Operations 24-hours prior to any entry into DEP structures, sewers, and interceptors.

b. Contractor shall maintain the structural integrity of the existing interceptor during excavation, cutting, and flume insertion. Flame or plasma cutting shall not be permitted.

c. The flumes shall be designed to withstand without leakage, a head of 37 feet, as referenced to the invert of the interceptor.

d. The flumes shall be supported from above to prevent buckling and excessive load applied to the interceptor and flume seals.

e. Flumes and seals shall account for interior geometry and curvature of interceptor segment to be bypassed.

f. Contractor shall provide calculations which verify that each of the designed flume installations can meet the following requirements:

1) Flumes shall provide no more than three (3) inches of head loss at 100 MGD; and

2) Flumes shall provide no more than six (6) inches of head loss at 150 MGD; and

3) Flumes shall be capable of conveying 200 MGD of flow with no more than nine (9) inches of head loss.

g. The flumes shall be designed for installation spanning full length of the interceptor gate chambers (i.e., length of interceptor to be removed) and be removable after installation of the interceptor gates and mass concrete placement are completed.

h. The flumes shall be designed to allow re-installation after removal, if required for construction completion and/or adjustments to the installed gate. Flumes and seals shall account for interior geometry and curvature of interceptor segment to be bypassed.

i. The contractor shall submit flume designs and calculations to NYCDEP BWT Operations for approval 90 days prior to fabrication and construction.

The Contractor shall also be entirely responsible for the installation, performance, and maintenance of the temporary flume bypass described above. The installation and maintenance of the bypass flume shall meet the requirements of Article 10.13 NYC DEP BWSO Standard Sewer and Water Main Specifications in addition to providing the following during construction:

j. Contractor shall ensure that excavation which exposes any portion of the exterior of the interceptor, removal of portions of the interceptor, and installation of the flume bypass at the northern and southern interceptor gate chamber locations does not occur simultaneously. The flume at one interceptor gate chamber location shall be fully installed, operational, and monitored for at least one month and through at least one significant wet weather event (i.e., a 1.5-inch rainfall) prior to the Contractor beginning excavation of and modifications to the interceptor at the other interceptor gate chamber location.

k. Contractor shall provide for sufficient air passage through interceptor manhole covers to prevent cover displacement in the event of air pressure build up in the interceptor during construction.

l. Prior to cutting of the existing interceptor, Contractor shall implement measures to prevent and capture any debris from entering the interceptor flow. The interceptor shall be excavated to at least two (2) feet below the springline prior to removal of the crown of the interceptor to prevent spoils from washing into the interceptor. The interceptor shall be cut using demo or wire saw or other similar method such that debris is fully captured during the cutting activity. Jackhammering and other disruptive methods are not permitted. The Contractor shall promptly remove any debris, silt, and any other foreign material which enters the interceptor.

m. The Contractor shall be responsible for the structural integrity and flow through the interceptor within 500 feet of upstream and downstream of each interceptor gate chamber. Contractor shall repair any breaks and/or leaks and perform all required maintenance to immediately remove and dispose of any debris at the Contractor's own cost and expense.

n. The Contractor shall furnish and install wireless ultrasonic level sensors at interceptor manholes upstream and downstream of the interceptor gate construction locations to remotely monitor flow levels in the interceptor 90 days prior to and throughout the duration of construction. The Contractor shall also furnish and install high water level alarms with dial-out to Contractor..

The Contractor shall furnish and install all special fittings, hoses, tubing, valves, adapters and electrical power, conduit and wiring required to make the interceptor gate system complete and fully functional, with the exception of furnishing those provided by the Equipment Manufacturer as specified in Specification Section 40 05 59.01 – Interceptor Gates, unless shown otherwise on the Contract Drawings.

The Contractor shall design, furnish and install a stainless-steel fabricated spool piece with side outlet between the interceptor gate frame and upstream wall of the interceptor gate chamber at each interceptor gate location, as follows:

o. The spool piece shall be stiffened to hold its round during installation and concrete placement.

p. The spool piece shall have an upstream flange and tabs for anchoring to the upstream structural wall. The flange and tabs shall be sized such that the anchors are placed not closer than 4 inches outside the outer surface of the existing interceptor. Anchors shall be designed to support the spool piece weight and all loads associated with concrete placement.

q. The flange and tabs shall be coordinated with the tie rods and anchor plates of the interceptor gate frame extensions.

r. The spool piece shall be fabricated from at least two pieces to allow installation with the bypass flume in place.

s. The side outlet pipe shall be provided with a square flange for bypass gate mounting. The size of the flange and bolt pattern shall be coordinated with bypass gate shop drawing(s).

t. The spool piece length shall allow adjustment of the position of the interceptor gate frame. Clearance between the spool piece and the interceptor gate frame shall not exceed 1 inch. The transition between the spool piece and the interceptor gate frame shall be smooth and flush after concrete placement.

u. Additional material and fabrication requirements are detailed in Article 1.12.D, herein.

Pipe and hydraulic tube restraining devices and pipe hangers shall be designed, furnished, and installed by the Contractor in accordance with the requirements herein and with Section 40 05 07 Hangers and Supports for Process Piping.

The installation of hydraulic hoses shall be in strict accordance with hose manufacturer's recommendations, including but not limited to over-rotation and excessive bending of the hoses.

The Contractor shall furnish all labor, rigging, materials, and incidentals required for the installation of the Interceptor Gate System in accordance with the installation instructions and within the tolerances provided by the Equipment Manufacturer. Once installed, the Interceptor Gate System shall be complete and operational with all control equipment and accessories as specified herein and described in the Contract Documents.

All below-grade work shall meet NEC Class I, DIV Group D, Division I Hazardous Locations.

All mechanical and electrical non-structural components within the Interceptor Gate structures are subject to Seismic Design Category 'D' and Risk Category 'IV'. All mechanical components within the Gate structures shall have an Importance Factor (Ip) of 1.5 (required for continued operation of the facility). These components shall be designed, installed, anchored, and braced to resist seismic forces in accordance with ASCE 7-10, Chapter 13. These components shall be furnished with a manufacturer's certificate of seismic qualification in accordance with ASCE 7-10, Chapter 13. Bracing support members shall be Type 316 stainless steel for bolted construction and Type 316L for welded construction. All bracing support fasteners shall be Type 316 stainless steel. Restraint and anchoring calculations certifying seismic compliance shall be calculated, signed, and sealed by a licensed New York State Professional Engineer.

B. Electrical

Electrical power conductors, that are factory attached to the system components and devices, shall be run to the junction boxes as shown on the Drawings. Electrical installation and connections, including junction boxes and local disconnect switches, telemetry, and all work at each Interceptor Gate Building and the Manhattan Pump Station, shall be furnished and installed by the Contractor.

The Contractor shall furnish interconnecting electrical and signal wiring from each piece of equipment as necessary in order to achieve full functionality of the systems.

C. Identification System for Components

Mechanical equipment, instrumentation, piping, valves, tubing, and structures shall be properly identified in conformance with Specification Section 40 05 97 – Identification for Process Equipment.

1.06 Quality Assurance

A. Contractor shall submit a Quality Control/Quality Assurance Plan as described in Section 40 05 59.01 – Interceptor Gates, incorporating the Equipment Manufacturer's quality control process, materials, and requirements for the assembly of all interceptor gate components to be supplied herein.

B. The Contractor shall employ non-destructive testing (NDT) personnel that are AWS certified and meet SNT-TC-1A requirements. All field welding shall be subject to NDT inspection by the Engineer. Field welding of stainless steel shall be prohibited with the exception of field welding of stainless-steel hydraulic piping within the hydraulic duct bank and as directed by the Engineer.

C. The Contractor shall furnish all labor and materials to pre-charge Interceptor Gate Hydraulic Power Units and accumulators with an inert, industrial grade nitrogen, which shall be submitted to and approved by the Interceptor Gate Equipment Manufacturer. Contractor to charge accumulators to the specified pressure (up to a maximum of 5,000 psig) in accordance with the manufacturer's instructions prior to the introduction of hydraulic fluid.

D. Inspection of structural steel at the fabricating shop shall be as follows:

All fabrication and erection shall be performed by AISC Quality Certified Companies, a list of which shall be submitted and approved by the Engineer.

Shop inspections may be made by the City representatives. The Contractor shall give at least 60 working day written notice to the City prior to the beginning of any fabrication Work so that inspection may be provided. The Contractor shall furnish all facilities for the inspection of materials and workmanship in the shop, and the inspectors shall be allowed supervised access to the necessary parts of the works.

a. Inspectors shall have the authority to reject any materials or work which does not meet the requirements of these Specifications.

b. Inspection at the shop is intended as a means of facilitating the work and avoiding errors but is expressly understood that it will in no way relieve the Contractor from the responsibility for furnishing proper materials or workmanship under this Specification.

All welding shall be performed by certified welders under the immediate supervision of a representative of a standard testing agency retained by the Contractor but reporting directly to and under the control of the City and meeting the requirements of Section 05 05 23.01 – Welding.

The Contractor shall engage an independent testing and inspection agency, approved by the City, to inspect high-strength bolted connections. The agency shall report directly and be under the control of the City. The costs of all high-strength bolt inspections shall be borne by the Contractor.

c. Rejected bolts shall be either replaced or retightened as required. In cases of disputed bolt installation, the bolts in question shall be checked

by a calibrated wrench certified by an approved independent special testing laboratory. The certification shall be at the Contractor's expense and provided to the City Team.

The Contractor shall be solely responsible for the correctness of all shop and field fabrication and fit

E. The Contractor shall have sole responsibility for coordinating the Work to assure that all testing and inspection procedures required by the City are provided in accordance with the Contract.

F. The Engineer will perform quality assurance audits to ensure quality workmanship. These audits will include, but not be limited to, visual inspections, ultrasonic, radiographic, magnetic particle or dye penetrant testing of the welding and cutting performed at each fabrication shop responsible for manufacturing the main equipment components as specified. The Contractor shall notify the City 60 working days prior to the start of fabrication.

1.07 Submittals

A. Contractor shall submit an Installation Plan of both interceptor gates prior to releasing the interceptor gates design for fabrication. The Installation Plan shall include, but not be limited to the following:

Staging plan indicating locations for Interceptor Gate System components and construction equipment and materials.

Schedule indicating construction sequencing and operations timeline that will be fulfilled within the allowed work restrictions

Handling and protection of all gate components

Rigging plans for all phases of delivering interceptor gate components from the time they are loaded onto the Contractor’s freight service until they are installed at their final location, and

Bypass and/or fluming plan in accordance with Article 1.05.A, herein.

B. Contractor shall submit shop drawings for the spool piece for each interceptor gate, as defined in Article 1.05.A.5, herein. The shop drawings shall include design calculations, signed and sealed by a New York State licensed professional engineer.

C. Contractor shall submit a Field-Testing Plan to the City for approval in accordance with Article 1.17, herein.

D. Full hydraulic schematic and electrical diagram showing the operation of the interceptor gate system, with clear indication of limits of Equipment Manufacturer supplied components.

E. The Contractor shall review and provide all submittals from the Equipment Manufacturer as specified in Specification Section 40 05 59.01, Article 1.07.

Prior to review by the Engineer, all submittals shall have been reviewed and approved by the Contractor and shall be stamped to indicate “Final for Construction” by the Contractor. Such approval by the Contractor shall constitute the Contractor’s representation that the Contractor has verified all existing conditions, quantities, dimensions, specified performance criteria, installation

requirements, materials, catalog numbers and similar data with respect thereto and has reviewed or coordinated each submittal with other submittals and samples and with the requirements of the Work and Specifications.

The review of shop drawings by the Engineer shall not in any way relieve the Contractor of responsibility for the adequacy of all components, features, and the complete product as a whole as required under this Contract, the responsibility for the proper fitting of the Work in strict conformance with Contract requirements and site conditions, and from the necessity of furnishing material and workmanship required by the Contractor developed Design Drawings, as approved by the Engineer, and contract Design Criteria, in addition to that required on the shop drawings.

1.08 Delivery, Storage, and Handling

A. The system supplier and the Contractor shall comply with the requirements contained in Section 01 65 00 - Product Delivery, Storage and Handling.

1.09 Spare Parts, Special Tools, and Supplies

B. Not Used.

1.09 Special Warranty Provisions / Guarantee Periods

A. A contractor's guaranty of gate installation shall be provided for a coverage period of five (5) years from the Substantial Completion.

The equipment furnished under this Contract shall be guaranteed to be free from defects in workmanship, design and/or materials for a period of five (5) years unless otherwise specified in the individual equipment specifications. The period of such warranties shall start on the date of Substantial Completion. If the equipment does not perform satisfactorily, the start up period of the warranty period will be delayed until the equipment demonstrates proper operation. The Contractor shall repair or replace without charge to the City any part of equipment which is defective or showing undue wear within the guarantee period, or replace the equipment with new equipment if the mechanical performance is unsatisfactory; furnishing all parts, materials, labor, etc., necessary to return the equipment to its specified performance level.

The Contractor shall provide an equipment warranty logbook prepared specifically for this project and submit two (2) copies of the document to the City prior to final payment. The equipment warranty logbook shall include a summary listing of all equipment warranties provided, date received, and start date and end date of warranty period. A copy of each equipment warranty and equipment start-up certification shall also be provided in the document.

PRODUCTS

1.10 Manufacturers

A. Not Used.

1.11 Materials / Equipment

A. Interconnecting piping, tubing, hoses, and fittings between equipment systems not supplied by the Equipment Manufacturer shall be in accordance with the requirements herein, Section 40 05 19 – Ductile Iron Process Pipe, Section 40 05 22 – Steel and

Stainless Steel Process Pipe, and as shown on Contract drawings. Contractor supplied materials shall be consistent with piping and valve schedule as provided in Section 40 06 20 – Piping and Valve Schedules and compatible with materials supplied by the Equipment Manufacturer, as specified in Section 40 05 59.01 – Interceptor Gates.

B. Anchoring and restraining hardware shall be in accordance with Section 40 05 07 – Hangers and Supports for Process Piping and Section 05 05 23.02 – Miscellaneous Metal Fastenings.

C. Electrical

The Contractor shall perform all electrical work in accordance with Section 26 05 00 Basic Electrical Requirements and as shown on the drawings.

The Contractor shall furnish and install all electrical conduit and wiring for Interceptor Gate equipment, motor starters, instrumentation and control devices, and control panels as shown on the drawings, not furnished by the Equipment Manufacturer as specified in Section 40 05 59.01 – Interceptor Gates.

Electrical cable shall be rated for use under wastewater and shall be in accordance with Specification Section 26 05 20 - Low-Voltage Wires, Cables and Accessories.

Electrical panels, enclosures, cabinets and terminal boxes shall be in accordance with Specification Section 26 29 13 - Enclosed Controllers

Interceptor gate electrical components shall be grounded to achieve a maximum resistance of 5 ohms in accordance with Section 26 05 00-Basic Electrical Requirements:

a. All control panels, telemetry panels, individual motor starter panels, hydraulic equipment and facility pumps shall be grounded. The equipment shall be thoroughly grounded and bonded to the facility grounding system. All metal conduits and electrical equipment shall be grounded. All hydraulic tubes shall be grounded using jumpers. Grounding type fittings shall be installed on flexible conduits.

b. An insulated cable for equipment grounding shall be installed with the phase conductors within the conduit for the nominal power and control circuits

D. The spool piece with side outlet shall be fabricated of 316L stainless steel and have wall thickness of at least ½ inch with additional strengthening structural members as required. The spool piece shall be fabricated and installed as shown on the Contract Drawings, as specified herein, and in accordance with Section 05 50 00 – Metal Fabrications and Section 40 05 22 – Steel and Stainless Steel Process Pipe.

1.12 Fabrication / Assembling / Finishes

A. Hydraulic Piping Duct Bank

Construct a concrete duct bank as shown on the Contract Drawings and following the requirements outlined in this Section.

The duct bank shall connect the hydraulic vault at the interceptor gate building to the interceptor gate chamber. The duct bank shall be supported by a corbel at the exterior face of the chamber wall.

Hydraulic process piping shall be installed within casing piping, embedded in the duct bank. Hydraulic piping shall be restrained and supported within the casing piping by ¾" thick HDPE spacers designed and manufactured by Advanced Products & Systems (APS), or approved equal. The number and distance between spacers shall be in accordance with Equipment Manufacturer's recommendations.

The spacers shall be designed to support the hydraulic pipe within the casing pipe and to restrain it against vibration. The spacers shall be designed to allow installation and retrieval of hydraulic piping from the interceptor gate chamber without slipping or breaking..

Hydraulic process piping shall be longitudinally restrained near the exterior wall of the interceptor gate chamber. The restraining member shall secure the hydraulic piping to the casing piping.

Spacers, restraints and anchoring calculations shall be prepared, signed, and sealed by a licensed New York State Professional Engineer, and shall be in accordance with Section 40 05 07 – Hangers and Supports for Process Piping and Section 05 05 23.02 – Miscellaneous Metal Fastenings.

A gas-tight seal rated for Class I, Division 1 Hazardous Locations shall be provided for each casing pipe at the interceptor gate chamber. The seal shall consist of a threaded EYS horizontally installed fitting with 3" hub filled with Chico Sealing Compound or approved equal.

1.13 Source Quality Control / Shop Tests

A. The Contractor shall coordinate with the City team for all witness shop tests in accordance with Section 40 05 59.01 – Interceptor Gates and shall provide the City sixty (60) working days notice in writing prior to test.

B. The Contractor shall pick up, load, deliver, and unload the quarter-scale model to a shipping destination determined by the City, at no additional expense.

EXECUTION

1.14 Examination / Preparation

A. From the Manufacturer's place of origin, the Contractor shall assume all costs and protect from damage Freight on Board (FOB) through shipment to the place of destination until substantial completion is obtained.

B. The Contractor shall inspect all items including all boxes, crates and packages containing materials and equipment for damage that may have occurred during shipment prior to their removal from the truck or other manner of conveyance. Any damage shall be reported immediately to the Engineer.

C. The Contractor shall then carefully remove the materials and equipment from the truck or trucks on which they were shipped. The materials and equipment shall then be transported to the place of installation at the job Site. The Contractor shall be liable for loss or damage to the materials and equipment that may occur while being unloaded, transported, stored or installed.

1.15 Installation

A. Install interceptor gates in accordance with the Manufacturer's recommendations, approved means and methods plan, approved Shop Drawings and as required herein.

B. The Contractor shall install interceptor gates and all related components within the Manufacturer recommended installation tolerances.

Upon installation of each element/sub-assembly, the Contractor shall measure and record actual tolerances, employing high precision measurement instruments as recommended by the Equipment Manufacturer, in the presence of the Equipment Manufacturer's representative.

The Contractor shall submit these measurements and instrument calibration records to the Equipment Manufacturer and Engineer for approval.

The Contractor shall correct all out-of-tolerance installed components per Equipment Manufacturer recommendations at no cost to the City.

The Contractor shall not install the interceptor gate seal greater than 14 consecutive calendar days before operational field test of the interceptor gate system.

C. Upon completion of field installation of the interceptor gate frame, including all out-of-tolerance adjustments, the Contractor shall perform or provide a 3D laser scan of the as-built condition of the interceptor gate frame. The 3D laser scan must have a precision / accuracy of 1/64" . The Contractor shall provide the results of the 3D laser scan to the Equipment Manufacturer for fabrication of the carbon steel interceptor gate frame and witness shop testing. The Contractor shall also provide as-built drawings of the installed condition of the interceptor gate frame, including any discrepancies in trueness, plumbness, and other field-installed discrepancies.

1.16 Field Testing / Quality Control

A. Contractor shall submit for Engineer approval, a Field-Testing Plan for each Interceptor Gate System (including bypass gates).

The Field-Testing Plan shall account for temporary bypass fluming to maintain interceptor flow. Bypass and/or fluming shall be removed to field test the Interceptor Gate System and reinstalled if further adjustments are required. Contractor shall make all adjustments and retest the equipment, removing and reinstalling the bypass flume as many times as necessary, until the City and Equipment Manufacturer approve the installation of all gate components for substantial completion, at no additional cost to the City.

The Field-Testing Plan shall account for testing to be conducted only during dry weather and no dry weather overflow is allowed during testing.

B. After installation of the gates, control equipment and all appurtenances, and approval of the Field-Testing Plan, the Contractor shall subject each interceptor gate system to a field running test under actual operating conditions in accordance with the Field-Testing Plan and as required herein:

All field testing shall be performed in the presence of and under the supervision of the Equipment Manufacturer as specified in Section 40 05 59.01 – Interceptor Gates, Article 1.19.

All hydraulic piping and tubing shall be pressure tested after installation.

As part of the field test, each Interceptor Gate System (including the bypass gate) shall be operated through the full range of travel in accordance with the design operating criteria detailed

in Section 40 05 59.01 – Interceptor Gates, Article 1.05.H.2. When the interceptor gate is closed during the field test, it shall remain closed and dogged for a minimum of 60 minutes and as directed by the City. The field tests shall demonstrate that all equipment, controls and monitoring operate as specified. A minimum of 10 tests shall be performed for each gate as follows:

a. System powered by HPU, tested two times each (four total)

   1) Local

   2) Remote at Manhattan Pump Station

b. System powered by accumulator assembly only, tested two times each (four total)

   1) Local

   2) Remote at Manhattan Pump Station

c. System powered by portable HPU, tested two times

   1) Local

Test interceptor gates for leakage and test interceptor and bypass gates for opening and closing against the maximum heads practicable under operating conditions. Adjust and repair the seating and sealing surfaces as necessary to reduce leakage between the frame and the gate such that the leakage rate does not exceed the maximum design leakage rate as specified in Specification 40 05 59.01 – Interceptor Gates. The Contractor shall document in the field-testing plan a leakage testing procedure that shall include, but not be limited to the following:

d. The interceptor gate in each chamber shall be tested for leakage. The Contractor shall isolate a volume immediately downstream of the interceptor gate by installing bulkhead(s) downstream of the interceptor gate. The water level upstream of the closed gate shall be monitored at the nearest manhole, and must be controlled by partially opening the bypass gate to prevent dry weather overflow. Pumping the volume of sewage that is isolated between the closed gate and the bulkhead will allow evaluation of the leakage rate.

e. The head during the leakage test shall be measured from the water surface elevation upstream to the invert of the gate. The water surface elevation upstream shall be safely lower than the closest regulator weir setting to prevent overflow and at a minimum, shall be one foot above the top of the tested gate.

f. If corrective measures are required, the Contractor shall reinstall the flume, drain and clean the chamber, and perform adjustments as necessary.

   1) After any necessary adjustments are complete, the Contractor shall repeat the leak test to confirm that no further adjustments are required.

The Contractor shall include in the Field-Testing Plan a procedure to test the successful operation of the flushing system independently and prior to testing of the gate operation. The flushing system shall also be tested as part of the overall gate system operation.

Any adjustments, repairs, and modifications required to meet the acceptance criteria shall be performed by the Contractor at no cost to the City

Upon successful completion of the field test for each Interceptor Gate System, a report documenting all results, findings, adjustments, repairs, modifications and conclusions shall be prepared by the Contractor and certified by the Equipment Manufacturer's Head of QA/QC Department and Officer of the Company and shall be submitted to the Engineer for final approval.

1.17 Startup / Demonstration

A. The Contractor shall coordinate startup activities such that the work is fully completed and that the Equipment Manufacturer's qualified field inspector has verified that the electrical work and control wiring terminations through the control panel to each piece of equipment furnished under Section 40 05 59.01 is fully functioning prior to start-up.

B. The Contractor shall provide startup and training in coordination with the Equipment Manufacturer as specified in Section 40 05 59.01, Article 1.20 and as required for all components of the interceptor gate system, including but not limited to the following:

Interceptor Gate System operation and maintenance

Flushing system operation and maintenance

Remote operation via telemetry panel

Training shall include field exercise and demonstration

1.18 Adjusting / Protection / Cleanup

A. Not Used.

END OF SECTION

NO TEXT ON THIS PAGE

40 05 59.05 ISOLATION GATE

GENERAL

1.01 Summary

A. The Contractor shall furnish, install, and test all slide gates and operators, including stainless steel slide gates; manual operators; and related controls and accessories as shown on the Contract Drawings or specified herein.

Slide gates and gate operators shall be constructed of materials suitable for use in the water and wastewater environment to which they will be exposed and shall be constructed of the materials specified in Article 1.12. Gates and gate operators shall meet the general design requirements set forth in Article 1.05 and the specific design and operating requirements described in the Products part of this section and shown on the Contract Drawings.

Where gate operators are installed in National Electrical Code (NEC) Class I, Group D, Division 1 or 2 hazardous locations (as specified), provide operator-related electrical equipment and appurtenances that are UL Listed or FM Approved, Inc., as applicable, and are approved for use in such areas.

Provide manual gate operators as specified. The operators shall be complete, including a suitable enclosure, with all appurtenances necessary for the operator to perform the intended function. Such appurtenances include, but are not limited to, anchor bolts and other mounting hardware, operating nuts, and other such items.

For each gate provide the type of operator shown on the Contract Drawings or specified herein.

1.02 Payment

A. There is no separate payment provision for this Section.

1.03 Related Sections

A. Section 40 05 56 – Process Valves

1.04 References

A. The American Society of Mechanical Engineers (ASME):

B1.20.1 Pipe Threads, General Purpose (Inch)

B. American Society for Testing and Materials (ASTM):

A126 Standard Specification for Gray Iron Castings for Valves, Flanges and Pipe Fittings

A167 Standard Specification for Stainless and Heat-Resisting Chromium-Nickel Steel Plate, Sheet, and Strip

A276 Standard Specification for Stainless Steel Bars and Shapes

A320 Standard Specification for Alloy-Steel and Stainless Steel Bolting for Low-Temperature Service

A436 Standard Specification for Austenitic Gray Iron Castings

B98 Standard Specification for Copper-Silicon Alloy Rod, Bar, and Shapes

B164 Standard Specification for Nickel-Copper Alloy Rod, Bar, and Wire

B584 Standard Specification for Copper Alloy Sand Castings for General Applications

D707 Standard Classification System and Basis for Specification for Cellulose Acetate Butyrate Molding and Extrusion Compounds (CAB)

D2000 Standard Classification System for Rubber Products in Automotive Applications

D3935 Standard Classification System and Basis for Specification for Polycarbonate (PC) Unfilled and Reinforced Material

C. America Water Works Association (AWWA):

C561 Fabricated Stainless-Steel Slide Gates

1.05 Description

A. General

Gate identification number, location, service, type, size, design pressure, type of operator and type of stem are listed herein and shown on the Contract Drawings.

Design slide gates for specified seating or unseating pressures, measured to the centerline of the slide gate and to the invert of the slide gate.

Base the loading of operating mechanisms on the following: the minimum vertical load is fifty percent (50%) of the force, in pounds, on the gate resulting from the operating head acting on the horizontal centerline of the gate multiplied by the effective area of the gate, plus the weight of the slide or disc and stem. The operating head is the distance from the centerline of the slide gate to the maximum water level of the channel within which the gate is located.

B. Slide Gates

Provide slide gates of stainless steel as shown on the Contract Drawings or specified herein. Provide all slide gates of the same type from one manufacturer.

Provide one-piece side frames and guides with vertical stiffeners at edges of horizontal stiffeners to reduce high local stresses at the edge of horizontal stiffeners.

Open channel slide gates shall meet the requirements of AWWA C561, except as otherwise specified.

Design slide gate discs to limit deflection under maximum loading to 1/720 of the span, except closed channel stainless steel slide gates, for which deflection of the gate disc shall be limited to the lesser of 1/1000 of the gate width or 1/16 inch.

Design yoke members supporting operators to limit deflection to the lesser of 0.25 inch or 1/720 of the span of the gate.

a. Maximum permissible leakage with clean water shall be as specified in the Products part of the section for the specific type of gate.

1.06 Quality Assurance

A. Not Used.

1.07 Submittals

A. Contractor shall submit Shop Drawings for approval of the Engineer. Submittals shall include, but not be limited to:

Arrangement and erection drawings of the gates, operators and control equipment;

Schematic control diagrams, electrical connection diagrams, and complete description of the control system;

Operating characteristics.

B. Slide Gates:

Submit the manufacturer's structural computations for approval, showing that stresses and deflections are within specified limits.

Submit calculations of anchor bolts, including concrete penetration. Indicate all forces on structures resulting from gate operation.

Submit computations for sizing of operator and stem and of bearing pressures on power screw threads.

C. Quality Control:

Submit manufacturer's certified performance and material specifications, as specified.

Submit material test reports representing all major components of slide gates and operators. All such components shall be traceable to the original heat and/or lot numbers unless otherwise approved.

Submit an affidavit of compliance of slide gate manufacture with all applicable provisions of AWWA C501 and additions as specified.

Operation and Maintenance Manuals: Submit operation and maintenance manuals for slide gates and gate operators.

1.08 Delivery, Storage, and Handling

A. The Contractor shall provide for delivery, storage and handling all products furnished under this Section.

1.09 Spare Parts, Special Tools, and Supplies

A. Not Used.

1.10 Special Warranty Provisions / Guarantee Periods

A. Not Used.

PRODUCTS

1.11 Manufacturers

A. Stainless Steel Slide Gates:

Rodney Hunt, (Jash), Orange, MA

Whipps, Inc., Athol, MA,

RW Gate, Inc. Troy, NY

Or approved equal

1.12 Materials / Equipment

A. General: Fabricate the various equipment components of materials that meet the following requirements.

B. Slide Gates:

Stainless Steel Slide Gates: Type 316 Stainless Steel

Table 2.02.B.1: Slide Gate Materials of Construction

Component	**Material**
Disc, Frame, and any component not listed elsewhere	Stainless Steel, ASTM A240, Type 316L
Fasteners	Stainless Steel, ASTM, A276, Type 316 or ASTM, A564, Type 630
Seat Facings	Ultra-High Molecular Weight Polyethylene (UHMWPE) ASTM D-4020
Bottom Seal	Neoprene ASTM D 2000, Grade 2 BC-510 or EPDM
Stems	Stainless Steel, ASTM A564, Type 630 or ASTM, A276 Type 316
Stem Guides	Stainless Steel, ASTM A276, Type 316
Stem Guide Bushing	Bronze, ASTM B98, Alloy UNS No. C65100 or C65500
Stem Coupling	Stainless Steel, ASTM A564, Type 630 or ASTM, A276, Type 316

C. Slide Gate Components

Frame, guides, slide, yoke, stem, stem guides, stem couplings, rising-stem thrust nuts, and flush bottom seal retainer – ASTM A276, Type 316 stainless steel

Non-rising stem thrust nuts and gate actuator lift nut – B584, CA 865 bronze

Seats and stem guide bushings – ASTM D4020 UHMW-PE.

Seals –UHMW-PE.

Flush-bottom seal – UHMW-PE.

Wedges (if required) – ASTM A276 Type 304 or 316 stainless steel or UHMW-PE.

Bolts, fasteners, and hardware – ASTM A276, Type 316 stainless steel

1.13 Fabrication / Assembling / Finishes

A. Stainless Steel Slide Gates

Closed Channel Stainless Steel Slide Gates

a. General: The gate disc shall be constructed of flat stainless steel plate with a thickness as shown, specified or required, reinforced with structural or formed members of stainless steel to limit gate deflection to the lesser of 1/1000 of gate width or 1/16 inch. All components of the gate shall be designed to withstand the maximum head indicated on the Contract Drawings and in the gate schedule in the seating and unseating directions and the maximum output of the hoist. The working design stresses shall not exceed the lesser of 40% of the yield strength or 25% of the ultimate strength of the materials for maximum load conditions. The minimum thickness of the disc plate, its reinforcing members and all structural components of the guide and frame shall be 1/4 inch. The gate disc shall be passivated via full dip acid bath.

b. Frame: The gate shall be constructed of structural members formed with stainless steel plate and welded to form a rigid one-piece frame. The gate frame shall be of a flat back design to allow wall mounting without a box-out into the concrete opening. The gate shall be attached to the concrete wall with stainless steel anchor bolts. All sealing surfaces shall have a finish smoother than 125 micro-inch rms. The frame shall be passivated via full dip acid bath.

c. The invert shall be a stainless steel angle welded to the bottom of the guides to form the seating surface for the flush-bottom seals attached to the disc.

d. Where self-contained gates are required, the yoke shall consist of two structural or formed members welded to the top of the guides in a manner to allow removal of the disc without removal of the yoke. The yoke shall be designed so that the deflection under full operating load will not exceed the lesser of 0.25 inch or 1/720 of the gate width. The yoke shall be passivated via full dip acid bath.

e. Seals: Provide self-adjusting seals of UHMW with compression cords. Bulb seals requiring pressure pads requiring adjustment are not allowed. Plastic or polyethylene is not acceptable as a seal material.

All seals shall be replaceable without dewatering the gate. Frame mounted seals are not acceptable.

f. The gate leakage, when subjected to the specified heads, shall not exceed:

1) Under seating head conditions, the leakage shall not exceed 0.1 gallon per minute per foot of seating perimeter.

2) For seating and unseating head conditions up to a maximum of 20 feet, measured from the gate invert, the leakage shall not exceed 0.1 gallon per minute per foot of seating perimeter.

B. Slide Gate Operators and Lifting Stems

General: Provide slide gate operators and lifting stems that meet the requirements for slide gate operators, except as modified herein.

Yoke: Mount operators on a structural yoke supported by a head frame.

Support: Provide an operator supporting structure capable of supporting the operator and all appurtenances with maximum deflection not to exceed the lesser of 0.25 inch or 1/720 of the span of the gate under full operating load when a 80-lb. effort is placed on the hand crank. Design the structure with a factor of safety of 5 based on the ultimate tensile, compressive and shear strength of the material.

Stem Design:

a. Stems shall be designed as non-rising stem operators, unless otherwise specified. Securely fasten stems to the gate by means of a casting, mounting block or angles secured to the gate. Acme-threaded stem to have 63 microinch finish or better. Gate stem attachment to be provided with provisions for keying or pinning the stem to the gate attachment.

b. Stems shall be solid bar type and have ACME rolled or cut and polished threads with surface of 32 micro-inch or better. The threads shall be full depth threads. Stub threads are not acceptable. Provide adjustable internally threaded bronze stop collars with stainless steel set screw. Bronze or stainless steel couplings threaded and keyed or bolted to the stem. The stem shall be secured with 316 stainless steel fasteners with anti-loosening feature such as thread locking compound or nylon insert nuts.

c. Design stems for the maximum operating torque of the operator and the weight and service of the gate. Limit the length over radius of gyration (l/r) ratio of the stem to 200. The minimum stem diameter shall be 1.50 inches.

Stem Covers: Provide vent holes in stem covers to prevent condensation.

1.14 Source Quality Control / Shop Tests

A. Witness Shop Tests of Slide Gates

Slide gates having areas of four square feet or larger shall be witness shop tested for leakage. Where more than two slide gates of the same size require testing, the Engineer will select two for testing; should the specified leakage rate be exceeded, all gates of the same size shall be tested.

EXECUTION

1.15 Examination / Preparation

A. Not used.

1.16 Installation

A. General: Install slide and slide gates in accordance with the manufacturer's recommendations and approved Shop Drawings and as required herein.

1.17 Field Testing / Quality Control

A. Manufacturer's Field Services: Furnish the services of a qualified representative of each of the various manufacturers as required herein.

The representative shall inspect the installation of equipment, field test the equipment, make any necessary adjustments, field calibrate the equipment upon completion of the installation of each actuator and gate, and place it in initial operation. In addition, they shall instruct the operating personnel in operations, calibration, trouble-shooting and maintenance of the equipment.

Reports: Submit a report from the manufacturer of each visit to the site. Reports shall provide complete information on time, schedule, tasks performed, persons contacted, problems corrected, test results, training, instruction and all other pertinent information.

B. Tests

After installation of the gates, control equipment and all appurtenances, subject the units to a field running test under actual operating conditions as required herein and in the Contract Documents.

Test slide gates for leakage, strength, and opening and closing against the maximum heads practicable to obtain under operating conditions. Adjust and repair the seating and sealing surfaces as necessary to stop any noticeable leaks around the frames or gates. Provide an installation for which the amount of seepage through any slide gate does not exceed the maximum allowable amounts specified in Products part of the section for that type of gate.

Slide Gates and Operators

a. Field test all slide gates and operators by having each operator open and close the gate through the full range of travel at least four times. The field tests shall demonstrate that all equipment, controls and monitoring operate as specified and within the allowable leakage rates.

All tests must be witnessed and approved by the Engineer.

1.18 Startup / Demonstration

A. Not Used.

1.19 Adjusting / Protection / Cleanup

A. Not Used.

END OF SECTION

40 05 97 IDENTIFICATION FOR PROCESS EQUIPMENT

GENERAL

1.01 SUMMARY

A. Furnish and install all components of the system for identification of piping and equipment. The system includes the placing of identification signs and direction-of-flow arrows on all visible process piping, the placing of nameplates on process equipment and structures, and painting in color of all equipment and pipe, except stainless steel or aluminum surfaces, as shown on the Contractor's Shop Drawings submitted under the related Sections for equipment, piping and valves, and as required for a complete job.

1.02 PAYMENT

A. There is no separate payment provision for this Section.

1.03 RELATED SECTIONS

1.04 REFERENCES

A. The following standards are referenced in this Section:

ASTM D523 - Standard Test Method for Specular Gloss

ASTM D543 - Standard Practices for Evaluating the Resistance of Plastics to Chemical Reagents

ASTM D638 - Standard Test Method for Tensile Properties of Plastics

ASTM D646 - Standard Test Method for Grammage of Paper and Paperboard (Mass per Unit Area)

ASTM D709 - Standard Specification for Laminated Thermosetting Materials

ASTM D790 - Standard Test Methods for Flexural Properties of Unreinforced and Reinforced Plastics and Electrical Insulating Materials

ASTM D792 - Standard Test Methods for Density and Specific Gravity (Relative Density) of Plastics by Displacement

ASTM D5420 - Standard Test Method for Impact Resistance of Flat, Rigid Plastic Specimen by Means of a Striker Impacted by a Falling Weight (Gardner Impact)

Federal Standard 595B Colors description

1.05 MANUFACTURER'S GUARANTEE

A. Provide the specified items from firms regularly engaged in the manufacture of identification devices of types and sizes required, with at least five (5) years' experience in manufacturing signs. In addition, the manufacturer shall guarantee the sign, in writing, against color fading, chipping, corroding or any other manufacturing defects for a period of ten (10) years.

1.06 SPARE PARTS AND ACCESSORIES

A. Furnish the following spare parts and accessories:

For every 20 pipe identification signs installed:

a. One pair stainless steel mounting screws

b. One pair stainless steel threaded brackets

c. One pair fiber or plastic washers

d. One pair stainless steel banding seals

One set banding tools and banding accessories

One stainless steel banding strap, approximately 1000 ft.

One complete nameplate mounting assembly for every 20 nameplates installed.

One stainless steel cable and splice for every 20 valve identification tags

B. Provide all spare parts and accessories suitably boxed and marked for storage and reordering.

PRODUCTS

1.07 MATERIALS

A. Construct fiberglass reinforced plastic identification signs and nameplates of 70 mils thick fiberglass reinforced plastic conforming to ASTM D709.

B. Provide fiberglass reinforced plastic process with a blemish free, low gloss surface of superior permanence and durability in the colors selected. Provide each identification sign and nameplate in two colors and with the legend specified. Provide the backside of the sign in black or some other uniform color.

C. Provide lettering made by silk screening or other permanent embedment of subsurface printed graphics in the material so as to produce a clear, legible sign. Do not place lettering, symbols or markings containing the name of the manufacturer on the signs.

D. Provide signs for piping and valve identification with two 3/8 inch diameter grommet-protected holes located on the long side center line, the center of the hole to be ½ inch from the edge. Provide nameplates for equipment and structures with four 3/8 inch diameter grommet-protected holes, the center of the hole located ½ inch away from the edges. Provide all holes with suitable brass or stainless steel grommets.

E. Construct all signs and nameplates in conformity with ASTM D523, D638, D646, D790, D792 and D5420.

1.08 DIMENSIONS OF SIGNS AND TAGS

A. Provide identification signs and nameplates rectangular in shape and of the dimensions specified below. A dimensioned tolerance of plus or minus 1/16 inch is permissible.

TYPE OF SIGN	Sign Dimensions (Width x Length)
PIPE IDENTIFICATION -	
1. Outside diameter of pipe (including pipe insulation):	
a. 4 inches and larger	3-1/2 X 12 INCHES
b. less than 4 inches	1-1/2 x 7 inches
VALVE IDENTIFICATION -	
1. Valve tags	2 inches diameter
2. Operating stands for valves and sluice gates	1-1/2 x 7 inches
NAMEPLATES -	
1. Equipment and structures	3-1/2 x 12 inches

1.09 LETTERING OF SIGNS

A. Perform all lettering and numbering on identification signs and nameplates in block style in size and spacing to suit the size of sign, as approved by the Engineer.

B. Unless otherwise approved, limit the legend on pipe identification signs to one line and to a total of 12 letters and spaces, and the legend on equipment nameplates to two lines and a maximum of 35 letters and spaces.

C. Submit samples of the lettering to be used for fiberglass reinforced plastic signs to the Engineer for approval before manufacturing begins. Such samples must show the height, width and spacing of letters and numbers for any three (3) legends of ten or more letters and spaces as listed in Article 1.12.

1.10 CHEMICAL RESISTANCE

A. Provide fiberglass reinforced plastic signs resistant to abrasion, impact, corrosion, and the following acids, alkalis, salts and solvents in accordance with ASTM D543:

10 percent citric acid

5 percent acetic acid

3-30 percent sulfuric acid

10 percent ammonium hydroxide

10 percent sodium chloride

turpentine

mineral spirits

heptane

kerosene

ethyl alcohol

ethyl acetate

transformer oil

heavy duty detergents

water

B. Submit certification on acid resistance to the Engineer prior to installation.

1.11 COLORS

A. Code pipeline signs and equipment nameplates and finish coats of paint for pipe lines and equipment in basic colors.

B. Provide brilliant colors, distinctive shades matching as closely as possible (without custom color blending) the following basic colors as specified by the Munsell Color System (MN):

Table Of Standard Colors	
Color	**Munsell Number**
White	MN - N8.8/
Yellow	MN - 4Y7.5/12.8
Orange	MN - 0.5 YR 4.6/12.2
Red	MN - 7R 3.6/12.7
Brown	MN - 2.5 YR 4.2/4.3
Gray	MN - 2.5PB 5.8/1.7
*Charcoal	MN - 6B 5/0.4
Black	MN - N1/
Blue	MN - 3PB 3.3/7.4
Green	MN - 8G 4.4/6.2
* Provide color "Charcoal" for paints equivalent to MN - N 3.75.	

C. Provide identification signs for pipelines of all sizes, mechanical equipment, sluice gates and valves in the color combinations specified below under "General Color Code".

Service Line	COLORS	
	Letters	**Background**
1. FIRE AND STANDPIPE	White	Red
2. SLUDGE OR UTILITY GAS		
a. High Pressure	Black	Orange
b. Low Pressure	White	Orange
3. FUEL OIL	Orange	White
4. LUBRICATING OIL	Black	White
5. HYDRAULIC FLUID	Red	White
6. CHEMICALS		
a. Hazardous	Black	Yellow
b. Relatively Safe	Brown	Yellow
7. OZONE	Black	Yellow
8. CHLORINE		
a. Gas	Black	Yellow
b. Liquified	Red	Yellow
c. Solution	Blue	Yellow
9. LIQUIDS THICK IN SOLIDS a. Primary Sludge b. Digested Sludge c. Thickened Sludge	White	Black
10. LIQUIDS THINNER IN SOLIDS a. Secondary Sludge b. Return Sludge c. Mixed Liquor	White	Brown

Service Line	COLORS	
	Letters	Background
d. Grease, Scum, Grit		
11. LIQUIDS WEAK IN SOLIDS a. Sewage b. Effluent c. Thickening Tank Drains, Vents, Overflow d. Digester Tank Drains, Vents, Overflow e. Concentration Tank Drains, Vents, Overflow f. Storage Tank Overflow, Drains g. Settling Tank Overflow, Drains h. Sump Drains	Black	Gray
12. STRAINED EFFLUENT a. Spray Water b. Flushing Water c. Plant Water	Yellow	Gray
13. NON-POTABLE WATER a. Seal Water b. Chilled Water c. Engine Cooling Water d. Sludge Heating Water e. Hydraulic Control Water	Yellow	Blue
14. CITY WATER	White	Blue
15. STEAM, DANGEROUSLY HOT WATER	Blue	Orange
16. ENGINE AIR a. Starting	Orange	Green

Service Line	COLORS	
	Letters	**Background**
b. Intake	Yellow	Green
17. ENGINE EXHAUST	Yellow	Orange
18. VACUUM SERVICE	Black	Green
19. PLANT SERVICE (COMPRESSED) AIR	White	Green
20. PROCESS (BLOWER) AIR	Gray	Green
21. HIGH PRESSURE AIR	Orange	Green
22. HEATING, VENTILATING AND CONDITIONING AIR (Equipment And Ductwork)	Green	Charcoal

D. Provide vents and drains of the same color combination as the contents of tanks and equipment vented and drained.

E. Identification signs for miscellaneous services not included in the General Color Code shall be black letters on a white background.

1.12 PIPING BANDS

A. Piping bands:

All new and altered piping shall receive identification bands. Such bands shall be 6-inches wide, neatly made by masking, and spaced at intervals of 30-inches on centers regardless of the diameter of the pipe being painted. The Contractor may use approved precut and prefinished metal bands on piping, in lieu of the masked and painted bands, where approved by the Engineer.

B. Piping Identification Legend:

The contractor shall apply identification legends to all types and sections of piping as shown on the Drawings or as designated by the Engineer. Such legends shall be in the form of plain block lettering giving the name of the pipe content in full or abbreviated form and showing the direction of flow by arrows. All lettering and arrows shall be of the plastic snap-on type, Seton nameplate "setmarks", or equal, or they shall be formed by stenciling in an approved manner using white or black as directed and shall have an overall height in inches in accordance with the following table:

Diameter of Pipe or Pipe Covering	Height of Lettering
3/4 to 1-1/4 inches	1/2-inches

1-1/2 to 2-inches	3/4-inches
2-1/2 to 6-inches	1-1/4-inches
8 to 10-inches	2-1/2-inches
Over 10-inches	3-1/2-inches

Identification lettering shall be located midway between color coding bands where possible. Identification lettering and arrows shall be placed as directed by the Engineer, but shall generally be located each fifteen (15) feet in pipe length, and shall be properly inclined to the pipe axis to facilitate easy reading. In the event lettering and arrow identifications are required for piping less than 3/4-inch in diameter, the Contractor shall furnish and attach approved color-coded tags where instructed.

1.13 LEGEND FOR PIPE IDENTIFICATION SIGNS

A. Provide identification signs with the following words or abbreviations in color combinations shown to identify the pipe line service:

Pipe Identification Signs			
		Color Code	
LEGEND	Service	Lettering	Background
DIESEL FUEL	Diesel fuel oil	Orange	White
DRAIN - *	Drain - *	*	*
FIRE	Fire line	White	Red
FLUSH WATER	Pump flushing water	Yellow	Gray
HYDRAULIC	Hydraulic fluid	Red	White
METER - *	Metering - *	*	*
NITROGEN GAS	Nitrogen gas	*	*
SUMP - *	Sump pump line - *	*	*
VENT - *	Vent - *	*	*
WATER	City water	White	Blue
* Where shown, specified or required, the legend shall also include the equipment, structure or identification number to which the service applies.			

B. Number gates and valves in conformity with the Basic Code as specified by the Operation and Maintenance Manual; see Article 1.14. Perform color combinations for such lines and valves in the same color combinations as the medium serviced and as given in the "General Color Code" of Article 1.11.

C. In addition to the identification requirements listed above, for all piping at pressures above 200 psig, show the maximum pressure level within the piping.

1.14 VALVE IDENTIFICATION TAGS

A. Furnish and attach valve identification tags on all valves and controls.

B. Provide round fiberglass reinforced plastic discs tags, approximately 2 inches in diameter, made in conformity with the requirements of Article 1.07. Provide tags with one 1/8 inch grommet protected hole at the top for fastening to the valve body using 1/16 inch diameter cable and splices or pins as approved. Provide grommets, cable splices and pins of stainless steel or other approved corrosion resistant material.

C. Provide numbering code for the identification tags in conformity with the Basic Code as specified by the Operation and Maintenance Manual for the plant. Assign identification numbers subject to the approval of the Engineer and in conformity with the entire piping and equipment identification system. Provide identification code for each valve and control without duplication. Provide lettering on identification tags not less than 5/16

inch high and limited to two lines. Silk-screen lettering in correct color combination; stenciled or painted numbers and lettering will not be accepted.

D. In addition to the tagging requirements listed above, provide tags at all valves at pressures above 200 psig with the operating pressure within the valve shown.

1.15 ARROWS

A. Make direction-of-flow arrows for attachment to pipe identification signs from No. 16 U.S. gauge Type 304 stainless steel, the full width of the sign. Make the arrow head with a tapered point, about 90 degrees at the apex, extending one half of the sign width from the sign edge and one half of the sign width extending under the sign. Finish all edges of the arrow. Make point with a radius of 1/4 inch for the 3-1/2 inch wide sign and a radius of 3/16 inch for the 1-1/2 inch wide sign. Punch detents on the arrows to prevent twisting of the point. Drill one hole in the arrow in alignment with the hole in the pipe identification sign so that both sign and arrow can be mounted with the same screw and bracket.

B. Submit sample direction-of-flow arrows for both sizes of pipe identification signs to the Engineer for approval before installation.

1.16 NAMEPLATES

A. Provide nameplates for equipment and structures in the same color combination as the medium they service. Legends for nameplates must follow the terminology shown. Provide numbering system consistent with the Operation and Maintenance Manual.

B. The following is a representative list, not necessarily complete, of nameplate legends with appropriate color combinations to which the equipment identification number must be added:

N A M E P L A T E S			
Legend		Color Code	
First Line (1)	Second Line (2)	Lettering	Background
AIR BLOWER	**	White	Charcoal
AIR COMPRESSOR	**	White	Green
AIR HANDLING	UNIT **	White	Charcoal
AIR CONDITIONING	UNIT **	White	Charcoal
AUXILIARY ELECTRIC	GENERATOR **	Red	Green
AUXILIARY LUBE	OIL PUMP **	Black	White
BAR SCREEN	**	Black	Gray
BLOWER CONTROL	CABINET **	Gray	Green

N A M E P L A T E S			
Legend		Color Code	
First Line (1)	Second Line (2)	Lettering	Background
BLOWER CONTROL AIR	RECEIVER **	White	Green
BLOWER LUBE OIL	AUX. PUMP **	Black	White
BLOWER LUBE OIL	COOLER **	Black	White
BLOWER LUBE OIL	RESERVOIR **	Black	White
BLOWER SILENCER	**	Gray	Green
BULK LUBE OIL	STORAGE **	Black	White
BYPASS OIL FILTER	**	Black	White
CHILLERS	**	White	Blue
CLEAN LUBE OIL	TANK **	Black	White
CONCENTRATION TANK	**	White	Black
CONDENSATE PUMP	**	Yellow	Blue
CONDENSATE RECEIVER	**	Yellow	Blue
CONDENSER	WATER COOLED **	Yellow*	Blue*
CONDENSER	AIR COOLED **	Yellow*	Blue*
CONE VALVE AIR	RECEIVER **	White	Green
DESCALER	**	Yellow	Blue
DIESEL TANK	**	Orange	White
DIGESTION TANK	**	White	Black
DIRTY LUBE OIL	TANK **	Black	White
EFFLUENT-LUBE OIL	COOLER **	Yellow	Gray
EFFLUENT WATER	STRAINER **	Yellow	Gray
EFFLUENT WATER	PUMP **	Black	Gray

N A M E P L A T E S			
Legend		Color Code	
First Line (1)	Second Line (2)	Lettering	Background
EFFLUENT WATER	TANK **	Yellow	Gray
ENGINE GENERATOR	**	Red	Green
ENGINE J.W.	MAKEUP	Yellow	Blue
ENGINE LUBE OIL	PURIFIER **	Black	White
ENGINE LUBE OIL	TANK **	Black	White
ENGINE OIL SUMP	TANK **	Black	White
EXHAUST FAN	**	White	Charcoal
EXCESS SLUDGE	DISTRIB. BOX **	White	Black
EXHAUST STEAM	CONVERTER **	Blue	Orange
FAN COIL UNITS	**	Blue*	Orange*
FLUSHING WATER	PUMP **	Yellow	Gray
FUEL OIL	PUMP **	Orange	White
FUEL OIL TANK	NO. 2 OIL **	Orange	White
FUEL OIL TANK	NO. 4 OIL **	Orange	White
FUEL OIL TANK	NO. 6 OIL **	Orange	White
FULL FLOW OIL	FILTER **	Black	White
GAS BOOSTER	**	Black	Orange
GASOLINE TANK	**	Orange	White
GAS COMPRESSOR	**	Black	Orange
GAS RECEIVER	**	Black	Orange
GAS SURGE TANK	**	White	Orange

N A M E P L A T E S			
Legend		Color Code	
First Line (1)	Second Line (2)	Lettering	Background
HEAT EXCHANGER	OIL **	White	Orange
HEAT EXCHANGER	STEAM-WATER **	Blue	Orange
HEAT EXCHANGER	WATER-WATER **	Blue	Orange
HEAT RECOVERY	SILENCER **	Yellow	Orange
HEAT. & VENT.	UNIT **	White	Charcoal
HIGH PRESSURE AIR	COMPRESSOR **	Orange	Green
HIGH PRESSURE AIR	DRYER **	Orange	Green
HIGH PRESSURE AIR	RECEIVER	Orange	Green
HOT WATER BOILER	**	Blue	Orange
HOT WATER CONVERTER	DOMESTIC **	Blue	Orange
HOT WATER HEATER	ELECTRIC **	Blue	Orange
HOT WATER GENERATOR	DOMESTIC **	Blue	Orange
HYDRO-PNEUMATIC	TANK **	White	Blue
INLET SLUICE GATE	CYLINDER **	Red	White
JACKET WATER CIRC.	PUMP **	Yellow	Blue
JACKET WATER	COOLER **	Yellow	Blue
JACKET WATER ENG.	OIL COOLER **	Yellow	Blue
LUBE OIL	PURIFIER **	Black	White
LUBE OIL STORAGE	PUMP **	Black	White
LUBE OIL STORAGE	TANK **	Black	White
LUBE OIL TRANSFER	PUMP **	Black	White
MIXED SLUDGE	PUMP **	White	Brown

N A M E P L A T E S			
Legend		Color Code	
First Line (1)	Second Line (2)	Lettering	Background
OUTLET SLUICE GATE	CYLINDER **	Red	White
OZONATOR	**	Black	Yellow
PLANT AIR	AFTERCOOLER **	White	Green
PLANT AIR	COMPRESSOR **	White	Green
PLANT AIR	RECEIVER **	White	Green
PLANT WATER	MAKEUP **	Yellow	Gray
PLANT WATER	TANK **	Yellow	Gray
PLANT WATER	PUMP **	Yellow	Gray
PUMP – CHILLED WATER	**	White	Blue
PUMP – CONDENSER WATER	**	Yellow	Blue
PUMP – DOMESTIC	HOT WATER **	White	Blue
PUMP – FEED WATER	**	Yellow	Blue
PUMP – FIRE	**	White	Red
RETURN FAN	**	White	Charcoal
RETURN SLUDGE	PUMP **	White	Brown
SCUM PIT	**	White	Brown
SEAL WATER	PUMP **	Yellow	Blue
SEWAGE EJECTOR	**	Black	Gray
SEWAGE FLOW	METER **	Black	Gray
SEWAGE PUMP	**	Black	Gray
SLUICE GATE CONT.	AIR CHAMBER **	White	Green

N A M E P L A T E S			
Legend		Color Code	
First Line (1)	Second Line (2)	Lettering	Background
SLUICE GATE CONT.	AIR TANK **	White	Green
SLUICE GATE HYD.	FLUID PUMP **	Red	White
SLUDGE HEATER	**	White	Black
SLUDGE HEATING H.W.	CIRC. PUMP **	White	Orange
SLUDGE HEAT WATER	MAKEUP TANK **	Yellow	Blue
SLUDGE DOCK	PUMP **	White	Black
SLUDGE RECIRC.	PUMP **	White	Brown
SLUDGE STORAGE	TANK **	White	Black
SLUDGE TRANSFER	BOX **	White	Black
SLUDGE TRANSFER	PUMP **	White	Black
SPRAY WATER	PUMP **	Yellow	Gray
STANDBY GENERATOR	**	Red	Green
STARTING AIR	COMPRESSOR **	Orange	Green
STARTING AIR	TANK **	Orange	Green
STEAM BOILER	**	Blue	Orange
SUMP PUMP	**	Black	Gray
SUMP PUMP – CONC.	TANK **	Black	Gray
SUMP PUMP – DIGEST.	TANK **	Black	Gray
SUMP PUMP – EFF.	VAULT **	Black	Gray
SUPPLY FAN	**	White	Charcoal
THICKENER	**	White	Black

N A M E P L A T E S			
Legend		Color Code	
First Line (1)	Second Line (2)	Lettering	Background
TRASH RACK	**	Black	Gray
UNIT HEATER – STEAM	**	White*	Charcoal*
UNIT HEATER – WATER	**	White	Charcoal*
WASTE LUBE OIL	PUMP **	Black	White
WASTE LUBE OIL	TANK **	Black	White
WATER TREATMENT	PUMP **	Brown	Yellow
WATER TREATMENT	TANK **	Brown	Yellow

(1) Nominal limit of 18 letters, numerals and spaces.

(2) Nominal limit of 17 letters, numerals and spaces.

*Where equipment is mounted on roofs or where exposed to the public view, such as in lobby or office areas, the color will be selected by the Engineer.

**The legend on these nameplates also includes the appropriate six-digit numeral and letter designation for such equipment and structures as specified by the Operation and Maintenance Manual.

1.17 ADDITIONAL SIGNS AND NAMEPLATES

A. In addition to the legends specified above, the Engineer may order the Contractor to furnish and install additional identification signs, arrows and nameplates at no additional cost to the City. Such additional signs may be requested near completion of the Work and will be limited to no more than five (5) signs for each of the five types specified in Article 1.08. Conform legends and color combinations for additional signs to the requirements specified.

1.18 COLOR OF PIPELINES

A. Paint all pipelines and equipment in conformity with the requirements of Specification 09900 - Painting. Color code the color of the final coats of paint.

B. Match the color of the final coats as closely as possible, without custom blending, to the colors presented in the following table. The colors in this table are identified by their

Federal Standard 595B Colors identification number and shall match this standard. The names of the colors in this table are for convenience only.

C. Do not paint aluminum or stainless steel ductwork or jackets on insulated pipelines. Should the Sections state that flanges, flexible couplings, valves and fittings for such jacketed lines not be covered, paint only the flanges, flexible couplings, valves and fittings in accordance with the piping color code.

Pipeline Identification		
ABBR.	Process/Service Line	Fed. Std. 595B Color
AD	Aerator Drain	Gray 16187
APLM	Anionic Polymer	Green 14090
BLW	Balance Water	Blue 15193
BLO	Blower Lube Oil	White 17925
CPLM	Cationic Polymer	Green 14090
CSTC	Caustic (Sodium Hydroxide)	Orange 22544
CEN	Centrate	Gray 16492
CF	Centrifuge Feed	Black 14036
CHA	Channel Air	Green 14260
CHWR	Chill Water Return	Blue 17877
CHWS	Chill Water Supply	Blue 15450
CHEFF	Chlorinated Effluent	Gray 17875
CW	City Water	Blue 15200
CLD	Clarifier Drain	Gray 16187
CLWR	Cold Water Return	Blue 15187
CLWS	Cold Water Supply	Blue 15125
CA	Compressed Air (Plant Air)	Green 14449
CCSK	Concentrated Skimmings	Tan 17778
CSB	Concentrator Subnatant	Gray 16314
C	Condensate	Gray 16357
CTD	Contact Tank Drain	Gray 16187
DFM	Defoamant	Pink 11630

Pipeline Identification		
ABBR.	Process/Service Line	Fed. Std. 595B Color
DGOF	Degrit Overflow	Gray 16250
DGS	Degritted Primary Sludge	Olive 14257
DWS	Dewatered Sludge	Navy 15044
DF	Diesel Fuel	Mustard 13275
DSD	Digested Sludge Disposal	Brown-black 10032
RCD	Digested Sludge Recirculation (mixing)	(See Note 1)
DSR	Digested Sludge Recycle	Black 14084
DSS	Digested Sludge to Storage	Black 17038
DST	Digested Sludge Transfer	Gray 16081
DSK	Dilute Skimmings	Tan 16405
ELF	Elutriation Feed	Black 15042
ECWR	Engine Cooling Water Return	Gray 15526
ECWS	Engine Cooling Water Supply	Navy 15045
EXH	Engine Exhaust	Stainless Steel Jacket
ELO	Engine Lube Oil	White 17925
FECL	Ferric Chloride	Blue 15095
FEF	Final Effluent	Gray 16492
FRS	Fire and Standpipe	Red 11350
FW	Flushing Water	Blue 15090
FF	Fuel Fill	Tan 10266
FO	Fuel Oil	Brown 16160
	Gasoline Fill Port – high octane	Red 11086
	Gasoline Fill Port – middle octane	Blue 15056
	Gasoline Fill Port – low octane	White 17925
	Gasoline Fill Port, unleaded – high octane	Red 11086 with white 17925 cross

Pipeline Identification		
ABBR.	Process/Service Line	Fed. Std. 595B Color
	Gasoline Fill Port, unleaded – middle octane	Blue 15056 with white 17925 cross
	Gasoline Fill Port, unleaded – low octane	White 17925 with black 17038 cross
	Gasoline Vapor Recovery	Orange 12246
GRIT	Grit	Gray 14064
HPAR	High Pressure Air (Plant Air)	Green 14272
DG(H)	High Pressure Digester Gas	Orange 22510
HPUGS	High Pressure Utility Gas	Orange 22510
HWR	Hot Water Return (heating)	Orange 12215
HWS	Hot Water Supply (heating)	Orange 11400
HVACEX	HVAC Exhaust	Gray 14158
HVACR	HVAC Return	Gray 14077
HVACS	HVAC Supply	Gray 14056
HCW	Hydraulic Control Water	Blue 15107
HOR	Hydraulic Oil Return	Brown 10059
HOS	Hydraulic Oil Supply	Brown 10045
ITK	Intake (Engine Air)	Green 14672
JKWR	Jacket Water Return	Gray 15109
JKWS	Jacket Water Supply	Navy 15050
	Kerosene Fill Port	Brown 20100
LM	Lime	Tan 13740
DG(L)	Low Pressure Digester Gas	Orange 22510
LPUGS	Low Pressure Utility Gas	Orange 22510
LF	Lube Fill	White 17925
MH	Methanol	Brown 10233
MS	Mixed Sludge (heating)	(See Note 1)
ODCDW	Odor Control Draw	Green 14110

Pipeline Identification		
ABBR.	Process/Service Line	Fed. Std. 595B Color
ODCVT	Odor Control Vent	Unpainted
O2	Oxygen	Red 11105
OZR	Ozone Recycle	Blue 15177
OZS	Ozone Supply	Blue 15080
OZVT	Ozone Vent	Blue 15180
PD	Plant Drain	Gray 16187
PW	Plant Water	Blue 15092
PTPM	Potassium Permanganate	Red 11140
PEFF	Primary Effluent	Gray 16251
PA	Process Air	Green 14115
RINF	Raw Influent	Gray 16293
RPS	Raw Primary Sludge	Olive 14151
RSC	Raw Screenings	Tan 16350
RAS	Return Activated Sludge	Tan 10260
SMP	Sampling Line	Depends on service
SLW	Seal Water	Blue 15182
SBP	Secondary Bypass	Gray 16473
SAR	Service Air (Plant Air)	Green 14193
SW	Service Water	Blue 15102
SHW	Sludge Heating Water	Orange 12473
NAOCL	Sodium Hypochlorite	Yellow 13591
SPW	Spray Water	Navy 15052
STA	Starting Air (Engine Air)	Green 14187
STMR	Steam Return (Condensate)	Tan 11670
STMS	Steam Supply	Orange 22356
STD	Storm Drain	Gray 16440
SULAD	Sulfuric Acid	Brown 10049

Pipeline Identification		
ABBR.	Process/Service Line	Fed. Std. 595B Color
SD	Sump Drain	Gray 16376
SU	Supernatant	Gray 16307
TS	Thickened Sludge	Brown 10070
TD	Thickener Drain	Gray 16187
TO	Thickener Overflow	Gray 16329
VCS	Vacuum Service	Green 14062
WAS	Waste Activated Sludge	Tan 13596
WDGS	Waste Digester Gas	Orange 22510
WML	Waste Mixed Liquor	Tan 12648
WO	Waste Oil	White 17925
WSC	Washed/Compacted Screenings	Black 14084

Note 1: The following colors shall be used for Mixed Sludge and Digester Sludge Recirculation

Digester No.	Color	Digester No.	Color
1	13531	5	10219
2	13522	6	10115
3	10324	7	10080
4	10371	8	10055

EXECUTION

1.19 LOCATION

A. Locate identification signs for piping along straight line runs at intervals of not more than 30 feet, near valves, branches and junction points and where pipes pass through walls or ceilings. Place direction-of-flow arrows as shown or required. Locate signs on large valves on or adjacent to the valve itself. Place all piping identification signs so as to be easily visible from operating locations. Locate nameplates on equipment bases and on structures at readily visible levels in such positions relative to the equipment and structures so as to prevent damage to the nameplate.

1.20 MOUNTING

A. Mount identification signs and arrows on piping parallel and tangent to the pipe and valves by fastening with screws, plastic or fiber washers, threaded brackets and banding straps and seals. Provide screws and brackets of stainless steel with 5/16 - 18 American Standard Coarse Threads; provide No. 25 U.S. gauge stainless steel, 3/4 inch wide bands.

B. Where pipe is insulated, use care in mounting the signs so to prevent the banding straps from crushing the insulation.

C. Provide mounting assembly "Steelbinder" strapping unit as manufactured by:

A.J. Gerrard & Co., Lake City, FL.

Independent Metal Strap, Roslyn, N.Y.

Or approved equal.

D. Mount nameplates in a manner specifically approved by the Engineer after the installation of equipment or construction of structures. Submit details of the method of fastening to the Engineer for approval. Provide fastening devices for nameplates and valves of stainless steel construction.

E. Mount valve identification signs with approved stainless steel brackets or approved stainless steel strapping in such a fashion that sharp corners or edges on signs, brackets, bolts, chain or strapping will not constitute a hazard to personnel operating the valves. Since it is impractical to detail each means of attachment in the Contract Drawings, each means of attachment will receive approval only on its own merits. Submit for approval sketches of each type proposed.

F. Do not attach identification tags or signs to handwheels. Use of flange bolts or bonnet bolts as a means of attachment of brackets will receive consideration. Provide all attachment devices and bolting of Type 304 stainless steel.

END OF SECTION

40 06 20 PIPING AND VALVE SCHEDULE

TABLE 40 06 20-1 – BURIED PIPING

Service	Location	Nominal Size (in.)	Material	Thickness / Schedule / Class	Type of Joint / Fitting	Pressure		Pipe Protection	
						Working (psig)	Test (psig)	Interior	Exterior
Flush Water Pipe	Underground Duct Bank	2	316L S.S.	Sch 80	Socket Weld	125	190	None	None
Hydraulic Process Pipe	Underground Duct Bank	3/4	316L S.S.	Sch 160	Socket Weld	3,000	4,500	None	None
Hydraulic Process Pipe	Underground Duct Bank	1	316L S.S.	Sch 160	Socket Weld	3,000	4,500	None	None
Hydraulic Casing Pipe	Underground Duct Bank	3	316L S.S.	Sch 40	Socket Weld	0	10	None	None

TABLE 40 06 20-2 – INTERIOR AND EXPOSED PIPING

Service	Location	Nominal Size (in.)	Material	Thickness / Schedule / Class	Type of Joint / Fitting	Pressure		Pipe Protection	
						Working (psig)	Test (psig)	Interior	Exterior
Flush Water Pipe	IG Building	4	Ductile Iron	Sch 56	Flanged	125	190	Cement Lined	Painted
Flush Water Pipe	IG Building and Chamber	2	316L S.S.	Sch 80	Threaded	125	190	None	None
Hydraulic Tube	IG Building and Chamber	3/4	316L S.S.	0.065”	Compression Fitting	3,000	4,500	None	None
Hydraulic Tube	IG Building and Chamber	1	316L S.S.	0.083”	Compression Fitting	3,000	4,500	None	None
Hydraulic Hose	IG Building and Chamber	3/4 I.D.	Parker 471ST	N.A.	Compression Fitting	3,000	4,500	N.A.	N.A.

SECTION 40 06 20 – PIPING AND VALVE SCHEDULE

SPECIAL WORKS – IG/PC

TABLE 40 06 20-3 – INTERIOR AND EXPOSED VALVES

Service	Location	Size (in.)	Type of Valve	Body Material	Type of Joint / Fitting	Pressure			Operator
						Working (psig)	Test (psig)	Rating (psig)	
Flushing System	IG Building	4	Ball	Stainless Steel	Flanged	125	150	200	Manual
Flushing System	IG Building	4	Ball	Ductile Iron	Flanged	125	150	200	Motorized (electric)
Flushing System	IG Building	4	Gate	Ductile Iron	Flanged	125	150	200	Manual
Flushing System	IG Building	4	Check	Ductile Iron	Flanged	125	150	200	N/A
Flushing System	IG Building	4	Hose Bib	Ductile Iron	Threaded	125	150	200	Manual
Flushing System	IG Chamber	1.5	Hose Bib	Stainless Steel	Threaded	125	150	200	Manual

Flushing System	IG Chamber	2 (with 0.8-in orifice)	Swivel Nozzle	Stainless Steel	Threaded	125	150	1000	N/A
Flushing System	IG Chamber	2	Ball	Stainless Steel	Threaded	125	150	200	Manual
Flushing System	IG Chamber	3	Air Release Valve	Stainless Steel	Flanged	125	150	200	Manual

All piping, tubing, hoses, and valves shall be labeled in accordance with Section 40 05 97 – Identification for Process Equipment.

40 60 01 PROCESS MONITORING AND CONTROL SYSTEM

GENERAL

1.01 Summary

A. Contractor shall provide all labor, materials, equipment and incidentals as shown, specified and required to furnish, install, calibrate, test, document and place in satisfactory operation a complete Process Monitoring and Control System (PMCS). System as specified and shown in the Contract. The system includes the following major equipment:

Control panels, operator interface terminals and Programmable Logic Controllers (PLC)

Field instruments

Distributed Control Units

System Communication and Interface Equipment

Other appurtenances as listed in the Contract Documents.

1.02 Payment

A. There is no separate payment provision for this section.

1.03 Related Sections

A. Not Used

1.04 References

A. The following organizations' standards shall be used as guides in assuring quality and reliability of components and systems; govern nomenclature; define parameters of configuration and construction, in addition to specific requirements of the Sections and Contract Drawings:

ANSI American National Standards Institute

API American Petroleum Institute

AWWA American Water Works Association

FM Factory Mutual

IEEE Institute of Electrical and Electronic Engineers

ISA Instrument Society of America

JIC Joint Industrial Council

MIL Military Standards

NEC National Electrical Code

NEMA National Electrical Manufacturers Association

NFPA National Fire Protection Association

NRC Nuclear Regulatory Commission

OSHA Occupational Safety and Health Administration

SAMA Scientific Apparatus Manufacturers Association

UL Underwriters' Laboratories, Inc.

1.05 Description

A. PMCS shall be designed to monitor, display process and equipment operating information and alarms and to perform various process and equipment control functions. The equipment and unit processes which the PMCS shall monitor and control are shown on the Drawings and described herein.

B. Process and Instrumentation Diagrams (P&ID's) and the Contract Documents illustrate and describe the overall PMCS functional and operational requirements.

C. Power Supplies:

All electrically powered equipment and devices shall be suitable for operation on 115 volt ±10 percent, 60 Hz ±2 Hz power. If a different voltage or closer regulation are required, a suitable regulator or transformer shall be provided.

Appropriate power supplies shall be furnished by Contractor for all two wire transmitters, loops for monitoring discrete inputs and all necessary outputs. Power supplies shall be mounted in enclosures and installed in the appropriate field panel.

Design all power supplies for a minimum of 130 percent of the maximum simultaneous current draw.

A power on-off switch or an air circuit breaker shall be furnished for each item requiring electrical power.

Provide isolation transformers, line voltage regulators and power distribution panels for the distributed digital portions of the plant monitoring and control system to eliminate electrical noise and/or transients entering on the primary power line.

D. Signal Requirements:

The control system shall be designed to use 4 to 20 madc analog signals, unless otherwise specified.

Signal converters and repeaters shall be provided where required and in addition analog inputs to the distributed control system shall be through appropriate repeaters to provide signal isolation where series looped with other devices and to allow the loop to maintain integrity even if the distributed control system is out of service. Power supplies shall be sized adequately for signal convertor and repeater loads.

Signals shall be isolated from ground.

Signals shall not have a transient dc voltage exceeding 300 volts over one millisecond nor a dc component over 300 volts.

The system and associated input/output wiring will be used in a plant environment where there can be high energy ac fields, dc control pulses, and varying ground potentials between the sensors/transducers or input contact locations and the system components. The system design

shall be adequate to provide proper protection against interferences from all such possible situations.

E. Miscellaneous:

All instrumentation and PMCS components shall be heavy duty types, designed for continuous service in a municipal treatment plant environment. The system is to contain products of a single manufacturer, when possible, and to consist of equipment models which are currently in production. All equipment provided is to be of modular construction and to be capable of field expansion through the installation of plug-in circuit cards and additional cabinets as necessary. Design all logic and control loops to fail safe.

All instrumentation and PMCS components shall be designed to return automatically to accurate measurement within 15 seconds upon restoration of power after a power failure or when transferred to standby power supply.

Surge protection shall be provided for all instruments and all other control system components which could be damaged by electrical surges.

All field-mounted instruments and system components shall be designed for installation in humid and corrosive service conditions. All field mounted instrument enclosures, junction boxes and appurtenances shall conform to NEMA 4X requirements unless otherwise specified.

All relays with interconnections to field devices shall be wired through terminal blocks. Terminals as part of the relay base are not an acceptable alternate.

All panel mounted instruments, switches, and other devices shall be selected and grouped for functionality and arranged to present a pleasing coordinated appearance. All front of panel mounted devices shall be of the same manufacturer and model line.

All components furnished, including field and rear of panel instruments, shall be tagged with the item number and nomenclature indicated on the Contract Documents and/or approved Shop Drawings.

Ranges and scales specified herein shall be coordinated to suit equipment actually furnished.

Field-mounted devices shall be treated with an anti-fungus spray.

Field-mounted devices shall be protected from exposure to freezing temperatures.

F. Environmental Conditions:

The control system shall be designed and constructed for continuous operation under the following temperature and humidity conditions:

a. Control Rooms:

1) Ambient Temperature: 60°F to 80°F normal range; 40°F to 105 F occasional maximum extremes.

2) Relative Humidity: 80 percent, normal; 95 percent maximum.

b. Indoor locations for digital processing equipment hardware, control panels and instruments:

1) Ambient Temperature: 40°F to 120°F.

2) Relative Humidity: 98 percent maximum.

c. Outdoor locations for instruments:

1) Ambient Temperature: -10°F to 120°F.

2) Relative Humidity: 100 percent maximum.

G. System Designs:

Range, scale and setpoint values specified in other Division 40 sections are for initial setting and configuration. Coordinate these values with actual equipment furnished to implement proper and stable process action as systems are placed in operation.

For any items where ranges, scales and setpoints may not have been specified, Contractor shall submit a recommendation to The Engineer for review.

1.06 Quality Assurance

A. General:

The Contractor must employ the services of a specialty firm (“the Supplier”) to supply the PMCS system.

The Contractor will retain the responsibility for providing a complete and integrated system.

The Supplier shall identify those system components which are not of the Supplier’s manufacture.

The Supplier shall supply the company's quality assurance plan, and for components which are not of the Supplier’s manufacture, the component manufacturer's quality assurance plan. The plans shall include but not necessarily be limited to: method of construction and testing, raw material criteria, methods of documentation, station control, "Burn-In", final tests and serialization coding and packaging. Said plans shall be in accordance with M.I.L.-105D.

B. Supplier's Qualifications:

Supplier shall be a financially sound firm having at least five years continuous experience in designing, implementing, supplying and supporting instrumentation and control systems which are comparable to the PMCS in terms of hardware, software, cost and complexity.

Supplier shall have manufactured and supported standard lines of digital processing and control equipment and application software continuously for the last five (5) years.

Supplier shall have in existence at the time of bid advertisement, an experienced Engineering and technical staff capable of designing, implementing, supplying and supporting the PMCS and handling the PMCS submittal and training requirements.

Supplier shall have a minimum of two (2) years’ experience in operator interface software configuration and hardware application and programming of programmable logic controllers and data highway systems.

Supplier shall provide standard course offerings in general process control applications and in operation, programming and maintenance of the control system and equipment at a facility specifically utilized for training purposes. The facility shall have been in operation continuously for the last two (2) years.

Supplier shall have a system of traceability of the manufactured units and purchased components through production, assembly and testing.

Supplier shall have a system of "Burn-In" for all components and available supportive documentation.

Supplier shall have a demonstrated record of prompt response to field failures.

Supplier shall have a documented program of failure analysis.

Supplier shall have a UL approved panel shop.

Supplier shall have a record of prompt shipments in accordance with contract obligations required for previous projects.

C. Technical Proposal Requirements:

General: The Contractor shall submit a copy of a Technical Proposal from the supplier which they have selected to provide the PMCS. The proposal shall be complete and contain all information as specified below.

Financial Statement: Include the value of distributed based control systems delivered during the last two fiscal years. Also include the value of other process instrumentation and controls shipped during the period.

Experience:

a. Provide evidence of compliance with the specific experience requirements listed in Article 1.05.B. above in the form of an experience certification signed by an officer of the company.

b. Describe at least three completed municipal projects utilizing instrumentation and control equipment identical to or similar to (indicate which) that specified. Indicate project name, value, completion date, names and phone numbers of projects' representatives familiar with each project. Letters of recommendation may be submitted.

c. Furnish list of last ten projects completed.

Personnel: Provide a listing of those personnel committed to be assigned to the project. List shall include project manager, project engineer, field representative, local service representative, and sales representative. Indicate addresses of personnel not based at supplier's main office. Provide documentation including resumes of personnel demonstrating experience in wastewater treatment applications.

Exceptions: List all exceptions and deviations from the requirements of these Sections and/or any of the Contract Drawings. Reference section number, article, and paragraph of proposed variance and provide an explanation of why and how the proposed substitution meets or exceeds the functional or equipment requirements specified.

Shipment Records: Provide evidence of timely delivery of equipment on past projects.

Distributed Control System Hardware and Software:

d. Provide a general system configuration drawing and include designations for model numbers and types of the proposed distributed control system and all other proposed system components.

e. Provide descriptive literature and manufacturer's catalog information covering all aspects of the hardware design and software functions and capabilities of the specific distributed control system and data highway system proposed for the PMCS.

Hardware and Software:

f. Provide descriptive literature and catalog information covering the features and capabilities of all proposed hardware components.

g. Describe standard software packages proposed, including any customized software required to meet the functional intent of the system specifications. Descriptions shall address the following:

1) Examples of graphic displays, methods of display access and procedures for display definition and generation, including use of the standard symbols library and capabilities for generating and storing user defined symbols in the symbol library.

2) Alarm handling software features and capabilities including an alarm display example, methods of defining alarms and alarm files, acknowledgements and return to normal conditions, chronological sorting and time-tagging of alarms, and alarm file maintenance utilities.

3) Distributed system programming and documentation software features and capabilities, including screen display and printout examples for a fully annotated and cross-referenced ladder diagram and the ladder diagram elements.

Instrumentation and Panel Mounted Devices: Provide descriptive literature and catalog cuts for each type of sensor, transmitter, indicator, and other such devices required by the project.

Training: Provide information and literature as to the organization proposed and the factory facilities to be utilized for the training specified. Indicate the qualifications of the factory training staff.

Availability Demonstration: Indicate how the Availability Demonstration will be accomplished.

Maintenance: Provide the following information:

h. Location of service facility along with minimum and maximum response time.

i. Location of parts facility with delivery time and method.

D. Supplier's Responsibility

Contractor shall retain the PMCS Supplier to assume the responsibilities specified below. However, execution of these specified duties by the Supplier shall not relieve Contractor of ultimate responsibility for the PMCS.

a. Fabrication, implementation and applications programming of the PMCS and all subsystems in accordance with the Contract Documents and all referenced standards and codes.

b. Preparation, assembly and correction of all PMCS submittals in accordance with the Contract Documents.

c. Proper interfacing of the PMCS hardware, software, field devices and panels, including required interfacing with packaged control systems furnished by other equipment suppliers, and with the plant electrical system.

d. Supervision of the installation of PMCS, instruments, panels, cabinets, wiring and other components required.

e. Calibration, testing and start-up of the PMCS.

f. Training of City personnel in operation and maintenance of the PMCS.

g. Handling of all warranty obligations for the control system components.

h. Maintenance of two reproducible copies of the complete system and running software at the supplier's facility for the duration of the warranty period. Software copies shall be maintained on the bulk storage medium used by the supplier for system program development and shall be directly loadable on the supplied system.

E. Coordination and Progress Meetings

Contractor shall be responsible for the scheduling and coordination of the system installation with regard to all other work on the site. Said coordination shall be documented on the project schedule. The purpose of the meetings shall be to review the progress of the Work involving the PMCS and provide coordination for installation of the equipment to ensure construction schedules are met.

Routine progress and coordination meetings will be scheduled by The City. Contractor and a representative of the Supplier shall be required to attend a minimum of one meeting per month for the length of contract.

Representatives at the meetings shall have the competence and authority to make any and all necessary decisions. Decisions and statements made at the meetings shall commit Contractor and Supplier to agreed procedures and schedules.

F. System Supplier Project Personnel: Contractor shall require the Supplier to provide the following project personnel:

Project Manager:

a. The Supplier shall appoint a project manager who shall coordinate and schedule all work and assure that project schedule is met.

b. The project manager shall act as the liaison with Contractor for the installation of the monitoring and control system equipment and shall assist in all matters required for proper coordination and interfacing of the equipment and processes.

Field Engineer:

c. The Supplier shall appoint a Field Engineer with responsibilities as follows:

1) Provide advice and technical consultation relative to installation techniques and procedures for equipment furnished.

2) Installed system checkout, calibration, adjustment and start-up including tuning of every control loop.

3) Maintenance services during availability demonstration.

4) Involvement in the on-site system training of plant personnel.

5) Resolving of control problems encountered during initial start-up and testing of all plant monitoring and control equipment.

d. The field engineer shall have a minimum of five years' experience in systems engineering and start-up and shall have a thorough working knowledge of both the hardware and software supplied for the PMCS.

Training personnel as described in Article 1.19.

1.07 Submittals

A. Shop Drawings:

General:

a. Shop Drawing preparation shall not commence until after the pre-submittal conference specified below.

b. Manufacture of the PMCS shall not commence until related submittals have been approved by The City.

c. Shop Drawings shall be submitted in complete packages grouped to permit review of related items.

Pre-Submittal Conference:

d. Contractor shall arrange and conduct a pre-submittal conference on the control system within 45 days of notification of preliminary acceptance of the proposed PMCS and Supplier by Engineer.

e. Pre-submittal conference shall be attended by representatives of Contractor, City, the PMCS Supplier, and Engineer. Contractor shall allot one full working day for the conference.

f. Purpose of the pre-submittal conference shall be to review informally and approve the manner in which the Supplier intends to respond to the Contract requirements before any submittals are prepared.

g. Contractor shall prepare the items listed below for presentation at the pre-submittal conference. The information shall be submitted to The City three weeks prior to the date of the conference.

1) List of equipment and materials required for the control system and the brand and model which Contractor proposes to use for each item.

2) List of proposed exceptions to the Contract Documents along with a brief explanation of each. Approval shall be subject to a formal submittal.

3) Sample of each type of submittal specified herein. These may be submittals prepared for other projects.

4) A flow chart showing the steps to be taken in preparing and coordinating each control system submittal to The City, and a list of proposed submittals.

5) Bar chart type schedule for all PMCS related activities from the pre-submittal conference through start-up and training. Particular emphasis shall be given to dates relative to submittals, design, fabrication, programming, factory testing, deliveries, installation and field testing. The schedule shall be subdivided to show activities relative to each major item or group of items when everything in a given group is on the same schedule.

6) General outline of the type of tests to be performed to verify that all sensors/transducers, instruments and digital processing equipment are functioning properly.

Submittal Requirements:

h. Product information for all sensors/transducers and field and panel instruments. Include the following:

1) Manufacturer's product name and model number

2) Instrument tag number from Contract Documents

3) Manufacturers standard catalog product data

4) Description of construction features

5) Performance and operation data

6) Installation and mounting details, instructions and recommendations

7) Service requirements

8) Dimensions

i. Distributed Control System Information:

1) System Description:

a) Detailed block diagram showing system hardware configuration and identifying model numbers of system components.

b) Software language and organization.

c) Format, protocol and procedures for data highway communications and local communications with input/ output modules and peripheral devices.

d) Human-machine interfacing (HMI) details.

e) Control and failure modes.

f) On-line and off-line capabilities for programming, system utilities and diagnostics.

g) Input/output point listing with I/O module cross reference identification for each distributed controller.

h) Data base listing including all input/output points.

i) Suggested detailed format and configuration of all log reports, alarm summaries, printer outputs, CRT displays and graphics.

j) List of spare parts and test equipment.

2) Equipment Hardware:

a) Layout drawings showing front, rear, end and plan views to scale of all processing equipment, I/O components, power supplies and peripheral devices.

b) Construction details, features and procedures.

c) Interconnection diagrams including termination details, cable identification list and cable length.

d) Plans showing equipment layout in control panels.

e) Installation requirements, instructions and/or recommendations.

3) Software Description:

a) Standard technical documentation covering all aspects of the distributed control system software functions and capabilities, including instruction set description and programming procedures related to control, monitoring, display, logging, reporting and alarming functions.

b) Standard technical and instructional documentation covering software for utility, system support, system documentation, display, communications, data logging and storage and diagnostic functions.

c) Detailed functional descriptions of application programs explaining control, display, logging and alarming features to be provided and functions to be performed.

d) Documentation describing memory type, size and structure and listing size of system memory, I/O and Data Table memory and size of memory available for control programs. Also define estimated control program memory requirements and processor execution times and program scan times.

e) Documentation describing central monitoring station main and secondary memory type size and requirements to perform the display, logging, reporting and alarming functions required.

j. Panels, Consoles and Cabinets Information:

1) Layout Drawings, include the following:

a) Front, rear, end and plan views to scale.

b) Dimensional information.

c) Tag number and functional name of components mounted in and on panel, console or cabinet.

d) Product information on all panel components.

e) Nameplate location and legend including text, letter size and colors to be used.

f) Location of anchoring connections and holes.

g) Location of external wiring and/or piping connections.

h) Mounting, support and installation details.

i) Proposed layouts and sizes of graphic display panels.

j) Calculations for heating and cooling.

2) Wiring and/or piping diagrams, include the following:

a) Name of panel, console or cabinet.

b) Wiring sizes and types.

c) Piping sizes and types.

d) Terminal strip numbers.

e) Color coding.

f) Functional name and manufacturer's designation for components to which wiring and piping are connected.

3) Electrical control schematics in accordance with JIC standards.

4) Plan showing equipment layout in each area.

k. Field piping diagrams, include the following:

1) Piping sizes and types.

2) Location, functional name and manufacturer's designation of items to which piping is connected.

l. Instrument loop diagrams for all analog and digital display, control and I/O loops prepared using ISA standard symbols in accordance with ISA standard S5.4, include the following:

1) Instrument tag numbers from Contract Documents.

2) Functional name of each item.

3) Manufacturer's model, product, or catalog number for each item.

4) Location of each item.

5) Software references for all points.

m. Distributed Control System I/O Loop Wiring Diagrams: Prepare drawings on a module-by-module basis and include the following information:

1) Rack numbers, slot number, module type and module terminal point numbers. Also include location and identification of all intermediate panel terminal block and strip numbers to which I/O wiring and power supply wiring is connected. Identify all power supply circuit numbers and ratings.

2) Wiring sizes, types, wire numbers and color coding.

3) Location, functional name, tag numbers and manufacturer model numbers of panel and field devices and instruments to which I/O wiring is connected. For discrete I/O devices use JIC electrical symbols tagged with designation shown on P&I drawings.

n. System Software Documentation: Prepare and submit two copies of preliminary software documentation at least four weeks prior to expected initiation of factory testing. Submittal shall be for City information only and shall not be subject to formal approval. Software documentation shall include the following as a minimum:

1) Complete hard copies of all ladder diagram programming. Documentation shall include complete external and internal I/O coil, contact and signal cross referencing, addressing and rung numbering. Documentation shall clearly distinguish between internal and real I/O and shall also incorporate extensive English language to identify all contact, coil and signal functions and for labeling and description of program, sub-program and rung purpose and action.

2) Complete listing of external and internal I/O address assignments, register assignments and preset constant values

along with functional point descriptions. Also list all unused/undefined I/O and data table registers available.

3) Complete hard copies of all program documentation for all types of programs.

4) Detailed system memory map defining memory segments used and spare memory segments available for system memory, I/O tables, Data Tables and control program.

5) Complete database listing including listings for log, report and alarm file setups.

6) Hard copies of all system graphic displays and formats for all logs, reports and the alarm summary.

7) User's manuals describing procedures and providing examples for use of operator's consoles, workstations and programming terminal, accessories and system utility routines to perform control, display and logging program generation, program modification, program verification, diagnostics, program documentation, loading and backup and other required system support functions.

8) Graphic Displays: Submit samples of each type of display including proposed colors to be used for process equipment and piping.

B. Control System Operation and Maintenance Manuals:

Furnish O&M manuals for the PMCS in accordance with the Contract Documents, and the supplemental requirements below:

The O&M manuals shall include the following:

a. Name, address and telephone number of the Supplier's local service representative.

b. Complete list of supplied system hardware parts with full model numbers referred to system part designations, including spare parts and test equipment provided.

c. Copy of all approved submittal information and system Shop Drawings as specified herein with corrections made to reflect actual system as tested and delivered to the site for installation. Half-size black line reproductions shall be provided for all Shop Drawings larger than 11 by 17 inches.

d. Complete up-to-date system software documentation.

e. Manufacturer's Original Copies of Hardware, Software and Installation, Assembly and Operations Manuals for the distributed control system central monitoring station and peripheral devices, and all other control system components. Manuals shall include the following information:

1) General descriptive information covering the basic features of the equipment.

2) Physical description covering layout and installation requirements and all environmental constraints.

3) Functional and operational descriptions covering the procedures for programming, operation, start-up, shutdown, and calibration of the distributed control system equipment and explaining how the various control functions are performed.

4) Principles of operation explaining the logic of operation; provide information covering operation to a component level.

5) Maintenance procedures covering checkout, troubleshooting, and servicing; checkout procedures shall provide the means to verify the satisfactory operation of equipment, troubleshooting procedures shall serve as a guide in determining faulty components and servicing procedure shall cover requirements and recommended time schedule for calibration, cleaning, lubrication and other housekeeping and preventive maintenance procedures.

6) Wiring, schematic and logic diagrams.

7) Safety considerations relating to operation and maintenance procedures.

C. Record Drawings and Documentation:

Contractor shall revise all system drawings, submittals and software documentation to reflect as-built conditions in accordance with the requirements of the Contract Documents and the supplemental requirements below.

14 copies of all revised Shop Drawings and documentation shall be submitted to the the City to replace out-dated drawings and documentation contained in the System O&M Manuals per the Contract Documents. Half-size black line sets shall be provided for all drawings larger than 11x17. Specific instructions for out-dated drawing removal and replacement shall be provided with the record drawing submittal.

Half-size black line prints of wiring diagrams and any program or configuration printouts applicable to each control panel shall be placed inside a clear plastic envelope and stored in a suitable print pocket or container inside each control panel.

D. Reports: 14 copies of the following reports shall be submitted to the City.

Factory Test Procedures and Reports as described in Article 1.14.

Installation Inspection, Field Calibration, and Field Testing Reports as specified in Article 1.18

Training plan as described in Article 1.19.

1.08 Delivery, Storage, and Handling

A. PMCS equipment shall be packaged at the factory prior to shipment to protect each item from damage during shipment and storage. Containers shall be protected against

impact, abrasion, corrosion, discoloration and/or other damages. Clearly label contents of each container and provide information on the required storage conditions necessary for the equipment. Keep City informed of equipment delivery.

B. Transportation and handling of the PMCS equipment and appurtenances shall comply with the requirements of the Contract Documents, and requirements of equipment manufacturers.

C. Protection of PMCS materials and equipment shall comply with the requirements of the Contract Documents and with manufacturer's instructions and relevant organization standards.

1.09 Spare Parts, Special Tools, and Supplies

A. Not Used

1.10 Special Warranty Provisions / Guarantee Periods

A. Not Used

PRODUCTS

1.11 Manufacturers

A. Not Used

1.12 Materials / Equipment

A. Not Used

1.13 Fabrication / Assembling / Finishes

A. Not Used

1.14 Source Quality Control / Shop Tests

A. Factory Testing

General Requirements

a. Factory testing shall be performed before shipment at the manufacturer's facility to verify that system components are functioning properly and that they meet the functional and performance requirements of the Contract Documents.

b. Contractor shall submit information on factory testing procedures to verify that testing shall fulfill the requirements as specified herein. Submittal shall be made at least two months in advance of any scheduled testing and shall include dates of scheduled tests.

c. Contractor shall notify the Engineer in writing at least 45 days before expected initiation of tests. Engineer shall be present at Contractor's facilities during operational test of system equipment, either for individual units or as an integrated system. Presence of Engineer

during testing does not relieve Contractor from conforming to the requirements of the Contract Documents and shall in no way imply acceptance of the equipment.

d. If the need should arise to retest the system or any part thereof and witnessing is deemed necessary, the Contractor shall be responsible for the same associated costs as aforementioned.

e. When the factory tests have been successfully completed, a report shall be submitted to the Engineer. The equipment shall not be shipped until Notice Of Acceptance of the test is received by the Contractor.

All panels, consoles and cabinets shall be inspected. Inspection shall include, but not be limited to the following:

f. Nameplates and tags

g. Wire sizes and color coding

h. Terminal block contact ratings and numbers

i. Annunciator and terminal block spares

j. Proper wiring practices and grounding

k. Enclosure flatness, finish and color

System Hardware Operational Testing

l. All input/output devices and components shall be tested to verify operability and basic calibration.

m. All system hardware components equipment shall be tested to verify proper operation of the equipment as stand alone units. Test shall include, but not be limited to, the following:

1) AC/DC power checks

2) Power fail/restart tests

3) Diagnostics checks

4) Test demonstrating that all specified equipment functional capabilities are working properly.

n. All system components shall be tested to verify that communication between units is working properly.

o. An integrated system test with all system equipment connected (excluding field sensors and instruments) shall be performed to verify that all equipment is performing properly as an integrated system.

System Software Demonstration

p. Contractor shall demonstrate all system software utility and security programs incorporated into the system to illustrate the various functions and capabilities specified.

q. Contractor shall demonstrate the operation and display of all software based on a simulation of 5 percent of total input/output count, both analog and discrete, as selected by the manufacturer. In addition, Engineer shall randomly select, at the time of the test, additional inputs and outputs to be simulated in an amount approximately equal to 5 percent of total input/output count. Demonstration shall show that the monitoring and control application software associated with the input/output points performs the functions intended.

r. System performance shall be tested using a fully integrated system, including all software and hardware if applicable. To achieve this, the entire control system, including all the peripheral devices and all interconnecting cables, shall be assembled on the factory test floor and simulated inputs applied. The Contractor shall carry out a full system test, during which the entire system shall operate continuously without failure in accordance with the requirements of the Sections and Drawings.

s. Contractor shall provide process I/O simulation panel prior to the test:

1) Toggle switches to simulate field or other input contacts

2) Indicating lights to simulate outputs from tested panels

3) Control relays to simulate MCC coil inputs

4) Time relays to simulate position switches

5) Indications (mA) to indicate every 4-20 mA output from tested panel

6) Potentiometers to simulate 4-20 mA inputs to tested panel

t. Every device shall have nameplate with description and device's P&ID tag number. Nameplates shall be removable and interchangeable for multiple use of panel during the test.

u. Demonstration of communication between PLC's shall be included in the Test Procedure where applicable.

v. Operator Interfaces: Prior to the staging and testing of the system, the display environments shall have been configured per the agreed upon display structure, loaded and data base parameters linked to the specified fields. During this phase of the factory acceptance test, the overall display structure shall be demonstrated, including environment configurations, passwords, security, etc. The memo display contents shall be reviewed to demonstrate how an operator navigates within the overall display structure. The assignment of displays to annunciator keys shall also be demonstrated. Each graphic display shall be reviewed for correctness in terms of the layout, symbols, color scheme, etc. The operation of standard alarm management displays (Current Alarm Display, Alarm History, etc.) shall also be demonstrated. A

demonstration of each type of report specified shall be performed. Printing shall be an integral part of the report demonstration.

EXECUTION

1.15 Examination / Preparation

A. Not Used

1.16 Installation

A. Not Used

1.17 Field Testing / Quality Control

A. Not Used

1.18 Startup / Demonstration

A. System Start-Up and Field Testing

The Contractor shall supervise and/or perform check-out and start-up of all system components. As part of these services, the Contractor shall include for those equipment items not manufactured by them the services of an authorized manufacturers' representative to check the equipment installation and place the equipment in operation. The manufacturers' representative shall be thoroughly knowledgeable about the installation, operation and maintenance of the equipment.

System Checkout and Start-up

a. The Contractor, and other equipment/instrument suppliers as applicable, shall perform the following:

1) Check and approve the installation of all PMCS components and all cable and wiring connections between the various system components prior to placing the various processes and equipment into operation.

2) Conduct a complete system checkout and adjustment, including calibration of all instruments, tuning of control loops, checking operation functions, and testing of final control actions. When there are future operational functions included in this work, they should be included in the system checkout. All problems encountered shall be promptly corrected to prevent any delays in start-up of the various unit processes.

b. The Contractor shall provide all test equipment necessary to perform the testing during system checkout and start-up.

c. The Contractor shall be responsible for initial operation of monitoring and control system and shall make any required changes, adjustment or replacements for operation, monitoring and control of the various processes and equipment necessary to perform the functions intended.

d. The Contractor shall furnish to the Engineer certified calibration reports for field instruments and devices and panel mounted devices as soon as calibration is completed.

e. The Contractor shall furnish the Engineer an installation inspection report certifying that all equipment has been installed correctly and is operating properly. The report shall be signed by authorized representatives of Contractor.

B. Integrated System Field Test

Following the PMCS checkout and initial operation, the Contractor, shall perform a complete system test to verify that all equipment and programmed software is operating properly as a fully integrated system, and that the intended monitoring and control functions are fully implemented and operational. Any defects or problems found during the test shall be corrected by Contractor and then retested to demonstrate proper operation.

Following demonstration of all system functions, the PMCS including field sensors/transducers and instruments shall be running and fully operational for a continuous 48 hour period. The Operational Availability Demonstration specified below shall not begin until the continuous 48 hour integrated system test has been successfully completed and the City agrees that the Operation Availability Demonstration can begin.

C. Operational Availability Demonstration

Operational Availability Demonstration (OAD) shall begin following completion of the integrated system field test as specified above and shall continue until a time frame has been achieved wherein the system (both hardware and software) availability meets or exceeds 99.9 percent for 15 consecutive days and no system failures have occurred which result in starting the OAD over again. During the OAD the system shall be available to plant operating personnel for use in normal operation of the plant.

For the purpose of the OAD the system will be defined as consisting of all operator interfaces and connected PLC's

The conditions listed below shall constitute system failures which are considered critical to the operability and maintainability of the system. The OAD shall be terminated if one or more of these conditions occur. Following correction of the problem, a new 15 consecutive day OAD shall begin.

a. Failure to repair a hardware or software problem within 120 consecutive hours from the time of notification of a system failure.

b. Recurrent hardware or software problems: if the same type of problem occurs three times or more.

c. Software problem causing a processor to halt execution.

The following conditions shall constitute a system failure in determining the system availability based on the equation specified in below.

d. Failure of any operator interface or PLC.

e. Loss of communications between devices on the communications network.

f. Failure of one or more input/output components.

g. Failures of any type affecting ten or more input/output points simultaneously.

h. Failure of any type affecting one or more regulatory control loops or sequential control strategies thereby causing a loss of the automatic control of the process variable or process sequence operation.

i. Failure of power supply. Where redundant power supplies are provided, failure of one power supply shall not constitute a system failure provided the backup power supply operates properly and maintains supply power. Failure of the backup supply to operate properly and maintain supply power shall constitute a system failure.

j. Failure of three or more primary sensors/transducers or field instruments simultaneously.

The system availability shall be calculated based on the following equation:

$$A = \frac{TTO}{TTO + TTR} \times 100\%$$

where:

A = system availability in percent

TTO = total time in operation

TTR = total time to repair

Time to repair shall be the period between the time that Contractor is notified of a system failure and the time that the system has been restored to proper operation in terms of hours with an allowance for the following dead times which shall not be counted as part of the time to repair period.

k. Actual travel time for service personnel to get to the plant site up to 6 hours per incident from the time Contractor is notified of a system failure.

l. Time for receipt of spare parts to the plant site once requested up to 24 hours per incident. No work shall be done on the system while waiting for delivery of spare parts.

m. Dead time shall not be counted as part of the system available period. The dead time shall be logged and the duration of the OAD extended for an amount of time equal to the total dead time.

Completion of a 15 consecutive day period without any restarts of the OAD and with a system availability in excess of 99.99 percent will constitute acceptance of the PMCS by City.

All parts and maintenance materials required to repair the system prior to completion of the OAD shall be supplied by Contractor at no additional cost to City. If parts are obtained from the required plant spare parts inventory, they shall be replaced to provide a full complement of parts as specified.

A Plant Monitoring and Control System Malfunction/Repair Reporting Form shall be completed by the plant personnel and the City to document system failures, to record Contractor notification, arrival and repair times and Contractor repair actions. Format of the form shall be developed and agreed upon prior to the start of the OAD.

1.19 Adjusting / Protection / Cleanup

TRAINING

A. Training

General Requirements

a. The Contractor shall retain the services of authorized representative of the equipment manufacturer to provide operation, and maintenance training for all plant monitoring and control system equipment at times acceptable to the Engineer as specified herein.

b. The manufacturer's representative shall be fully knowledgeable in the operation and maintenance of the equipment.

c. The Contractor shall be responsible for all costs associated with training and shall provide all required materials including training facility rental, computers, simulators, texts and required supplies.

d. The Contractor shall provide classroom training at a local training facility or Conference Center off-site and within a 20 mile radius of the work site. All costs associated with providing a local training facility shall be paid by the Contractor.

e. All training shall be conducted during the hours of 8:00AM to 12:00 AM until conclusion of the training course. All training sessions shall be provided twice and shall be scheduled by the City to accommodate their shift schedule.

Within 90 days of the effective date of the Notice to Proceed, Contractor shall submit the plan for training. Included in the plan shall be course outlines and schedules for training to be provided.

Off-Site Training

f. The Contractor shall provide a supplier who shall perform standardized, structured training courses at training facility staffed with regular full time training instructors covering both operation and maintenance of the system equipment furnished by the supplier.

g. All training shall be scheduled so that it has been completed prior to System Acceptance by the City.

h. The City will send the following personnel to attend training courses:

1) Operations Training: 30 persons

2) Maintenance Training: 10 persons

3) System supervisor/Engineer Training: 10 persons

i. Operator Training Course

1) Provide a one week (5 days, 8 hours per day) course covering the structure and the functions of the PMCS components and devices. The course shall familiarize the student with the procedures for applying the system to process control problems and develop student programming capability.

   a) As a minimum, the course shall cover the following topics:

   b) Overview of systems functional capabilities

   c) Equipment overview including system component functions, operating principals and proper use

   d) Loading and start-up of the digital system hardware components

   e) Use of system commands

   f) Development of programs and control schemes

   g) Development and use of system displays

   h) Programming concepts and techniques

   i) Use of bulk storage device for system backup

j. Maintenance Training Course

1) Provide a 20-hour course covering preventive and trouble-shooting maintenance for the system components. The course shall familiarize the student with diagnostic capabilities of the system, both software and hardware, and also the routine maintenance procedures on the system and the common peripheral devices. Total training hours: 40.

2) As a minimum the course shall cover the following topics:

   a) System overview description including the power subsystems and logic components of the processor bus

   b) Description of the maintenance and trouble-shooting aids of the system including software diagnostic programs

   c) Description of all bus operations

   d) Description of peripheral and process interface devices

   e) The use of hardware diagnostic routines, test equipment and test procedures as required to enable the City's personnel to detect and isolate system faults to the circuit board or module level and to implement repairs by replacing failed circuit boards or modules.

k. System Supervisory/Engineer Training

1) Provide a 8-hour manufacturer's standard training in the use and configuration of the specified HMI software. An instructor certified by the software manufacturer to furnish such training shall perform this training. Total training hours: 16.

2) System supervisor/engineer training shall be performed a minimum of 30 days prior to system startup.

3) Training shall be provided in the following subjects:

   a) System overview and capabilities

   b) Database configuration

   c) Graphic display configuration, including linking of data to displays

   d) Historical data configuration (collection, manipulation, and display)

   e) Real-time and historical trending

   f) Report configuration, generation, printing, and customization

   g) Alarm configuration and management

   h) System security

   i) I/O driver use and configuration

   j) System backup and recovery

   k) DDE linking, where applicable

   l) System command language

   m) Trouble-shooting

   n) System optimization

   o) System startup and shutdown procedures

   p) LAN and WAN communications, as appropriate

4) The course shall be structured as follows:

   a) Fundamentals: An 8-hour course (minimum) shall be provided which shall serve as a digital control system familiarization course for project management personnel, engineers, and key operating/maintenance personnel. This course shall be a prerequisite for the advanced course described below in Item 2.

   b) Advanced: A 24-hour course (minimum) digital system configuration and operating course shall be provided. The level of training shall be sufficient to familiarize the City personnel with the configuration and application of

all system programs. All essential system operating procedures shall be described as required to enable the City personnel to operate the system via the various work stations and local control panels.

On-site Training

l. Primary Sensors/Transducers and Field Instruments:

1) Provide on-site operation and maintenance training by the equipment manufacturer representatives prior to placing the equipment in continuous operation. The services of equipment manufacturer's representatives shall be provided for a minimum of eight (8) hours for each type of instrument provided.

2) Training shall accomplish the following:

a) Provide instruction covering use and operation of the equipment to perform the intended functions.

b) Provide instruction covering procedures for routine, preventive and trouble-shooting maintenance including equipment calibration.

c) Explain procedures for placing the equipment in and out of operation and explain necessary actions and precautions to be taken regarding the overall plant monitoring and control system.

m. Training covering control equipment:

1) The Contractor shall provide 80 hours of operations training covering all system components.

2) Training course shall accomplish the following:

a) Provide all instructions necessary to operate and utilize all system components.

b) Provide all instruction necessary to monitor and control the system processes from the designated control panel.

c) Explain procedures for control of the system during scheduled or rescheduled shutdown and the subsequent start-up.

d) Provide instructions for regular caretaking operations.

n. PLC Training: The Contractor shall provide 16 hours of training that covers PLC as follows:

1) Provide an overview of system hardware and software.

2) It shall train people in configuration, operation and programming PLCs.

3) The emphasis shall be placed on how to perform set point changes, minor programming changes, range changes, diagnostics and upkeep of documentation.

4) Instruction for hardware and software maintenance, trouble shooting and maintenance planning.

o. Training following 15 days of regular system operations:

1) The system supplier shall provide operation and maintenance covering all system equipment provided.

2) The training shall be of the same format, content and duration as the training described in items 1, 2 and 3 above.

END OF SECTION

40 61 13 PMCS GENERAL REQUIREMENTS

GENERAL

1.01 Summary

A. The Contractor shall provide all labor, materials, equipment and incidentals as shown, specified and required to furnish, install, calibrate and place in operation a complete PMCS. The PMCS shall be as specified in this Section, the Sections listed in the Related Sections of this Section, and as shown on the Contract Drawings.

B. PMCS shall be designed to control, monitor, store, display and log process and equipment operating information and alarms and to perform various control functions and generate various alarms.

C. The unit processes which the PMCS shall control and monitor are shown on the Contract Drawings and described herein.

D. Contractor shall coordinate with all PMCS equipment manufacturers to insure that all control and instrumentation signals are incorporated properly.

E. P&IDs and Specifications of this Section and the Related Sections of this Section illustrate and describe the overall PMCS functional and operational requirements.

1.02 Payment

A. There is no separate payment provision for this Section.

1.03 Related Sections

A. Section 26 05 53 - Identification for Electrical Systems.

B. Section 26 29 13 - Enclosed Controllers

C. Section 40 61 93 - PMCS Input/Output List

D. Section 40 61 96 - PMCS Control Strategies

E. Section 40 78 90 - PMCS Panel Mounted Instruments and Devices

1.04 References

A. Definitions

AI - Analog Input

AO - Analog Output

Area Process - Area Processes comprising a number of unit processes grouped either because of their similar equipment operation or similar function in a Plant. Area Process also comprise groupings of dissimilar unit processes designated a single function.

CPU - Central Processing Unit

CS - Control Strategy

DEP OIT - DEP Office of Information Technology.

DI	-	Digital Input
Distributed I/O	-	Hardware specifically designed to function as Remote I/O.
Distributed Control System	-	A control system comprising Unit and Area Process connected by a communication network which facilitates control and monitoring of the entire system from a central point such as a Plant control room.
DO	-	Digital Output
Fixed PLC	-	A PLC whose hardware configuration comprises a fixed number of I/O, a CPU and power supply all in one enclosure.
HMI	-	Human Machine Interface are electronic displays and elect windows providing operator access to monitor access, and set parameters of a Unit Process control system.
I/O	-	Input/Output
Modular	-	A style of PLC assembly where I/O, CPU and power supply are each mounted in cards which are insertable to a mounting chassis or backplane.
OAD	-	Operational Availability Demonstration
OIT	-	Operator Interface Terminal another name for HMI.

Panel or Control Panel shall include any enclosure provided to house electrical equipment, instrumentation, controls wiring terminations, network hardware or connections, indicators, displays, computer hardware, panels of packaged systems etc. provided under any Section of this Contract

P&ID	-	Process and Instrumentation Diagrams included in the Contract Documents.
PLC	-	Programmable Logic Controller
PMCS	-	Plant Monitoring and Control System
Remote I/O	-	Any I/O that functions physical remote from the location of the CPU and I/O located on its backplane.
SFT	-	Start-up and Field Testing
Unit Process	-	Any standalone equipment or process operation such as a pump in which all the logic for control of the equipment or process resides in the local installation.

URT	-	Upset and Recovery Testing
WFAT	-	Witnessed Factory Acceptance Tests

B. Reference Standards

The following organizations have generated standards that are to be used as guides in assuring quality and reliability of components and systems; govern nomenclature; define parameters of configuration and construction, in addition to specific details in this Section and the Contract Drawings:

BWT PDS	-	BWT Design Guideline, Program Development Standards.
BWT PLC	-	BWT Design Guideline, Programmable Logic Controllers.
BWT SCADA	-	BWT Design Guideline, SCADA Software.
ISA 5.1	-	Instrumentation Symbols and Identification
ISA 5.2	-	Binary Logic Diagrams for Process Operations
ISA 5.3	-	Graphic Symbols for Distributed Control/Shared Display Instrumentation, Logic and Computer Systems.
ISA 5.4	-	Instrument Loop Diagrams.
ISA 5.5	-	Graphic Symbols for Process Displays.
ISA 18.1	-	Annunciator Sequences and Specifications.
ISA18.2	-	Management of Alarm Systems for Process Industries.
ISA TR20.00.01	-	Specification Forms for Process Measurement and Control Instruments Part1: General Considerations.
ISA 51.1	-	Process Instrumentation Terminology.
ISA RP60.3	-	Human Engineering for Control Centers.
ISA 101	-	Human Machine Interfaces for Process Automation Systems.
NEMA 250	-	Enclosures for Electrical Equipment (1000 Volts Minimum).
NEMA ICS 1	-	Industrial Control and Systems General Requirements.
NEMA ICS 2	-	Industrial Control and System Controllers, Contactors and Overload Relays Rated 600V.

NEMA ICS 4	-	Terminal Blocks.
MIL-STD -1916	-	DOD Preferred Methods for Acceptance of Product.
NYCEC	-	New York City Electrical Code.
UL 508	-	Industrial Control Equipment.
UL 1059	-	Terminal Blocks.

1.05 Description

A. The PMCS shall be a Distributed Control System.

B. The system shall comprise unit processes organized into major process areas and a central monitoring and control point.

C. Unit processes shall be fully capable of accomplishing control, monitoring, storing and logging equipment operation at local point.

D. Unit Processes shall have the ability to transfer control to remote Area Control points or a remote Central Control point.

E. The system includes the following major equipment and all other appurtenances listed in the various Division 40 Sections:

F. Environmental Conditions:

The PMCS shall be designed and constructed for continuous operation under the following temperature and humidity conditions:

a. Control Rooms
   1) Ambient Temperature
      a) Normal Range 60º F to 80º F
      b) Extremes 40º F to 105º F.
   2) Relative Humidity
      a) Normal 80 percent
      b) Maximum 95 percent

b. Indoor locations
   1) Ambient Temperature 40º F to 120º F.
   2) Relative Humidity 98 percent maximum.

c. Outdoor locations
   1) Ambient Temperature -10º F to 120º F.
   2) Relative Humidity 100 percent maximum.

1.06 Quality Assurance

A. Criteria

The facilities outlined in the Contract Documents and included herein have been designed to meet stringent quality standards. The criteria for selection of this system include, but are not limited to the following:

a. The use of standard, "non-custom" equipment and application software.

b. The ability of City's personnel to make modifications and adjustments in the field to react to actual field conditions.

c. The ability of City to obtain training of City's personnel in a well-established equipment manufacturer training program.

d. The availability of factory service and a well-stocked spare parts inventory, which could be drawn upon by the City in emergency situations.

B. PMCS Supplier

The PMCS shall be furnished by a single Supplier who shall assume responsibility for providing a complete and integrated system.

The system is to contain products of a single manufacturer, when possible, and to consist of equipment models, which are currently in production.

The Supplier shall identify those system components, which are not of the supplier’s manufacture.

The Supplier shall supply the company's quality assurance plan, and for components which are not of the Supplier’s manufacture, the component manufacturer's quality assurance plan. The plans shall include but not necessarily be limited to:

a. Method of testing, raw material criteria, methods of documentation, station control, "Burn-In", final tests and serialization coding and packaging.

b. Plans should be in accordance with M.I.L.-STD-1916.

C. Supplier's Qualifications

Shall be a financially sound firm having at least ten (10) years continuous experience in designing, implementing, supplying and supporting instrumentation and control systems, which are comparable to the PMCS in terms of hardware, software, cost and complexity.

Shall have manufactured and supported standard lines of digital processing and control equipment and application software continuously for the last ten (10) years.

Shall have in existence at the time of bid advertisement, an experienced Engineering and Technical staff capable of designing, implementing, supplying and supporting the PMCS and handling the PMCS submittal and training requirements.

Shall provide system hardware components and software packages of fully developed, field proven standardized designs and therefore shall furnish a system which is not a highly unique, custom one-of-a-kind system.

Shall have a minimum of ten (10) years' experience in operator interface software configuration and hardware application and programming of distributed microprocessor based controllers and data highway systems.

Shall provide standard course offerings in general process control applications and in operation, programming and maintenance of the control system and equipment at a facility specifically utilized for training purposes. The facility shall have been in operation continuously for the last ten (10) years.

Shall have a thorough working knowledge of Plant operation and control philosophy in accordance with standard practices of the industry.

Shall have a system of traceability of the manufactured units and purchased components through production, assembly and testing.

Shall have a system of "Burn-In" for all components and available supportive documentation.

Shall have a demonstrated record of prompt response to field failures.

Shall have a documented program of failure analysis.

Shall have a UL approved panel shop.

Shall have a record of prompt shipments in accordance with Contract obligations required for previous projects.

D. Technical Proposal Requirements

The Contractor shall submit a copy of a Technical Proposal from the Supplier which the Contractor has selected to provide the PMCS.

The Technical Proposal shall be complete and at a minimum contain all information as specified below:

a. Financial Statement

1) Shall include the value of discrete relay/ distributed microprocessor based control systems delivered during the last five (5) fiscal years.

2) Shall include the value of other process instrumentation and controls shipped during the period.

b. Experience

1) Shall provide evidence of compliance with the specific experience requirements under the Supplier Qualification listed in this Section in the form of an experience certification signed by an officer of the company.

2) Shall furnish list of last ten (10) projects completed.

3) Shall describe at least three (3) completed municipal projects utilizing instrumentation and control equipment identical to or similar to (indicate which) that specified in this Section.

4) Shall indicate project name, value, completion date, names and phone numbers of representatives familiar with each project.

5) Letters of recommendation submitted does not relieve the Contractor from complying the requirements in this Section

c. Personnel

1) Shall provide a listing of those personnel committed to be assigned to the Contract.

2) List shall include Project Manager, Project Engineer, Field Representative, Local Service Representative, and Sales Representative.

3) Shall identify addresses of personnel not based at supplier's main office.

4) Shall provide documentation including resumes of personnel demonstrating experience in Plant operations.

d. Exceptions

1) Shall list all exceptions and deviations from the requirements of the Contract.

2) Shall reference the Drawing Number, Section number, article, and paragraph of proposed variance and provide an explanation of why the proposed exception or deviation meets (or exceeds) the functional or equipment requirements specified.

e. Shipment Records

1) Shall provide evidence of timely delivery of equipment on past projects.

f. PMCS Hardware and Software:

1) Shall provide a general system configuration drawing and include designations for model numbers and types of the proposed distributed control system components and all other proposed system components.

2) Shall provide descriptive literature and manufacturer's catalog information covering all aspects of the hardware design and software functions and capabilities of the specific discrete/ distributed control system and data highway system proposed for the PMCS.

3) Shall provide descriptive literature and catalog information covering the features and capabilities of all proposed hardware components.

4) Shall describe standard software packages proposed, including any customized software required to meet the functional intent of the system Specifications.

5) Descriptions shall address the following:

a) Overview of system software including the functions, organization and interrelationship of the major software modules provided.

b) Estimated memory requirements to accomplish the specified graphic display, logging, reporting and alarming functional requirements.

c) Examples of graphic displays, methods of display access and procedures for display definition and generation, including use of the standard symbols library and capabilities for generating and storing user defined symbols in the symbol library.

d) Real-time data logging and reporting software features and capabilities including examples of logs and reports, procedures for automatic reporting and logging file setups, limitations on sampling and computing frequency for data acquisition and logging, and utilities for log file and report modifications and file maintenance.

e) Alarm handling software features and capabilities including an alarm display example, methods of defining alarms and alarm files, automatic printing of alarms, acknowledgements and return to normal conditions, chronological sorting and time-tagging of alarms, and alarm file maintenance utilities.

f) Distributed system programming and documentation software features and capabilities, including screen display and printout examples for a fully annotated and cross-referenced ladder diagram and the ladder diagram elements.

g) Use of system level diagnostics for monitoring the performance of and detecting and reporting faults associated with the distributed communications data highway.

g. Instrumentation and Panel Mounted Devices

1) The Contractor shall provide descriptive literature and catalog cuts for each type of sensor, transmitter, indicator, and other such devices required by the Contract.

h. Training

1) The Contractor shall provide information and literature as to the organization proposed and the factory facilities to be utilized for the training specified.

2) Indicate the qualifications of the factory training staff.

i. Availability Demonstration

1) The Contractor shall indicate how the Availability Demonstration will be accomplished.

j. Maintenance

1) The Contractor shall provide the following information:

a) Location of service facility along with minimum and maximum response time.

b) Location of parts facility with delivery time and method.

E. Supplier's Responsibility:

The Contractor shall retain the PMCS supplier to assume the responsibilities specified below. However, execution of these specified duties by the System Supplier shall not relieve the Contractor of the ultimate responsibility for the PMCS.

a. Fabrication, implementation and applications programming of the PMCS and all subsystems in accordance with the Contract Documents and all referenced standards and codes.

b. Preparation, assembly and correction of all PMCS submittals in accordance with the Contract Documents.

c. Proper interfacing of the PMCS hardware, software, field devices and panels, including required interfacing with packaged control systems furnished by other equipment suppliers, and with the Facility's PMCS.

d. Supervision of the installation of PMCS, instruments, panels, consoles, cabinets, wiring and other components required.

e. Calibration, testing and start-up of the PMCS.

f. Training of The City personnel in operation and maintenance of the PMCS.

g. Handling of all warranty obligations for the control system components.

h. Maintenance of two (2) reproducible copies of the complete PMCS system and running software at the supplier's facility for the duration of the warranty period.

1) Software copies shall be maintained on the bulk storage medium used by the supplier for system program development and shall be directly loadable on the supplied system.

F. Coordination and Progress Meetings:

The Contractor shall be responsible for the scheduling and coordinating the system installation with regard to all other work on the. Said coordination shall be documented on the project schedule.

Routine progress and coordination meetings will be scheduled by Engineer. The Contractor and a representative of the System Supplier shall be required to attend a minimum of one meeting per month for the length of Contract.

The purpose of the meetings shall be to review the progress of the work involving the PMCS and provide coordination for installation of the equipment to ensure construction schedules are met.

Representatives at the meetings shall have the competence and authority to make any and all necessary decisions. Decisions and statements made at the meetings shall commit the Contractor and the System Supplier to agreed procedures and schedules.

G. System Supplier Project Personnel

The Contractor shall require the System Supplier to provide the following project personnel:

a. Project Manager

1) The System Supplier shall appoint a Project Manager who shall coordinate and schedule all work and assure that the Contract schedule is met.

2) The Project Manager shall have a minimum of ten (10) years' experience in coordination, scheduling and delivery of instrumentation and control contracts under similar Plant Facilities as this Contract thorough working knowledge of contract administration as both a prime and sub-prime Vendor/ Contractor.

3) The Project Manager shall act as the liaison with the Contractor for the installation of the PMCS and shall assist in all matters required for proper coordination and interfacing of the equipment and processes.

b. Field Engineer

1) The System Supplier shall appoint a Field Engineer with responsibilities as follows:

a) Provide advice and technical consultation relative to installation techniques and procedures for equipment furnished.

b) Installed system checkout, calibration, adjustment and start-up including tuning of every control loop.

c) Maintenance services during availability demonstration.

d) Involvement in the on-site system training of pumping station personnel.

e) Resolving of control problems encountered during initial start-up and testing of all PMCS monitoring equipment.

2) The Field Engineer shall have a minimum of ten (10) years' experience in systems engineering and start-up and shall have a thorough working knowledge of both the hardware and software supplied for the PMCS.

c. Training Personnel:

1) Comply with requirements of Section 40 61 26 - PMCS Training.

1.07 Submittals

A. Shop Drawings General

The Contractor shall submit Shop Drawing and material specifications for the approval of the Engineer.

Shop Drawing preparation shall not commence until after the pre-submittal conference specified below.

Manufacture of the PMCS shall not commence until related and interfacing equipment submittals have been approved by the Engineer.

Shop Drawings shall be submitted in complete packages grouped to permit review of related items as generally outlined in this Section under Submittal Requirements.

Review of Shop Drawings will be for conformance with Contract Documents and with regard to functions specified to be provided.

B. Pre-Submittal Conference

The Contractor shall arrange and conduct a pre-submittal conference on the PMCS within forty-five (45) days of notification of preliminary acceptance of the proposed PMCS and Supplier by the City and the Engineer.

The Pre-submittal conference shall be attended by representatives of Contractor, the PMCS Supplier, and the Engineer. The Contractor shall allocate one (1) full working day for the conference and that time shall be included in the price of this Contract. The meeting shall be held at the Facility.

The purpose of the pre-submittal conference shall be to review informally and approve the manner in which the control system supplier intends to respond to the Contract requirements before any submittals are prepared.

Contractor shall prepare the items listed below for presentation at the pre-submittal conference. The information shall be submitted to Engineer four (4) working weeks prior to the date of the conference.

a. List of equipment and materials required for the PMCS and the brand and model which Contractor proposes to use for each item or component of the proposed system.

b. List of proposed exceptions to the plans and specifications along with a brief explanation of each.

1) Approval of exceptions and substitution shall be subject to a formal submittal according to the Contract procedure.

c. Sample of each type of submittal specified herein. These may be submittals prepared for other projects.

d. A flow chart showing the steps to be taken in preparing and coordinating each control system submittal to the Engineer, and a list of proposed submittals.

e. Schedule for all PMCS related activities from the pre-submittal conference through start-up and training.

1) Particular emphasis shall be given to dates relative to submittal, design, fabrication, programming, factory testing, delivery, installation and field testing.

2) The schedule shall be subdivided to show activities relative to each major item or group of items when everything in a given group is on the same schedule.

3) Schedule shall conform to requirements for Contract schedules.

f. General outline of the type of tests to be performed to verify that the PMCS and all its components including sensors/transducers, instruments and digital processing equipment are functioning properly.

C. Sensors/Transducers and Panel Instruments.

Submit product information for all sensors/transducers and panel instruments. Include the following:

a. Manufacturer's product name and model number.

b. Instrument tag number from Contract Documents.

c. Manufacturers' standard catalog product data.

d. Description of construction features.

e. Performance and operation data.

f. Installation and mounting details, instructions and recommendations.

g. Service requirements.

h. Dimensions.

D. PMCS Information:

System Description

a. Detailed block diagram showing system hardware configuration and identifying model numbers of system components.

b. Software language and organization:

1) Format, protocol and procedures for data highway communications and local communications with input/output modules and peripheral devices.

HMI details:

c. Control and failure modes;

d. On line and off line capabilities for programming, system utilities and diagnostics;

e. Input/output point listing with I/O module cross reference identification for each distributed controller;

f. Data base listing including all input/output points;

g. Suggested detailed format and configuration of all log reports, alarm summaries, printer outputs, displays and graphics;

h. List of spare parts and test equipment.

Equipment Hardware

i. Layout drawings showing front, rear, end and plan views to scale of all processing equipment, I/O components, power supplies and peripheral devices.

j. Construction details, features and procedures.

k. Interconnection diagrams including termination details, cable identification list and cable length.

l. Plans showing equipment layout in control panels.

m. Installation requirements, instructions and/or recommendations

Software Description

n. Standard technical documentation covering all aspects of the PMCS software functions and capabilities, including instruction set description and programming procedures related to control, monitoring, display, logging, reporting and alarming functions

o. Standard technical and instructional documentation covering software for utility, system support, system documentation, display, communications, data logging and storage and diagnostic functions.

p. Detailed functional descriptions of application programs explaining control, display, logging and alarming features to be provided and functions to be performed.

q. Documentation describing memory type, size and structure and listing size of system memory, I/O and data table memory and size of memory available for control programs. Also define estimated control program memory requirements and processor execution times and program scan times.

r. Documentation describing central monitoring station main and secondary memory type size and requirements to perform the display, logging, reporting and alarming functions required.

Panels, Consoles and Cabinets Information:

s. Layout Drawings shall include the following:
   1) Front, rear, side, end and plan views to scale.
   2) Dimensional information
   3) Tag number and functional name of components mounted in and on panel, console or cabinet.
   4) Product information on all panel components.
   5) Nameplate location and legend including text, letter-size and colors to be used.
   6) Location of anchoring connections and holes.
   7) Location of external wiring and/or piping connections.
   8) Mounting and installation details.
   9) Proposed layouts and sizes of graphic display panels.
   10) Calculations for heating and cooling.

t. Wiring and/or piping diagrams shall include the following:
   1) Name of panel, console or cabinet.
   2) Wiring sizes and types.
   3) Piping sizes and types.
   4) Terminal strip numbers.
   5) Color coding
   6) Functional name and manufacturer's designation for components to which wiring and piping are connected

u. Electrical control schematics in accordance with JIC standards

v. Plan showing equipment layout in each area.

Field piping diagrams shall include the following:

w. Piping sizes and types.

x. Location, functional name and manufacturer's designation of items to which piping is connected.

Instrument loop diagrams for all analog display, control and I/O loops prepared using ISA standard symbols in accordance with ISA 5.4 shall include the following:

y. Instrument tag numbers from Contract Documents.

z. Functional name of each item

aa. Manufacturer's model, product, or catalog number for each item.

bb. Location of each item

ISA Data Sheets:

cc. ISA Data Sheets shall comply with ISA–TR20.00.01–2001 requirements and shall be computer generated.

dd. All field and panel instruments ISA Data Sheets shall contain the following information, as a minimum.

1) Tag number in accordance with Contract Documents;
2) Product (item) name used herein and on the Contract Drawings;
3) Name of manufacturer or supplier;
4) Manufacturer's complete model number;
5) Location of the device;
6) Input-output characteristics;
7) Range, size, and graduations;
8) Physical size with dimensions, NEMA enclosure classification and mounting details;
9) Materials of construction of all components;
10) Instrument or control device sizing calculations, where applicable;
11) Certified calibration data on all flow metering devices, where applicable;
12) Environmental requirements during storage and operation.

PMCS I/O Loop Wiring Diagrams

ee. Contractor shall prepare drawings on a module-by-module basis and include the following information:

1) Rack numbers, slot number, module type and module terminal point numbers. Also, include location and identification of all intermediate panel terminal block and strip numbers to which I/O wiring and power supply wiring is connected. Identify all power supply circuit numbers and ratings.
2) Wiring sizes, types, wire numbers and color-coding.
3) Location, functional name, tag numbers and manufacturer model numbers of panel and field devices and instruments to which I/O wiring is connected. For discrete I/O devices, use JIC electrical symbols tagged with designation shown on P&IDs.

E. PMCS Operation and Maintenance (O&M) Manuals

The Contractor shall furnish O&M manuals for the PMCS in accordance with the Section 01 78 25 – Operation and Maintenance Manuals, this Section and the following minimum requirements:

a. Name, address and telephone number of the PMCS Supplier’s local service representative.

b. Complete list of supplied system hardware parts with full model numbers referred to system part designations, including spare parts and test equipment provided.

c. Copy of all approved submittal information and system shop drawings as specified herein with corrections made to reflect actual system as tested and delivered to the site for installation.

d. Half-size black line reproductions shall be provided for all shop drawings larger than 11 by 17 inches.

e. All drawings shall be 11 by 17 inches minimum size.

1) Drawings 8-1/2 by 11 inches are not acceptable.

f. Manufacturer's Original Copies of Hardware, Software and Installation, Assembly and Operations Manuals for the PMCS central monitoring station and peripheral devices, and all other control system components.

g. Manuals shall include the following information:

1) General descriptive information covering the basic features of the equipment

2) Physical description covering layout and installation requirements and all environmental constraints.

3) Functional and operational descriptions covering the procedures for programming, operation, start-up, shutdown, and calibration of the distributed control system equipment and explaining how the various control functions are performed.

4) Principles of operation explaining the logic of operation; provide information covering operation to a component level.

5) Maintenance procedures covering checkout, troubleshooting, and servicing.

a) Checkout procedures shall provide the means to verify the satisfactory operation of equipment,

b) Troubleshooting procedures shall serve as a guide in determining faulty components and

c) Servicing procedure shall cover requirements and recommended time schedule for calibration, cleaning, lubrication and other housekeeping and preventive maintenance procedures.

6) Wiring, schematic and logic diagrams.

7) Safety considerations relating to operation and maintenance procedures.

F. Record Drawings and Documentation

The Contractor shall require the System supplier to revise all system shop drawings, submittals and software documentation to reflect as-built

conditions in accordance with the requirements of the Contract Documents and the supplemental requirements.

Half-size black line sets shall be provided for all drawings larger than 11 x 17. Specific instructions for outdated drawing removal and replacement shall be provided with the record drawing submittal.

Half-size black line prints of wiring diagrams applicable to each control panel shall be provided inside a clear plastic envelope and stored in a suitable print pocket or container inside each control panel.

G. Reports:

The following report shall be submitted shall be submitted to the Engineer:

a. Factory Test Reports.

b. Installation Inspection, Field Calibration, and Field Testing Reports.

1.08 Delivery, Storage, and Handling

A. The PMCS equipment shall be delivered, stored and handled in accordance with the Sections listed under Related Specification of this Section, the Specifications, the manufacturer's recommendations and the following:

PMCS equipment shall be packaged at the factory prior to shipment to site, to protect each item from damage during shipment and storage.

Containers shall be protected against impact, abrasion, corrosion, discoloration and/or other damages.

Clearly label contents of each container and provide information on the required storage conditions necessary for the equipment.

PMCS equipment shall be inspected for shipping damage or loose parts when received.

Evidence of water which may have entered equipment during transit shall be checked.

PMCS equipment shall be lifted, rolled or jacked into locations shown on the Contract Drawings.

PMCS equipment shall be stored in a clean, dry location in which a uniform temperature is maintained.

PMCS equipment shall be protected in storage with suitable covering and air circulation maintained to ensure the equipment is kept dry and free from condensation.

Where dampness or condensation may be encountered, heaters shall be provided for equipment to prevent moisture damage.

1.09 Spare Parts, Special Tools, and Supplies

A. The Contractor shall furnish and deliver to the Engineer, at that part of the site and at such time as the Engineer may direct, spare parts for the PMCS in accordance with the Sections listed under Related Specifications of this Section.

B. The spare parts shall be listed in an index and packed in containers suitable for long term storage, bearing labels clearly designating the manufacturer's part number with complete information for use and reordering.

1.10 Special Warranty Provisions / Guarantee Periods

A. Not Used

PRODUCTS

1.11 Manufacturers

A. PMCS/s shall be as manufactured by:

Optimum Controls Corp, Reading, PA;

Siemens Industry Inc., Washington, DC;

A.K. De Rama Industrial Control System Inc., Mountainside, NJ;

Avantech, Inc., Columbia, SC;

Or approved equal.

1.12 Materials / Equipment

A. Design Criteria

Power Supplies:

a. All electrically powered equipment and devices shall be suitable for operation on 115-volt +/- 10 percent, 60 Hz. If a different voltage or closer regulation is required, a suitable regulator or transformer shall be provided.

b. Appropriate power supplies shall be furnished by the Contractor for all two (2) wire transmitters, loops for monitoring discrete inputs and all necessary outputs.

c. Power supplies shall be mounted in enclosures and installed in the appropriate indoor or field panel.

d. Power supplies shall be sized adequately for signal converter and repeater loads.

e. Design all power supplies for a minimum of 130 percent of the maximum simultaneous current draw.

f. A power on-off switch or an air circuit breaker shall be furnished for each item requiring electrical power.

g. Provide isolation transformers, line voltage regulators and power distribution panels for the distributed digital portions of the PMCS to eliminate electrical noise and/or transients entering on the primary power line.

Signal Requirements

h. The control system shall be designed to use 4 to 20 mA DC analog signals, unless otherwise specified.

i. Signal converters and repeaters shall be provided where required and in addition analog inputs to the distributed control system shall be through appropriate repeaters to provide signal isolation where series looped with other devices and to allow the loop to maintain integrity even if the distributed control system is out of service.

j. Signals shall be isolated from ground.

k. Signals shall not have a transient dc voltage exceeding 300 volts over one millisecond nor a dc component over 300 volts.

l. Equipment ranges, scales and set-point values specified in Division 40 and as shown on the P&IDs are for initial setting and configuration. Contractor shall coordinate these values with actual equipment furnished to implement proper and stable process action as systems are placed in operation.

m. For any items where ranges, scales and set-points may not have been specified, Contractor shall submit a recommendation to the Engineer for review and approval.

n. Design all logic and control loops for fail-safe operation.

o. Surge protection shall be provided for all PMCS and all other control system components which could be damaged by electrical surges.

p. The system and associated input/output wiring will be used in a Plant environment where there can be high energy ac fields, dc control pulses, and varying ground potentials between the sensors/transducers or input contact locations and the system components. The system design shall be adequate to provide proper protection against interference from all such possible situations.

B. Miscellaneous:

All PMCS components shall be heavy-duty types, designed for continuous service in the facility environment, outlined in the Contract Documents and included herein.

All equipment provided are to be of modular construction and to be capable of field expansion through the installation of plug-in circuit cards and additional cabinets as necessary.

All instrumentation and PMCS components shall be designed to return automatically to accurate measurement within 15 seconds upon restoration of power after a power failure or when transferred to standby power supply.

All field-mounted instruments and system components shall be designed for installation in humid and corrosive service conditions.

All field mounted cabinets, instrument enclosures, junction boxes and appurtenances shall conform to NEMA 4X requirements and be made of 12 gage 316 stainless steel, unless otherwise specified.

All relays with interconnections to field devices shall be wired through terminal blocks. Terminals as part of the relay base are not an acceptable alternate.

All panel mounted instruments, switches, and other devices shall be selected and arranged to present a pleasing coordinated appearance. All panel door mounted devices shall be of the same manufacturer and model line.

All components furnished, including field and rear of panel instruments, shall be tagged with the item number and nomenclature indicated on the Contract Documents and/or approved Shop Drawings.

Field-mounted devices shall be treated with an anti-fungus spray.

Field-mounted devices shall be protected from exposure to freezing temperatures.

1.13 Fabrication / Assembling / Finishes

A. Control Strategies

Functional descriptions of all monitoring and control sequences for the PMCS shall be as specified in Section 40 61 96 - PMCS Control Strategies.

The general guidance on how the control strategies shall be implemented in the PMCS shall be as specified in Section 40 61 95 – PMCS Monitoring and Control Criteria.

B. Telemetry

Telemetry and similar remote monitoring and control equipment for the PMCS shall be as specified in Section 40 63 83 - PMCS Remote Terminal Units.

C. Panels and Enclosures

Panels and Enclosure for the PMCS shall be as specified in Section 40 67 16 - PMCS Panels and Enclosures.

D. Panel Mounted and Field Instruments

Instruments and Devices installed on panels and in the field for the PMCS shall be as specified in Section 40 78 90 - PMCS Panel Mounted Instruments and Devices.

Standalone instruments and devices for the PMCS shall be as specified in their respective Sections.

E. Lists and Index

PMCS I/O shall be as specified in Section 40 61 93 – PMCS Input/Output List

The list of instruments, their ranges, Tag Numbers, and P&ID shall be as specified in Section 40 61 94 – PMCS Instrument Index.

1.14 Source Quality Control / Shop Tests

A. Factory Tests

Factory testing for the PMCS shall be as specified in Section 40 80 81 – PMCS Factory Testing.

EXECUTION

1.15 Examination / Preparation

A. Not Used

1.16 Installation

A. Not Used

1.17 Field Testing / Quality Control

A. Not Used

1.18 Startup / Demonstration

A. Not Used.

1.19 Adjusting / Protection / Cleanup

A. Not Used

END OF SECTION

NO TEXT ON THIS PAGE

40 61 15 PROCESS CONTROL SYSTEM SUBMITTALS

GENERAL

1.01 Summary

A. The Contractor shall submit for review complete Shop Drawings for all equipment in accordance with the General and Supplemental Conditions and Division 1 of the Specifications. All submittal material shall be complete, legible, and reproducible, and shall apply specifically to this project.

1.02 Payment

A. There is no separate payment provision for this section.

1.03 Related Sections

A. Section 40 61 13 – PMCS General Requirements

1.04 References

A. Not Used

1.05 Description

A. All submittal materials shall be tailored to this project by highlighting relevant items or crossing out non-applicable items. Generic submittals without identified options will be returned the Contractor without review.

B. Compliance, Deviations, and Exceptions (CD&E) Letter:

Where a named manufacturer and product is specified and a substitution or an “or equal” product is submitted, the submittal shall be accompanied by a “Compliance, Deviations, and Exceptions (CD&E) letter.” If the required submittal is submitted without the letter, the submittal will be rejected.

The letter shall include all comments, deviations and exceptions taken to the Drawings and Specifications by the Contractor, subcontractor (if applicable), and the equipment Manufacturer. This letter shall include a copy of the Specification Section to which the submittal pertains. In the left margin beside each and every paragraph/item, a letter "C", "D", or "E" shall be typed or written in.

a. The letter "C" shall be for full compliance with the requirement.

b. The letter "D" shall be for a deviation from the requirement.

c. The letter "E" shall be for taking exception to a requirement.

Any requirements with the letter "D" or "E" beside them shall be provided with a full typewritten explanation of the deviation/exception. Handwritten explanation of the deviations/exceptions shall not be acceptable.

C. The CD&E letter shall also address deviations, and exceptions taken to each Drawing related to this Specification Section

1.06 Quality Assurance

A. Not Used

1.07 Submittals

A. EXISTING CONDITIONS / AS-BUILT DOCUMENTATION Submittal

When all information has been gathered, it shall be submitted to Engineer along with a clear and unequivocal statement that the existing conditions have been documented and understood. Contractor shall be held responsible for all issues that arise due to Contractor's modifications, demolition, removal, or decommissioning of existing equipment, including necessary reversion back to previous conditions.

B. DIGITAL HARDWARE SUBMITTALS

Submit system block diagram(s) showing:

a. All equipment to be provided.

b. All interconnecting cable.

c. Equipment names, manufacturer, and model numbers.

d. Equipment locations.

Submit information for all digital equipment including, but not limited to, the following:

e. Bill of materials with equipment names, manufacturers, complete model numbers and locations.

f. Catalog cuts, including complete part number breakdown information.

g. Complete technical, material and environmental specifications.

h. Assembly drawings.

i. Mounting requirements.

j. Color samples.

k. Nameplates.

l. Environmental requirements during storage and operation.

C. SOFTWARE SUBMITTALS

Software submittals shall include the following as a minimum:

a. Bill of materials with software names, vendors, and complete listings of included software modules.

b. Standard manufacturer's literature describing the products.

c. Description of function of software in Control and Information System.

d. Limitations or constraints of software.

e. Minimum system (processor and memory) requirements.

f. Operation and maintenance requirements.

Submit information on the following software:

g. Third-party software, including:

1) Operating system.

2) Operator workstation (SCADA or HMI) software, including all add-in software provided to perform specific functions (alarm dialers, schedulers, backup creation software, etc.).

3) Office-type products, such as spreadsheets, word processors, etc.

4) Database management software.

5) Communication software, including all applicable local and wide area network software.

6) Programmable controller programming software (where applicable).

h. Software configuration, including:

1) Graphic display organization.

2) Database configuration for operator workstations and database management system.

3) Trends.

4) System security.

5) Formats for all reports, including all required calculations.

6) Intercommunications between software products required to implement system functions.

7) Equipment backup configuration and requirements.

Control Strategies

i. Description of automatic logic and all non-standard manual logic using plain English, for non-technical persons, and written in Contractor's own words. The write-up shall include references to associated I/O, tag/loop numbers, alarming/interlocks.

j. Submitting language verbatim to Section 40 61 96 – Process Control Descriptions shall not be acceptable.

Application Software

k. Provide application software documentation that contains program descriptions for the operation, modification, and maintenance of all application programs provided for the digital system.

l. Application software includes all custom routines developed specifically for this project, or pre-written routines used for accomplishing specified functions for this project. This shall include any add-in custom software.

Graphic Displays

m. Submit all graphic displays required to perform the control and operator interface functions specified herein. Submitted graphic displays shall be for both new and modified graphics.

n. Submit the complete set of graphic displays for review by the the Engineer at least 60 days prior to commencement of factory testing.

o. Where a large number of graphic displays are required, submit an initial set of example displays for review before the complete set of displays is submitted. This initial set shall include examples of all basic graphic display design features and parameters and is intended to allow the Contractor to obtain preliminary approval of these features and parameters prior to beginning main graphic display production.

p. The Contractor shall allow for one major cycle of revisions to the displays prior to factory testing and one minor cycle of revisions following factory test. A cycle of revisions shall be defined as all revisions necessary to complete a single set of changes marked by the Engineer. Additional corrections shall be performed during start-up as required to accommodate changes required by actual field conditions, at no additional cost to the City

q. The required submittals in each revision cycle shall be full color prints of the entire set of displays.

r. Displays shall be printouts of actual process graphics implemented in the system.

D. CONTROL PANEL SUBMITTALS

Submittals shall be provided for all control panels, and shall include:

a. Exterior panel drawings with front and side views, to scale.

b. Interior layout drawings showing the locations and sizes of all equipment and wiring mounted within the cabinet, to scale.

c. Panel area reserved for cable access and conduit entry.

d. Location plans showing each panel in its assigned location.

Submit information for all exterior and interior panel mounted equipment including, but not limited to, the following:

e. Bill of materials with equipment names, manufacturers, complete model numbers and locations.

f. Catalog cuts, including complete part number breakdown information.

g. Complete technical, material and environmental specifications.

h. Assembly drawings.

i. Mounting requirements.

j. Color samples.

k. Nameplates.

l. Environmental requirements during storage and operation.

Submit panel wiring diagrams showing power, signal, and control wiring, including surge protection, relays, courtesy receptacles, lighting, wire size and color coding, etc.

E. INSTRUMENT SUBMITTALS

Submit information on all field instruments, including but not limited to the following:

a. Product (item) name and tag number used herein and on the Contract Drawings.

b. Catalog cuts, including complete part number breakdown information.

c. Manufacturer's complete model number.

d. Location of the device.

e. Input output characteristics.

f. Range, size, and graduations.

g. Physical size with dimensions, NEMA enclosure classification, and mounting details.

h. Materials of construction of all enclosures, wetted parts and major components.

i. Instrument or control device sizing calculations where applicable.

j. Certified calibration data on all flow metering devices.

k. Environmental requirements during storage and operation.

l. Associated surge protection devices.

m. Installation drawings/details.

F. WIRING AND LOOP DIAGRAMS

Submit interconnection wiring and loop diagrams for all panels and signals in the Control and Information System.

Electrical interconnection diagrams shall show all terminations of equipment, including terminations to equipment and controls furnished under other Divisions, complete with equipment and cable designations. Where applicable, interconnection wiring diagrams shall be organized by input/output card. Interconnecting diagrams shall be prepared in a neat and legible manner on 11 X 17-inch reproducible prints.

Loop drawings shall conform to the latest version of ISA Standards and Recommended Practices for Instrumentation and Control. Loop Drawings shall conform to ISA S5.4, Figures 1-3, Minimum Required Items Figures 4-6, Minimum Required Items plus Optional Items.

Loop drawings shall not be required as a separate document provided that the interconnecting wiring diagrams required in Article B., above, contain all information required by ISA 5.4.

G. OPERATION AND MAINTENANCE MANUALS

Operation and maintenance (O&M) manuals shall consist of two basic parts:

a. Manufacturer standard O&M manuals for all equipment and software furnished under this Division.

b. Custom O&M information describing the specific configuration of equipment and software, and the operation and maintenance requirements for this particular project.

The manuals shall contain all illustrations, detailed drawings, wiring diagrams, and instructions necessary for installing, operating, and maintaining the equipment. The illustrated parts shall be numbered for identification. All modifications to manufacturer standard equipment and/or components shall be clearly identified and shown on the drawings and schematics. All information contained therein shall apply specifically to the equipment furnished and shall only include instructions that are applicable. All such illustrations shall be incorporated within the printing of the page to form a durable and permanent reference book.

The manuals shall be prepared specifically for this installation and shall include all required cuts, drawings, equipment lists, descriptions, etc. that are required to instruct operation and maintenance personnel unfamiliar with such equipment. The maintenance instructions shall include troubleshooting data and full preventive maintenance schedules. The instructions shall be bound in locking 3-D-ring binders with bindings no larger than 3.5 inches. The manuals shall include 15% spare space for the addition of future material. The instructions shall include drawings reduced or folded and shall provide the following as a minimum.

c. A comprehensive index.

d. A functional description of the entire system, with references to drawings and instructions.

e. A complete "as built" set of all approved shop drawings, which shall reflect all work required to achieve final system acceptance.

f. A complete list of the equipment supplied, including serial numbers, ranges, and pertinent data.

g. Full specifications on each item.

h. Detailed service, maintenance, and operation instructions for each item supplied.

i. Special maintenance requirements particular to this system shall be clearly defined, along with special calibration and test procedures.

j. Complete parts lists with stock numbers and name, address, and telephone number of the local supplier.

k. References to manufacturers' standard literature where applicable.

l. Warning notes shall be located throughout the manual where such notes are required to prevent accidents or inadvertent misuse of equipment.

The operating instructions shall clearly describe the step by step procedures that must be followed to implement all phases of all operating modes. The instructions shall be in terms understandable and usable by operating personnel and maintenance crews and shall be useful in the training of such personnel.

The maintenance instructions shall describe the detailed preventive and corrective procedures required, including environmental requirements during equipment storage and system operation, to keep the System in good operating condition. All hardware maintenance documentation shall make reference to appropriate diagnostics, where applicable, and all necessary wiring diagrams, component drawings and PCB schematic drawings shall be included.

The hardware maintenance documentation shall include, as a minimum, the following information:

m. Operation Information: This information shall include a detailed description of how the equipment operates and a block diagram illustrating each major assembly in the equipment.

n. Preventive Maintenance Instructions: These instructions shall include all applicable visual examinations, hardware testing and diagnostic routines, and the adjustments necessary for periodic preventive maintenance of the System.

o. Corrective Maintenance Instructions: These instructions shall include guides for locating malfunctions down to the card replacement level. These guides shall include adequate details for quickly and efficiently locating the cause of an equipment malfunction and shall state the probable source(s) of trouble, the symptoms, probable cause, and instructions for remedying the malfunction.

p. Parts Information: This information shall include the identification of each replaceable or field repairable component. All parts shall be identified on a list in a drawing; the identification shall be of a level of detail sufficient for procuring any repairable or replaceable part. Cross references between equipment numbers and manufacturer's part numbers shall be provided.

Software documentation shall conform to a standard format and shall include, but not be limited to, the following:

q. A program abstract that includes:

1) Program Name - The symbolic alphanumeric program name.

2) Program Title - English text identification.

3) Program Synopsis - A brief text shall be provided that specifies the need for the program, states when it shall be used and functionally describes all inputs, outputs and functions performed. This descriptive text shall be written in a language that is understandable by non-programming-oriented readers.

r. A program description that shall include, but not be limited to, the following:

1) Applicable Documents - List all documents (standard manufacturer's literature, other program descriptions, etc.) by section, if practical, that apply to the program. One complete copy of all applicable reference material shall be provided.

2) Input Output - Identify each input and output parameter, variable, and software element used by the program. State the purpose of all inputs, outputs, and variables.

3) Processing - This section shall contain a description of the overall structure and function of the program. Describe the program run stream and present a detailed description of how the program operates. Describe the timing and sequencing of operations of the program relative to other programs. Describe all interactions with other programs. Processing logic that is not readily described without considerable background information shall be handled as a special topic with references to an appendix or to control strategy document that details the necessary information. Reference shall also be made to an appendix or control strategy document for equation and program algorithm derivations.

4) System Configuration - Describe in detail the system configuration or status required for program implementation, if appropriate.

5) Limitations and Constraints - Summarize all known or anticipated limitations of the program, if appropriate.

6) Storage - Define program storage requirements in terms of disk or RAM memory allocation.

7) Verification - Describe, as a minimum, a test that can be used by the operator to assure proper program operation. Define the required system configuration, input requirements and criteria for successful test completion.

8) Diagnostics - Describe all program diagnostics, where applicable. Descriptions shall list each error statement, indicate clearly what it means, and specify what appropriate actions should be taken.

9) Malfunction Procedures - Specify procedures to follow for recovering from a malfunction due to either operator error or other sources.

H. FINAL SYSTEM DOCUMENTATION

All documentation shall be delivered to the Engineer prior to final system acceptance in accordance with the Contract Documents. As a minimum, final documentation shall contain all information originally part of the control system submittals.

Provide a complete set of detailed electrical interconnection diagrams required to define the complete instrumentation and control system. All diagrams shall be 11 X 17-inch original reproducible prints. All diagrams shall be corrected to describe final "as built" hardware configurations and to reflect the system configuration and control methodology adopted to achieve final system acceptance.

Provide system software documentation for the operation and maintenance of all system software programs provided as a part of the digital system. All system software documentation shall be amended as required to delineate all modifications and to accurately reflect the final as built software configurations.

Provide application software documentation that contains program descriptions for the operation, modification, and maintenance of all application programs provided for the digital system.

Provide control strategy documentation which shall include control strategy (block oriented or ladder logic) diagrams to describe the control of all processes. Control strategy documentation shall reflect the system configuration and control methodology adopted to achieve final system acceptance. Control strategy documentation shall conform to the submittal requirements listed hereinabove.

O&M documentation shall be amended with all final, adjusted values for all setpoints and other operating parameters for the City's reference.

The City recognizes the fact that not all possible problems related to real time events, software interlocks, and hardware maintenance and utilization can be discovered during the Acceptance Tests. The Contractor shall investigate, diagnose, repair, update, and distribute all pertaining documentation of the deficiencies that become evident during the guarantee period. All such documentation shall be submitted in writing to the Engineer within 30 days of identifying and solving the problem.

I. PROGRAMS AND SOURCE LISTINGS

Provide one copy of all standard, of-the-shelf system and application software (exclusive of firmware resident software) on original media furnished by the software manufacturer.

Provide one copy of source listings on digital media, acceptable to Engineer, for all custom software/logic written specifically for this facility, all database files configured for this facility, and all control strategies. All source listings shall include a program abstract, program linkage and input/output data. Comments describing the program flow shall be frequently interspersed throughout each listing.

All software/logic shall be in both its native format and in Adobe Portable Document Format.

J. SUBMITTAL/DOCUMENTATION FORMAT

All drawing-type submittals and documentation shall be rendered and submitted in the latest version of AutoCAD.

All textual-type submittals and documentation shall be rendered and submitted in the latest version of Microsoft Word or in searchable Adobe Portable Document Format (PDF). Raster scans will not be accepted.

K. ELECTRONIC O&M MANUALS

Subject to acceptance by the Engineer, the O&M information may be submitted in part or in whole in an electronic format on digital media.

Electronic O&M manuals shall contain information in standard formats (searchable Adobe PDF, Word, AutoCAD, HTML, etc.) and shall be easily accessible using standard, “off-the-shelf” software such as an Internet browser. Raster scans will not be accepted

1.08 Delivery, Storage, and Handling

A. Not Used

1.09 Spare Parts, Special Tools, and Supplies

A. Not Used

1.10 Special Warranty Provisions / Guarantee Periods

A. Not Used

PRODUCTS

1.11 Manufacturers

A. Not Used

1.12 Materials / Equipment

A. Not Used

1.13 Fabrication / Assembling / Finishes

A. Not Used

1.14 Source Quality Control / Shop Tests

A. Not Used

EXECUTION

1.15 Examination / Preparation

A. Not Used

1.16 Installation

A. Not Used

1.17 Field Testing / Quality Control

A. Not Used

1.18 Startup / Demonstration

A. Not Used

1.19 Adjusting / Protection / Cleanup

A. Not Used

END OF SECTION

NO TEXT ON THIS PAGE

40 61 22 TOOLS, SUPPLIES, AND SPARE PARTS

GENERAL

01 Summary

A. The Contractor shall provide tools, supplies, and spare parts as specified herein for the operation and maintenance of the Control and Information System.

1.02 Payment

A. Payment for the work of this Section shall be through Lump Sum Bid Item No.

ESCR-51.12P, including tools, supplies, and spare parts for control systems in accordance with the plans, specifications, and standards. .

B. The Contractor shall include in Bid Item ESCR-51.12P the items list in the table under article 1.09 E . The Contractor shall make payments to the respective manufacturers/ suppliers according to the schedule below:

1 5% upon receipt of spare parts listed in the table under article 1.09 E for sections 26 05 91 Low-Voltage Electric Motors

2. 5% upon approval by City of all shop drawings including sub-assemblies and components for the control systems. Partial payments as shop drawings are approved will be permitted.

3. 5% upon receipt of spare parts listed in the table under article 1.09 E for sections 26 09 16 Electric Control Relays and 26 28 13 Low Voltage Fuses

4. 10% upon receipt of spare parts listed in the table under article 1.09 E for section 26 29 13 Enclosed Controllers

5.. 10% upon receipt of spare parts listed in the table under article 1.09 E for section 26 29 13.16 Low-Voltage Enclosed Motor Controllers - Reduced Voltage

6. 5% upon receipt of spare parts listed in the table under article 1.09 E for sections 40 05 06 Couplings, Adapters, and Specials for Process Piping and 40 05 56 Process Valves, Smaller than 4-inch Diameter

7 10% upon receipt of spare parts listed in the table under article 1.09 E for section 40 05 59.01 Interceptor Gates

8. 5% upon receipt of spare parts listed in the table under article 1.09 E for section 40 66 00 Process Control System Networks

9. 10% upon receipt of spare parts listed in the table under article 1.09 E for sections 40 66 53 Telemetry System and 40 67 16 PMCS Panels and Enclosures

10 10% upon receipt of spare parts listed in the table under article 1.09 E for section 40 78 90 PMCS Panel Mounted Instruments and Devices

11 10% upon receipt of spare parts listed in the table under article 1.09 E for sections 43 23 13.02 pumping units and the 40 73 13 Pressure and Differential Pressure Gauges

12. 5% upon receipt of spare parts listed in the table under article 1.09 E for sections 40 70 00 Instrumentation for Process Systems and 40 78 56 and Isolators, Intrinsically Safe Barriers, and Surge Suppressors

13. 5% upon shipment from fabrication facility

14. 5% upon delivery of O&M manuals, orientation and spare parts (delivery of O&M manuals, training and spare parts is to be completed once; therefore, completion of this task shall be a 5% payment for the control systems)

C. The Contractor shall be responsible for all costs associated with having the manufacturer/ supplier present at each installation site should the Contractor require more days of installation instruction.

1.03 Related Sections

A. See table in Part 1.09.E. below.

1.04 References

A. Not Used

1.05 Description

A. Provide special tools, other than those normally found in an electronic technician's tool box, required to test, diagnose, calibrate, install, wire, connect, disconnect, assemble and disassemble any digital equipment, instrument, panel, rack, cabinet or console mounted equipment for service and maintenance. This shall include, but not be limited to, the following: connector pin insertion and removal tools, wire crimping tools, special wrenches, special instrument calibrators, indicator lamp insertion and removal tools, etc.

B. Provide tools and test equipment together with items such as instruction manuals, carrying/storage cases, unit battery charger where applicable, special tools, calibration fixtures, cord extenders, patch cords and test leads, which are not specified but are necessary for checking field operation of equipment supplied under this Division.

1.06 Quality Assurance

A. Not used.

1.07 Submittals

A. Not Used

1.08 Delivery, Storage, and Handling

A. Not Used

1.09 Spare Parts, Special Tools, and Supplies

A. Provide spare parts for items of control and instrumentation equipment as recommended by the manufacturer and in accordance with the Contract Documents.

B. Furnish all spares in moisture-proof boxes designed to provide ample protection for their contents. Label all boxes to clearly identify contents and purpose.

C. The Contractor shall replace all spare parts consumed during installation, testing, start-up, the system availability demonstration, and the guarantee period.

D. Refer to individual digital hardware and instrument sections for additional requirements specific to those devices.

E. The Contractor shall provide supplies as specifically required below:

SANDRESPC IG-PC PAGES Spare Parts Included in item ESCR 51.12P			
SPECIFICATION SECTION	**SPECIFICATION TITLE**	**PARAGRAPH NUMBER**	**SPARE PART ITEM DESCRIPTION IN SPECIFICATION**
26 05 91	Low-Voltage Electric Motors	1.09	Bulk Lubricant
26 09 16	Electric Control Relays	1.09	1 Block of each type; 1 indicating light lens of each color; 1 LED lamp of each color
26 28 13	Low Voltage Fuses	1.09	Fuses: 10% of each rating used and minimum of 3 of each rating

26 29 13	Enclosed Controllers	1.09	1. One (1) set of contact tips, shunts and coils shall be provided for each 6 or less of each size motor starter. 2. One (1) auxiliary contact unit or one set of auxiliary contact tips shall be provided for each 6 or less motor starter. 3. One (1) timing relay shall be provided of each type installed as part of control equipment installation. 4. One (1) complete auxiliary relay shall be provided of each type installed as part of control equipment installation. 5. One (1) control transformer shall be provided of each rating and type installed as part of control equipment installation. 6. Two (2) complete sets of fuse replacements shall be provided of each rating and type installed as part of control equipment installation.
26 29 13.16	Low-Voltage Enclosed Motor Controllers - Reduced Voltage	1.09	1. One (1) solid state overload relay for each type, size, and rating used. 2. One (1) motor circuit protector & motor contactor for each type, size, and rating used. 3. One (1) spare control power transformer for each type and size used.
40 05 06	Couplings, Adapters, and Specials for Process Piping	1.09	6 swivel joint spare nozzles, for the flushing systems of the same type, size and service furnished

40 05 56	Process Valves, Smaller than 4-inch Diameter	1.09	Spare valves shall be furnished for each type and size of valve installed as follows: - 1 set of spares per 1-5 valves installed of a given type and size -2 sets of spares per 6-10 valves installed of a given type and size -3 sets of spares per 11-15 valves installed of a given type and size -5 sets of spares per 16-30 valves installed of a given type and size -1 additional spare set per every 10 additional valves for quantities greater than 30.
40 05 59.01	Interceptor Gates	1.09	1. For each Interceptor and Bypass Slide Gate and Components: -Two (2) sets of O-rings, seals and gaskets for every size and type -One (1) complete, full circumference interceptor gate seal assembly -One (1) complete bypass gate seal -One (1) directional control valve for every size and type -One (1) torsion tube bearing for every size and type 2. 50 gallons of EcoSafe EHC FR-46 oil in un-opened original container 3. 10 feet of hydraulic hose and 10connectors of every size and type in accordance with hydraulic hose listed in Article 1.11.B. 4. Dogging pin access cover and all required gaskets and fasteners
40 61 22	Tools, Supplies, and Spare Parts	1.09	As recommended by the manufacturer, in accordance with Contract Documents

40 66 00	Process Control System Networks	1.09	Termination tool kit and consumables for up to 25 connections of each connecting type; one spare switch of each type.
40 66 53	Telemetry System	1.03	One of each type of cellular modem; one of each type of misc. hardware device for telemetry eqpt.; one hand-held diagnostic terminal; one spare antenna
40 67 16	PMCS Panels and Enclosures	1.09	1. Ten (10) percent (minimum of 1), spare space heaters of each type and rating. 2. Ten (10) percent (minimum of 1), spare heater thermostats of each type 3. One (1) spare lighting fixture and switch of each type provided. 4. Ten (10) percent (minimum of 2), spare power supply, regulator, power conditioner, etc., of each type and rating provided. 5. Ten (10) percent (minimum of 1), spare thermal control device (fan, air conditioner, heat exchanger, etc.) for each type and rating provided. 6. Ten (10) percent (minimum of 10), spare fuses, circuit breakers, equipment mounting (DIN) rails. 7. Twenty-five (25) percent (minimum of 100) spare terminals of each type provided for the entire project. 8. Spare parts as recommended by the individual equipment manufacturers

40 70 00	Instrumentation for Process Systems	1.09	Additional items as recommended by analytical instrument manufacturers
40 73 13	Pressure and Differential Pressure Gauges	1.09	Other than diaphragm protected gauges, 20% spare gauges of each range used; for diaphragm protected gauges, 20% of each range used, complete with diaphragm seals, filled and ready for use.
40 78 56	Isolators, Intrinsically Safe Barriers, and Surge Suppressors	1.09	One of each type of surge protection device
40 78 90	PMCS Panel Mounted Instruments and Devices	1.09	1. One PMID for every five (5) PMID of a given model furnished, minimum of one. 2. One (1) communication card for every five (5) of each type furnished, minimum of one. 3. One (1) power supply for every (5) of each size furnished, minimum of one. 4. All spare parts recommended by manufacturer and listed as recommended spare parts in the manufacturer's submitted O&M Manual.

43 23 13.02	Pumping Units	1.09	1. Two (2) sets of all eyebolts, special tools, made specifically for the pump, gages and fixtures which are required to operate, disassemble and maintain each type of pumping unit shall be furnished in neat special steel cases fitted with locks and keys. 2. Where oil lubricated equipment is used, a minimum of one (1) gallon of oil of types approved by the equipment manufacturer, or sufficient oil, for a minimum of three years of operation shall be supplied, whichever is greater 3. A minimum of six (6) tubes of grease or sufficient grease for a minimum of three years of operation shall be supplied, whichever is greater. 4. One pump repair kit consisting of: -One (1) complete set of impeller and casing wearing rings, for each five (5) pumps or less of the same type, size and service furnished. -One (1) shaft sleeve for each five (5) pumps or less of the same type, size and service furnished. -One (1) impeller with keys and bolts for each five (5) pumps or less of the same type, size and service furnished. -One (1) complete set of mechanical seals or of packing glands complete with lantern rings and silicon bronze bolting elements for each five (5) pumps or less of the same type, size and service furnished. -One (1) complete set of gaskets for each and every pump furnished. -Packing sufficient for six (6) renewals for each and every pump furnished. -One (1) complete set of pump foundation mounting/anchor bolts.

1.10 Special Warranty Provisions / Guarantee Periods

A. Not Used

PRODUCTS

1.11 Manufacturers

A. One (1) Portable graphical multimeter with rechargeable battery, test leads, industrial lead set, and carrying case, Fluke Model 289, Simpson, or equal.

B. Furnish one portable 4-20 mA, 24 VDC analog loop signal generator for calibration and testing of analog signal loops. Generator shall be furnished with rechargeable battery pack, test leads, spare battery pack, charger, carrying case and accessories. Signal generator shall be Fluke 787 ProcessMeter, or equal.

C. Furnish one portable calibrator capable of measuring DC volts, mV, mA, ohms, frequency, T/C, peak detect and trip detect on its input and simultaneously generate on its output all of the preceding signals plus two-wire simulation, ramp functions, up/down stepping and 10 point programmability. The calibrator shall be furnished complete with 24 VDC integral battery pack, spare battery pack, test leads, external charger, fuse pack, carrying case and appurtenances. It shall be possible to store and use automatic instrument calibration procedures that are downloaded from Windows-based instrument management software. Calibrator shall be Fluke 789 ProcessMeter, Ametek CL-9000, or equal.

D. A complete computer technician kit in an injection molded or high density polyethylene case. The kit shall be Model JTK-49 Workstation Kit by Stanley Supply Services of Phoenix, AZ, or a computer technician kit of equivalent equipment and valued

1.12 Materials / Equipment

A. Not Used

1.13 Fabrication / Assembling / Finishes

A. Not Used

1.14 Source Quality Control / Shop Tests

A. Not Used

EXECUTION

1.15 Examination / Preparation

A. Not Used

1.16 Installation

A. Not Used

1.17 Field Testing / Quality Control

A. Not Used

1.18 Startup / Demonstration

A. Not Used

1.19 Adjusting / Protection / Cleanup

A. Not Used

Payment will be made under:

Item No.	***Description***	***Pay Unit***
ESCR-51.12P	INTERCEPTOR GATE SPARE PARTS	LS

END OF SECTION

40 61 23 SIGNAL COORDINATION REQUIREMENTS

GENERAL

1.01 Summary

A. The Contractor shall furnish, test, install and place in satisfactory operation all instrumentation as herein specified and as shown on the Drawings.

B. The Contractor shall be responsible for coordinating signal types and transmission requirements between the various parties providing equipment under this Contract. This shall include, but not be limited to, distribution of appropriate shop drawings among the equipment suppliers, the electrical subcontractor, the HVAC subcontractor etc.

C. Analog signals shall be signals for transmitting process variables, etc. from instruments and to and from panels, equipment PLCs and Control System PLCs.

D. Discrete signals shall consist of contact closures or powered signals for transmitting status/alarm information and control commands between starters, panels, equipment PLCs, the Control System, etc

1.02 Payment

A. There is no separate payment provision for this section.

1.03 Related Sections

A. Not Used

1.04 References

A. Not Used

1.05 Description

A. Analog Signal Transmission

Signal transmission between electric or electronic instruments, controllers, and all equipment and control devices shall be individually isolated, linear 4-20 milliamperes and shall operate at 24 VDC.

Signal output from all transmitters and controllers shall be current regulated and shall not be affected by changes in load resistance within the unit's rating.

All cable shields shall be grounded at one end only, at the control panel, with terminals bonded to the panel ground bus.

Analog signal isolation and/or conversion shall be provided where necessary to interface with instrumentation, equipment controls, panels, and appurtenances.

Non-standard transmission systems such as pulse duration, pulse rate, and voltage regulated shall not be permitted except where specifically noted in the Contract Documents. Where transmitters with nonstandard outputs do occur, their outputs hall be converted to an isolated, linear, 4-20 milliampere signal.

The Contractor shall provide 24 V power supplies for analog signals and instruments where applicable and as required inside panels, controls, etc.

Where two-wire instruments transmit directly to the Control and Information System, the Contractor shall provide power supplies at the PLC-equipped control panels for those instruments.

Where four-wire instruments with on-board loop power supplies transmit directly to the Control and Information System, the Contractor shall provide necessary signal isolators or shall otherwise isolate the input from the Control and Information System loop power supply. Similar provisions shall be made when a third element such as a recorder, indicator, or single loop controller with integral loop power supply is included in the loop.

B. Discrete Inputs

All discrete inputs to equipment and Control and Information System PLCs, from field devices, starters, panels, etc., shall be unpowered (dry) contacts in the field device or equipment, powered from the PLCs, unless specified otherwise.

Sensing power (wetting voltage) supplied by the PLC shall be 24 VDC

C. Discrete Outputs

All discrete outputs from local control panels and Control and Information System PLCs to field devices, starters, panels, etc., shall be 24 VDC powered (sourced) from PLC's.

PLC powered discrete outputs shall energize 24 VDC pilot relay coils in the field devices, starters, panels, etc. which in turn open or close contacts in the associated control circuit. The 24 VDC relay coil, contacts, and associated control circuitry shall be furnished integral with the field device, starter, panel, etc. by the supplier and contractor furnishing the field device, starter, or panel.

Where required or specified herein, discrete outputs from equipment and Control and Information System PLC's to field devices, starters, panels, motor operated valves, etc., shall be dry contact or relay outputs.

Outputs to solenoid valves shall be 120 VAC, powered from the PLC or control panel unless specified or shown otherwise

D. Other Discrete Signals

Discrete signals between starters, panels, etc. where no 24 VDC power supply is available may be 120 VAC, as long as such contacts are clearly identified in the starter, panel, etc. as being powered from a different power supply than other starter/panel components.

Where applicable, warning signs shall be affixed inside the starter, panel, etc. stating that the panel is energized from multiple sources.

Output contacts in the starter, panel, etc., that are powered from other locations shall be provided with special tags and/or color-coding. Disconnecting terminal strips shall be provided for such contacts.

The above requirements shall apply to all starters and panels, regardless of supplier.

1.06 Quality Assurance

A. Not used.

1.07 Submittals

A. Not Used

1.08 Delivery, Storage, and Handling

A. Not Used

1.09 Spare Parts, Special Tools, and Supplies

A. Not Used

1.10 Special Warranty Provisions / Guarantee Periods

A. Not Used

PRODUCTS

1.11 Manufacturers

A. Not Used

1.12 Materials / Equipment

A. Not Used

1.13 Fabrication / Assembling / Finishes

A. Not Used

1.14 Source Quality Control / Shop Tests

A. Not Used

EXECUTION

1.15 Examination / Preparation

A. Not Used

1.16 Installation

A. Not Used

1.17 Field Testing / Quality Control

A. Not Used

1.18 Startup / Demonstration

A. Not Used

1.19 Adjusting / Protection / Cleanup

A. Not Used

END OF SECTION

40 61 24 QUALITY ASSURANCE FOR CONTROL SYSTEMS

GENERAL

1.01 Summary

A. It is the intent of these Specifications and Drawings to secure high quality in all materials, equipment and workmanship in order to facilitate operations and maintenance of the facility. The Contractor shall provide equipment and services to meet this intent.

1.02 Payment

There is no separate payment provision for this section.

1.03 Related Sections

Not Used

1.04 References

All work shall be installed in accordance with the National Electric Code (NEC), National Electric Safety Code, OSHA, State, local and other applicable codes.

1.05 Description

Not Used

1.06 Quality Assurance

All equipment and materials shall be new and the products of reputable recognized suppliers having adequate experience in the manufacture of these particular items.

For uniformity, only one manufacturer will be accepted for each type of product.

All equipment shall be designed for the service intended and shall be of rugged construction, of ample strength for all stresses that may occur during fabrication, transportation, and erection as well as during continuous or intermittent operation. They shall be adequately stayed, braced and anchored and shall be installed in a neat and workmanlike manner. Appearance and safety, as well as utility, shall be given consideration in the design of details.

All components and devices installed shall be standard items of industrial grade, unless otherwise noted, which shall be of sturdy and durable construction and be suitable for long, trouble-free service.

Electronic components shall be de-rated to assure dependability and long-term stability.

Printed circuit boards in field mounted equipment shall be suitable for the specified environmental conditions.

Alignment and adjustments shall be non-critical, stable with temperature changes or aging and accomplished with premium grade potentiometers.

Components of specially selected values shall not be inserted into standard electronic assemblies in order to meet the performance requirements of this specification.

1.07 Submittals

Not Used

1.08 Delivery, Storage, and Handling

In addition to shipping, handling and storage requirements specified elsewhere in the Contract Documents, air conditioning/heating shall be provided for storage of all field instrumentation, panels, digital equipment and ancillary devices to maintain temperatures between 20 and 25 degrees C and relative humidity 40 to 60 percent without condensation. The air shall be filtered and free of corrosive contaminants and moisture.

1.09 Spare Parts, Special Tools, and Supplies

Not Used

1.10 Special Warranty Provisions / Guarantee Periods

The Contractor shall install, maintain and guarantee the Instrumentation, Control and Information System as specified in the Specifications. Maintenance personnel provided by the Contractor shall instruct the City's personnel in the operation, adjustment, calibration and repair of the equipment being serviced. All preventive and corrective activities shall be documented with service reports, which shall identify the equipment being serviced, state the condition of the equipment, describe all work performed and list materials used. A copy of all service reports shall be delivered to the City on the day the work is performed.

The Contractor shall provide the services of factory-trained service technician(s) at least twice during the guarantee period, for the purpose of performing preventive hardware maintenance.

Corrective hardware and software maintenance during the guarantee period shall be performed in accordance with the requirements of Division 1 and, in addition, shall meet the following requirements:

a. Corrective hardware maintenance shall be performed by factory-trained service technician(s) specifically trained to service the digital equipment provided. Technicians possessing suitable training and experience shall be provided to perform corrective maintenance on all other equipment. The hardware service technician(s) shall be available on-site within 24 working hours after notification by the City.

b. Corrective software maintenance shall be performed for software provided by the Contractor and incorporated into the system prior to the completion of system commissioning. Software service programmer(s) shall be available for consultation within four business hours and, if required, on-site within 16 business hours after notification by the City. Corrective software maintenance shall include the supply, installation and startup of all application software upgrades released during the guarantee period.

c. Corrective hardware and software maintenance performed during the guarantee period shall be performed at no cost to the City.

d. The guarantee period shall commence upon final acceptance of the completed interceptor gate facility in accordance with the provisions of the Contract Documents.

PRODUCTS

1.11 Manufacturers

A. Not Used

1.12 Materials / Equipment

A. Not Used

1.13 Fabrication / Assembling / Finishes

A. Fabrication of all equipment shall conform to the codes and standards outlined in this Section, and other portions of the Contract Documents.

B. The Engineer may inspect the fabricated equipment at the factory before shipment to job site. The Contractor shall provide the Engineer with sufficient prior notice so that an inspection can be arranged at the factory. Inspection of the equipment at the factory by the Engineer will be made after the manufacturer has performed satisfactory checks, adjustments, tests and operations.

C. Equipment approval at the factory only allows the equipment to be shipped to the project site. The Contractor shall provide for the proper storage, installation and satisfactory start-up and operation of the equipment to the satisfaction of the equipment manufacturer and the Engineer

1.14 Source Quality Control / Shop Tests

A. Not Used

EXECUTION

1.15 Examination / Preparation

A. Not Used

1.16 Installation

A. All instrumentation and control system installation work, whether new construction or modifications to existing equipment/panels/structures, shall conform to the codes and standards outlined in this Section, and other portions of the Contract Documents.

B. The Contractor shall assign a competent representative who shall provide full time coordination and supervision of all on-site instrumentation and control system construction work from commencement of construction through completion and final acceptance.

C. All labor shall be performed by qualified craftsmen in accordance with the standards of workmanship in their profession and shall have had a minimum of three years of documented experience on similar projects.

D. All equipment and materials shall fit properly in their installations. Any required work to correct improperly fit installations shall be performed at no additional expense to the City.

E. All work shall be performed in a neat and workmanlike manner. All hardware and instrumentation shall be installed in accordance with requirements specified herein, in

accordance with industry best practices, in accordance with manufacturers' recommendations, and in a manner suitable for ease of operation, inspection, and maintenance. All wiring shall be neatly bundled, run in wireway, and terminated. All spare wiring shall be neatly coiled and clearly labeled at both ends for future use by the City. Any work not meeting these requirements shall be corrected at no expense to the City.

F. Sufficient common-mode and differential-mode noise rejection shall be provided to insure operation of the process control system to meet all specification requirements. General practice shall include:

Maintaining crossings between noisy wires and signal wires at right angles.

Maintaining separation between noisy wires and signal wires as wide as practical.

Grounding all signals, shields and power supplies at the process control unit or local control panel.

Providing passive filters on signals with time constant compatible with scan intervals and overvoltage protection.

Eliminating cable splices. All splices in instrumentation and control system signal and network cables shall be approved in advance by the Engineer.

Providing a floating output for transmitters that have their own power sources.

G. DC and AC power grounding shall be performed in accordance with the digital hardware manufacturer's recommendations as well as all applicable code requirements.

H. The case of each field instrument and control panel shall be grounded in compliance with the National Electric Code.

I. Power wires shall be separated from parallel-running signal wires by the following minimum spacing:

J. Circuit Voltage (VAC) Minimum Spacing (IN.)

120VAC: 12in

240VAC: 18in

480VAC: 18in

2000VAC and above: 24in

K. The Contractor shall provide all required cutting, drilling, inserts, supports, bolts, and anchors, and shall securely attach all equipment and materials to their supports. Embedded supports for equipment furnished under this Division shall be provided and installed as shown specified herein and shown on the Drawings.

L. Following acceptance of the factory tests by the Engineer, and in accordance with the construction schedule, the Contractor shall commence installation of the digital control system hardware. Digital system equipment items shall not be installed, however, until all architectural, mechanical, HVAC and electrical work has been completed in the equipment rooms, MCC's, control rooms and all structural and/or mechanical work has been completed within 50 feet of equipment locations.

M. Upon completion of the above construction work, the Contractor shall request an inspection of the above-named areas. The Engineer will issue a written approval to proceed with delivery and installation only after being satisfied that all work described above has been properly performed. Digital equipment shall remain at the factory site or storage prior to approval for delivery to the project site. Partial shipments may be required to meet construction schedule requirements

1.17 Field Testing / Quality Control

A. Not Used

1.18 Startup / Demonstration

A. Not Used

1.19 Adjusting / Protection / Cleanup

A. Not Used

END OF SECTION

40 61 26 PMCS TRAINING

GENERAL

1.01 Summary

A. The Contractor shall provide all labor, materials, equipment and incidentals as shown, specified and required to furnish and coordinate all required training at times acceptable to the City and the Engineer.

1.02 Payment

A. There is no separate payment provision in this Section.

1.03 Related Sections

A. Section 01 75 10 - Preliminary and Final Field Tess

B. Section 01 79 05 - Equipment Startup and Training

C. Section 40 61 13 - PMCS General Requirements

1.04 References

A. Definitions

Section 40 61 13 – PMCS General Requirements defines the terms abbreviations used in this Section and the PMCS

B. Reference Standards

Section 40 61 13 – PMCS General Requirements lists the standards applicable to the PMCS.

1.05 Description

A. General

The Contractor shall retain the services of the PMCS Supplier to provide and perform standardized, structured training courses off site and on site, as specified in this Section, and the Specifications covering both operation and maintenance of the PMCS equipment.

On-Site Training

a. On-site training shall be within the Plant where the PMCS will be installed.

b. On-site training shall make extensive use of the installed PMCS to ensure Plant personnel develop an enhanced understanding and level of comfort with the PMCS.

c. On-site training submittals which in the opinion of the Engineer does not meet the objectives stated in this Section and the Specifications shall be rejected.

Off-site Training

d. Off-site training shall be conducted at an approved facility within a 10-mile radius of the Contract site.

All training, except Follow-up Training specified in this Section, shall be scheduled so that it is completed prior to Acceptance of the PMCS by the City.

The City will send the following personnel to attend training courses:

e. Operations Training – 10 persons

f. Maintenance Training - 10 persons

g. Supervisor Training - 5 persons

h. Engineer Training - 5 persons

All training shall be conducted during the hours of 8:00 AM to 12:00 AM until the conclusion of the training course.

All training sessions shall be provided twice and shall be scheduled by the City to accommodate their shift schedule.

1.06 Quality Assurance

A. General:

For equipment items not manufactured by the PMCS Supplier, the PMCS Supplier shall provide for training by an authorized representative of the equipment manufacturer as part of PMCS Supplier services.

The manufacturer's representative shall be fully knowledgeable in the operation and maintenance of the equipment.

B. Supplier's Qualifications

Section 40 61 13 – PMCS General Requirements specifies the PMCS Supplier's training qualifications.

C. Supplier's Responsibility:

Section 40 61 13 – PMCS General Requirements specifies the PMCS Supplier's training responsibility.

D. System Supplier Training Personnel

The Contractor shall require the System Supplier to provide the following training personnel:

a. Lead Trainer

1) The System Supplier shall appoint a Lead Trainer who shall coordinate, schedule and conduct all work and assure that the Training schedule is met.

2) The Lead Trainer shall have a minimum of ten (10) years' experience in coordination, scheduling and delivery of instrumentation and control training at/under similar Facilities as this Contract including a thorough working knowledge of training administration as both a prime and sub-prime Vendor/Contractor.

3) The Lead Trainer shall be the PMCS Supplier's liaison with the Contractor for the all PMCS training requirements and shall assist in all matters required for proper coordination and interfacing of the training with the City.

1.07 Submittals

A. Shop Drawings General

Within 90 days of the effective Notice to Proceed, the Contractor shall submit for approval of the Engineer, Shop Drawings detailing the proposed plan for training, including but not limited to all course outlines and schedules.

Shop Drawing preparation shall not commence until after the pre-submittal specified in Section 40 61 13 – PMCS General Requirements.

Shop Drawings shall be submitted in complete packages grouped to permit review of related items as generally outlined in this Section.

B. Reports:

Training reports shall be submitted to the Engineer.

1.08 Delivery, Storage, and Handling

A. The PMCS training equipment and materials shall be delivered, stored and handled in accordance with this Section, the Specifications, the PMCS Supplier's recommendations and the following:

PMCS training equipment and shall be packaged to protect each item from damage during shipment and storage.

Containers shall be protected against impact, abrasion, corrosion, discoloration and/or other damages.

Clearly label contents of each container and provide information on the required storage conditions necessary for the equipment and materials.

PMCS training equipment and materials shall be inspected for shipping damage or loose parts when received.

Evidence of water which may have entered equipment during transit shall be checked.

PMCS training equipment and materials shall be stored in a clean dry location in which a uniform temperature is maintained.

PMCS training equipment and materials shall be protected in storage with suitable covering and air circulation maintained to ensure the equipment and materials are kept dry and free from condensation.

1.09 Spare Parts, Special Tools, and Supplies

A. Not Used

1.10 Special Warranty Provisions / Guarantee Periods

A. Not Used

PRODUCTS

1.11 Manufacturers

A. PMCS Training shall be as delivered by the approved PMCS Supplier.

1.12 Materials / Equipment

A. Not Used

1.13 Fabrication / Assembling / Finishes

A. Not Used

1.14 Source Quality Control / Shop Tests

A. Not Used

EXECUTION

1.15 Examination / Preparation

A. Not Used

1.16 Application

A. Not Used

1.17 Field Testing / Quality Control

A. Not Used

1.18 Startup / Demonstration

A. Off-Site Training

Operator Training

a. Provide a 4 days, 8 hours per day course covering the structure and the functions of the PMCS, its components and devices.

b. The course shall familiarize the Operator with the procedures for applying the PMCS to process control situations or scenarios and develop operator issue resolution capability.

c. As a minimum, the course shall cover the following topics:

1) Overview of PMCS functional capabilities.

2) Equipment overview including PMCS component functions, operating principles and proper use.

3) Loading and start-up of the digital system hardware components.

4) Use of PMCS commands.

5) Development of programs and control schemes.

6) Development and use of system displays.
7) Programming concepts and techniques.
8) Use of bulk storage device for system backup.

Maintenance Training Course:

d. Provide 4 days, 8 hours per day course covering preventive and troubleshooting maintenance for the PMCS components.

e. The course shall familiarize the maintenance personnel with diagnostic capabilities of the system, both software and hardware, and also the routine maintenance procedures on the system and the common peripheral devices.

f. As a minimum the course shall cover the following topics:
1) PMCS overview description including the relay logic components, the power subsystems and logic components of the processor bus.
2) Description of the maintenance and troubleshooting aids of the system including software diagnostic programs.
3) Description of all bus operations.
4) Description of peripheral and process interface devices.
5) The use of hardware diagnostic routines, test equipment and test procedures as required to enable the City's personnel to detect and isolate system faults to the relay logic component, the circuit board or module level and to implement repairs by replacing failed relay logic components, circuit boards or modules.

Supervisor/Engineer Training

g. Provide a 2 days, 8 hours per day course in the use and configuration of the PMCS.

h. The level of training shall be sufficient to familiarize the City personnel (project management personnel, engineers, and key operating/maintenance personnel) with the configuration and application of all PMCS programs, equipment and logic.

i. All essential system operating procedures shall be described as required to enable the City personnel to operate and configure the PMCS via all interfaces such as Work Stations, OIT/HMI Screens and local control panels.

j. Upon completion of the training the City personnel shall be able to make modification to Control Strategies and have them run in the PMCS.

k. Training shall be provided including but not limited to the following systems/subjects:

1) Flushing System
2) Booster Pumps
3) MOVs
4) Telemetry System

B. On-Site Training

Operation and Maintenance training shall be provided by the PMCS supplier and equipment manufacturer representatives.

Training shall accomplish the following:

a. Provide instruction covering use and operation of equipment to perform the intended functions.
b. Provide instruction covering procedures for routine, preventive and troubleshooting maintenance including equipment calibration.
c. Explain procedures for placing equipment in and out of operation.
d. Explain the necessary action and precautions to be taken regarding the overall PMCS.

C. Follow-up Training

The PMCS Supplier shall provide operation and maintenance training covering all PMCS equipment provided.

The Follow-up Training shall take place 6 months after Acceptance of the PMCS by the City.

The Follow-up Training shall repeat the On-Site Training specified in this Section.

The Follow-up Training shall in addition, target those areas of PMCS equipment where Plant personnel have highlighted either operational or maintenance issues.

1.19 Adjusting / Protection / Cleanup

A. Not Used

END OF SECTION

40 61 91 PROCESS CONTROL SYSTEM INSTRUMENT LIST

GENERAL

1.01 Summary

A. The Contractor shall furnish, test, install and place in satisfactory operation all instrumentation as herein specified and as shown on the Drawings.

1.02 Payment

A. There is no separate payment provision for this section.

1.03 Related Sections

A. Section 40 61 93 – PMCS Input/Output List

B. Section 40 61 96 – Process Control Descriptions

1.04 References

A. Refer to Table 40 61 91 following this section.

1.05 Description

A. Items of equipment listed in the instrument schedule, control panels, and digital hardware items shall be identified with nameplates. Each nameplate shall be located so that it is readable from the normal observation position and is clearly associated with the device or devices it identifies. Nameplates shall be positioned so that removal of the device for maintenance and repair shall not disturb the nameplate. Nameplates shall include, as necessary, the equipment identification number, description, calibrated range, and set point(s). Abbreviations of the description shall be subject to the Engineer's approval.

B. Nameplates shall be made of 1/16-inch thick machine engraved laminated phenolic plastic having white numbers and letters not less than 3/16-inch high on a black background. Nameplates attached to instruments may be black laser etched 1/8-inch high text on stainless steel with sharp edges made smooth. Stamped text shall not be acceptable.

C. Nameplates shall be attached to metal equipment by NEMA rated stainless steel screws and to other surfaces by an epoxy-based adhesive that is resistant to oil and moisture. In cases where the label cannot be attached by the above methods, it shall be drilled and attached to the associated device by means of a braided stainless steel wire affixed with a permanent crimp.

D. Submit sample nameplate of each type.

1.06 Quality Assurance

A. Not used.

1.07 Submittals

A. Not Used

1.08 Delivery, Storage, and Handling

A. Not Used

1.09 Spare Parts, Special Tools, and Supplies

A. Not Used

1.10 Special Warranty Provisions / Guarantee Periods

A. Not Used

PRODUCTS

1.11 Manufacturers

A. Not Used

1.12 Materials / Equipment

A. Not Used

1.13 Fabrication / Assembling / Finishes

A. Not Used

1.14 Source Quality Control / Shop Tests

A. Not Used

EXECUTION

1.15 Examination / Preparation

A. Not Used

1.16 Installation

A. Not Used

1.17 Field Testing / Quality Control

A. Not Used

1.18 Startup / Demonstration

A. Not Used

1.19 Adjusting / Protection / Cleanup

A. Not Used

SECTION 40 61 91 – PROCESS CONTROL SYSTEM INSTRUMENT LIST

SPECIAL WORKS – IG/PC

40 61 91 – 1 - TABLE – PROCESS CONTROL SYSTEM INSTRUMENT LIST

TAG	SERVICE DESCRIPTION	RANGE / (SETPOINT)	PIPE SIZE	SECTION	P&ID	NOTES
PIT-001	FLUSH SYSTEM SUCTION PRESSURE	20 to 80 PSIG (50 PSIG)	4"	40 73 20	I-03	NORTH CONTROL BLDG.
PI-001A	BP-001 SUCTION PRESSURE	20 to 80 PSIG	4"	40 73 13	I-03	NORTH CONTROL BLDG.
PI-001B	BP-001 DISCHARGE PRESSURE	70 to 130 PSIG	4"	40 73 13	I-03	NORTH CONTROL BLDG.
PI-002A	BP-002 SUCTION PRESSURE	20 to 80 PSIG	4"	40 73 13	I-03	NORTH CONTROL BLDG.
PI-002B	BP-002 DISCHARGE PRESSURE	70-130 PSIG	4"	40 73 13	I-03	NORTH CONTROL BLDG.
PIT-004	FLUSH SYSTEM DISCHARGE PRESSURE	0 to 130 PSIG	4"	40 73 20	I-03	NORTH CONTROL BLDG.
FS-004	FLUSH SYSTEM DISCHARGE FLOW	0 to 500 GPM (100GPM)	4"	40 71 79.14	I-03	NORTH CONTROL BLDG.
ZSC-005A	BG-005 GATE CLOSED POSITION SWITCH	N/A	N/A	40 05 59	I-03	NORTH CONTROL BLDG. PROVIDED BY GATE MANUFACTURER
ZSO-005A	BG-005 GATE OPEN POSITION SWITCH	N/A	N/A	40 05 59	I-03	NORTH CONTROL BLDG. PROVIDED BY GATE MANUFACTURER
ZSC-006A	IG-006 GATE CLOSED POSITION SWITCH	N/A	N/A	40 05 59	I-03	NORTH CONTROL BLDG. PROVIDED BY GATE MANUFACTURER

SECTION 40 61 91 – PROCESS CONTROL SYSTEM INSTRUMENT LIST

SPECIAL WORKS – IG/PC

TAG	SERVICE DESCRIPTION	RANGE / (SETPOINT)	PIPE SIZE	SECTION	P&ID	NOTES
ZSM-006A	IG-006 GATE MID-POINT POSITION SWITCH	N/A	N/A	40 05 59	I-03	NORTH CONTROL BLDG. PROVIDED BY GATE MANUFACTURER
ZSO-006A	IG-006 GATE OPEN POSITION SWITCH	N/A	N/A	40 05 59	I-03	NORTH CONTROL BLDG. PROVIDED BY GATE MANUFACTURER
ZSC-006B	IG-006 LOWER DOGGING PIN EXTENDED POSITION SWITCH	N/A	N/A	40 05 59	I-03	NORTH CONTROL BLDG. PROVIDED BY GATE MANUFACTURER
ZSO-006B	IG-006 LOWER DOGGING PIN RETRACTED POSITION SWITCH	N/A	N/A	40 05 59	I-03	NORTH CONTROL BLDG. PROVIDED BY GATE MANUFACTURER
ZSC-006C	IG-006 UPPER DOGGING PIN EXTENDED POSITION SWITCH	N/A	N/A	40 05 59	I-03	NORTH CONTROL BLDG. PROVIDED BY GATE MANUFACTURER
ZSO-006C	IG-006 UPPER DOGGING PIN RETRACTED POSITION SWITCH	N/A	N/A	40 05 59	I-03	NORTH CONTROL BLDG. PROVIDED BY GATE MANUFACTURER
PIT-010	FLUSH SYSTEM SUCTION PRESSURE	20 to 80 PSIG (50 PSIG)	4"	40 73 20	I-03	SOUTH CONTROL BLDG.
PI-011A	BP-011 SUCTION PRESSURE	20 to 80 PSIG	4"	40 73 13	I-03	SOUTH CONTROL BLDG.
PI-011B	BP-011 DISCHARGE PRESSURE	70 to 130 PSIG	4"	40 73 13	I-03	SOUTH CONTROL BLDG.

SECTION 40 61 91 – PROCESS CONTROL SYSTEM INSTRUMENT LIST

SPECIAL WORKS – IG/PC

TAG	SERVICE DESCRIPTION	RANGE / (SETPOINT)	PIPE SIZE	SECTION	P&ID	NOTES
PI-012A	BP-014 SUCTION PRESSURE	20 to 80 PSIG	4"	40 73 13	I-03	SOUTH CONTROL BLDG.
PI-012B	BP-014 DISCHARGE PRESSURE	70-130 PSIG	4"	40 73 13	I-03	SOUTH CONTROL BLDG.
PIT-014	FLUSH SYSTEM DISCHARGE PRESSURE	0 to 130 PSIG	4"	40 73 20	I-03	SOUTH CONTROL BLDG.
FS-014	FLUSH SYSTEM DISCHARGE FLOW	0 to 500 GPM (100GPM)	4"	40 71 79.14	I-03	SOUTH CONTROL BLDG.
ZSC-015A	BG-015 GATE CLOSED POSITION SWITCH	N/A	N/A	40 05 59	I-03	SOUTH CONTROL BLDG. PROVIDED BY GATE MANUFACTURER
ZSO-015A	BG-015 GATE OPEN POSITION SWITCH	N/A	N/A	40 05 59	I-03	SOUTH CONTROL BLDG. PROVIDED BY GATE MANUFACTURER
ZSC-016A	IG-016 GATE CLOSED POSITION SWITCH	N/A	N/A	40 05 59	I-03	SOUTH CONTROL BLDG. PROVIDED BY GATE MANUFACTURER
ZSM-016A	IG-016 GATE MID-POINT POSITION SWITCH	N/A	N/A	40 05 59	I-03	SOUTH CONTROL BLDG. PROVIDED BY GATE MANUFACTURER
ZSO-016A	IG-016 GATE OPEN POSITION SWITCH	N/A	N/A	40 05 59	I-03	SOUTH CONTROL BLDG. PROVIDED BY GATE MANUFACTURER

SECTION 40 61 91 – PROCESS CONTROL SYSTEM INSTRUMENT LIST

SPECIAL WORKS – IG/PC

TAG	SERVICE DESCRIPTION	RANGE / (SETPOINT)	PIPE SIZE	SECTION	P&ID	NOTES
ZSC-016B	IG-016 LOWER DOGGING PIN EXTENDED POSITION SWITCH	N/A	N/A	40 05 59	I-03	SOUTH CONTROL BLDG. PROVIDED BY GATE MANUFACTURER
ZSO-016B	IG-016 LOWER DOGGING PIN RETRACTED POSITION SWITCH	N/A	N/A	40 05 59	I-03	SOUTH CONTROL BLDG. PROVIDED BY GATE MANUFACTURER
ZSC-016C	IG-016 UPPER DOGGING PIN EXTENDED POSITION SWITCH	N/A	N/A	40 05 59	I-03	SOUTH CONTROL BLDG. PROVIDED BY GATE MANUFACTURER
ZSO-016C	IG-016 UPPER DOGGING PIN RETRACTED POSITION SWITCH	N/A	N/A	40 05 59	I-03	SOUTH CONTROL BLDG. PROVIDED BY GATE MANUFACTURER

1. Contractor shall coordinate pipe sizes with mechanical drawings for inline instruments.

NO TEXT ON THIS PAGE

40 61 93 PMCS INPUT/OUTPUT LIST

GENERAL

1.01 Summary

A. This Section describes the I/O point list and requirements for configuring the PMCS databases.

B. The I/O List information is given in Table 40 61 93 at the end of this Section and is available from the Engineer on electronic media. Allow 30 days from request to delivery of the media.

1.02 Payment

A. There is no separate payment provision for this Section.

1.03 Related Sections

A. Section 40 61 13 – PMCS General Requirements.

1.04 References

A. Definitions

I/O – Input/Output

SFT – Start-up and Field Testing.

OAD – Operational Availability Demonstration.

URT – Upset and Recovery Testing.

WFAT - Witnessed Factory Acceptance Tests.

Section 40 61 13 – PMCS General Requirements defines the terms and abbreviations used in this Section and the PMCS.

B. Reference Standards

Section 40 61 13 – PMCS General Requirements lists the standards applicable to this Section and the PMCS.

1.05 Description

A. General

The I/O point list shall be used to configure the I/O interface hardware of all controllers of the PMCS.

The listing includes information on signal functions, signal ranges and range conversions.

As a minimum, the Contractor shall provide all hardware and software to provide the I/O points listed in the accompanying I/O List as indicated in the Contract documents and as required.

The Contractor shall furnish and install as spares, twenty-five (25) percent of each type of I/O of the listed I/O point hardware.

The Contractor shall furnish and install spare hardware and fully configure all spare points into the PMCS databases, displays, trends, alarms and controllers.

All I/O points designated as spares shall be completely prewired to equipment and panel terminal blocks such that only field connections need to be complete when the I/O is activated.

B. I/O List Column Headings

NO or Ref NO or Item NO – is a sequential number starting with a discrete number used to order the entries in the I/O List and permitting the list to sorted and resorted to its original order.

TAG NUMBER – is an alpha numeric character string used to identify the I/O point and laid out as shown on the Contract Documents.

I/O Type is a two letter describing the I/O as follows:

a. AI designates an analog input (4 to 20 mA DC)

b. AO designates an analog output (4 to 20 mA DC)

c. DI designates a discrete input

d. DO designates a momentary, maintained or latched discrete output.

INSTRUMENT TYPE – is an alphanumeric string up 30 positions describing the signal attribute of the point such as:

e. Flow Indicating Transmitter

f. Limit Switch Open

g. Solenoid Valve

SERVICE – is an alphanumeric string up 30 positions describing the equipment where the signal is located.

P&ID NUMBR – is the listing of the P&ID Drawing where the I/O point can be found.

LOCATION – is the listing of the physical location of the instrument or device generating the I/O Point

RANGE – is the range of the of the I/O in engineering units.

REMARKS – can be used for supplementary information or to cross-reference information.

1.06 Quality Assurance

A. The Contractor shall comply with the Quality Assurance requirements listed in Section 40 61 13 – PMCS General Requirements, this Section and the Specifications.

B. The Contractor shall not commence production of database until the configuration of all I/O points has been approved by the Engineer.

C. For each I/O attribute listed in the I/O list which cannot be used exactly as listed, submit an explanation of the reason for the deviation and propose a method to modify the I/O list information.

D. I/O information specific to all controllers shall in addition be submitted with the submittal covering that controller.

E. I/O Lists shall be kept current, updated regularly and shall be available for inspection by the Engineer at the project site.

1.07 Submittals

A. The Contractor shall comply with submittal requirements listed in Section 40 61 13 – PMCS General Requirements, this Section and the Specifications.

B. Contractor shall submit all I/O lists and schedules for the approval of the Engineer.

C. The Contractor is solely responsible for the timing of I/O listing submittal to enable approval by the Engineer.

D. The Contractor shall create, maintain and submit for review, an updated I/O Listing of all device, instruments and I/O points.

E. Submittal shall be made at least 60 days in advance of any proposed use.

1.08 Delivery, Storage, and Handling

A. The Contractor shall comply with delivery, storage and handling requirements listed in Section 40 61 13 – PMCS General Requirements.

1.09 Spare Parts, Special Tools, and Supplies

A. Not Used

1.10 Special Warranty Provisions / Guarantee Periods

A. Not Used

PRODUCTS

1.11 Manufacturers

A. PMCS I/O Lists shall be implemented by the PMCS Supplier.

1.12 Materials / Equipment

A. Not Used

1.13 Fabrication / Assembling / Finishes

A. Not Used

1.14 Source Quality Control / Shop Tests

A. PMCS Factory Test shall conform to the requirements of Section 40 80 81 – PMCS Factory Tests.

B. Section 40 80 81 details how the configuration of I/O specified under this Section shall be verified against approved submittals.

EXECUTION

1.15 Examination / Preparation

A. Not Used

1.16 Application

A. I/O Configuration

Implement the control system database fields in a consistent manner by using the following procedures:

a. Use abbreviations and acronyms already established in the Contract Documents.

b. In particular use the information in the I/O List.

c. Use only abbreviation or acronym for a word or group of words respectively.

d. Use the same subject and word order within data fields.

e. Use the same term (either phrase, word or acronym) to denote the same meaning.

f. Do not use multiple terms for a single meaning.

g. Use the point names, descriptions, logic state descriptions, ranges and units of measurement exactly wherever the point is referenced.

h. Show point names and descriptions for all point references on documentation.

i. Spell correctly.

j. Maintain lists of acronyms and abbreviations used.

B. I/O Hardware Configuration

Partition the I/O among cards within an I/O enclosure to provide control loop integrity.

a. Put all inputs of the same I/O type associated with a device (e.g. pump, blower, clarifier or other piece of equipment) on the same card.

b. Put all inputs of the same I/O type for devices arranged in process trains (e.g. a pump, its inlet valve and its outlet valve, or a pump and its associated macerator) on the same card or cards if more than one card is needed to accommodate the points.

c. Put all outputs of the same I/O type associated with a device or group of devices in a process train on the same card.

d. Where the preceding requirements specified in this subparagraph would cause more than 20 percent spare points on a card, points for a device or process train may be split between two consecutive cards.

e. Make unused terminals resulting from partitioning the I/O into pre-wired spares.

f. Provide pre-wired spare points with all cabling and termination internal to controllers as done for other I/O points.

C. Spares Utilization

If I/O is added by change order, incorporate pre-wired spare points into the active point data base at no increase in Contract price.

a. Include changing point names, descriptions, ranges, or statuses from spare to the new point.

b. Include adding points to group displays and summary displays.

c. Include related documentation changes.

Spares utilization will be subject to the following limitations:

d. The incorporation will not alter the control software configuration except to make the point accessible to displays, reports and future control software configuration.

e. The incorporation will not alter the local area panels or field wiring to the device.

f. Additions will not increase the size of reports or number of displays beyond that specified.

g. The change will not be made subsequent to the controller shop drawing approval for a given process area.

Treat changing of active points to spare points in the same manner as incorporation of spares.

D. Point Data Fields

I/O point data fields will be subject to review and modification by the Engineer during the shop drawing review phase.

Incorporate changes directed by the Engineer completely into the entire system at no increase in Contract price subject to the following limitations:

Limit the total number of modifications to 20 percent of the total number of I/O points.

Each unique change will count as one modification. For example, modifying the description, range, and engineering unit on an analog input count as 3 modifications.

Analog input alarm limit definition will not be counted as a modification.

1.17 Field Testing / Quality Control

A. PMCS Field Testing shall conform to the requirements of Section 40 80 82 – PMCS Startup and Field Testing.

B. Section 40 80 82 details how the configuration of I/O specified under this Section shall be verified during Field Testing.

C. Not Used

1.18 Startup / Demonstration

A. Section 40 80 82 – PMCS Startup and Field Testing details the requirements for OAD and PMCS Upset and Recovery Testing.

B. The OAD and the PMCS Upset and Recovery Testing shall serve as the final verification of the configuration of all PMCS I/O.

C. Not Used

1.19 Adjusting / Protection / Cleanup

A. Not Used

TABLE – INPUT/OUTPUT LIST

SECTION 40 61 93 – PMCS INPUT/OUTPUT LIST

SPECIAL WORKS – IG/PC

TAG	SERVICE DESCRIPTION	FUNCTION	PLC	I/O TYPE	P&ID	NOTES
FS-004	FLUSH ACTIVE / FLOW OK	FLOW	NORTH TP	DI	I-03	NORTH CONTROL BUILDING - FS-LCP
YN-004	FLUSH CYCLE DELAY TIMER ACTIVE (ON)	TIMER	NORTH TP	DI	I-03	NORTH CONTROL BUILDING - SCP
HS-005B	BG-005 (BYPASS GATE) & IG-006 (INTERCEPTOR GATE) ALARM RESET COMMAND	ALARM RESET	NORTH TP	DO	I-03	NORTH CONTROL BUILDING - SCP
HS-005A	BG-005 (BYPASS GATE) OPEN COMMAND	OPEN	NORTH TP	DO	I-03	NORTH CONTROL BUILDING - SCP
HS-005AA	BG-005 (BYPASS GATE) CLOSE COMMAND	CLOSE	NORTH TP	DO	I-03	NORTH CONTROL BUILDING - SCP
YN-005	BG-005 (BYPASS GATE) IN REMOTE (SCP)	SCP IN REMOTE	NORTH TP	DI	I-03	NORTH CONTROL BUILDING - SCP
YN-005AC	BG-005 (BYPASS GATE) IN LOCAL (SCP)	SCP IN LOCAL	NORTH TP	DI	I-03	NORTH CONTROL BUILDING - SCP
YN-005AD	BG-005 (BYPASS GATE) IN PLC (SCP)	SCP IN PLC MODE	NORTH TP	DI	I-03	NORTH CONTROL BUILDING - SCP
YN-005AE	BG-005 (BYPASS GATE) IN REMOTE (NGCP)	NGCP IN REMOTE	NORTH TP	DO	I-03	NORTH CONTROL BUILDING - SCP
YN-005AF	BG-005 (BYPASS GATE) IN LOCAL (NGCP)	NGCP IN LOCAL	NORTH TP	DO	I-03	NORTH CONTROL BUILDING - SCP
YN-005A	BG-005 (BYPASS GATE) OPEN INDICATION	OPENED	NORTH TP	DI	I-03	NORTH CONTROL BUILDING - SCP
YN-005AA	BG-005 (BYPASS GATE) CLOSED INDICATION	CLOSED	NORTH TP	DI	I-03	NORTH CONTROL BUILDING - SCP

SECTION 40 61 93 – PMCS INPUT/OUTPUT LIST

SPECIAL WORKS – IG/PC

TAG	SERVICE DESCRIPTION	FUNCTION	PLC	I/O TYPE	P&ID	NOTES
YN-005AB	BG-005 (BYPASS GATE) IN TRANSIT	IN TRANSIT	NORTH TP	DI	I-03	NORTH CONTROL BUILDING - SCP
YA-005	BG-005 (BYPASS GATE) FAULT INDICATION	FAULT	NORTH TP	DI	I-03	NORTH CONTROL BUILDING - SCP
HS-006A	IG-006 (INTERCEPTOR GATE) OPEN COMMAND	OPEN	NORTH TP	DO	I-03	NORTH CONTROL BUILDING - SCP
HS-006AA	IG-006 (INTERCEPTOR GATE) CLOSE COMMAND	CLOSE	NORTH TP	DO	I-03	NORTH CONTROL BUILDING - SCP
HS-006B	IG-006 (INTERCEPTOR GATE) LOWER DOGGING PIN EXTEND COMMAND	LOWER PIN EXTEND	NORTH TP	DO	I-03	NORTH CONTROL BUILDING - SCP
HS-006BB	IG-006 (INTERCEPTOR GATE) LOWER DOGGING PIN RETRACT COMMAND	LOWER PIN RETRACT	NORTH TP	DO	I-03	NORTH CONTROL BUILDING - SCP
HS-006C	IG-006 (INTERCEPTOR GATE) UPPER DOGGING PIN EXTEND COMMAND	UPPER PIN EXTEND	NORTH TP	DO	I-03	NORTH CONTROL BUILDING - SCP
HS-006CC	IG-006 (INTERCEPTOR GATE) UPPER DOGGING PIN RETRACT COMMAND	UPPER PIN RETRACT	NORTH TP	DO	I-03	NORTH CONTROL BUILDING - SCP
YN-006	IG-006 (INTERCEPTOR GATE) IN REMOTE (SCP)	SCP IN REMOTE	NORTH TP	DI	I-03	NORTH CONTROL BUILDING - SCP
YN-006AD	IG-006 (INTERCEPTOR GATE) IN LOCAL (SCP)	SCP IN LOCAL	NORTH TP	DI	I-03	NORTH CONTROL BUILDING - SCP
YN-006AE	IG-006 (INTERCEPTOR GATE) IN PLC (SCP)	SCP IN PLC MODE	NORTH TP	DI	I-03	NORTH CONTROL BUILDING - SCP
YN-006AF	IG-006 (INTERCEPTOR GATE) IN REMOTE (NGCP)	NGCP IN REMOTE	NORTH TP	DO	I-03	NORTH CONTROL BUILDING - SCP

SECTION 40 61 93 – PMCS INPUT/OUTPUT LIST

SPECIAL WORKS – IG/PC

TAG	SERVICE DESCRIPTION	FUNCTION	PLC	I/O TYPE	P&ID	NOTES
YN-006AG	IG-006 (INTERCEPTOR GATE) IN LOCAL (NGCP)	NGCP IN LOCAL	NORTH TP	DO	I-03	NORTH CONTROL BUILDING - SCP
YN-006A	IG-006 (INTERCEPTOR GATE) OPEN INDICATION	OPENED	NORTH TP	DI	I-03	NORTH CONTROL BUILDING - SCP
YN-006AA	IG-006 (INTERCEPTOR GATE) CLOSED INDICATION	CLOSED	NORTH TP	DI	I-03	NORTH CONTROL BUILDING - SCP
YN-006AB	IG-006 (INTERCEPTOR GATE) IN TRANSIT	IN TRANSIT	NORTH TP	DI	I-03	NORTH CONTROL BUILDING - SCP
YN-006AC	IG-006 (INTERCEPTOR GATE) MID POSITION INDICATION	MID POSITION	NORTH TP	DI	I-03	NORTH CONTROL BUILDING - SCP
YA-006	IG-006 (INTERCEPTOR GATE) FAULT INDICATION	FAULT	NORTH TP	DI	I-03	NORTH CONTROL BUILDING - SCP
YA-006A	IG-006 (INTERCEPTOR GATE) FAIL TO OPEN FAULT INDICATION	FAIL TO OPEN	NORTH TP	DI	I-03	NORTH CONTROL BUILDING - SCP
YA-006AA	IG-006 (INTERCEPTOR GATE) FAIL TO REACH MID POSITION FAULT INDICATION	FAIL TO REACH MID POSITION	NORTH TP	DI	I-03	NORTH CONTROL BUILDING - SCP
YA-006AB	IG-006 (INTERCEPTOR GATE) FAIL TO CLOSE FAULT INDICATION	FAIL TO CLOSE	NORTH TP	DI	I-03	NORTH CONTROL BUILDING - SCP
YN-006B	IG-006 (INTERCEPTOR GATE) LOWER DOGGING PIN EXTENDED	LOWER PIN EXTENDED	NORTH TP	DI	I-03	NORTH CONTROL BUILDING - SCP
YN-006BB	IG-006 (INTERCEPTOR GATE) LOWER DOGGING PIN RETRACTED	LOWER PIN RETRACTED	NORTH TP	DI	I-03	NORTH CONTROL BUILDING - SCP
YN-006C	IG-006 (INTERCEPTOR GATE) UPPER DOGGING PIN EXTENDED	UPPER PIN EXTENDED	NORTH TP	DI	I-03	NORTH CONTROL BUILDING - SCP

SECTION 40 61 93 – PMCS INPUT/OUTPUT LIST

SPECIAL WORKS – IG/PC

TAG	SERVICE DESCRIPTION	FUNCTION	PLC	I/O TYPE	P&ID	NOTES
YN-006CC	IG-006 (INTERCEPTOR GATE) UPPER DOGGING PIN RETRACTED	UPPER PIN RETRACTED	NORTH TP	DI	I-03	NORTH CONTROL BUILDING - SCP
YA-007	SCP ON UPS POWER	UPS POWER ON	NORTH TP	DI	I-03	NORTH CONTROL BUILDING - SCP
YA-007	SCP UPS FAULT	UPS FAULT	NORTH TP	DI	I-03	NORTH CONTROL BUILDING - SCP
YA-008	NORTH-TP ON UPS POWER	UPS POWER ON	NORTH TP	DI	I-03	NORTH CONTROL BUILDING - NORTH TP
YA-008A	NORTH-TP UPS FAULT	UPS FAULT	NORTH TP	DI	I-03	NORTH CONTROL BUILDING - NORTH TP
FS-014	FLUSH ACTIVE / FLOW OK	FLOW	SOUTH TP	DI	I-03	SOUTH CONTROL BUILDING - FS-LCP
YN-014	FLUSH CYCLE DELAY TIMER ACTIVE (ON)	TIMER	SOUTH TP	DI	I-03	SOUTH CONTROL BUILDING - SCP
HS-015B	BG-015 (BYPASS GATE) & IG-016 (INTERCEPTOR GATE) ALARM RESET COMMAND	ALARM RESET	SOUTH TP	DO	I-03	SOUTH CONTROL BUILDING - SCP
HS-015A	BG-015 (BYPASS GATE) OPEN COMMAND	OPEN	SOUTH TP	DO	I-03	SOUTH CONTROL BUILDING - SCP
HS-015AA	BG-015 (BYPASS GATE) CLOSE COMMAND	CLOSE	SOUTH TP	DO	I-03	SOUTH CONTROL BUILDING - SCP

SECTION 40 61 93 – PMCS INPUT/OUTPUT LIST

SPECIAL WORKS – IG/PC

TAG	SERVICE DESCRIPTION	FUNCTION	PLC	I/O TYPE	P&ID	NOTES
YN-015	BG-015 (BYPASS GATE) IN REMOTE (SCP)	READY / IN REMOTE	SOUTH TP	DI	I-03	SOUTH CONTROL BUILDING - SCP
YN-015AC	BG-015 (BYPASS GATE) IN LOCAL (SCP)	SCP IN LOCAL	SOUTH TP	DI	I-03	SOUTH CONTROL BUILDING - SCP
YN-015AD	BG-015 (BYPASS GATE) IN PLC (SCP)	SCP IN PLC MODE	SOUTH TP	DI	I-03	SOUTH CONTROL BUILDING - SCP
YN-015AE	BG-015 (BYPASS GATE) IN REMOTE (SGCP)	SGCP IN REMOTE	SOUTH TP	DO	I-03	SOUTH CONTROL BUILDING - SCP
YN-015AF	BG-015 (BYPASS GATE) IN LOCAL (SGCP)	SGCP IN LOCAL	SOUTH TP	DO	I-03	SOUTH CONTROL BUILDING - SCP
YN-015A	BG-015 (BYPASS GATE) OPEN INDICATION	OPENED	SOUTH TP	DI	I-03	SOUTH CONTROL BUILDING - SCP
YN-015AA	BG-015 (BYPASS GATE) CLOSED INDICATION	CLOSED	SOUTH TP	DI	I-03	SOUTH CONTROL BUILDING - SCP
YN-015AB	BG-015 (BYPASS GATE) IN TRANSIT	IN TRANSIT	SOUTH TP	DI	I-03	SOUTH CONTROL BUILDING - SCP
YA-015	BG-015 (BYPASS GATE) FAULT INDICATION	FAULT	SOUTH TP	DI	I-03	SOUTH CONTROL BUILDING - SCP
HS-016A	IG-016 (INTERCEPTOR GATE) OPEN COMMAND	OPEN	SOUTH TP	DO	I-03	SOUTH CONTROL BUILDING - SCP
HS-016AA	IG-016 (INTERCEPTOR GATE) CLOSE COMMAND	CLOSE	SOUTH TP	DO	I-03	SOUTH CONTROL BUILDING - SCP
HS-016B	IG-016 (INTERCEPTOR GATE) LOWER DOGGING PIN EXTEND COMMAND	LOWER PIN EXTEND	SOUTH TP	DO	I-03	SOUTH CONTROL BUILDING - SCP

SECTION 40 61 93 – PMCS INPUT/OUTPUT LIST

SPECIAL WORKS – IG/PC

TAG	SERVICE DESCRIPTION	FUNCTION	PLC	I/O TYPE	P&ID	NOTES
HS-016C	IG-016 (INTERCEPTOR GATE) LOWER DOGGING PIN RETRACT COMMAND	LOWER PIN RETRACT	SOUTH TP	DO	I-03	SOUTH CONTROL BUILDING - SCP
HS-016C	IG-016 (INTERCEPTOR GATE) UPPER DOGGING PIN EXTEND COMMAND	UPPER PIN EXTEND	SOUTH TP	DO	I-03	NORTH CONTROL BUILDING - SCP
HS-016CC	IG-016 (INTERCEPTOR GATE) UPPERR DOGGING PIN RETRACT COMMAND	UPPER PIN RETRACT	SOUTH TP	DO	I-03	NORTH CONTROL BUILDING - SCP
YN-016	IG-016 (INTERCEPTOR GATE) N REMOTE	SCP IN REMOTE	SOUTH TP	DI	I-03	SOUTH CONTROL BUILDING - SCP
YN-016AD	IG-016 (INTERCEPTOR GATE) IN LOCAL (SCP)	SCP IN LOCAL	SOUTH TP	DI	I-03	SOUTH CONTROL BUILDING - SCP
YN-016AE	IG-016 (INTERCEPTOR GATE) IN PLC (SCP)	SCP IN PLC MODE	SOUTH TP	DI	I-03	SOUTH CONTROL BUILDING - SCP
YN-016AF	IG-016 (INTERCEPTOR GATE) IN REMOTE (SGCP)	SGCP IN REMOTE	SOUTH TP	DO	I-03	SOUTH CONTROL BUILDING - SCP
YN-016AG	IG-016 (INTERCEPTOR GATE) IN LOCAL (SGCP)	SGCP IN LOCAL	SOUTH TP	DO	I-03	SOUTH CONTROL BUILDING - SCP
YN-016A	IG-016 (INTERCEPTOR GATE) OPEN INDICATION	OPENED	SOUTH TP	DI	I-03	SOUTH CONTROL BUILDING - SCP
YN-016AA	IG-016 (INTERCEPTOR GATE) CLOSED INDICATION	CLOSED	SOUTH TP	DI	I-03	SOUTH CONTROL BUILDING - SCP
YN-016AB	IG-016 (INTERCEPTOR GATE) IN TRANSIT	IN TRANSIT	SOUTH TP	DI	I-03	SOUTH CONTROL BUILDING - SCP
YN-016AC	IG-016 (INTERCEPTOR GATE) MID POSITION INDICATION	MID POSITION	SOUTH TP	DI	I-03	SOUTH CONTROL BUILDING - SCP

SECTION 40 61 93 – PMCS INPUT/OUTPUT LIST

SPECIAL WORKS – IG/PC

TAG	SERVICE DESCRIPTION	FUNCTION	PLC	I/O TYPE	P&ID	NOTES
YA-016	IG-016 (INTERCEPTOR GATE) FAULT INDICATION	FAULT	SOUTH TP	DI	I-03	SOUTH CONTROL BUILDING - SCP
YA-016A	IG-016 (INTERCEPTOR GATE) FAIL TO OPEN FAULT INDICATION	FAIL TO OPEN	SOUTH TP	DI	I-03	SOUTH CONTROL BUILDING - SCP
YA-016AA	IG-016 (INTERCEPTOR GATE) FAIL TO REACH MID POSITION FAULT INDICATION	FAIL TO REACH MID POSITION	SOUTH TP	DI	I-03	SOUTH CONTROL BUILDING - SCP
YA-016AB	IG-016 (INTERCEPTOR GATE) FAIL TO CLOSE FAULT INDICATION	FAIL TO CLOSE	SOUTH TP	DI	I-03	SOUTH CONTROL BUILDING - SCP
YN-016B	IG-016 (INTERCEPTOR GATE) LOWER DOGGING PIN EXTENDED	LOWER PIN EXTENDED	SOUTH TP	DI	I-03	SOUTH CONTROL BUILDING - SCP
YN-016BB	IG-016 (INTERCEPTOR GATE) LOWER DOGGING PIN RETRACTED	LOWER PIN RETRACTED	SOUTH TP	DI	I-03	SOUTH CONTROL BUILDING - SCP
YN-016C	IG-016 (INTERCEPTOR GATE) UPPER DOGGING PIN EXTENDED	UPPER PIN EXTENDED	SOUTH TP	DI	I-03	SOUTH CONTROL BUILDING - SCP
YN-016CC	IG-016 (INTERCEPTOR GATE) UPPER DOGGING PIN RETRACTED	UPPER PIN RETRACTED	SOUTH TP	DI	I-03	SOUTH CONTROL BUILDING - SCP
YA-017	SCP ON UPS POWER	UPS POWER ON	SOUTH TP	DI	I-03	SOUTH CONTROL BUILDING - SCP
YA-017	SCP UPS FAULT	UPS FAULT	SOUTH TP	DI	I-03	SOUTH CONTROL BUILDING - SCP
YA-018	SOUTH-TP ON UPS POWER	UPS POWER ON	SOUTH TP	DI	I-03	SOUTH CONTROL BUILDING - SOUTH TP

SECTION 40 61 93 – PMCS INPUT/OUTPUT LIST

SPECIAL WORKS – IG/PC

TAG	SERVICE DESCRIPTION	FUNCTION	PLC	I/O TYPE	P&ID	NOTES
YA-018A	SOUTH-TP UPS FAULT	UPS FAULT	SOUTH TP	DI	I-03	SOUTH CONTROL BUILDING - SOUTH TP
FS-004	FLUSH ACTIVE / FLOW OK	FLOW	existing MPS TP	DO	I-03	MANHATTAN PUMP STATION - NGCP
YN-004	FLUSH CYCLE DELAY TIMER ACTIVE (ON)	TIMER	existing MPS TP	DO	I-03	MANHATTAN PUMP STATION - NGCP
HS-005B	BG-005 (BYPASS GATE) & IG-006 (INTERCEPTOR GATE) ALARM RESET COMMAND	ALARM RESET	existing MPS TP	DI	I-03	MANHATTAN PUMP STATION - NGCP
HS-005A	BG-005 (BYPASS GATE) OPEN COMMAND	OPEN	existing MPS TP	DI	I-03	MANHATTAN PUMP STATION - NGCP
HS-005AA	BG-005 (BYPASS GATE) CLOSE COMMAND	CLOSE	existing MPS TP	DI	I-03	MANHATTAN PUMP STATION - NGCP
YN-005	BG-005 (BYPASS GATE) IN REMOTE (SCP)	SCP IN REMOTE	existing MPS TP	DO	I-03	MANHATTAN PUMP STATION - NGCP
YN-005AC	BG-005 (BYPASS GATE) IN LOCAL (SCP)	SCP IN LOCAL	existing MPS TP	DO	I-03	MANHATTAN PUMP STATION - NGCP
YN-005AD	BG-005 (BYPASS GATE) IN PLC (SCP)	SCP IN PLC MODE	existing MPS TP	DO	I-03	MANHATTAN PUMP STATION - NGCP
YN-005AE	BG-005 (BYPASS GATE) IN REMOTE (NGCP)	NGCP IN REMOTE	existing MPS TP	DI	I-03	MANHATTAN PUMP STATION - NGCP
YN-005AF	BG-005 (BYPASS GATE) IN LOCAL (NGCP)	NGCP IN LOCAL	existing MPS TP	DI	I-03	MANHATTAN PUMP STATION - NGCP

SECTION 40 61 93 – PMCS INPUT/OUTPUT LIST

SPECIAL WORKS – IG/PC

TAG	SERVICE DESCRIPTION	FUNCTION	PLC	I/O TYPE	P&ID	NOTES
YN-005A	BG-005 (BYPASS GATE) OPEN INDICATION	OPENED	existing MPS TP	DO	I-03	MANHATTAN PUMP STATION - NGCP
YN-005AA	BG-005 (BYPASS GATE) CLOSED INDICATION	CLOSED	existing MPS TP	DO	I-03	MANHATTAN PUMP STATION - NGCP
YN-005AB	BG-005 (BYPASS GATE) IN TRANSIT	IN TRANSIT	existing MPS TP	DO	I-03	MANHATTAN PUMP STATION - NGCP
YA-005	BG-005 (BYPASS GATE) FAULT INDICATION	FAULT	existing MPS TP	DO	I-03	MANHATTAN PUMP STATION - NGCP
HS-006A	IG-006 (INTERCEPTOR GATE) OPEN COMMAND	OPEN	existing MPS TP	DI	I-03	MANHATTAN PUMP STATION - NGCP
HS-006AA	IG-006 (INTERCEPTOR GATE) CLOSE COMMAND	CLOSE	existing MPS TP	DI	I-03	MANHATTAN PUMP STATION - NGCP
HS-006B	IG-006 (INTERCEPTOR GATE) LOWER DOGGING PIN EXTEND COMMAND	LOWER PIN EXTEND	existing MPS TP	DI	I-03	MANHATTAN PUMP STATION - NGCP
HS-006BB	IG-006 (INTERCEPTOR GATE) LOWER DOGGING PIN RETRACT COMMAND	LOWER PIN RETRACT	existing MPS TP	DI	I-03	MANHATTAN PUMP STATION - NGCP
HS-006C	IG-006 (INTERCEPTOR GATE) UPPER DOGGING PIN EXTEND COMMAND	UPPER PIN EXTEND	existing MPS TP	DI	I-03	MANHATTAN PUMP STATION - NGCP
HS-006CC	IG-006 (INTERCEPTOR GATE) UPPER DOGGING PIN RETRACT COMMAND	UPPER PIN RETRACT	existing MPS TP	DI	I-03	MANHATTAN PUMP STATION - NGCP
YN-006	IG-006 (INTERCEPTOR GATE) IN REMOTE (SCP)	SCP IN REMOTE	existing MPS TP	DO	I-03	MANHATTAN PUMP STATION - NGCP
YN-006AD	IG-006 (INTERCEPTOR GATE) IN LOCAL (SCP)	SCP IN LOCAL	existing MPS TP	DO	I-03	MANHATTAN PUMP STATION - NGCP

SECTION 40 61 93 – PMCS INPUT/OUTPUT LIST

SPECIAL WORKS – IG/PC

TAG	SERVICE DESCRIPTION	FUNCTION	PLC	I/O TYPE	P&ID	NOTES
YN-006AE	IG-006 (INTERCEPTOR GATE) IN PLC (SCP)	SCP IN PLC MODE	existing MPS TP	DO	I-03	MANHATTAN PUMP STATION - NGCP
YN-006AF	IG-006 (INTERCEPTOR GATE) IN REMOTE (NGCP)	NGCP IN REMOTE	existing MPS TP	DI	I-03	MANHATTAN PUMP STATION - NGCP
YN-006AG	IG-006 (INTERCEPTOR GATE) IN LOCAL (NGCP)	NGCP IN LOCAL	existing MPS TP	DI	I-03	MANHATTAN PUMP STATION - NGCP
YN-006A	IG-006 (INTERCEPTOR GATE) OPEN INDICATION	OPENED	existing MPS TP	DO	I-03	MANHATTAN PUMP STATION - NGCP
YN-006AA	IG-006 (INTERCEPTOR GATE) CLOSED INDICATION	CLOSED	existing MPS TP	DO	I-03	MANHATTAN PUMP STATION - NGCP
YN-006AB	IG-006 (INTERCEPTOR GATE) IN TRANSIT	IN TRANSIT	existing MPS TP	DO	I-03	MANHATTAN PUMP STATION - NGCP
YN-006AC	IG-006 (INTERCEPTOR GATE) MID POSITION INDICATION	MID POSITION	existing MPS TP	DO	I-03	MANHATTAN PUMP STATION - NGCP
YA-006	IG-006 (INTERCEPTOR GATE) FAULT INDICATION	FAULT	existing MPS TP	DO	I-03	MANHATTAN PUMP STATION - NGCP
YA-006A	IG-006 (INTERCEPTOR GATE) FAIL TO OPEN FAULT INDICATION	FAIL TO OPEN	existing MPS TP	DO	I-03	MANHATTAN PUMP STATION - NGCP
YA-006AA	IG-006 (INTERCEPTOR GATE) FAIL TO REACH MID POSITION FAULT INDICATION	FAIL TO REACH MID POSITION	existing MPS TP	DO	I-03	MANHATTAN PUMP STATION - NGCP
YA-006AB	IG-006 (INTERCEPTOR GATE) FAIL TO CLOSE FAULT INDICATION	FAIL TO CLOSE	existing MPS TP	DO	I-03	MANHATTAN PUMP STATION - NGCP
YN-006B	IG-006 (INTERCEPTOR GATE) LOWER DOGGING PIN EXTENDED	LOWER PIN EXTENDED	existing MPS TP	DO	I-03	MANHATTAN PUMP STATION - NGCP

SECTION 40 61 93 – PMCS INPUT/OUTPUT LIST

SPECIAL WORKS – IG/PC

TAG	SERVICE DESCRIPTION	FUNCTION	PLC	I/O TYPE	P&ID	NOTES
YN-006BB	IG-006 (INTERCEPTOR GATE) LOWER DOGGING PIN RETRACTED	LOWER PIN RETRACTED	existing MPS TP	DO	I-03	MANHATTAN PUMP STATION - NGCP
YN-006C	IG-006 (INTERCEPTOR GATE) UPPER DOGGING PIN EXTENDED	UPPER PIN EXTENDED	existing MPS TP	DO	I-03	MANHATTAN PUMP STATION - NGCP
YN-006CC	IG-006 (INTERCEPTOR GATE) UPPER DOGGING PIN RETRACTED	UPPER PIN RETRACTED	existing MPS TP	DO	I-03	MANHATTAN PUMP STATION - NGCP
YA-007	SCP ON UPS POWER	UPS POWER ON	existing MPS TP	DO	I-03	MANHATTAN PUMP STATION - NGCP
YA-007	SCP UPS FAULT	UPS FAULT	existing MPS TP	DO	I-03	MANHATTAN PUMP STATION - NGCP
YA-008	NORTH-TP ON UPS POWER	UPS POWER ON	existing MPS TP	DO	I-03	MANHATTAN PUMP STATION - NGCP
YA-008A	NORTH-TP UPS FAULT	UPS FAULT	existing MPS TP	DO	I-03	MANHATTAN PUMP STATION - NGCP
FS-014	FLUSH ACTIVE / FLOW OK	FLOW	existing MPS TP	DO	I-03	MANHATTAN PUMP STATION - SGCP
YN-014	FLUSH CYCLE DELAY TIMER ACTIVE (ON)	TIMER	existing MPS TP	DO	I-03	MANHATTAN PUMP STATION - SGCP
HS-015B	BG-015 (BYPASS GATE) & IG-016 (INTERCEPTOR GATE) ALARM RESET COMMAND	ALARM RESET	existing MPS TP	DI	I-03	MANHATTAN PUMP STATION - SGCP
HS-015A	BG-015 (BYPASS GATE) OPEN COMMAND	OPEN	existing MPS TP	DI	I-03	MANHATTAN PUMP STATION - SGCP

SECTION 40 61 93 – PMCS INPUT/OUTPUT LIST

SPECIAL WORKS – IG/PC

TAG	SERVICE DESCRIPTION	FUNCTION	PLC	I/O TYPE	P&ID	NOTES
HS-015AA	BG-015 (BYPASS GATE) CLOSE COMMAND	CLOSE	existing MPS TP	DI	I-03	MANHATTAN PUMP STATION - SGCP
YN-015	BG-015 (BYPASS GATE) IN REMOTE (SCP)	READY / IN REMOTE	existing MPS TP	DO	I-03	MANHATTAN PUMP STATION - SGCP
YN-015AC	BG-015 (BYPASS GATE) IN LOCAL (SCP)	SCP IN LOCAL	existing MPS TP	DO	I-03	MANHATTAN PUMP STATION - SGCP
YN-015AD	BG-015 (BYPASS GATE) IN PLC (SCP)	SCP IN PLC MODE	existing MPS TP	DO	I-03	MANHATTAN PUMP STATION - SGCP
YN-015AE	BG-015 (BYPASS GATE) IN REMOTE (SGCP)	SGCP IN REMOTE	existing MPS TP	DI	I-03	MANHATTAN PUMP STATION - SGCP
YN-015AF	BG-015 (BYPASS GATE) IN LOCAL (SGCP)	SGCP IN LOCAL	existing MPS TP	DI	I-03	MANHATTAN PUMP STATION - SGCP
YN-015A	BG-015 (BYPASS GATE) OPEN INDICATION	OPENED	existing MPS TP	DO	I-03	MANHATTAN PUMP STATION - SGCP
YN-015AA	BG-015 (BYPASS GATE) CLOSED INDICATION	CLOSED	existing MPS TP	DO	I-03	MANHATTAN PUMP STATION - SGCP
YN-015AB	BG-015 (BYPASS GATE) IN TRANSIT	IN TRANSIT	existing MPS TP	DO	I-03	MANHATTAN PUMP STATION - SGCP
YA-015	BG-015 (BYPASS GATE) FAULT INDICATION	FAULT	existing MPS TP	DO	I-03	MANHATTAN PUMP STATION - SGCP
HS-016A	IG-016 (INTERCEPTOR GATE) OPEN COMMAND	OPEN	existing MPS TP	DI	I-03	MANHATTAN PUMP STATION - SGCP
HS-016AA	IG-016 (INTERCEPTOR GATE) CLOSE COMMAND	CLOSE	existing MPS TP	DI	I-03	MANHATTAN PUMP STATION - SGCP

SECTION 40 61 93 – PMCS INPUT/OUTPUT LIST

SPECIAL WORKS – IG/PC

TAG	SERVICE DESCRIPTION	FUNCTION	PLC	I/O TYPE	P&ID	NOTES
HS-016B	IG-016 (INTERCEPTOR GATE) LOWER DOGGING PIN EXTEND COMMAND	LOWER PIN EXTEND	existing MPS TP	DI	I-03	MANHATTAN PUMP STATION - SGCP
HS-016C	IG-016 (INTERCEPTOR GATE) LOWER DOGGING PIN RETRACT COMMAND	LOWER PIN RETRACT	existing MPS TP	DI	I-03	MANHATTAN PUMP STATION - SGCP
HS-016C	IG-016 (INTERCEPTOR GATE) UPPER DOGGING PIN EXTEND COMMAND	UPPER PIN EXTEND	existing MPS TP	DI	I-03	MANHATTAN PUMP STATION - SGCP
HS-016CC	IG-016 (INTERCEPTOR GATE) UPPER DOGGING PIN RETRACT COMMAND	UPPER PIN RETRACT	existing MPS TP	DI	I-03	MANHATTAN PUMP STATION - SGCP
YN-016	IG-016 (INTERCEPTOR GATE) N REMOTE	SCP IN REMOTE	existing MPS TP	DO	I-03	MANHATTAN PUMP STATION - SGCP
YN-016AD	IG-016 (INTERCEPTOR GATE) IN LOCAL (SCP)	SCP IN LOCAL	existing MPS TP	DO	I-03	MANHATTAN PUMP STATION - SGCP
YN-016AE	IG-016 (INTERCEPTOR GATE) IN PLC (SCP)	SCP IN PLC MODE	existing MPS TP	DO	I-03	MANHATTAN PUMP STATION - SGCP
YN-016AF	IG-016 (INTERCEPTOR GATE) IN REMOTE (SGCP)	SGCP IN REMOTE	existing MPS TP	DI	I-03	MANHATTAN PUMP STATION - SGCP
YN-016AG	IG-016 (INTERCEPTOR GATE) IN LOCAL (SGCP)	SGCP IN LOCAL	existing MPS TP	DI	I-03	MANHATTAN PUMP STATION - SGCP
YN-016A	IG-016 (INTERCEPTOR GATE) OPEN INDICATION	OPENED	existing MPS TP	DO	I-03	MANHATTAN PUMP STATION - SGCP
YN-016AA	IG-016 (INTERCEPTOR GATE) CLOSED INDICATION	CLOSED	existing MPS TP	DO	I-03	MANHATTAN PUMP STATION - SGCP
YN-016AB	IG-016 (INTERCEPTOR GATE) IN TRANSIT	IN TRANSIT	existing MPS TP	DO	I-03	MANHATTAN PUMP STATION - SGCP

SECTION 40 61 93 – PMCS INPUT/OUTPUT LIST

SPECIAL WORKS – IG/PC

TAG	SERVICE DESCRIPTION	FUNCTION	PLC	I/O TYPE	P&ID	NOTES
YN-016AC	IG-016 (INTERCEPTOR GATE) MID POSITION INDICATION	MID POSITION	existing MPS TP	DO	I-03	MANHATTAN PUMP STATION - SGCP
YA-016	IG-016 (INTERCEPTOR GATE) FAULT INDICATION	FAULT	existing MPS TP	DO	I-03	MANHATTAN PUMP STATION - SGCP
YA-016A	IG-016 (INTERCEPTOR GATE) FAIL TO OPEN FAULT INDICATION	FAIL TO OPEN	existing MPS TP	DO	I-03	MANHATTAN PUMP STATION - SGCP
YA-016AA	IG-016 (INTERCEPTOR GATE) FAIL TO REACH MID POSITION FAULT INDICATION	FAIL TO REACH MID POSITION	existing MPS TP	DO	I-03	MANHATTAN PUMP STATION - SGCP
YA-016AB	IG-016 (INTERCEPTOR GATE) FAIL TO CLOSE FAULT INDICATION	FAIL TO CLOSE	existing MPS TP	DO	I-03	MANHATTAN PUMP STATION - SGCP
YN-016B	IG-016 (INTERCEPTOR GATE) LOWER DOGGING PIN EXTENDED	LOWER PIN EXTENDED	existing MPS TP	DO	I-03	MANHATTAN PUMP STATION - SGCP
YN-016BB	IG-016 (INTERCEPTOR GATE) LOWER DOGGING PIN RETRACTED	LOWER PIN RETRACTED	existing MPS TP	DO	I-03	MANHATTAN PUMP STATION - SGCP
YN-016C	IG-016 (INTERCEPTOR GATE) UPPER DOGGING PIN EXTENDED	UPPER PIN EXTENDED	existing MPS TP	DO	I-03	MANHATTAN PUMP STATION - SGCP
YN-016CC	IG-016 (INTERCEPTOR GATE) UPPER DOGGING PIN RETRACTED	UPPER PIN RETRACTED	existing MPS TP	DO	I-03	MANHATTAN PUMP STATION - SGCP
YA-017	SCP ON UPS POWER	UPS POWER ON	existing MPS TP	DO	I-03	MANHATTAN PUMP STATION - SGCP
YA-017	SCP UPS FAULT	UPS FAULT	existing MPS TP	DO	I-03	MANHATTAN PUMP STATION - SGCP
YA-018	SOUTH-TP ON UPS POWER	UPS POWER ON	existing MPS TP	DO	I-03	MANHATTAN PUMP STATION - SGCP

SECTION 40 61 93 – PMCS INPUT/OUTPUT LIST

SPECIAL WORKS – IG/PC

TAG	SERVICE DESCRIPTION	FUNCTION	PLC	I/O TYPE	P&ID	NOTES
YA-018A	SOUTH-TP UPS FAULT	UPS FAULT	existing MPS TP	DO	I-03	MANHATTAN PUMP STATION - SGCP

END OF SECTION

NO TEXT ON THIS PAGE

SECTION 40 61 96 – PMCS CONTROL STRATEGIES

SPECIAL WORKS – IG/PC

---

40 61 96 PMCS CONTROL STRATEGIES

GENERAL

1.01 Summary

A. The Contractor shall furnish Control Strategy diagrams, configuration sheets and Control Strategy descriptions as shop drawings for approval.

B. The Contractor shall perform all programming, configuration and tuning required to implement each Control Strategy listed in this Section.

1.02 Payment

A. There is no separate payment provision for this Section.

1.03 Related Sections

A. Section 26 05 53 – Identification for Electrical Systems.

B. Section 26 29 13 – Enclosed Controllers.

C. Section 40 78 56 – Isolators, Intrinsically Safe Barriers, and Surge Suppressors

D. Section 40 61 13 – PMCS General Requirements.

1.04 References

A. Definitions

CS - Control Strategy

Section 40 61 13 – PMCS General Requirements defines the terms and abbreviations used in this Section and the PMCS

B. Reference Standards

Section 40 61 13 – PMCS General Requirements lists the standards applicable to this Section and the PMCS.

1.05 Description

A. The Control Strategies in this Section are written descriptions of the basic configuration and/or programming required to implement regulatory and sequential control of the unit processes as shown on the P&IDs.

B. The Control Strategies do not in all cases describe the process characteristics fully, many of which may only become apparent during shop drawing assembly or during start-up.

C. Control Strategies shall be implemented by relay logic and not PLCs.

D. The process inputs/outputs referred to in the Control Strategies are all shown on the P&IDs.

E. Any additional I/O (Maximum 20%) required shall be added during Shop Drawing Review and shall be provided at no additional cost to the City.

F. Process Control Functions

Process control function shall be structured to permit the realization of all Control Strategy requirements.

Each control function shall be designed so that bumpless, balance free transfers are obtained during operating mode changeover and/or initialization.

Where applicable, user-changeable parameters shall be automatically defaulted to a preset value if a specific value is not given during system generation.

Provision shall be made to include certain control functions that apply to all analog inputs, virtual variables, analog controllers and discrete control whether or not shown on the P&IDs, even though one or more of the functions may be disabled by the user for a given data base point:

a. Analog Data Scaling

1) This control function shall scale all analog inputs to a common span and shall normalize the digital representation of each analog input to a percent of the operating span.

2) The processed value shall be expressed as a binary number that specifies the analog input's position on a straight line lying between zero and full scale as defined for a given input by the zero span values in the data base.

b. Amplitude Limit Check

1) This control function shall perform dual level, high/low amplitude limit checking and shall identify a limit violation every time a measured or virtual variable goes out-of-limits and returns back into limits.

2) The control function shall determine the time at which each limit excursion occurred.

3) A deadband shall be provided on each limit and shall be expressed as a percentage of span or in engineering units.

4) Low and high limiting default values will be set-up for each measured or calculated variables used in the process control loops.

c. Engineering Unit Conversion

1) This control function shall convert scaled analog data to engineering units by means of the following equation:

a) $Y = ((H - L)(D/DH) + L)$ where

Y is the value in engineering units.

H is the high value of span, expressed in engineering units

L is the low value of span, expressed in engineering units.

D is the digitized scaled input value in counts.

DH is the full scale digitized value in counts

d. Manual Control

1) It shall be possible for operator to interrupt any sequence, loop or automatic operation and operate the same manually through operator workstation.

e. Verification of Digital Outputs

1) This control function shall verify that the equipment has responded to the digital commands before proceeding to next step during automatic operation.

2) If any discrepancy is detected, an alarm will be annunciated.

G. Hardware

The Contractor shall provide all the hardware, whether or not shown or specified that may be necessary to implement the Control Strategies as described in this Section or the Specifications.

H. Configuration

All set points, tuning parameters and engineering scales, etc., shall be documented for each control point and each control strategy on configuration sheets or similar documents.

These documents shall be updated during factory testing and finally during start-up.

I. Control Strategy Displays

Control Strategy displays shall be submitted for review.

Displays shall clearly show initial conditions, start, and progression of the control strategies.

Each Control Strategy shall be displayed in a minimum number of displays for ease of monitoring by the operator.

J. Power Failure

Equipment shall be programmed to automatically reset upon failure.

K. Restart

All equipment and motors shall be automatically restarted after power failure by the control system in an orderly fashion approved by the Engineer.

Final approval of the restart sequence shall be given by the Engineer during factory testing and start-up.

L. Position indication of Gates and Valve in transition.

Open pilot lights and indicators in/at all Control Stations and HMIs shall blink when a gate or valve is in the open transition and shall stay steady on when fully open.

Closed pilot lights and indicators in/at all Control Stations and HMIs shall blink when a gate or valve is in the closed transition and shall stay steady on when fully closed.

1.06 Quality Assurance

A. The Contractor shall comply with the Quality Assurance requirements listed in Section 40 61 13 – PMCS General Requirements.

1.07 Submittals

A. Control Strategies detailed in this Section shall be submitted for approval by the Engineer.

B. The Contractor shall comply with submittal requirements listed in Section 40 61 13 – PMCS General Requirements.

1.08 Delivery, Storage, and Handling

A. The Contractor shall comply with delivery, storage and handling requirements listed in Section 40 61 13 – PMCS General Requirements.

1.09 Spare Parts, Special Tools, and Supplies

A. Not Used

1.10 Special Warranty Provisions / Guarantee Periods

A. Not Used

PRODUCTS

1.11 Manufacturers

A. Control Strategies shall be as implemented by the PMCS Supplier.

1.12 Materials / Equipment

A. Not Used

1.13 Fabrication / Assembling / Finishes

1.14 NORTH CONTROL BUILDING FLUSHING SYSTEM - (TYP. FOR SOUTH CONTROL BUILDING)

DRAWING: I-03

A. Process Overview

1. The flushing system shall be provided to flush strategic areas in interceptor gate chamber via nozzles to prevent debris accumulation. City water is used for flushing.
2. When City water pressure is sufficient (adjustable, the initial setting ≥ 50 psi) to provide required flushing action, water shall be routed directly to the nozzles, by utilizing motor actuated ball valves and bypassing the booster pumps.
3. When City water pressure is insufficient (adjustable, the initial setting < 50 psi) to provide flushing action, pressure will be boosted by pumps. Two booster pumps

(one duty one standby) shall be provided as specified in Section 43 23 13.02 – Pumping Units.

4. The flushing system shall activate automatically for a preset duration (initial setting 10 minutes) on a preset timetable (initial setting at 2 a.m. daily), as determined by the City.
5. The flushing system timetable and duration shall be adjustable.
6. The flushing system shall automatically activate for an adjustable preset duration (initial setting 10 minutes) prior to operation of the gate and continue until gate movement is completed. The gate shall begin travel after the preset flushing timer expires.
7. A manual start and stop of the flushing system shall be provided.

B. Control Operations

1. Relay logic-based controls in the FS-LCP (Flushing system – Local Control Panel) shall initiate flushing cycle (call to run signal) for an adjustable preset time interval (initial setting 10 minutes) at an adjustable preset time (initial setting at 2 a.m. daily) as determined by the City, utilizing timer relays as required.
2. Relay logic-based controls in the FS-LCP shall
   i. initiate flushing cycle (call to run signal) when,
      - Bypass Gate (BG-005) is commanded to open
      - BG-005 is commanded to close
      - Interceptor Gate (IG-006) is commanded to open
      - IG-006 is commanded to close
   ii. keep flushing cycle and call to run signal active, until BG-005 and IG-006 commanded position status is confirmed.
3. Relay logic-based controls in the FS-LCP shall allow,
   - operator to manually initiate flushing cycle (call to run signal) for a field adjustable preset time interval (initial setting 10 minutes) using panel mounted push button if following condition is true.
     - Flushing cycle is not already initiated and active as described above in items 1 & 2
   - operator to manually stop flushing cycle using panel mounted push button, only if all the following conditions are met.
     - Flushing cycle must be initiated manually by the operator from FS-LCP as described above in item 3
     - Flushing cycle must not be initiated automatically as described above in items 1 & 2
4. Water pressure upstream of booster pumps shall be measured by pressure indicating transmitter PIT-001 and transmitted back as 4-20mA analog signal to digital panel meter mounted on FS-LCP.
5. Relay logic-based controls in the FS-LCP, shall initiate a field adjustable system priming timer (initial setting 3 minutes) as soon as flushing cycle initiate (call to run signal) is active.

6. Digital panel meter shall be provided with alarm relay contacts, which shall close after system priming timer has expired and when upstream pressure (PIT-001) reaches a pressure high setpoint PIH-001 (field adjustable at the meter, initially set at 50 PSI) and falls below a low pressure setpoint PIL-001 (field adjustable at the meter, initially set at 0 PSI).
7. Motor Operated Valve (MOV-003):
   a. Local Control
      i. When the LSR selector switch on valve electric actuator is in the LOCAL position,
         - operator shall be able to open and close MOV-003 from valve actuator.
      ii. When the LSR selector switch on valve electric actuator is in the STOP position, MOV-003 shall not operate.
      iii. When the LSR selector switch on valve electric actuator is in the REMOTE position,
         - relay logic controls within FS-LCP shall control MOV-003 as described below.
   b. Remote Manual Control
      i. When the HOA selector switch on FS-LCP panel is in the HAND position,
         - operator shall be able to open and close MOV-003 from FS-LCP mounted selector switches.
      ii. When the HOA selector switch on FS-LCP panel is in the OFF position, MOV-003 shall not operate.
      iii. When the HOA selector switch on the FS-LCP panel is in the AUTO position,
         - relay logic controls in the FS-LCP shall control MOV-003 as described below.
   c. Remote Automatic Control
      i. MOV-003 shall open when flushing cycle initiate (call to run signal) is active.
      ii. MOV-003 shall close when flushing cycle initiate (call to run signal) is deactivated.
8. Water pressure downstream of booster pumps shall be measured by pressure indicating transmitter PIT-004 and transmitted back as 4-20mA analog signal to digital panel meter mounted on FS-LCP.
9. Booster Pumps (BP-001 & BP-002)
   a. Local Control
      i. When the HOA selector switch on the FS-LCP is in the HAND position, operator shall be able to start-stop booster pump from FS-LCP mounted push buttons.
      ii. When the HOA selector switch on FS-LCP is in the OFF position, pump shall not operate.
      iii. When the HOA selector switch on FS-LCP is in the AUTO position, relay logic controls in the FS-LCP shall
         - Run duty pump when flushing cycle initiate (call to run signal) is active.

- switch between duty and standby pumps on failure of duty pump
- rotate duty pump cycles to even out the equipment run-hours, wear and maintenance frequencies.

iv. When running in HAND or AUTO, relay logic controls in the FS-LCP shall either not allow the pump to start or shut it down if it is running upon the following conditions:

1) Pump discharge no-flow condition (as measured by FS-004) remains active for a time delay.
2) Pump high upstream pressure is at or above PIH-001.
3) Pump low upstream pressure is below PIL-001.
4) Pump motor winding temperate is high (TSH-00X, X=1,2).
5) Pump stator temperature is high (TSH-00X, X=1,2 - indicates a dry pump condition).
6) Pump isolation valve (MOV-004) is not fully open.

10. Motor Operated Pump Isolation Valve (MOV-004):

a. Local Control

i. When the LSR selector switch on valve electric actuator is in the LOCAL position,
- operator shall be able to open and close MOV-004 from valve actuator.

ii. When the LSR selector switch on valve electric actuator is in the STOP position, MOV-004 shall not operate.

iii. When the LSR selector switch on valve electric actuator is in the REMOTE position,
- relay logic controls within FS-LCP shall control MOV-004 as described below.

b. Remote Manual Control

i. When the HOA selector switch on FS-LCP panel is in the HAND position,
- operator shall be able to open and close MOV-004 from FS-LCP mounted push buttons.

ii. When the HOA selector switch on FS-LCP panel is in the OFF position, MOV-004 shall not operate.

iii. When the HOA selector switch on the FS-LCP panel is in the AUTO position,
- relay logic controls in the FS-LCP shall control MOV-004 as described below.

c. Remote Automatic Control

i. MOV-004 shall open flushing cycle initiate (call to run signal) is active.

ii. MOV-004 shall close when flushing cycle initiate (call to run signal) is deactivated.

d. When operating in LOCAL or REMOTE, relay logic controls in the FS-LCP shall allow MOV-004 to open if MOV-003 is fully closed and system priming timer has expired.

1.15 NORTH INTERCEPTOR CHAMBER INTERCEPTOR GATE (IG-006) – (TYP. FOR SOUTH INTERCEPTOR CHAMBER)

DRAWING: I-03

A. Process Overview:

1. Interceptor Gate is provided for isolation of 108” interceptor. The interceptor gate will be closed before flood and opened after the flood by a hydraulic cylinder installed in the chamber actuated by hydraulic power unit through series of valves installed in the Interceptor Gate Building above grade. In the closed position the gate will be secured by hydraulically actuated, two (2) dogging pins that will be extended automatically when the gate is fully closed. When open command is selected for the gate, dogging pins will withdraw before the main cylinder is actuated. The main cylinder shall not actuate before each dogging pin retracted status is confirmed. When close command is selected for the gate, each dogging pin status shall be retracted. The main cylinder shall not actuate before dogging pins retracted status is confirmed.
2. In the absence of electric power the gate and the pins will be moved hydraulically by energy stored in the accumulators. To support operation of the hydraulic power unit and accumulators during power loss the control panel will have UPS.
3. Opening and closing of the gate is not automatic and shall occur only on open/close command selected by operator locally or remotely.

B. Control Operations

Local Manual Control

a. When the LPOR (LOCAL-PLC-OFF-REMOTE) selector switch on SCP is in the LOCAL position:

1) relay logic controls within SCP shall control IG-006.

2) Operator shall be able to open-stop-close IG-006, reset alarms, extend-retract dogging pins using SCP mounted selector switches and push buttons.

b. When the LPOR (LOCAL-PLC-OFF-REMOTE) selector switch on SCP is in the PLC position,

1) PLC-005 within SCP shall control IG-006.

2) Operator shall be able to open-stop-close IG-006, reset alarms, extend-retract dogging pins using soft switches on SCP mounted OIT-005.

c. When the LPOR (LOCAL-PLC-OFF-REMOTE) selector switch on SCP is in the OFF position, IG-006 shall not operate.

d. When the LPOR (LOCAL-PLC-OFF-REMOTE) selector switch on SCP is in the REMOTE position,

1) relay logic controls within SCP shall control IG-006 as described below.

Remote Manual Control

e. From Manhattan Pump Station - North Gate Control Panel (MPS-NGCP)

1) When the LR (LOCAL-REMOTE) selector switch on the MPS-NGCP is in the LOCAL position, operator shall be able to open-stop-close IG-006, reset alarms, extend-retract dogging pins using MPS-NGCP mounted selector switches and push buttons.

2) When the LR selector switch on the MPS-NGCP is in the REMOTE position, IG-006 shall be operated from MPS-SCADA system as described below.

f. From MPS-SCADA

1) When MPS-SCADA system has control of the IG-006, the READY soft indicator shall turn on. Operator shall be able to open-stop-close IG-006, reset alarms, extend-retract dogging pins using soft switches within MPS-SCADA system.

When in LOCAL, PLC, or REMOTE mode, relay logic controls in the SCP shall

g. send IG-006 open and close command signals (relay dry contacts) to the Flushing System – Local Control Panel (FS-LCP, provided by Contractor) to initiate flushing cycle (refer to Section 2.04 herein).

h. initiate a flushing cycle delay timer (field adjustable, initial setting 10 minutes) and allow IG-006 to open/close as commanded, only after flushing cycle delay timer expires.

i. turn on flushing cycle delay timer active (on) indicator light.

j. not initiate flushing cycle delay timer when powered only by UPS (utility and generator power is not available) and allow IG-006 to open/close as commanded.

k. not accept OPEN or CLOSE commands if a previous OPEN or CLOSE command is active. A STOP command must first be issued before a new OPEN or CLOSE command is given.

When in LOCAL, PLC, or REMOTE mode, relay logic controls in the SCP shall generate fail-to-open, fail-to-close and fail-to-reach-midpoint alarms when IG-006 fails to reach the respective commanded positions after user adjustable alarm delay timer relays are provided within the SCP and shall function as described below.

l. When on electrical power provided by utility or emergency generator, the alarm delay timers start after the flushing delay timer expires. The respective alarm delay timers shall have initial settings of 17 minutes for midpoint timer and 32 minutes for full open or close position;

m. When on UPS power, the alarm delay timers start immediately after an open or close command is given. The respective alarm delay timers

shall have initial settings of 25 minutes for midpoint timer and 47 minutes for full open or close position;

n. Reset all alarm delay timers once the commanded gate position is reached or a STOP command is selected.

o. If any of the fail-to-open, fail-to-close or fail-to-reach-midpoint alarms are active, the flushing delay timer shall not be initiated and the gate shall operate as commanded immediately.

When in LOCAL, PLC, or REMOTE mode, relay logic controls in the SCP shall extend the dogging pins only after IG-006 closed status is confirmed.

When in LOCAL, PLC, or REMOTE mode, when the gate is fully closed and an open command is selected, relay logic controls in the SCP shall relieve pressure on the dogging pins to facilitate dogging pin retraction prior to gate opening.

When in LOCAL, PLC, or REMOTE mode, relay logic controls in the SCP shall not open and/or close IG-006

p. before dogging pins RETRACTED status is confirmed.

q. before flushing cycle delay timer expires (field adjustable, initial setting 10 minutes).

1.16 NORTH INTERCEPTOR CHAMBER BYPASS GATE (BG-005) – (TYP. FOR SOUTH INTERCEPTOR CHAMBER)

DRAWING: I-03

A. Process Overview:

Bypass gate 24”x24” for the North Interceptor Gate Chamber and 30”x30” for the South Interceptor Gate Chamber is provided to allow limited service flow through the chamber when the interceptor gate is closed. Additionally, the bypass gate is used to support maintenance and repair activities for the interceptor gate.

The bypass gate is normally closed and shall be open prior to operation of the main gate.

In the absence of electric power, the bypass gate will be moved hydraulically by energy stored in the accumulator. To support operation of the hydraulic power unit and accumulators during power loss the control panel will have UPS.

Opening and closing of the gate is not automatic and shall occur only on open/close command selected by operator locally or remotely.

B. Control Operations

When in LOCAL, PLC, or REMOTE mode System Control Panel (SCP) shall control BG-005 as described below.

Local Manual Control

a. When the LPOR (LOCAL-PLC-OFF-REMOTE) selector switch on SCP is in the LOCAL position,

1) Relay logic controls within SCP shall control BG-005.

2) Operator shall be able to open-stop-close BG-005, reset alarms using SCP mounted selector switches and push buttons.

b. When the LPOR (LOCAL-PLC-OFF-REMOTE) selector switch on SCP is in the PLC position,

1) PLC-005 within SCP shall control BG-005.

2) Operator shall be able to open-stop-close BG-005, reset alarms using soft switches on SCP mounted OIT-005.

c. When the LPOR (LOCAL-PLC-OFF-REMOTE) selector switch on SCP is in the OFF position, BG-005 shall not operate.

d. When the LPOR (LOCAL-PLC-OFF-REMOTE) selector switch on SCP is in the REMOTE position,

1) relay logic controls within SCP shall control BG-005 as described below.

Remote Manual Control

e. From MPS-NGCP (North Gate Control Panel)

1) When the LR selector switch on the MPS-NGCP is in the LOCAL position, operator shall be able to open-stop-close BG-005, reset alarms using MPS-NGCP mounted selector switches and push buttons.

2) When the LR selector switch on the MPS-NGCP is in the REMOTE position, BG-005 shall be operated from MPS-SCADA system as described below.

f. Remote Manual Control from MPS-SCADA

1) When MPS-SCADA system has control of the BG-005, the READY soft indicator shall turn on. Operator shall be able to open-stop-close BG-005, reset alarms using soft switches within MPS-SCADA system.

g. When in LOCAL, PLC, or REMOTE mode, relay logic controls in the SCP shall

1) send BG-005 open and close command signals (relay dry contacts) to FS-LCP to initiate flushing cycle (refer to Section 2.04).

2) initiate a flushing cycle delay timer (field adjustable, initial setting 10 minutes) and allow BG-005 to open/close as commanded, only after flushing cycle delay timer expires.

3) turn on flushing cycle delay timer active (on) indicator light.

4) not initiate flushing cycle delay timer when powered only by UPS (utility and generator power is not available) and allow BG-005 to open/close as commanded.

1.17 Source Quality Control / Shop Tests

A. Shop Tests

Shop Testing shall conform to the requirements of Section 40 80 81 – PMCS Factory Testing.

EXECUTION

1.18 Examination / Preparation

A. Not Used

1.19 Installation

A. Not Used

1.20 Field Testing / Quality Control

A. Field Testing

Field Testing shall conform to the requirements of Section 40 80 82 – PMCS Startup and Field Testing.

B. Not Used

1.21 Startup / Demonstration

A. Not Used

1.22 Adjusting / Protection / Cleanup

A. Not Used

END OF SECTION

40 66 00 PROCESS CONTROL SYSTEM NETWORKS

GENERAL

1.01 Summary

A. The Contractor shall furnish, test, install and place in satisfactory operation IEEE 802.3 Ethernet local area network(s) for communications among applicable devices.

B. Local area network shall be provided with all spare parts, accessories, and appurtenances as herein specified.

1.02 Payment

A. There is no separate payment provision for this section.

1.03 Related Sections

A. Section 40 61 13 – PMCS General Requirements

B. Section 40 63 43 – Programmable Logic Controllers

C. Section 40 62 16 – Operator Workstation Computers

1.04 References

A. Instruments furnished with mechanical equipment shall be furnished, installed, tested and calibrated as specified elsewhere in the Contract Documents.

1.05 Description

A. All instrumentation supplied shall be the manufacturer's latest design. Unless otherwise specified, instruments shall be solid state, electronic, using enclosures to suit specified environmental conditions. Microprocessor-based equipment shall be supplied unless otherwise specified. All instruments shall be provided with mounting hardware and floor stands, wall brackets, or instrument racks as shown on the Drawings, or as required.

1.06 Quality Assurance

A. Not used.

1.07 Submittals

A. Not Used

1.08 Delivery, Storage, and Handling

A. Not Used

1.09 Spare Parts, Special Tools, and Supplies

A. The Contractor shall furnish and deliver to the Engineer, at that part of the site and at such time as the Engineer may direct, spare parts listed in the table in section 40 61 22 , article 1.09, E.

B. The following specific spare parts items shall be provided:

A termination tool kit shall be provided containing all required tools and consumables for up to 25 connections of each connection type furnished. Termination kit shall be as manufactured by Black Box, Corning Cable Systems, Optical Cable Corporation, or equal.

One spare switch of each type furnished under this Contract.

1.10 Special Warranty Provisions / Guarantee Periods

A. Not Used

PRODUCTS

1.11 Manufacturers

A. LOCAL AREA NETWORK (LAN)

An IEEE 802.3 Ethernet local area network shall be used for communications between applicable devices.

Network wiring shall be unshielded, twisted-pair copper cables for connections within buildings. Fiber optic media shall be used for all inter-device communication links extended outside of a building, unless specifically noted. Cables shall be as specified herein.

The Contractor may provide a network configuration different from that shown in the Contract Drawings with written approval of the Engineer, but the Contractor shall coordinate with all affected trades and pay for all additional charges incurred.

The Contractor shall supply all hardware, cables, connectors, and software to implement a network as specified herein and shown on drawings.

B. INDUSTRIAL ETHERNET NETWORK SWITCHES

Except where specifically allowed on the Control System Architecture Drawing, industrial Ethernet network switches shall be provided for each device connected to the process control system network. The switches shall create switched Ethernet networks that conform to the IEEE 802.3 and 802.3u standards using copper wires or optical fibers in a bus, tree or ring network topology as shown on the Drawings. Ethernet network switches shall be modular, rack mounted, or standard DIN-rail mounted within the PLC cabinet or in an adjacent communication cabinet, as shown on the Drawings.

Ethernet network switches shall support ring, bus, tree, or point-to-point network topologies. On-line signal monitoring shall be provided to detect and locate impending faults. Ethernet network switches shall be replaceable on-line without disrupting the network. The Ethernet network switches shall be integrated into the Ethernet network to form a redundant ring network with self-healing communication recovery. Switches shall support the non-proprietary Media Redundancy Protocol (MRP) and Rapid Spanning Tree Protocol (RSTP) in addition to the switch manufacturer's standard redundant ring network protocol, all of which shall provide self-healing communication recovery.

Ethernet network switches shall meet the following minimum performance requirements:

a. Functions: Modular managed switch with store and forward switching mode, 10 Mbps Ethernet, or 100 Mbps Fast-Ethernet, or gigabit Ethernet support, multi-address capability, auto-crossing, auto-negotiation, auto-polarity. Port speed and duplex auto-negotiation shall

be configurable. Each network switch shall manage up to eight (8) ports possible via integrated media modules specified below.

b. Management: Simple Network Management Protocol (SNMP) (v1/v2/v3) and Common Industrial Protocol (CIP) support; IGMP filtering and snooping.

c. Power Requirements: Redundant 24 VDC power supply

d. Operating Temperature: 0 to 60 degrees C

e. Relative Humidity: 10 - 95%

f. Network Size: Up to 50 nodes in ring structure

g. Port Type & Quantity (at each PLC location): minimum of four eight (48) 10/100Base-TX, twisted pair cable, RJ-45 sockets, 0-100 meters LAN segment and two (2) 100/1000Base-FX, multimode fiber optic cables (62.5/125 µm), LC, ST or SC sockets, 0-5000 meters LAN segment

h. Link Budget: 8 dB @ 1300 nm; 10 dB @ 850 nm

i. Wavelength: 850 or 1300 nm

Acceptable industrial Ethernet network switches shall be as manufactured by Cisco Systems, Hirschmann, Phoenix Contact, Weidmuller, or equal.

C. OFFICE-GRADE ETHERNET NETWORK SWITCHES

Where specifically called out on the Drawings and where located in a suitable office-type environment (e.g., administration areas), office-grade Ethernet switches shall be provided for connectivity to the process control system network.

Office-grade Ethernet switches shall be rack-mounted as shown on the Drawings and shall meet the following specifications:

a. Functions/Protocol: Same as industrial switches

b. Power Requirements: Redundant 120 VAC power supply

c. Operating Temperature: 0° - 40°C

d. Relative Humidity: 10 - 95%

e. Port Type & Quantity: Minimum of twelve (12) 10/100Base-TX, twisted pair cable, RJ-45 sockets, 0-100 meters LAN segment; two (2) 100/1000Base-FX, multimode fiber optic uplinks (62.5/125 µm), LC, ST or SC sockets, 0-500 meters LAN segment

Office-grade Ethernet switches shall be Catalyst by Cisco Systems, or equal.

D. FIBER OPTIC MEDIA CONVERTERS

Fiber optic media converters shall be provided to transform the specific PLC network communications protocol into an optical signal suitable for transmission over the fiber optic cable specified herein. Fiber optic media converters shall be modular, rack mounted, or mounted within the PLC rack.

Fiber optic media converters shall meet the following minimum performance requirements:

a. Input Power: 110/220 VAC or 24 VDC (as required) for stand-alone panel-mounted modules or +5 VDC for PLC rack-mounted modules

b. Operating Temperature: 0 to 60 degrees C

c. Node-to-Node Distance: 6500 feet

d. Wavelength: 850 or 1300 nanometers

e. Connector Type: SC, LC, or ST

The PLC manufacturer's standard, PLC rack-mounted fiber optic transceiver may also be used, subject to approval by the Engineer.

Port speed and duplex auto-negotiation shall be configurable.

Acceptable fiber optic media converters shall be as manufactured by Black Box, Phoenix Contact or equal.

E. UNSHIELDED TWISTED PAIR CABLE

Unshielded twisted pair cable for drops within buildings shall consist of 4 pair of 24 AWG copper conductors in a flame-retardant jacket. Cable shall be plenum rated (UL 910) and meet EIA/TIA-568 Category 6 specifications. Unshielded twisted pair cable shall be Hyper Grade Extended Distance cable as manufactured by Berk-Tek, Belden equivalent, or equal. Connectors shall be modular RJ-45 plug.

F. FIBER OPTIC CABLE

Fiber optic cable shall conform to the following specifications:

a. Fiber Type: Graded Index (GI) Multimode

b. Fiber/Cladding Diameter: 62.5/125 microns

c. No. Fibers: 12, Color-coded

d. Cable Construction: Loose Tube w/ Ripcords

e. Filling: Water Swellable Dry Block

f. Armored: No

g. Central Member: Dielectric (Kevlar)

h. Rating: Gigabit Ethernet

i. Bandwidth: 200/500 MHz-km at 850/1300 nm

j. Maximum Attenuation: 3.5 dB/km at 850 nm; 1.5 dB/km at 1300 nm

k. Application Type: Direct-burial/Conduit/Aerial

l. Sheath: UV Resistant

m. Max. Tensile Load: 600 lb (2700 N) installation; 200 lb (890 N) long term

n. Minimum Bend Radius: 7 in (17.4 cm) under maximum tensile load; 4.6 in (11.6 cm) unloaded (installed)

o. Operating Temperature: -40 to 70 degrees C

p. Operating Relative Humidity: 0 to 100%

Fiber optic cable shall be ALTOS All Dielectric Loose Tube Optical Cable as manufactured by Corning Cable Systems, the Extended Performance Fiber Optic Cable Series as manufactured by Phoenix Digital, Inc., Belden equivalent, equivalent system by Optical Cable Corporation, or equal.

Upon entering a cabinet, panel or console, loose tube fiber optic cable shall be broken out using fan-out kits and terminated in a fiber optic patch panel. All individual fibers shall be terminated and all connections shall be tested. Tight buffered cable shall then be routed to the individual destinations as needed (or loose tube cable for runs to other buildings). Cabinet-mounted patch panels shall be Cabinet-Mounted Interconnect Center (C-MIC) as manufactured by Corning Cable Systems, equivalent by Black Box, Inc., Optical Cable Corporation, or equal.

Where cable is required to be routed to numerous, separate destinations within a building, loose tube cable shall be broken out immediately upon entering the building, all individual fibers terminated in a patch panel, and tight buffered, plenum rated cable shall be routed to the individual destinations. Building patch panels shall be Wall-Mountable Interconnect Center (WIC) or Premises Interconnect Center (PIC) as manufactured by Corning Cable Systems, equivalent by Black Box, Inc., Optical Cable Corporation, or equal.

Fiber optic cable for installation within buildings shall comply with all applicable fire and building safety codes for such applications.

Fiber optic cable shall utilize mechanically spliced, field installable, SC, LC, or ST compatible connectors. Connections shall have a typical loss of 0.35 dB or better and shall provide stable optical performance after numerous rematings. Connections shall utilize physical contact terminations utilizing UV or heat cured adhesive. Where applicable, field terminations shall use a simple procedure requiring minimal training.

1.12 Materials / Equipment

A. Not Used

1.13 Fabrication / Assembling / Finishes

A. Not Used

1.14 Source Quality Control / Shop Tests

A. Not Used

EXECUTION

1.15 Examination / Preparation

A. Not Used

1.16 Installation

A. The destination of all network data cables (both copper and fiber) leaving an enclosure, patch panel, or building shall be labeled at each end using industry-standard wire markers.

1.17 Field Testing / Quality Control

A. Not Used

1.18 Startup / Demonstration

A. Not Used

1.19 Adjusting / Protection / Cleanup

A. Not Used

END OF SECTION

SECTION 40 66 53 – TELEMETRY SYSTEM

SPECIAL WORKS – IG/PC

---

40 66 53 TELEMETRY SYSTEM

GENERAL

1.01 THE REQUIREMENT

A. The Contractor shall furnish, test, install and place in satisfactory operation the cellular telemetry system, with all spare parts, accessories, and appurtenances as herein specified and as shown on the Drawings.

B. The Telemetry System shall be provided with all required enclosure, cellular modems, antennas, PLC, UPS, ethernet switch, power supplies, cable, spare parts, accessories, and appurtenances as required for reliable and satisfactory operation.

C. Contractor shall be responsible for installation and configuration of Telemetry System equipment which shall be used to facilitate communication between the remote sites.

1.02 RELATED WORK SPECIFIED ELSEWHERE

A. Section 40 61 13 - PMCS General Requirements

B. Section 40 66 00 - Process Control System Networks

C. Section 40 67 63 - Uninterruptible Power Systems

D. Section 40 67 16 - PMCS Panels and Enclosures

1.03 TOOLS, SUPPLIES AND SPARE PARTS

A. Tools, supplies and spare parts shall be provided as specified in Section 40 61 22, Article 1.09, E.

B. The following specific spare parts items shall be provided:

1. One of each type cellular modem.
2. One of each type of miscellaneous hardware device for telemetry equipment furnished under this Contract (lightning arresters, etc.).
3. One hand-held diagnostic terminal or software and accessories shall be provided for diagnostic and programming functions.
4. One spare antenna.

1.04 SUBMITTALS

A. As required under Section 40 61 15 - Process Control System Submittals.

PRODUCTS

SECTION 40 66 53 – TELEMETRY SYSTEM

SPECIAL WORKS – IG/PC

1.05 GENERAL

A. All communications equipment shall be installed in accordance with the manufacturer's recommendations, cellular service provider, and details on the Contract Drawings.

B. Telemetry system equipment shall have a minimum of 4 hours of back-up power.

C. All telemetry system equipment power and signal lines that extend outside of an enclosed structure shall be protected from lightning and voltage surges in accordance with the requirements of Section 40 78 56 - Isolators, Intrinsically-Safe Barriers, and Surge Suppressors.

D. Although system configuration may be shown on the Control System Block Diagram, the telemetry system shall be implemented in conjunction with actual installation conditions to provide a trouble-free reliable transmission system.

1.06 TELEMETRY SYSTEM SCHEDULE

EQUIPMENT	MODEL	MANF.	QTY.	REMARKS
PLC	Unity Momentum M1E with I/O & power supply	Schneider Electric	1	Provide programming software and Input/Output expansion modules as required
Cellular Modem	IR807	Cisco	1	4G LTE cellular dual provider router (CDPR)
Antenna	IR800 series	Cisco	2	As per manufacturer recommendation
UPS			1	Refer to Spec Section 40 67 63
Ethernet Switch			1	Refer to Spec Section 40 66 00
Terminal Blocks			As required	Refer to Spec Section 40 78 90
Power Supply			As required	Refer to Spec Section 40 78 90
Relay			As required	Refer to Spec Section 40 78 90
Relay Base			As required	Refer to Spec Section 40 78 90

Circuit Breaker			As required	Refer to Spec Section 40 78 90
Surge & Lightning Protection Devices			As required	Refer to Spec Section 40 78 56
Enclosure			1	Refer to Spec Sections 40 67 16

1.07 LIST OF SIGNALS BETWEEN NORTH CONTROL BUILDING (north-tp plc) AND Manhattan Pump Station (existing MPS-TP PLC)

A. Digital Input (to existing MPS-TP PLC)

Flush active / Flow OK (North FS-LCP, Flushing System -Local Control Panel)

Flush cycle delay timer active (SCP – System Control Panel)

Bypass gate (BG-005) in REMOTE mode (SCP – System Control Panel)

BG-005 in LOCAL mode (SCP)

BG-005 in PLC mode (SCP)

BG-005 open indication

BG-005 closed indication

BG-005 in transit indication

BG-005 fault indication

Interceptor gate (IG-006) in REMOTE mode (SCP)

IG-006 in LOCAL mode (SCP)

IG-006 in PLC mode (SCP)

IG-006 open indication

IG-006 closed indication

IG-006 in transit indication

IG-006 mid-position indication

IG-006 fault indication

IG-006 Fail-To-Open fault indication

IG-006 Fail-To-Reach-Mid-Position fault indication

IG-006 Fail-To-Close fault indication

IG-006 lower dogging pin extended indication

IG-006 lower dogging pin retracted indication

IG-006 upper dogging pin extended indication

IG-006 upper dogging pin retracted indication

UPS Fault (NORTH-TP)

NORTH-TP ON UPS POWER

UPS Fault (NORTH SCP)

NORTH SCP ON UPS POWER

B. Digital Output (to existing MPS-TP PLC)

Bypass Gate (BG-005) & Interceptor Gate (IG-006) Alarm reset command

BG-005 open command

BG-005 close command

BG-005 in REMOTE mode (NGCP – North Gate Control Panel)

BG-005 in LOCAL mode (NGCP)

IG-006 open command

IG-006 close command

IG-006 lower dogging pin extend command

IG-006 lower dogging pin retract command

IG-006 upper dogging pin extend command

IG-006 upper dogging pin retract command

IG-006 in REMOTE mode (NGCP)

IG-006 in LOCAL mode (NGCP)

Modem/Router reset

1.08 LIST OF SIGNALS BETWEEN SOUTH CONTROL BUILDING (SOUth-tp plc) AND Manhattan Pump Station (existing MPS-TP PLC)

A. Digital Input (to existing MPS-TP PLC)

Flush active / Flow OK (South FS-LCP, Flushing System -Local Control Panel)

Flush cycle delay timer active (SCP – System Control Panel)

Bypass gate (BG-015) in REMOTE mode (SCP – System Control Panel)

BG-015 in LOCAL mode (SCP)

BG-015 in PLC mode (SCP)

BG-015 open indication

BG-015 closed indication

BG-015 in transit indication

BG-015 fault indication

Interceptor gate (IG-016) in REMOTE mode (SCP)

IG-016 in LOCAL mode (SCP)

IG-016 in PLC mode (SCP)

IG-016 open indication

IG-016 closed indication

IG-016 in transit indication

IG-016 mid-position indication

IG-016 fault indication

IG-016 Fail-To-Open fault indication

IG-016 Fail-To-Reach-Mid-Position fault indication

IG-016 Fail-To-Close fault indication

IG-016 lower dogging pin extended indication

IG-016 lower dogging pin retracted indication

IG-016 upper dogging pin extended indication

IG-016 upper dogging pin retracted indication

UPS Fault (SOUTH-TP)

SOUTH-TP ON UPS POWER

UPS Fault (SOUTH SCP)

SOUTH SCP ON UPS POWER

B. Digital Output (to existing MPS-TP PLC)

Bypass Gate (BG-015) & Interceptor Gate (IG-016) Alarm reset command

BG-015 open command

BG-015 close command

BG-015 in REMOTE mode (SGCP – South Gate Control Panel)

BG-015 in LOCAL mode (SGCP)

IG-016 open command

IG-016 close command

IG-016 lower dogging pin extend command

IG-016 lower dogging pin retract command

IG-016 upper dogging pin extend command

IG-016 upper dogging pin retract command

IG-016 in REMOTE mode (SGCP)

IG-016 in LOCAL mode (SGCP)

Modem/Router reset

1.09 PROGRAMMING SOFTWARE

A. The PLC programming and configuration software shall be the manufacturer's latest, full-featured version, Windows-based, and shall be fully compliant with IEC 61131-3 standards. The software package shall consist of all programming, configuration, and documentation software needed to place the control and information system in satisfactory operation. The software shall allow on-line and off-line program development and documentation. PLC programming software shall include documentation on optical media.

B. A minimum of one copy of the PLC programming software shall be purchased by the instrumentation subcontractor and registered to the City.

C. All necessary configuration and programming software including but not limited to the customized project specific application programs shall be provided on optical media and turned over to the City.

EXECUTION

1.10 REQUIREMENTS

A. Antenna(s) shall be mounted on the top of the remote enclosure for outdoor units, or on the outside of the building, as shown, for units located indoors.

B. Signal strength and communication integrity shall be tested and verified in the proposed antenna locations prior to installing the antenna and associated cable. Engineer shall be notified immediately if it is determined that conditions are inadequate for reliable communication at these locations.

C. Networking equipment shall be installed as indicating on drawings. Wall mount or provide wall-mount shelf for networking equipment.

D. Contractor shall coordinate with Engineer, PLC, cellular modem manufacturers to include programming/logic to prioritize critical alarm callouts from PLC, cellular modems in emergency situations. Contractor shall be responsible for providing necessary hardware and software as recommended by the manufactures, to implement this functionality.

E. Refer to Section 40 61 13 for additional requirements.

END OF SECTION

40 67 16 PMCS PANELS AND ENCLOSURES

GENERAL

1.01 Summary

A. The Contractor shall provide all labor, supervision, materials, equipment and incidentals as shown, as specified and required to furnish, install, calibrate, test, start-up and place into satisfactory operation all control panels and/or equipment enclosures, termination cabinets and all associated equipment, as indicated on the Contract Drawings and as specified in this Section.

B. A schedule of system panels is provided at the end of this Section for the convenience of the Contractor. The schedule may not indicate all panels and does not indicate all enclosures required for this Contract. The Contractor shall furnish and install all panels and enclosures as required.

1.02 Payment

A. There is no separate payment provision for this Section.

1.03 Related Sections

A. Section 05 05 23 – Metal Fastenings.

B. Section 26 05 53 – Identification for Electrical Systems.

C. Section 26 29 13 – Enclosed Controllers.

D. Section 40 61 13 – PMCS General Requirements.

1.04 References

A. Definitions

Section 40 61 13 – PMCS General Requirements defines the terms and abbreviations used in this Section and the PMCS

B. Reference Standards

Section 40 61 13 – PMCS General Requirements lists the standards applicable to this Section and the PMCS.

1.05 Description

A. Not Used

1.06 Quality Assurance

A. The Contractor shall comply with the Quality Assurance requirements listed in Section 40 61 13 – PMCS General Requirements.

1.07 Submittals

A. The Contractor shall comply with submittal requirements listed in Section 40 61 13 – PMCS General Requirements.

1.08 Delivery, Storage, and Handling

A. The Contractor shall comply with delivery, storage and handling requirements listed in Section 40 61 13 – PMCS General Requirements.

1.09 Spare Parts, Special Tools, and Supplies

A. The Contractor shall furnish and deliver to the Engineer, at that part of the site and at such time as the Engineer may direct, spare parts listed in the table In Section 40 61 22 , Article 1.09, E.

B. The spare parts shall be listed in an index and packed in containers suitable for long term storage, provided with labels clearly designating the manufacturer's part number with complete information for use and reordering.

C. The Contractor shall provide the following:

Ten (10) percent (minimum of 1), spare space heaters of each type and rating.

Ten (10) percent (minimum of 1), spare heater thermostats of each type

One (1) spare lighting fixture and switch of each type provided.

Ten (10) percent (minimum of 2), spare power supply, regulator, power conditioner, etc., of each type and rating provided.

Ten (10) percent (minimum of 1), spare thermal control device (fan, air conditioner, heat exchanger, etc.) for each type and rating provided.

Ten (10) percent (minimum of 10), spare fuses, circuit breakers, equipment mounting (DIN) rails.

Twenty-five (25) percent (minimum of 100) spare terminals of each type provided for the entire project.

Spare parts as recommended by the individual equipment manufacturers.

1.10 Special Warranty Provisions / Guarantee Periods

A. Not Used

PRODUCTS

1.11 Manufacturers

A. NEMA 4, 4X and 12 panels and enclosures shall be as manufactured by:

Hoffman, Anoka, MN;

Eaton B-Line, Highland, IL;

Or approved equal.

B. NEMA 7 panels and enclosures shall be as manufactured by:

Adalet, Cardington, OH;

Eaton Crouse-Hinds, Syracuse, NY;

Or approved equal.

C. Fiberglass or polycarbonate panels and enclosures shall be as manufactured by:
Adalet, Cardington, OH;
Eaton Crouse-Hinds, Syracuse, NY;
Or approved equal.

D. Wire troughs and wire management shall be as manufactured by
Panduit, Lockport, IL;
Or approved equal.

E. Circuit breakers shall be as manufactured by:
Siemens Industry, Inc., Washington, DC;
Allen Bradley (Cat No 1492, 1492-GH);
Or approved equal.

F. Surge protection products shall be as manufactured by:
Schneider Electric, East Haven, CT;
Thomas & Betts Joslyn, Memphis, TN;
Or approved equal.

G. Terminal blocks shall be as manufactured by:
Entrelec, Montgomery AL;
Or approved equal.

H. Fused Terminal blocks shall be as manufactured by:
Allen-Bradley;
Phoenix Contact, Middletown, PA;
Or approved equal.

I. Panel or enclosure heaters shall be as manufactured by:
Hoffman (DAH8001B), Anoka, MN;
Or approved equal.

J. Panel or enclosure corrosion inhibitors shall be as manufactured by:
Hoffman (HCI series), Anoka, MN;
Or approved equal.

K. Panel or enclosure heat exchangers shall be as manufactured by:
Hoffman (Spectracool), Anoka, MN;
Or approved equal.

1.12 Materials / Equipment

A. Not Used

1.13 Fabrication / Assembling / Finishes

A. General Requirements:

Furnish and install panels, boxes and enclosures with a NEMA rating based on the table listed in Appendix A in this Section.

Panels and enclosures shall meet or exceed the NEMA and NYCEC requirements for the area in which they are installed.

Unless otherwise specified or indicated, panels and enclosures shall have a NEMA 4X rating and shall be fabricated of 316 stainless steel.

Panels provided as part of a packaged system, from an equipment vendor, (sump pumps, seal water pumps, VFDs, etc.) shall comply with all requirements specified in this Section.

The NEMA rating of panels, enclosure and devices shall be as required in their individual Sections if so specified.

The sizes of panels and enclosures shown on the Contract Drawings are estimates.

The Contractor shall furnish enclosures of the size required to house all equipment, instruments, front panel mounted devices, power supplies, power distribution panels, wiring, tubing, and other components installed in the enclosures while maintaining adequate free space within the enclosure.

Panel, box and enclosure doors shall be continuously hinged and shall be of pan construction. Clamp type closures shall be provided.

Adequately support and restrain all devices and components mounted on or within the panel to prevent any movement.

a. Provide sub-panels for installation of all internally mounted components.

b. Provide mounting strips for installation of all relays and other components where mounting strips are practical.

c. Sub-panels shall be pan construction to prevent warping.

Devices shall be arranged to allow adequate wiring room for ease of connections and servicing.

All panel and enclosure components shall be identified both inside and out with engraved, laminated plastic name plates.

Panels shall be provided with an engraved laminated plastic sign inscribed "WARNING – This Device Is Connected to Multiple Sources of Power ". Letters shall be 1/2" high, white on a red background

Provide all electrical and/or pneumatic connections, components and devices, support hardware, fasteners, interconnecting wiring and/or piping required to make the control panels complete and operational units.

Provide bulkhead fittings for all gas, liquid piping and tubing leaving panels and enclosures.

Provide all panel-mounted pilot devices as shown and specified.

Locate and install all devices, wiring, and components so that connections can be easily made and there is ample room for servicing each item.

Components for installation on panel exterior shall be located as shown on the Contract Drawings or as directed by the engineer.

d. Layouts shall be submitted for approval.

e. All exterior panel mounted instruments shall have a NEMA rating equal to or greater than the enclosure.

f. For panel mounted devices which cannot be obtained with the correct NEMA rating equal to the enclosure, the device shall be mounted behind a transparent viewing window or door, manufactured for the purpose that provides the proper rating.

g. The viewing window or door shall maintain the NEMA rating of the enclosure and be easily opened for access to the instruments.

Where permitted by location and layout as shown on the Contract Drawings, all panels and enclosures shall have full height rear access doors, unless otherwise shown.

Where rear doors are not possible, panels shall have full height front access doors.

All wiring to panel connections from field instruments, devices, and other panels shall be terminated at master numbered terminal strips, unless otherwise specified.

Free standing control panel, enclosure or any panel with a dimension of 36 inches or more shall comply with the following:

h. Provide at least one 120 VAC, 15 Amp duplex, grounding type receptacle.

i. At least one 120 VAC LED light fixture complete with a protective plastic shield and capable of generating 25 foot candles on all the components within the enclosure.

j. One 120 VAC, 15 Amp, snap switch in an outlet box with a cover to turn on the light. The switch shall be located so that it is easily accessible from the door.

k. The service light with switch and duplex receptacle shall have their own circuit breaker.

l. The bottom 12 inches and top 6 inches of free-standing panels shall be free of all devices, including terminal strips, to provide ease of installation, wiring and testing.

m. In general, panel indication and control devices shall be mounted within a range of 40 to 72 inches above the operating floor but not less than 36 inches nor greater than 78 inches unless otherwise shown on the Contract Drawings.

n. Annunciators or alarm message display devices shall be mounted up to 84 inches above the operating floor.

o. All instrument read-outs and displays shall be in ENGINEERING UNITS of the desired process variable. Percent of scale or digital counts are not acceptable unless approved in writing by the Engineer.

p. Panels shall be constructed with an integral fully enclosed solid bottom section at least 6 inches in height from the bottom of the enclosure to the bottom edge of the enclosure door opening.

q. Free standing enclosures shall be mounted on concrete base pad.

r. Free standing panels installed in areas with raised computer type floors shall be provided with an adjustable, welded steel support frame to support the panel from the building structure.

1) The frame load rating shall have a 50 percent safety factor.

2) The frame shall be coordinated with the flooring being installed and shall be flush with the height of the raised floor.

B. Panel and Enclosure Fabrication:

Panels and enclosures shall be fabricated as indicated on the Contract Drawings and as specified in this Section.

a. Control panels and enclosures shall be assembled, wired, and tested in the PMCS Supplier's own or other Engineer approved facility.

b. All components and all necessary accessories such as power supplies, power conditioning equipment, mounting hardware, input and output terminal blocks, plug strips, relays, lighting, circuit breakers, fuses, and other components which may be required to complete the system shall be provided.

c. The Contractor is directed to review the area classifications with regards to hazardous atmospheres, as they are defined by the NYCEC and NFPA 820.

1) Many areas of the facility within the scope of this Contract are classified as NYCEC Class I, Division I or II hazardous and all construction shall meet those requirements.

2) All equipment, controls, instruments, panels, enclosures, etc., for use in these areas, shall be constructed to meet the area requirements.

d. All control panels and enclosures shall be of formed or welded construction of steel or stainless steel, as required, unless otherwise noted.

e. Panels and enclosures shall be fabricated in accordance with the NEMA ratings as specified, shown, or required.

f. Panels and enclosures shall meet or exceed the requirements of the area in which they are located.

g. As a minimum, a NEMA 12 rating shall be required in all non-corrosive areas and NEMA 4X S/S in outdoor, process, and corrosive areas

h. Where enclosure size or weight requires, provide lifting eye bolts to facilitate handling of the enclosures.

   1) All panels or enclosures with any dimension 72 inches or greater or with a weight in excess of 150 pounds, shall be equipped with lifting eyes.

   2) Bolt lifting eyes directly through the enclosure structural members.

i. Continuously weld all exterior seams and grind smooth.

j. Reinforce sheet steel with steel angles where necessary to adequately support equipment, ensure rigidity, and preclude distortion and resonant vibrations.

k. Panels and enclosure surfaces shall be flat within 1/16 inch over a 24 inch by 24-inch area, or flat within 1/8 inch for a larger surfaces.

   1) Flatness shall be checked by using a 72-inch-long straight edge.

   2) Out-of-flatness shall be gradual, in one direction only, and shall not consist of obvious depressions or a series of wavy sections.

l. Use pan-type construction for doors.

   1) Door widths shall not exceed 36 inches.

   2) Mount doors with full-length heavy-duty continuous piano hinge with stainless steel hinge pins.

   3) Provide handle-operated, oil-tight, key-lockable three-point stainless steel latching system with rollers on latch-rods for easy door closing.

   4) Provide oil resistant continuous gasket completely around each door or opening.

m. Provide interior mounting panels and shelves constructed of minimum 12-gauge steel with a white enamel finish.

n. Provide steel print pocket with white enamel finish.

o. Use 304 stainless steel fasteners throughout.

p. Provide Type 316 stainless steel sun shielding for all outdoor panels.

q. Panels and enclosures shall have adequate wiring space provided on the top and bottom.

   1) A minimum of six (6) inches of clear space shall be provided between enclosed equipment and the top and the bottom of the enclosure.

2) Additional space shall be provided when a large number of conduits or wires enter the enclosure.

r. Provide enclosure mounting supports or bases as required for floor, frame, or wall mounted enclosures, and for free standing enclosures.

1) For floor mounted enclosures, provide minimum 12-gauge stainless steel floor stand kits bolted to the bottom of the enclosure, sealed and gasketed to maintain the NEMA rating.

2) Floor stand heights shall be coordinated with enclosure sizes and base pads to comply with the general indication and control device mounting height requirements as specified in this Section or as shown on the Contract Drawings.

3) Floor stands shall be mounted on base pads using anchor bolts or expansion anchors.

s. All panels shall have solid bottoms.

1) Removable panels may be provided to ease punching of conduit entries.

2) Panels and enclosures mounted on raised floors may have open bottoms but shall comply with all codes.

t. Provide all necessary holes and cutouts for installation of equipment.

1) Openings shall be punched or saw cut without distorting the face of the panel.

2) Flame cutting is prohibited.

3) All openings shall be ground straight, square, level and smooth.

u. Provide space and clear area for entry of conduit and wire.

v. Cable and piping shall enter the enclosure through the bottom whenever possible.

w. All conduit and piping openings and all conduits shall be sealed watertight and maintain the NEMA rating of the panel.

x. Panels located inside air-conditioned control room areas shall be NEMA 12 rated stainless steel unless otherwise noted.

y. Fabricate enclosures using minimum 14-gauge stainless steel for wall or frame-mounted enclosures and minimum 12-gauge stainless steel for floor mounted and free standing enclosures. Steel shall be free of pitting and surface blemishes.

z. Standard prefabricated enclosures are preferred.

aa. When required by area classification or Contract Documents, NEMA 7 panels and devices shall be provided.

1) Panels and enclosures, to be installed in areas classified as hazardous (Class I, Div. I or II), per Contract Documents or

Codes, shall be constructed to NEMA 7 and Class I, Division I, Group D requirements.

2) In damp or corrosive areas, these panels shall have an "O" ring seal on the door, to prevent entry of corrosive atmospheres.

3) These panels shall be manufactured with all necessary tapped openings to accept devices and conduit entry.

4) Ten (10) percent (minimum of one (1) spare, plugged, tapped, openings shall be provided for each size furnished.

5) Field tapping is not permitted.

C. Environmental Controls

Outdoor Panels:

a. Provide thermostatically controlled heaters to maintain temperature inside each enclosure 10°F above the ambient temperature, above 40°F., or that required for component operation (whichever is greater), and to prevent interior condensation over an outside ambient temperature range of -20°F through 120°F.

b. Provide automatically controlled closed-loop heat exchangers or closed loop air conditioners with filtered air louvers when required to maintain temperature inside each enclosure below the maximum operating temperature rating of the components inside the enclosure.

c. Provide internal corrosion inhibitor devices for corrosion control inside of each enclosure.

d. Outdoor panels shall be designed to withstand wind driven rain and snow without any moisture entry. The panel shall not be damaged by the buildup of ice or snow.

D. Indoor Panels:

Provide automatically controlled heaters as required to maintain temperature approximately 10°F above ambient for condensation prevention inside panels.

1) Panel heaters shall be thermostatically controlled, fan-driven heaters, with all components mounted in an anodized aluminum housing for sub-panel mounting.

2) The heaters shall be powered from 115 VAC from a dedicated circuit breaker and separate panel power feed.

Provide automatically controlled closed loop heat exchangers or closed loop air conditioners with filtered air louvers if required to maintain temperature inside each enclosure below the maximum operating temperature rating of the components inside the enclosure.

3) Heat exchangers and air conditioners shall be of a dual loop design to isolate panel interior air from exterior air.

4) The units shall be thermostatically controlled and shall be powered at 115 VAC from a dedicated circuit breaker and separate panel power feed.

E. Electrical

General:

a. Control panel power supply source type, voltage, number of circuits and circuit ratings shall be as shown on the Contract Drawings and as required by the equipment.

b. Unless otherwise noted, power supply to all panels shall be 120VAC 60 Hz.

c. Surge and lightning protection shall be provided for all electronic equipment.

d. Uninterruptible Power Supply (UPS) units shall be provided to power panels as indicated on the Contract Drawings.

1) As a minimum, a UPS shall be provided for all panels and enclosures containing network, PLC, gas detection, etc. equipment. UPS units shall be furnished and installed as specified.

e. The panels and enclosures shall be provided with internal 120 VAC, 20-amp DIN rail mounted circuit breakers sized as required to distribute power to the panel components and field instruments.

f. Provide quantity of circuits shall include 25 percent spares.

g. Provide a durable legend mounted near the circuit breakers in each panel, which lists the circuit breaker numbers and circuit descriptions.

h. Provide circuit breakers to protect each circuit, with no more than six instruments on a single circuit.

i. Provide DC power supplies of quantities and sizes as required for powering DC signal and control loops.

j. Where wires pass through adjacent panel walls, provide suitable grommets or bushings to prevent cutting or damage of insulation.

k. When DC power and/or low voltage AC power is required, provide and install the necessary power supplies, transformers, regulators and fuses in the panel.

l. All spare field and panel wires, within each panel or enclosure, shall be tagged as spare and labeled and marked as per specifications with “As-Builts” showing their source and destination.

m. Provide complete approved schematic and wiring diagram including spare wiring, showing "As-Built" circuitry.

n. In addition to required submittals, the final approved "As-Built" diagram shall be enclosed in transparent plastic and placed in an easily accessible drawing pocket built in the panel or enclosure door.

Electrical Wiring and Accessories:

o. Unless otherwise specified, internal wiring shall be Type MTW stranded copper wire with thermoplastic insulation rated for 600 Volts at 85°C for single conductors.

p. Wiring shall be color coded and labeled with wire identification.

q. For DC signal wiring, use No. 16 minimum AWG twisted tinned copper pairs with overall braided copper shield and drain wire.

r. For AC power wiring, use No. 12 minimum AWG. For AC and DC control use No.14 AWG wiring. For wiring carrying 10 Amps or more, use sizes required by NYCEC.

s. Install wiring runs in ventilated wire troughs along horizontal or vertical routes to present a neat appearance.

1) Wire trough shall be filled to no more than 40 percent capacity. Angled runs are not acceptable.

2) Separate and shield DC signal wiring from power and control wiring by a minimum of 4 inches, using separate wire troughs.

3) Separate troughs shall be provided for field wiring.

4) Where practical, in the panels and enclosures, route the low voltage DC signal wiring along the left side of the enclosure sub-panel(s) and route the AC power and control wiring to the right side of the sub-panel(s), with the incoming power and distribution circuit breakers located to the upper right.

t. Group or bundle parallel runs of wire using covered troughs. Maximum bundle size to be 1 inch. Troughs shall have 60 percent spare capacity. Adequately support and restrain all wiring runs to prevent sagging or other movement.

u. In panels controlling and monitoring equipment operating or fed at voltages above 600, wiring used for AC or DC, control, control power, metering, indication, etc. shall be No.14 AWG type SIS (switchboard) wire.

v. Wiring for current transformer (C.T.) circuits shall be minimum #10 AWG type SIS and shall be color coded yellow. Connections shall be by ring type solderless compression terminals (such as Sta-Kon®).

w. Where wiring runs across a door or panel hinge, the bundle shall be run along the hinge as far as possible and anchored at both ends to distribute the torque along the greatest wire length.

x. Wire bundles running within a panel or onto the door, shall have at least 20 percent spare wires included.

Terminal Blocks:

y. Terminate all field wiring and internal panel wiring at 600 Volt barrier type terminal blocks.

z. Panel wiring shall be kept to one side of the strip leaving the other side for field wire termination.

aa. Jumpers needed to provide common connections between terminals shall be provided on the panel side of the strip.

bb. Terminal blocks shall be tubular screw type with pressure plate capable of accepting #22 through #8 wires and shall be mounted on rigid steel rail.

cc. All wiring terminations, both field and panel shall be made with forked tongue solderless crimp type connectors. Field wiring terminals shall have a minimum of a # 8 screw or stud.

dd. Heavy duty end anchors shall be provided on both ends of all terminal strips to firmly anchor the terminal blocks to the mounting rail and insulating end barriers shall be provided on one end of the terminal strip as necessary.

ee. Terminal blocks shall have a unique identifier for each block and for each terminal on that block (i.e. TB7-25) where the terminal number shall be the unique wire number shown on the approved drawings.

ff. No more than two wires shall be terminated at any single screw.

gg. Provide jumpers as required to join adjacent terminal blocks for additional wiring connection points. Jumpers shall only be installed on the panel side of the terminal block.

hh. All terminal blocks shall be labeled with permanently affixed numeric identifiers on each block.

ii. Identifiers shall be self-stick plastic strips with permanent, machine printed numbers.

jj. Provide a separate terminal block for landing analog signal cable shield, and separate terminal strips for DC signal and AC power wiring. A separate terminal shall be provided for landing shield wiring.

kk. Provide separate terminal blocks for C.T wiring. Terminal blocks for C.T. wiring shall be equipped with shorting bars and screws to selectively short an individual C.T. circuit for maintenance purposes.

ll. Provide spare terminal blocks equal in number to 20 percent of the terminals used for each type of wiring (i.e., DC signal and AC power).

mm. Terminal blocks shall be copper-nickel alloy terminal strips and screws.

nn. Terminal blocks shall have minimum clearance of 5 inch on each side of each strip.

Fused Terminal Blocks:

oo. Provide fused terminal blocks for all wiring powered from within panels or enclosures to devices located outside the panel or enclosure, as required.

pp. Fused terminal blocks shall be UL approved, 600 Volts, capable of accepting #22 through #10 wires, and shall be mounted on rigid steel rail. Fuses shall be dead front and shall have safety pull out feature.

qq. Heavy-duty end anchors shall be provided on both ends of all terminal strips to firmly anchor the terminal blocks to the mounting rail and insulating end barriers shall be provided on one end of the terminal strip as necessary.

rr. Provide fuses (sized as required) and fuse pullers for all fused terminal blocks.

ss. Provide 20 percent spare fused terminal blocks rail mounted within each panel or enclosure.

tt. Terminal blocks shall be copper-nickel alloy terminal strips and screws.

Wire Markers:

uu. All panel wires and field wires shall have an alphanumeric identification tag at each point of termination.

vv. Wire numbers shall be unique.

ww. Wire numbers shall be grouped and spaces allowed for additions to each group.

xx. Where wire numbers change, the appropriate drawings shall include both wire numbers, clearly indicated, at the point of transition.

yy. Each wire number shall be solid, machine printed, and not pieced from other single and/or double digit tags. Wire markers shall be heat, oil, water, tear and solvent resistant, vinyl, tube type markers.

zz. All wire labels shall be clearly visible and not hidden by wire duct or other components in the enclosures. All wiring shall be installed such that if wires are removed from any one device, power will not be disrupted to any other device.

Grounding / Bonding:

aaa. All equipment and components mounted in or on control panels and enclosures, shall be bonded to the equipment grounding system.

bbb. Provide 1-inch-wide by 1/4 inch thick copper grounding bar in each panel or enclosure containing equipment, instruments or controls.

ccc. The bar shall be as long as needed for the required number of connections, plus 25% future connections (6 inch minimum).

ddd. Ground bars shall be installed on insulated "standoffs" (1-inch clearance from grounded surfaces), and shall have a braided #6 AWG bonding jumper.

eee. Separate buses shall be provided for grounding of AC equipment and for shield grounds.

fff. The AC ground bus shall be bonded to the panel frame and system ground.

ggg. Shield grounds shall be completely isolated from the enclosure and instrument power/equipment grounds.

hhh. Insulated ground wires shall be run with all control power circuits within the panel to all equipment.

iii. Equipment mounting sub-panels (plates) shall be bonded to the frame of the enclosure with a No. 10 AWG braided bonding jumper.

F. Finishes

Steel Panels

a. Panels located in control rooms, electrical equipment (switchgear, MCCs) rooms, and office areas, may be carbon steel with a finish as follows:

1) Completely clean all interior and exterior surfaces so they are free of corrosive or oily residue, oil, grease, and dirt.

2) All interior and exterior surfaces shall be phosphatized for corrosion protection for non-stainless steel enclosures.

3) One coat of primer shall be applied to all interior and exterior surfaces immediately, except for stainless steel enclosures.

4) Surfaces shall be electrostatically coated with a polyester urethane powder or epoxy powder coating.

5) Exterior surfaces shall be ANSI- 61 gray, interior surfaces shall be ANSI-61 gray or gloss white.

6) Equipment mounting sub-panels shall be given a gloss white melamine enamel coating. A Grade 1 finish shall be produced on the finish coat.

Stainless Steel Panels

b. Panels and enclosures located outdoors, in damp or corrosive areas, tunnels or galleries or in any process areas shall be fabricated of type 316 or 304 Stainless Steel per the manufacturers published recommendations for chemical resistance and service.

c. Stainless steel panel finish shall be brushed or satin and shall be free from blemishes and machine marks.

d. All mounting, anchoring and accessory hardware shall be stainless steel.

PVC Coated Panels

e. In hazardous areas, subject to frequent moisture and corrosive elements, panels shall be PVC coated.

f. In areas where the conduit and raceway system, is required to be PVC coated, all panels, control stations and enclosures shall be PVC coated. Colors shall match the conduit system.

g. PVC coating shall be a minimum of 40 Mil. and shall cover all exposed surfaces.

h. All mounting and accessory hardware shall be type 316 stainless.

Panel in Highly Corrosive Areas

i. Unless otherwise noted, in areas designated as highly corrosive or where sodium hypochlorite is handled, pumped, metered or stored, panels and enclosures shall be fabricated of molded fiberglass, fiberglass reinforced polyester, or polycarbonate and recommended for the service.

j. Panels shall be finished smooth or finished with gel coat and epoxy.

k. Glass fiber strands shall be neither exposed nor visible.

l. Panels shall be chemical, sunlight and UV resistant.

1.14 Source Quality Control / Shop Tests

A. Shop Tests

Shop and Testing shall conform to the requirements of Section 40 80 81 – PMCS Factory Testing.

EXECUTION

1.15 Examination / Preparation

A. Not Used.

1.16 Installation

A. The Contractor shall install panels in conformance with NYCEC and the Contract Drawings.

B. All panels and enclosures shall be mounted straight, level and parallel to building surfaces.

C. Wall mounted panels and enclosures shall be securely mounted to walls or columns as required. They shall be spaced a minimum of 3/4" from the structure using strut or plates.

D. Stand mounted panels or stations shall be supported using 6-inch epoxy powder coated steel channel securely mounted to the floor with a minimum of three 1/2" stainless steel bolts and leveling nuts.

Stand bases shall be grouted for added rigidity.

Stands shall be secure and level, shall easily support the mounted equipment and shall hold the equipment rigidly. Multiple stands or fabricated frames shall be used for larger or heavy panels.

E. All freestanding control panels shall be installed on a 6-inch-wide and 4 inch high reinforced concrete curb or 4 inch pad.

Pad shall have 1-inch chamfer on all corners.

Pad shall extend one (1) inch minimum (plus chamfer) past panel exterior.

F. When panels or enclosures are installed on raised computer type floors, additional supports and bracing shall be provided under the floor as required to prevent the floor from being overloaded.

Large and/or heavy panels having any dimension larger than 36 inches or weighing 150 lbs. or more or where the weight of the completed panel exceeds 80% of the specified live load bearing capacity of the flooring, shall be supported from the structural sub floor independently of the raised floor.

Provide a welded steel, adjustable support framework the size of the unit footprint capable of rigidly supporting the weight of the entire panel with a 50% safety factor. The frame shall be installed flush and level with the floor.

Load and bracing calculations shall be submitted for review.

It shall be the responsibility of this Contractor to coordinate raised and finished floor installation requirements with the flooring supplier and installer.

In areas where floor modifications are required, and the floor has already been installed, the contractor shall retain the services of an approved flooring contractor to make the appropriate modifications at no additional cost to the City.

G. Panels, and the equipment enclosed, shall be protected from damage during and after installation. If in the opinion of the Contractor or the Engineer, the area is not suitable for electronic equipment or panels, the equipment shall be removed or protected until the area has been secured.

H. Unless otherwise noted, the Contractor shall install indoor panels on 4-inch concrete pad.

I. Extend concrete pad 4 inches beyond outside dimensions of the base, on all sides.

J. Lay grout after panel sills have been securely fastened down.

K. Unless otherwise noted, install outdoor NEMA 4X panels on a reinforced concrete pedestal:

Minimum thickness shall be 8 inches with No. 4 steel reinforcing bars at 12 inches on centers, each way.

Minimum size shall be 12 inches larger than outer dimensions of base, on all sides.

Lay grout after panel sills have been securely fastened down.

L. The Contractor shall provide excavation and backfill work in conformance with Section 31 23 15 – Excavation and Section 31 23 25 - Fill.

M. The Contractor shall provide concrete work in conformance with Section 03 30 00 – Cast-in-Place Concrete.

N. The Contractor shall install anchor bolts and anchor in accordance with Section 05 05 23 – Metal Fastening.

O. The Contractor shall install and interconnect all equipment, devices, electrical hardware, instrumentation and controls and process controller components into and out of and among the enclosures as indicated on the Contract Drawings.

1.17 Field Testing / Quality Control

A. Field Testing

Field Testing shall conform to the requirements of Section 40 80 82 – PMCS Startup and Field Testing.

1.18 Startup / Demonstration

A. Not Used

1.19 Adjusting / Protection / Cleanup

A. Not Used

END OF SECTION

NO TEXT ON THIS PAGE

40 67 63 UNINTERRUPTIBLE POWER SYSTEMS

GENERAL

1.01 Summary

A. The Contractor shall furnish, test, install and place in satisfactory operation all uninterruptible power systems (UPS), with all spare parts, accessories, and appurtenances as herein specified and as shown on the Drawings.

B. One UPS shall be provided for each operator workstation and its peripherals (i.e. printer, network equipment, radio, etc.) provided under this Contract.

C. One UPS shall be provided for each programmable logic controller (PLC) panel or remote telemetry unit (RTU) and its appurtenant equipment provided under this Contract. However, courtesy receptacles in PLC and RTU cabinets shall not be powered by the UPS.

D. UPS units shall be mounted in or near enclosures containing digital hardware, unless otherwise specified or shown on the Drawings, as follows:

UPS units for operator's consoles shall be mounted within the consoles.

UPS units for control panels containing PLCs shall be mounted either within the cabinet or in an adjacent cabinet of suitable environmental rating.

UPS units for RTUs shall be mounted within the RTU cabinet.

Where the UPS is mounted within a dedicated enclosure, that enclosure shall be properly sized for heat dissipation and all other applicable requirements as specified in Section 40 67 00 – Control System Equipment Panels and Racks and its subordinate Sections.

Where the UPS is mounted within the PLC or RTU cabinet, it shall not interfere with access to other equipment or wiring within the panel (i.e., it shall not be necessary to move or remove the UPS to remove or service other panel-mounted equipment). For floor-mounted PLC cabinets with bottom wiring access (including those cabinets with legs), the UPS shall be placed on a dedicated shelf within the cabinet.

1.02 Payment

A. There is no separate payment provision for this section.

1.03 Related Sections

A. Section 40 61 13 – PMCS General Requirements

B. Section 40 62 00 – Control System Hardware and Ancillaries

C. Section 40 63 43 – Programmable Logic Controllers

D. Section 40 62 16 – Operator Workstation Computers

1.04 References

A. Not Used.

1.05 Description

A. Each UPS shall consist of a freestanding UPS module and battery modules as required to meet backup run time requirements.

B. UPS units shall be true on-line type. Each UPS shall be sized to match the maximum power requirements of the associated digital equipment, control panel power supplies and accessories. Under normal operation, the AC power shall be converted to DC. The DC power from the battery charger shall supply an inverter and maintain the battery module at full charge. The AC output from the inverter shall be fed to the associated digital equipment power supply unit and/or other equipment power supplies as appropriate. Upon loss of the AC supply, the inverter shall continue to supply normal power to the device, drawing DC from the batteries.

C. An automatic bypass switch shall be provided on UPS units of greater than 2 kVA capacity. The transfer switch shall be of the solid state, make-before-break type and shall automatically transfer load from the inverter to the AC line in the event of an inverter malfunction. The total transfer time shall be 5 milliseconds or less. The transfer switch shall be provided with a manual override.

D. A manually operated maintenance bypass switch shall be provided for each UPS installation to allow hardware to be powered while the UPS is removed for maintenance. The bypass switch shall be the make-before-break type to ensure continuous power to the associated PLC.

E. Loss of AC power shall be monitored on the line side of the UPS and reported via normally closed (fail safe) unpowered contacts to the associated PLC/RTU.

F. Each UPS shall meet the following requirements:

Input voltage shall be 117 VAC, single phase, 60 Hz.

Voltage regulation shall be +/-5 percent for line and load changes.

The output frequency shall be phase-locked to the input AC line on AC operation and shall be 60 hertz +/-0.5 percent when on battery operation.

The batteries shall be of the sealed, lead acid or lead calcium gelled electrolyte type, or VRLA absorbed glass mat (AGM) type. The battery modules shall have a minimum full load backup time of 4 hours for PLC-based control panels, and remote telemetry units.

A status monitoring and control panel shall be provided and shall include the following:

a. Status indicating lights for both normal and abnormal conditions.

b. Individual alarm contacts that shall close upon loss of the AC line, low battery level or operation of the static transfer switch. Contacts shall be wired to the closest discrete input subsystem. Alternatively, an RS-232 or USB port shall provide UPS status to an operator workstation. All required interface software and hardware shall be provided.

c. Circuit breaker for the AC input.

Sound absorbing enclosure.

EMI/RF noise filtering.

Surge protection shall be provided on the AC input circuit, which shall have a UL TVSS clamping voltage rating of 400 V with a <5 ns response time.

G. UPS systems shall be the 9PX series by Eaton, Smart-UPS On-line series by APC/Schneider-Electric, or equal.

1.06 Quality Assurance

A. Not used.

1.07 Submittals

A. Not Used

1.08 Delivery, Storage, and Handling

A. Not Used

1.09 Spare Parts, Special Tools, and Supplies

A. Not Used

1.10 Special Warranty Provisions / Guarantee Periods

A. Not Used

PRODUCTS

1.11 Manufacturers

A. Not Used

1.12 Materials / Equipment

A. Not Used

1.13 Fabrication / Assembling / Finishes

A. Not Used

1.14 Source Quality Control / Shop Tests

A. Not Used

EXECUTION

1.15 Examination / Preparation

A. Not Used

1.16 Installation

A. Not Used

1.17 Field Testing / Quality Control

A. Not Used

1.18 Startup / Demonstration

A. Not Used

1.19 Adjusting / Protection / Cleanup

A. Not Used

END OF SECTION

40 70 00 INSTRUMENTATION FOR PROCESS SYSTEMS

GENERAL

1.01 Summary

A. The Contractor shall furnish, install, test and place in operation instruments as scheduled together with all signal converters, transmitters, isolators, amplifiers, etc. to interface with the process control system as shown on the Drawings and as specified. The Contractor may elect to install sensors on process lines provided that the instrument manufacturer provides full on-site supervision during installation. Mounting of associated indicators, sensors, sampling pumps, power supplies, brackets and appurtenances shall be provided as indicated.

B. It is the intent of the Contract Documents that all process taps, isolation valves, nipples, penetrations, embedded instrumentation supports, conduit, wiring, terminations, and the installation of process instrumentation on process lines shall be provided under this Contract. The Contractor shall supervise installation of equipment provided where installation is by other Subcontractors or Contractors.

C. Tapping and connections for primary process sensors shall be sized to suit each individual installation and the requirements of the instrument served. The Contractor shall ensure that the location, supports, orientation and dimensions of the connections and tapping for instruments are such as to provide the proper bracing, the required accuracy of measurement, protection of the sensor from accidental damage and accessibility for maintenance while the facility is in operation. Isolation valves shall be provided at all process taps.

1.02 Payment

A. There is no separate payment provision for this section.

1.03 Related Sections

A. Section 40 61 13 – PMCS General Requirements

B. Section 40 67 00 – Control System Equipment Panels and Racks

C. Section 40 79 00 – Miscellaneous Instruments, Valves, and Fittings

D. Section 40 61 22 – Tools, Supplies, and Spare Parts, General

1.04 References

A. Instruments furnished with mechanical equipment shall be furnished, installed, tested and calibrated as specified elsewhere in the Contract Documents.

1.05 Description

A. All instrumentation supplied shall be the manufacturer's latest design. Unless otherwise specified, instruments shall be solid state, electronic, using enclosures to suit specified environmental conditions. Microprocessor-based equipment shall be supplied unless otherwise specified. All instruments shall be provided with mounting hardware and floor stands, wall brackets, or instrument racks as shown on the Drawings, or as required.

B. Equipment installed in a hazardous area shall meet Class, Group, and Division as shown on the Drawings, to comply with the National Electrical Code.

C. All instruments shall return to accurate measurement without manual resetting upon restoration of power after a power failure.

D. Unless otherwise shown or specified, local indicators shall be provided for all instruments. Where instruments are located in inaccessible locations, local indicators shall be provided and shall be mounted as specified in Subsection 3.01 B herein. All indicator readouts shall be linear in process units. Readouts of 0 100% shall not be acceptable (except for speed and valve position). Isolated outputs shall be provided for all transmitters.

E. Unless otherwise specified, field instrument and power supply enclosures shall be 316 stainless steel, fiberglass (or similar, per Engineer's judgement) or PVC coated copper-free cast aluminum NEMA 4X construction.

F. Where separate elements and transmitters are required, they shall be fully matched, and unless otherwise noted, installed adjacent to the sensor. Special cables or equipment shall be supplied by the associated equipment manufacturer.

G. Electronic equipment shall utilize printed circuitry and shall be coated (tropicalized) to prevent contamination by dust, moisture and fungus. Solid state components shall be conservatively rated for long term performance and dependability over ambient atmosphere fluctuations. Ambient conditions shall be -20 to 50 degrees C and 20 to 100 percent relative humidity, unless otherwise specified. Field mounted equipment and system components shall be designed for installation in dusty, humid, and corrosive service conditions.

H. All non-loop-powered instruments and equipment shall be designed to operate on a 60 Hz AC power source at a nominal 117 V, plus or minus 10 percent, except where specifically noted. All regulators and power supplies required for compliance with the above shall be provided. Where equipment requires voltage regulation, constant voltage transformers shall be supplied.

I. All analog transmitter and controller outputs shall be isolated, 4 to 20 milliamps into a load of 0 to 750 ohms, unless specifically noted otherwise. All switches shall have double pole, double throw contacts rated at a minimum of 600 VA, unless specified otherwise.

J. Analytical Instrumentation

All devices furnished hereunder shall be heavy duty type, designed for continuous industrial service. The system shall contain products of a single manufacturer, insofar as possible, and shall consist of equipment models that are currently in production. All equipment provided, where applicable, shall be of modular construction and shall be capable of field expansion.

All non-loop-powered instruments and equipment shall be designed to operate on a 60 Hz AC power source at a nominal 117 V, plus or minus 10 percent, except where specifically noted. All regulators and power supplies required for compliance with the above shall be provided. Where equipment requires voltage regulation, constant voltage transformers shall be supplied.

All analog transmitter and controller outputs shall be isolated, 4 to 20 milliamps into a load of 0 to 750 ohms, unless specifically noted otherwise. All switches shall have double pole, double throw contacts rated at a minimum of 600 VA, unless specified otherwise.

Each analyzer requiring reagents and/or other replaceable parts shall be furnished with sufficient chemicals and replaceable parts for startup and acceptance tests and the specified warranty period.

Contractor's submittals on these analyzers shall include information on monthly reagent consumption and a list of replaceable parts required for periodic maintenance and the recommended operating periods between replacements. Installation of analyzers and sample preparation shall be in accordance with the analyzer manufacturer's instructions.

Analysis instrumentation performance, accuracy and reproducibility shall be as prescribed in APHA/AWWA/WEF "Standard Methods for the Examination of Water and Wastewater", latest edition. For those measurements specified herein, for which performance characteristics are not listed in the above document, the supplier shall state instrument performance characteristics. The "referee" method shall be as prescribed in EPA Methods for Chemical Analysis of Water and Wastes (1971).

1.06 Quality Assurance

A. Not used.

1.07 Submittals

A. Not Used

1.08 Delivery, Storage, and Handling

A. Not Used

1.09 Spare Parts, Special Tools, and Supplies

A. The Contractor shall furnish and deliver to the Engineer, at that part of the site and at such time as the Engineer may direct, spare parts listed in the table In Section 40 61 22 , Article 1.09, E.

B. Additional items as recommended by the analytical instrument manufacturers or as described for the specified analytical instrument sections shall be provided

1.10 Special Warranty Provisions / Guarantee Periods

A. Not Used

PRODUCTS

1.11 Manufacturers

A. All field instrumentation for outdoor service shall be provided with enclosures that are suitable for outdoor service, as follows:

Where the manufacturer's enclosures are suitable for outdoor service, they shall be provided with instrument sunshades. Sunshades shall be Style E as manufactured by O'Brien Corporation, or equal. Where possible, these instruments shall be mounted in a north facing direction.

Where the manufacturer's standard enclosures are not suitable for outdoor service, instruments shall be mounted in Field Panels in accordance with Section 40 67 00 – Control System Equipment Panels and Racks, or may be furnished with Vipak instrument field enclosures as manufactured by O'Brien Corporation, equivalent by Intertec, or equal. It shall not be necessary to provide the manufacturer's NEMA 4 or 4X enclosures for instruments that will be subsequently mounted in separate field panels

B. All devices furnished hereunder shall be heavy duty type, designed for continuous industrial service. The system shall contain products of a single manufacturer, insofar as possible, and shall consist of equipment models that are currently in production. All equipment provided, where applicable, shall be of modular construction and shall be capable of field expansion.

1.12 Materials / Equipment

A. Materials and equipment used shall be UL approved wherever such approved equipment and materials are available.

1.13 Fabrication / Assembling / Finishes

A. Not Used

1.14 Source Quality Control / Shop Tests

A. Not Used

EXECUTION

1.15 Examination / Preparation

A. Not Used

1.16 Installation

A. General

Equipment shall be located so that it is accessible for operation and maintenance. The Contractor shall examine the Drawings and shop drawings for various items of equipment in order to determine the best arrangement for the work as a whole and shall supervise the installation of process instrumentation supplied under this Division.

Electrical work shall be performed in compliance with all applicable local codes and practices. Where the Contract Documents do not delineate precise installation procedures, API RP550 shall be used as a guide to installation procedures

B. Equipment Mounting and Support

Field equipment shall be wall mounted or mounted on two inch diameter pipe stands welded to a 10 inch square by 1/2 inch thick base plate unless shown adjacent to a wall or otherwise noted. Materials of construction shall be aluminum or 316 stainless steel. Instruments attached directly to concrete shall be spaced out from the mounting surface not less than 1/2 inch by use of phenolic spacers. Expansion anchors in walls shall be used for securing equipment or wall supports to concrete surfaces. Unless otherwise noted, field instruments shall be mounted between 48 and 60 inches above the floor or work platform.

Embedded pipe supports and sleeves shall be Schedule 40, Type 316 stainless steel pipe, ASA B 36.19, with stainless steel blind flange for equipment mounting, unless otherwise indicated.

Materials for miscellaneous mounting brackets and supports shall be Type 316 stainless steel construction.

Pipe stands, miscellaneous mounting brackets and supports shall comply with the requirements of Division 5 of the specifications.

Transmitters shall be oriented such that output indicators are readily visible.

C. Control and Signal Wiring

Electrical, control and signal wiring connections to transmitters and elements mounted on process piping or equipment shall be made through liquid tight flexible conduit. Conduit seals shall be provided where conduits enter all field instrument enclosures and all cabinetry housing electrical or electronic equipment.

1.17 Field Testing / Quality Control

A. Not Used

1.18 Startup / Demonstration

A. Not Used

1.19 Adjusting / Protection / Cleanup

A. The Contractor shall comply with the requirements of Division 1 of these Specifications and all instrumentation and control system tests, inspection, and calibration requirements for all instrumentation and controls provided under this Contract and specified herein. The Engineer, orthe Engineer's designated representative(s), reserves the right to witness any test, inspection, calibration or start up activity. Acceptance by the Engineer of any plan, report or documentation relating to any testing or commissioning activity specified herein shall not relieve the Contractor ofthe responsibility for meeting all specified requirements.

B. The Contractor shall provide the services of factory trained technicians, tools and equipment to field calibrate, test, inspect and adjust each instrument to its specified performance requirement in accordance with manufacturer's specifications and instructions. Any instrument which fails to meet any Contract requirements, or any published manufacturer performance specification for functional and operational parameters, shall be repaired or replaced, at the discretion of the Engineer, at no cost to the CIty. The Contractor shall bear all costs and provide all personnel, equipment and materials necessary to implement all installation tests and inspection activities for equipment specified herein.

C. At least 60 days before the anticipated initiation of installation testing, the Contractor shall submit to the Engineer a detailed description, in duplicate, of the installation tests to be conducted to demonstrate the correct operation of the instrumentation supplied hereunder.

D. Field instrument calibration shall conform to the following requirements:

The Contractor shall provide the services of factory trained instrumentation technicians, tools and equipment to field calibrate or verify factory calibration of each instrument supplied under this Contract and existing instruments shown to its specified accuracy in accordance with the manufacturer's specification and instructions for calibration. Calibration and verification shall take place under actual process conditions. Forcing outputs shall not be acceptable.

Each instrument shall be calibrated/verified at 0, 25, 50, 75 and 100 percent of span using test instruments to simulate inputs and read outputs. Test instruments shall be rated to an accuracy of at least five (5) times greater than the specified accuracy of the instrument being calibrated. Where applicable, such test instruments shall have accuracy's as set forth by the National Institute for Standards and Technology (NIST).

The Contractor shall provide a written calibration/verification sheet to the Engineer for each instrument, certifying that it has been calibrated to its published specified accuracy. The Contractor shall submit proposed calibration sheets for various types of instruments for Engineer approval prior to the start of calibration. This sheet shall include but not be limited to date, instrument tag numbers, brief description of how the calibration process was performed, calibration data for the various procedures described herein, name of person performing the calibration, a listing of the published specified accuracy, permissible tolerance at each point of calibration, calibration reading as finally adjusted within tolerance, defect noted, corrective action required and corrections made. For electronic or powered instruments, the calibration/verification sheet shall also list all configurable parameters that have been modified from their default factory setting.

If doubt exists as to the correct method for calibrating or checking the calibration/verification of an instrument, the manufacturer's printed recommendations shall be used as an acceptable standard, subject to the approval of the Engineer.

Upon completion of calibration, devices calibrated hereunder shall not be subjected to adjustments, sudden movements, accelerations, or shocks, and shall be installed in permanent protected positions not subject to moisture, dirt, and excessive temperature variations. Caution shall be exercised to prevent such devices from being subjected to over-voltages, incorrect voltages, overpressure or incorrect air. Damaged equipment shall be replaced and re-calibrated/verified at no cost to the City. Equipment that has been adjusted, modified, or moved or there is evidence of such activity shall be re-calibrated/verified at no cost to the City.

After completion of instrumentation installation, the Contractor shall perform a loop check. The Contractor shall submit final loop test results with all instruments listed in the loop. Loop test results shall be signed by all representatives involved for each loop test

END OF SECTION

NO TEXT ON THIS PAGE

40 71 79.14 FLOW SWITCHES (THERMAL)

GENERAL

1.01 SUMMARY

A. The Contractor shall furnish, test, install and place in satisfactory operation all thermal type flow switches, with all spare parts, accessories, and appurtenances as herein specified and as shown on the Drawings.

1.02 RELATED SECTIONS

A. Section 40 61 13 – PMCS General Requirements

B. Section 40 70 00 – Instrumentation for Process Systems

PRODUCTS

1.03 THERMAL TYPE FLOW SWITCHES

A. Thermal type flow switches shall consist of a solid state switch assembly that utilizes temperature drop or the change in current required to maintain a constant temperature to detect flow rate. The transmitter shall interpret this data and actuate the switch at the specified setpoint.

B. Flow switches shall have the following specifications:

Max. Process Temperature: 170 degrees C

Max. Operating Pressure: 250 psig

Power supply: 120VAC, unless otherwise shown or specified

Switch Rating: 3 A at 120 VAC;

Body Type/Material: Single piece unless otherwise recommended by Manufacturer

Enclosure Classification: NEMA 4X

Wetted parts: Type 316 stainless steel, unless otherwise shown or specified

Process Connection: Compression fitting with metal ferrule for NPT tap.

C. Instrument shall be rated for the space according to the designated area classification on the Contract Drawings.

D. All accessories, adapters, cables, and other required parts shall be provided to adapt flow switch to required line size and to make electrical connections as required for a completely operational flow switch.

E. Thermal type flow switch shall be the FLT93 series by Fluid Components International, or equal.

EXECUTION

1.04 REQUIREMENTS

A. Refer to Section 40 70 00 – Instrumentation for Process Systems.

END OF SECTION

40 73 13 PRESSURE AND DIFFERENTIAL PRESSURE GAUGES

GENERAL

1.01 Summary

A. The Contractor shall furnish, test, install and place in satisfactory operation the pressure gauges, with all spare parts, accessories, and appurtenances as herein specified and as shown on the Drawings.

1.02 Payment

A. There is no separate payment provision for this Section.

1.03 Related Sections

A. Section 40 61 13 – PMCS General Requirements

B. Section 40 70 00 – Instrumentation for Process Systems

C. Section 40 79 00 – Instrumentation Accessories

1.04 References

A. Abbreviations and Acronyms:

B. Definitions:

C. Reference Standards:

ASNE B40.1 “Gauges, Pressure, Indicating Dial Type – Elastic Element”

1.05 Description

A. All gauges shall be direct reading type. Snubbers shall be provided on all gauges. Gauge full-scale pressure range shall be selected such that the maximum operating pressure shall not exceed approximately 75% of the full-scale range.

1.06 Quality Assurance

A. Performance Requirements:

Grades of accuracy shall conform to the requirement of ANSI/ASME B40.1.

a. Pressure, vacuum, and compound gages shall have an accuracy meeting Grade '2A' standards, with an error not exceeding 0.5 % of full scale range.

b. Diaphragm protected gages shall have a combined accuracy (gage and seal) of Grade 'A' standards, with an error not exceeding 1% of scale range between 25% and 75% of scale and 2%for the remainder of the scale.

Each gage will require that laboratory tests be certified by an independent testing agency as to accuracy.

1.07 Submittals

A. Submittals shall comply with the requirements of the Contract Documents. In addition, submittals shall include, but not be limited to:

Action Submittals:

a. Catalogs, drawings, and reference materials.

b. Maintenance manuals.

c. Chemical compatibility for gauges with wetted surfaces in contact with chemical solutions or gasses other than air.

Information Submittals:

d. Independent testing agency certification indicating that the gages provided meet the specified accuracy requirements.

1.08 Delivery, Storage, and Handling

A. The Contractor shall deliver materials provided under this Section in accordance with the requirements of the Contract Documents.

B. The Contractor shall store and handle materials provided under this Section in accordance with the requirements of the Contract Documents.

1.09 Spare Parts, Special Tools, and Supplies

A. The Contractor shall furnish and deliver to the Engineer, at that part of the site and at such time as the Engineer may direct, spare parts listed in the table In Section 40 61 22 , Article 1.09, E. Those parts include

1. For gages other than diaphragm protected gages, provide 20% spare gages (with a minimum of one) of each range used.

2. For diaphragm protected gages, provide 20% percent spare gages (with a minimum of one) of each range used, complete with diaphragm seals, filled and ready for use.

1.10 Special Warranty Provisions / Guarantee Periods

A. Not Used

PRODUCTS

1.11 Manufacturers

A. Gauges:

Pressure and vacuum gauges shall be Ashcroft Duragauge Model 1279, Ametek-U.S. Gauge Division, H.O. Trerice Co., WIKA Instrument Corporation, or equal.

1.12 Materials / Equipment

A. Gauge features:

Mounting: ½” NPT, lower stem mount type

Accuracy: 0.5% full scale

Case: Solid front, black phenolic material

Dial: White background and black letters

Glass: Shatterproof

Blow-out protection: Back

Pressure element: stainless steel bourdon tube

Movement: Stainless steel, Teflon coated pinion gear and segment

Gaskets: Buna-N

B. Liquid-filled or equivalent mechanically-damped gauges shall be used if the gauges are installed with pumps, or where gauges are subjected to vibrations or pulsation. Filling fluid shall be silicone unless oxidizing agents such as sodium hypochlorite are present, where halocarbon shall be used.

C. Gauge size shall be 4-1/2".

D. Diaphragm seals and isolating ring seals shall be furnished in accordance with the requirements specified under Section 40 79 00 – Miscellaneous Instruments, Valves, and Fittings.

E. The complete gauge assembly and appurtenances shall be fully assembled and tested prior to field mounting. A ½” isolation stainless steel ball valve shall be provided for each gauge assembly.

1.13 Fabrication / Assembling / Finishes

A. Not Used

1.14 Source Quality Control / Shop Tests

A. Not Used

EXECUTION

1.15 Examination / Preparation

A. Not Used

1.16 Installation

A. Locations:

Gauges shall be provided where shown on the Contract Drawings, specified, and/or as required for a complete installation.

Location and orientation of the gauges shall be coordinated with the actual piping and equipment installations so that gauges and indicators shall be easily read during operation, and easily accessed for maintenance by City personnel.

Where field mounting and orientation conflicts arise due to incomplete coordination with field changes in the process piping and equipment installation, assemblies shall be relocated, re-oriented, re-assembled and recalibrated as directed by Engineer.

1.17 Field Testing / Quality Control

A. Not Used

1.18 Startup / Demonstration

A. Not Used

1.19 Adjusting / Protection / Cleanup

A. Not Used

END OF SECTION

40 73 20 PRESSURE TRANSMITTERS

GENERAL

1.01 Summary

A. The Contractor shall furnish, test, install and place in satisfactory operation the pressure indicating transmitters, with all spare parts, accessories, and appurtenances as herein specified and as shown on the Drawings.

1.02 Payment

A. There is no separate payment provision for this section.

1.03 Related Sections

A. Section 40 61 13 – PMCS General Requirements

B. Section 40 70 00 – Instrumentation for Process Systems

1.04 References

A. Not Used.

1.05 Description

A. Not Used

1.06 Quality Assurance

A. Not Used

1.07 Submittals

A. Not Used

1.08 Delivery, Storage, and Handling

A. Not Used

1.09 Spare Parts, Special Tools, and Supplies

A. Not Used

1.10 Special Warranty Provisions / Guarantee Periods

A. Not Used

PRODUCTS

1.11 Manufacturers

A. GAUGE PRESSURE INDICATING TRANSMITTERS

Gauge pressure transmitters shall be of the capacitance type with a process-isolated diaphragm with silicone oil fill, microprocessor-based "smart" electronics, and a field adjustable rangeability of 100:1 input range. Span and zero shall be continuously adjustable externally over the entire range. Span and zero adjustments shall be capable of being disabled internally. Transmitters shall

be NEMA 4X weatherproof and corrosion resistant construction with low-copper aluminum body and 316 stainless steel process wetted parts. Accuracy, including nonlinearity, hysteresis and repeatability errors shall be plus or minus 0.025 percent of calibrated span, zero based. The maximum zero elevation and maximum zero suppression shall be adjustable to anywhere within sensor limits. Output shall be linear isolated 4-20 milliamperes 24 VDC. Power supply shall be 24 VDC, two-wire design. Each transmitter shall be furnished with a 4-digit LCD indicator capable of displaying engineering units and/or milliamps and mounting hardware as required. Overload capacity shall be rated at a minimum of 25 MPa. Environmental limits shall be -40 to 85 degrees Celsius at 0-100% relative humidity. Each transmitter shall have a stainless steel tag with calibration data attached to body.

The piezoresistive silicon pressure sensor shall be mechanically, electrically, and thermally isolated from the process and the environment, shall include an integral temperature compensation sensor, and shall provide a digital signal to the transmitter's electronics for further processing. Factory set correction coefficients shall be stored in the sensor's non-volatile memory for correction and linearization of the sensor output in the electronics section. The electronics section shall correct the digital signal from the sensor and convert it into a 4-20 mA analog signal for transmission to receiving devices. The electronics section shall contain configuration parameters and diagnostic data in non-volatile EEPROM memory and shall be capable of communicating, via a digital signal superimposed on the 4-20 mA output signal, with a remote interface device. Output signal damping shall be provided, with an adjustable time constant of 0-36 seconds. Total long term stability (frequency of calibration) shall be not less than 0.20% URL for 15 years.

Where scheduled, gauge pressure indicating transmitters shall be calibrated in feet of liquid for liquid level service.

Gauge pressure indicating transmitters shall be Model 3051S1TG as manufactured by Emerson Process Management (Rosemount), or equal.

B. DIFFERENTIAL PRESSURE INDICATING TRANSMITTERS

Differential pressure indicating transmitters shall be the same as the gauge pressure transmitters except for body specifications. Differential pressure units shall be furnished with close coupled stainless steel three valve manifold assembly.

The electronics sections of differential pressure transmitters shall contain user-selectable square root extractors to provide a linear 4-20 mA DC output proportional to flow, when activated. Square root extractor circuitry shall be activated only for incompressible fluid flow applications (i.e., water). Flow rates for compressible fluids (i.e., air) shall be calculated externally using line temperature and static pressure corrections as specified elsewhere in this Division. In addition, each flow transmitter shall be furnished with laminated flow versus differential pressure curves wall mounted adjacent to the transmitter.

Differential pressure indicating transmitters shall be Model 3051S1CG as manufactured by Emerson Process Management (Rosemount), or equal.

C. FLANGE MOUNTED LEVEL INDICATING TRANSMITTERS

Flange-mounted tank liquid level indicating transmitters shall be the same as gauge pressure transmitters except for body type.

The flange-mounted sensor shall consist of a special non-corrosive isolating diaphragm with fill fluid in a sealed capillary system to transmit liquid pressure to the sensing element. A second isolating diaphragm shall transmit pressure through the fill fluid to the sensing diaphragm in the center of the capacitance cell. An isolating diaphragm and fluid fill shall also be provided on the opposite side of the sensing diaphragm to convey atmospheric or reference pressure.

All mounting flanges, diaphragms, O-rings and materials used in construction shall be non-corroding, compatible with each other, and compatible with the liquid being measured.

Flange-mounted liquid level transmitters shall be Model 3051S Level Transmitter as manufactured by Emerson Process Management (Rosemount), or equal.

1.12 Materials / Equipment

A. Not Used

1.13 Fabrication / Assembling / Finishes

A. Not Used

1.14 Source Quality Control / Shop Tests

A. Not Used

EXECUTION

1.15 Examination / Preparation

A. Not Used

1.16 Installation

A. Not Used

1.17 Field Testing / Quality Control

A. Not Used

1.18 Startup / Demonstration

A. Not Used

1.19 Adjusting / Protection / Cleanup

A. Not Used

END OF SECTION

NO MORE TEXT ON THIS PAGE

SECTION 40 78 56 – ISOLATORS, INTRINSICALLY SAFE BARRIERS, AND SURGE SUPPRESSORS

SPECIAL WORKS – IG/PC

---

40 78 56 ISOLATORS, INTRINSICALLY SAFE BARRIERS, AND SURGE SUPPRESSORS

GENERAL

1.01 Summary

A. The Contractor shall furnish, install, and place in satisfactory operation the isolators, intrinsically-safe barriers, and surge protection devices (SPDs) as specified herein and as shown on the Drawings.

1.02 Payment

A. There is no separate payment provision for this section.

1.03 Related Sections

A. Section 40 61 13 – PMCS General Requirements

B. Section 40 62 00 – Control and Information System Hardware, General

C. Section 40 67 00 – Control System Equipment Panels and Racks

D. Section 40 78 00 – Panel Mounted Instruments

1.04 References

A. Not Used

1.05 Description

A. Not Used

1.06 Quality Assurance

A. Not used.

1.07 Submittals

A. Not Used

1.08 Delivery, Storage, and Handling

A. Not Used

1.09 Spare Parts, Special Tools, and Supplies

A. The Contractor shall furnish and deliver to the Engineer, at that part of the site and at such time as the Engineer may direct, spare parts listed in the table In Section 40 61 22 , Article 1.09, E. Those parts include

1. One of each type of surge protection device provided under this Contract

1.10 Special Warranty Provisions / Guarantee Periods

A. Not Used

PRODUCTS

1.11 Manufacturers

A. SURGE PROTECTION

General

a. All electrical and electronic elements shall be protected against damage due to electrical transients induced in interconnecting lines from lightning discharges and nearby electrical systems.

b. Manufacturer's Requirements: All surge protection devices shall be manufactured by a company that has been engaged in the design, development, and manufacture of such devices for at least 5 years. Acceptable manufacturers shall be Phoenix Contact, Edco, Transtector, Weidmuller, or equal.

c. Surge protection device installations shall comply with UL 94, the National Electric Code (NEC), and all applicable local codes.

d. Surge protection devices shall be installed as close to the equipment to be protected as practically possible.

e. Device Locations: As a minimum, provide surge protection devices at the following locations:

1) At connections between AC power and electrical/electronic equipment, including, but not limited to, panels, assemblies, and field mounted analog transmitters.

2) At both ends of analog signal circuits that have any portion of the circuit extending outside of a building.

3) At both ends of copper-based communication cables which extend outside of a building, including at field instruments and the field side of analog valve position signals.

4) On all external telephone communication lines.

AC power protection

f. Surge protection device assemblies for connections to AC power supply circuits shall:

1) Be provided with two 3-terminal barrier terminal strips capable of accepting No. 12 AWG solids or stranded copper wire. One terminal strip shall be located on each end of the unit.

2) Have a nonflammable enclosure that meets or exceeds UL 94 V0 flammability requirements. The surge protection device shall be provided with provisions for mounting to interior of equipment racks, cabinets, or to the exterior of freestanding equipment.

3) Be constructed as multistage devices consisting of gas tube arrestors, high energy metal oxide varistors, or silicon avalanche suppression diodes. Assemblies shall automatically recover from surge events and shall have status indication lights.

4) Comply with all requirements of UL 1449, latest edition.

5) Be able to withstand a peak surge current of 10,000 amps based on a test surge waveform with an 8-microsecond rise time and a 20-microsecond exponential decay time, as defined in UL 1449.

6) Have the following characteristics:

a) Maximum Continuous Operating Voltage: 150VAC

b) Maximum Operating Current: 20 amps

c) Ambient Temperature Range: -20 degrees C to +65 degrees C

d) Response Time: 5 nanoseconds

Analog signal circuit protection

g. Surge protection device assemblies for analog signal circuits shall:

1) Have four lead devices with DIN Rail mounting.

2) Have a nonflammable enclosure that meets or exceeds UL 94 V0 flammability requirements.

3) Be constructed as multistage devices consisting of gas tube arrestors and silicon avalanche suppression diodes. Gas tube arrestors and diodes shall be separated by a series impedance of no more than 20 ohms. Assemblies shall automatically recover from surge events.

4) Comply with all requirements of UL 497B.

5) Be able to withstand a peak surge current of 10,000 amps based on a test surge waveform with an 8-microsecond rise time and a 20-microsecond exponential decay time, as defined in UL 1449.

6) Limit line-to-line voltage to 40 volts on 24VDC circuits.

7) Have the following characteristics:

a) Maximum Continuous Operating Voltage: 28VDC

b) Ambient Temperature Range: -20 degrees C to +65 degrees C

c) Response Time (Line-to-Line): 5 ns

Communication circuit protection

h. Surge protection devices for copper-based data communication circuits shall:

1) Be designed for the specific data communication media and protocol to be protected (e.g., telephone, serial, parallel, network, data highway, coax, twinaxial, twisted pair, RF).

2) Provide protection of equipment to within the equipment's surge withstand levels for applicable standard test wave forms of the following standards:

a) IEC 60-1 / DIN VDE 0432 part 2

b) CCITT K17 / DIN VDE 0845 part 2

c) IEEE C62.31

3) Have a nonflammable enclosure that meets or exceeds UL 94 V0 flammability requirements.

4) Provide automatic recovery.

B. Intrinsically safe barriers and relays

Intrinsically safe relays and barriers shall be provided where required to interface with equipment located in Classified (i.e., hazardous) areas.

Intrinsically safe relays and barriers shall be FM approved.

Manufacturer shall be

a. Pepperl+Fuchs

b. Crouse Hinds

c. Square D

d. Or equal.

C. Isolators and converters

Signal converters shall be provided as required to provide control functions and to interface instrumentation and controls, equipment panels, motor control centers and other instrumentation and controls supplied under other Divisions to the controls provided herein.

General Requirements

a. Converters shall be of the miniature type, utilizing all solid-state circuitry suitable for mounting within new or existing cabinetry. Where sufficient cabinet space is not available, sub panels or supplemental enclosures shall be provided.

b. Power supply shall be 120V, 60 hertz where required by the converter, unless otherwise indicated.

c. Repeatability shall be 0.1% of span, deadband shall be 0.1% span, maximum.

d. Where specific converters are not listed, but are required to interface with the process control system, they shall comply with the general requirements stated herein.

Current to Current (I/I) Isolators

e. Current to current isolators shall be furnished where necessary to provide an isolated current loop, calculations or signal amplification between the process control system and instrumentation and control loops. Isolators shall be sized such that resistance of existing loops shall not exceed maximum rated resistance.

f. Isolators shall be as manufactured by AGM, Moore Industries, Rochester Instrument Systems (RIS), Phoenix Contact, Weidmuller, Acromag, or equal.

Voltage to Current (E/I) Transducers

g. Voltage to current (or current to voltage) transducers shall convert a voltage signal of one magnitude to a 4 20 milliamp DC current signal. The output current shall be directly proportional to the input signal voltage. Transducers shall be sized such that loop resistance does not exceed maximum rated resistance.

h. Transducers shall be as manufactured by AGM, Moore Industries, Rochester Instrument Systems (RIS), Phoenix Contact, Weidmuller, Acromag, or equal.

Frequency to Current (F/I) Transducers

i. Frequency to current transducers shall convert pulse rate and pulse duration signals to 4 20 mA, 24 VDC analog signals. Converters shall include field adjustable input frequency range. Converter power shall be 120 VAC, 60 hertz. Transducers shall be sized such that loop resistance does not exceed maximum rated resistance. Transducers shall be suitable for signal transmission via leased telephone lines.

j. Transducers shall be Series 5100 as manufactured by AGM, or equivalent by Moore Industries, Rochester Instrument Systems (RIS), Phoenix Contact, Weidmuller, Acromag, or equal.

Current to Frequency (I/F) Transducers

k. Current to frequency transducers shall convert 4 20 mA, 24 VDC analog signals to pulse rate and pulse duration signals. Converters shall include field adjustable output frequency range. Converter power shall be 120 VAC, 60 hertz. Transducers shall be sized such that loop resistance does not exceed maximum rated resistance. Transducers shall be suitable for signal transmission via leased telephone lines.

l. Transducers shall be Series 5016 as manufactured by AGM, Moore Industries, Rochester Instrument Systems (RIS), Phoenix Contact, Weidmuller, Acromag, or equal.

Integrators

m. Integrators shall be provided as interchangeable plug in modules with zero and span adjustment available on the front plate of the units. Output shall range from 0 to 0.1 through 0 to 10 pulses per second. Accuracy shall be + 0.1% of input span. Integrators shall convert linear analog signals to pulse rate and provide a solid state output.

n. Integrators shall be as manufactured by AGM Electronics, Moore Industries, Rochester Instrument Systems (RIS), Phoenix Contact, Weidmuller, Acromag, or equal.

Electronic Switches (Alarm Relays)

o. Electronic switches shall be furnished with a calibrated dial for adjusting set points. The input to the switch shall be 4 - 20 mA DC, and the set point shall be adjustable over the full range. Unless otherwise noted, the dead band shall be fixed at less than 2% of span. The set point stability shall be +0.1% per degree F. The repeatability shall be +0.1% of span. The units shall be furnished with SPDT relays rated at 10 amperes at 115 VAC.

p. Electronic switches shall be as manufactured by AGM, Moore Industries, Rochester Instrument Systems (RIS), Phoenix Contact, Weidmuller, Acromag, or equal.

RTD to Current Signal Converters

q. RTD to current signal converters shall convert a 3-wire RTD input signal to an isolated 4 20 mADC output signal. Accuracy shall be 0.10% of span or better. Calibrated span of each converter shall be as indicated on the instrument list. The Contractor shall coordinate calibration of the signal converters with existing RTD elements.

r. Signal converters shall be as manufactured by AGM, Moore Industries, Rochester Instrument Systems (RIS), Phoenix Contact, Weidmuller, Acromag, or equal.

1.12 Materials / Equipment

A. Not Used

1.13 Fabrication / Assembling / Finishes

A. Not Used

1.14 Source Quality Control / Shop Tests

A. Not Used

SECTION 40 78 56 – ISOLATORS, INTRINSICALLY SAFE BARRIERS, AND SURGE SUPPRESSORS

SPECIAL WORKS – IG/PC

EXECUTION

1.15 Examination / Preparation

A. See Section 40 78 00 – Panel Instruments and Accessories, for additional requirements.

1.16 Installation

A. Not Used

1.17 Field Testing / Quality Control

A. Not Used

1.18 Startup / Demonstration

A. Not Used

1.19 Adjusting / Protection / Cleanup

A. Not Used

END OF SECTION

NO TEXT ON THIS PAGE

40 78 90 PMCS PANEL MOUNTED INSTRUMENTS AND DEVICES

GENERAL

1.01 Summary

A. The Contractor shall provide all labor, materials, equipment and incidentals as shown, specified, and required to furnish, install calibrate, test, startup, and place into satisfactory operation PMCS Panel Mounted Instruments and Devices as described herein and as indicated on the Contract Drawings.

B. The provision of this Section apply to instruments and devices provided as a part of packaged systems specified elsewhere in this Contract including but not limited to, function, quality, spare parts, tools, testing, training, documentation and installation.

1.02 Payment

A. There is no separate payment provision for this Section.

1.03 Related Sections

A. All Common Works Specifications sections (Division 01) apply to this Section.

B. Requirements from the following sections also apply to this Section:

Section 40 61 13 – PMCS General Requirements.

Section 40 67 16 – PMCS Panels and Enclosures

1.04 References

A. Definitions

Section 40 61 13 – PMCS General Requirements defines the terms and abbreviations used in this Section and the PMCS.

PMID - Panel Mounted Instruments and Devices.

B. Reference Standards

Section 40 61 13 – PMCS General Requirements lists the standards applicable to this Section and the PMCS.

1.05 Description

A. PMIDs and controls shall be provided with all associated services and appurtenant equipment.

B. The Contract Drawings and Specifications illustrate and specify general functional, environmental and construction requirements of PMIDs, and do not necessarily show or specify all components, wiring, piping and accessories required by specific manufacturers, to provide a completely integrated system.

C. The Contractor shall provide all additional components, piping, wiring, accessories, services, labor, etc. required to furnish and install PMIDs and accessories to provide a complete and properly functioning integrated system.

D. The Contractor shall:

Provide all labor, materials, equipment and incidentals as shown, specified and required to furnish, install, calibrate, test, adjust and place into satisfactory operation, all PMIDs specified or required under this Section.

Retain the services of each equipment manufacturer to properly select, apply, size and locate each PMID they are to provide.

Also, the manufacturer's services shall be provided to setup, commission and fine tune all instruments provided.

Provide application and design engineering services to properly select, apply, and install; provide detailed design, location, and mounting drawings and to test, calibrate and commission, PMIDs provided herein.

Coordinate the installation of all items specified herein and required to ensure the complete and proper operation and interfacing of all the components and systems.

1.06 Quality Assurance

A. The Contractor shall comply with the Quality Assurance requirements listed in Section 40 61 13 – PMCS General Requirements, this Section and the Specifications.

B. All materials and equipment furnished shall be new, free from defects, and of first quality, produced by manufacturers who have been regularly engaged in the manufacture of PMIDs.

C. Manufacturers shall have produced PMIDs for a minimum of twenty (20) years

D. Where there is more than one item of similar equipment required under the Contract, all such similar equipment shall be the product of one manufacturer.

E. All material furnished under this Contract shall be determined safe by UL and all material shall be labeled, certified, or listed by the testing agency.

F. Custom made equipment or related installation which are constructed specially for this Contract will not be acceptable.

G. Equipment furnished within this Contract shall be standard products furnished by a supplier regularly engaged in the manufacture of such products.

1.07 Submittals

A. The Contractor shall comply with submittal requirements listed in Section 40 61 13 – PMCS General Requirements, this Section and the Specifications.

B. Contractor shall submit PMIDs and schedules for the approval of the Engineer.

C. The Contractor is solely responsible for the timing of PMID submittals to enable approval by the Engineer and subsequent use by the PMCS Supplier.

D. The Contractor shall create, maintain and submit for review, an updated index of PMIDs.

E. Submittals shall be made at least 90 days in advance of any proposed use by the PMCS Supplier.

F. The manufacturer's calculations, assumptions and application details, and recommendations shall be submitted to the Engineer for review and approval.

1.08 Delivery, Storage, and Handling

A. The Contractor shall comply with delivery, storage and handling requirements listed in Section 40 61 13 – PMCS General Requirements.

1.09 Spare Parts, Special Tools, and Supplies

A. The Contractor shall furnish and deliver to the Engineer, at that part of the site and at such time as the Engineer may direct, spare parts listed in the table In Section 40 61 22 , Article 1.09, E. Those parts include

(1) One PMID for every five (5) PMID of a given model furnished, minimum of one.

(2) One (1) communication card for every five (5) of each type furnished, minimum of one.

(3) One (1) power supply for every (5) of each size furnished, minimum of one.

(4) All spare parts recommended by manufacturer and listed as recommended spare parts in the manufacturer's submitted O&M Manual.

1.10 Special Warranty Provisions / Guarantee Periods

A. Not Used

PRODUCTS

1.11 Manufacturers

A. Shut-off valves shall be as manufactured by:

Swagelok Company, Solon, OH;

Anderson Greenwood-Emerson, Anaheim, CA;

Tylok, Euclid, OH;

Or Approved equal.

B. Manifolds shall be as manufactured by:

Swagelok Company, Solon, OH;

Anderson Greenwood-Emerson, Anaheim, CA;

Tylok, Euclid, OH;

Or Approved equal.

C. Removable Connections and End Connections shall be as manufactured by:

Swagelok Company, Solon, OH;

Tylok, Euclid, OH;

Or Approved equal.

D. Pressure Guages shall be as manufactured by:

Weiss, Holtsville, NY;

Ametek/U.S. Gauge, Feasterville-Tervose, PA;
Ashcroft, Stratford, CT;
Or Approved equal.

E. Pressure switches shall be as manufactured by:

Asco Emerson, Florham Park, NJ;
Barksdale, Los Angeles, CA;
Ashcroft, Stratford, CT;
Or Approved equal.

F. Process Isolation Diaphragm Seals shall be as manufactured by:

Mansfield & Green;
Helicoid;
Ashcroft, Stratford, CT;
Red Valve, Carnegie, PA;
Or Approved equal.

G. Signal Loop Isolators shall be as manufactured by:

Moore Industries, North Hill, CA;
Acromag Inc., Wixom, MI;
Or Approved equal.

H. Loop Power Supplies shall be as manufactured by:

Acopian, Easton, PA;
Acromag Inc., Wixom, MI;
Or Approved equal.

I. Signal Splitters shall be as manufactured by:

Moore Industries, North Hill, CA;
Or Approved equal.

J. Signal Adders shall be as manufactured by:

Moore Industries, North Hill, CA;
Or Approved equal.

K. Control Relay shall be as manufactured by:

IDEC, East Dundee, IL;
Square D, Andover, MA;
Allen-Bradley, Milwaukee, WI;
Eaton, New York, NY;

Or Approved equal.

L. Control panel Pilot Devices shall be as manufactured by:

Eaton, New York, NY;

Allen-Bradley, Milwaukee, WI;

Square D, Andover, MA;

Or Approved equal.

M. Differential Pressure Switches shall be as manufactured by:

Sor, Lenexa, KS;

Ashcroft, Stratford, CT;

Mercoid, Michigan City, IN;

or approved equal.

1.12 Materials / Equipment

A. Pressure Sensing Lines and Accessories for Flow and Pressure Transmitters

Construction:

a. Material: Type 316 stainless steel tubing; .035-inch wall thickness.

b. Pressure Rating: 150 psi.

c. Size: 1/2-inch outside diameter.

d. Connections: Type 316 stainless steel compression type. "Swagelok," provide isolation valves at process tap

B. Shut-off and Isolation Valves:

Construction:

a. Type: Ball.

b. Pressure Rating: 150 psi.

c. Body, Ball, and Stem: Type 316 stainless steel.

d. Packing: High Density TFE.

e. Handle Stainless Steel with metal travel stops.

f. Support Rings: Stainless steel.

g. End Connections: 1/2 inch NPTF (minimum) w/ Removable "Swagelok" connectors.

C. Manifolds:

Construction:

a. Type: 5-valve and 3-valve meter manifolds.

b. Materials: Type 316 stainless steel body, bonnets, stems, and hardware; Delrin seats; Teflon packing.

c. Connections: 1/2 inch NPTF with Type 316 stainless steel compression type. "Swagelok" connectors.

D. Pressure tap sensing lines and accessories for pressure gages and pressure switches:

Construction for Process Sensing Taps in Ductile Iron, Steel and Stainless Steel Piping Systems "Clean Service"(potable water, service water, and effluent):

a. Material and Fittings: Type 304 stainless steel pipe (ASTM A 312) and threaded fittings and adapters (ASTM A 403) in accordance with Section 32.

b. Sizes: 1-inch minimum for main sensing piping and 1/2-inch gage and switch connections.

c. Pressure Rating: Equal to or greater than the applicable system test pressure, or as specified.

d. For applications not requiring diaphragm seals, provide separate 1/2-inch Type 316 stainless steel threaded ball valves for each gage and switch.

e. For applications requiring diaphragm seals, provide a separate 1-inch Type 316 stainless steel threaded ball valve for seal process side shutoff for each gage and switch. Ball valves shall be provided as specified herein.

Construction for process sensing taps in copper and other nonferrous piping systems:

f. Pipe Material and Fittings: Use the same type of pipe material and fittings as those used in the process piping system. Copper pipe and fittings shall be provided in accordance with the requirements of Section 32A. PVC and CPVC pipe and fittings shall be provided in accordance with the requirements of Section 32B.

g. Sizes: 1/2-inch minimum for main process sensing piping and 1/2-inch for gage and switch connections.

h. Pressure Rating: Equal to or greater than the applicable system test pressure.

i. For copper piping system taps, with or without seals, provide a separate 1/4-inch minimum threaded brass or bronze gage cock for each gage and switch.

j. For PVC and CPVC piping systems with or without diaphragm seals, provide a separate 1/2-inch threaded ball valve for process sensing line shutoff for each gage and switch. Ball valves shall be provided in accordance with the Specifications in Section 34.

Construction for Process Sensing Taps in Ductile Iron, Steel and Stainless Steel Piping Systems "Dirty Service" (Raw Wastewater, Sludge, Scum,-):

k. Pipe Material and Fittings: Brass

l. Size: 1 1/2-inch minimum for pipes and fittings; 1/2-inch minimum to gage and switch. Cleanout and flushing connections shall be provided on all connections.

m. Pressure Rating: Equal to or greater than the applicable system test pressure, or as specified.

n. Applications requiring diaphragm seals provide separate one 1/2-inch eccentric plug valves.

E. Level Switch Float Type

Design:

a. Type: Direct acting, pear shaped, eccentrically weighted displacement type, liquid level sensor.

b. Float Body: Hollow hermetically sealed, rigidly molded of polypropylene containing switch and eccentric metal weight.

c. Switch: Hermetically Sealed SPDT switch rated 8 Amps AC, 5 Amps DC, cushioned and mounted along the main axis at about 65-degree inclination. No mercury permitted.

d. For multiple floats provide 316 stainless steel mounting rod and all required mounting hardware per manufacturer's recommendation.

e. Weight: Weight to cause the sensor to hang straight down from cable when not immersed and only allow the float to pivot when immersed in liquid.

f. Electrical Cable:

1) Heavy duty, three conductors, flexible and submersible cable, sheathed in PVC and connected to float and switch with a watertight seal.

2) Cable length shall be sufficient to extend to the control panel box.

F. Level Transmitter Ultrasonic Type

Type

a. Non-contact, ultrasonic level transducer.

b. Function/Performance

1) Measuring Range: Transducer range shall be suitable for the installation indicated on the Drawings, up to 50 ft. (15m).

2) Temperature Range: –20 to 60 degrees C.

3) Relative Humidity: Zero to 100 percent.

4) Temperature Compensation: Transducers shall be provided with integral temperature sensors for temperature compensation at temperature ranges from -50° to 150° C.

Physical

c. Transducers shall be potted/encapsulated in a Kynar or other chemical and corrosion-resistant housing. Where indicated on the Drawings, transducers shall be approved for installation in Class I, Division 1, Groups C and D (Zone 0) environments.

d. The surface of transducers shall be Teflon-coated where mounted on chemical tanks and exposed to vapors in the tanks that are not compatible with the transducer material.

e. Transducers shall be capable of being completely submerged without damage.

f. Transducers shall be suitable for the surface, pipe, or flange mounting as indicated on the Drawings or Instrument Device Schedule. Appropriate mounting hardwired shall be provided. Flange shall be six inches and be resistant to attack by the medium being metered or, where required, shall be protected by corrosion- resistant coatings and facings.

Options/Accessories Required

g. Transducers located in areas where freezing condensation may occur shall be provided with special heaters or another type of transducer protection designed to prevent sensor icing.

h. A signal cable as recommended by the manufacturer, for installation between the transducer(s) and the transmitter. Length, up to 1200 feet, shall be as required by installation indicated on the Drawings.

Transmitter/Converter

i. Type

1) Microprocessor based compatible with the transducer(s) provided.

2) Functional/Performance

a) Resolution (including transducer): Plus or minus 0.1 percent of range or 0.08 inches, whichever is greater.

b) Accuracy (including transducer): Plus or minus 0.25 percent of range or 0.24 inches.

c) Range: As required by the installation indicated on the Drawings.

d) Temperature Range: -20 to 50 degrees C.

e) Output: Two isolated 4-20 mA output and one, three, or six alarm contacts adjustable to trip at any point in the instrument range. Output contacts shall be rated 5 A at 230 VAC.

f) Temperature Compensation: Compensation over the temperature range of the sensor.

g) Display: Digital indicator displaying level/differential level or volume in engineering units or percent as indicated on the Drawings or in the Instrument Device Schedule.

h) Diagnostics: On-screen instructions and display of self-diagnostics.

i) Loss of Signal: Transmitter shall ignore the momentary loss of echo signals and shall indicate loss of echo on the transmitter unit.

j) Configuration Protection: Programmable parameters shall be protected using E2PROM. Battery backup protection is not acceptable.

j. Physical

1) The transmitter shall be suitable for surface or pipe stand mounting.

2) The enclosure shall be NEMA 4X.

k. Accessories Required

l. Hand-held programmer where required for configuration and calibration of the instrument.

G. Hydrostatic Type Level Transmitter

The level transmitter system shall consist of a pole-mounted submersible pressure sensor/transmitter unit that is suitable for direct submersion into the liquid being measured.

The sensor shall be a cable-suspended ceramic element. The bottom of the censor shall be at elevation as shown on the Contract Drawings. The sensor assembly shall have stainless steel weighted housing.

The sensor cable shall be of sufficient length so that no splice or connector is required in the wet or inaccessible area, and the vent tube termination point is located in an area protected from dirt and moisture.

The assembly shall include 6 lbs. sink weight, cable hangers, calibration adaptor, lightning protection, and cable termination box. The sink weight shall also serve as a protective cage for a transmitter installed on the bottom of wastewater tank. The cage diameter shall not exceed 4 inches.

The transmitter shall have a two-wire type 4-20 mA DC output that is proportional to level. The nominal range of the level transmitter shall be as shown in the instrument list. The transmitter shall be suitable for an operating temperature range of -20 deg C to +60 deg C. Accuracy of the level transmitter shall be ±0.10 percent of the calibrated span. The temperature effect of the level transmitter shall be ± 0.015 percent of upper range limit per deg C. Stability of the level transmitter shall be ± 0.1 percent of upper range limit per six months. The standard response time for the

level transmitter shall be a maximum of 150 milliseconds (ms) for a 90 percent response to pressure change.

The level transmitter shall be certified for NFPA Class I Division 1, Groups C and D, and approved for marine use by the American Bureau of Shipping.

H. Pressure Gauge

a. Design:

b. Bourdon tube pressure element type, liquid filled gages for pressure ranges of 15 psi and greater and vacuum ranges to 30 inches of Hg

c. Case: Solid front design constructed of glass-filled polyester. Color: Black.

d. Ring: Threaded, glass-filled polyester.

e. Full blowout back.

f. Window: Safety Glass

g. Dial: White with black marking; 270-degree scale.

h. Bourdon Tube and Socket: Type 316 Stainless Steel, heliarc welded

i. Unless otherwise specified in the Instrument Schedule.

j. Movement: Cam and roller movement, 300 series stainless steel.

k. Size: 4-1/2-inch. Unless otherwise noted.

l. Connection: 1/2-inch male NPT back or bottom as required.

m. Mounting: Stem, flush panel or wall mounting as required.

n. Adjustable pointer.

o. Externally accessible zero adjustments.

p. Built-in overload and underload movement stop.

q. Pressure Snubber: Sintered stainless steel snubber threaded into gage

r. Socket or in external stainless steel housing with 1/4-inch NPT male and

s. Female connections.

t. Filling Liquid: Flurolube Oil, unless otherwise noted.

u. Process Isolation: Provide gauge cocks or ball valves for process isolation

v. In accordance with the requirements of this Section.

w. Provide diaphragm seal where shown or required.

Performance:

x. Accuracy: ±0.5 percent of span (ANSI B40.1 Grade 2A).

I. Pressure Switch

Pressure Switches (non-sludge application):

a. Pressure switches shall be diaphragm actuated type switches. Switches shall be the field-adjustable type, with trip point repeatability better than 1 percent of actual pressure. Switches shall have over-range protection to maximum process line pressure. All switches shall have weatherproof housings. Switches shall be the differential type where indicated in the Process Control Software Instrument Lists. Switch wetted parts shall be compatible with the process fluid. Where the process is not defined, all wetted parts shall be Teflon-coated or Viton, and the connection port shall be stainless steel.

b. Surface-mounted switches shall be provided with 1/4 inch NPT connections. All stem-mounted switches shall be provided with 1/2 inch NPT connections.

c. All pressure switches shall be ranged in psi and all vacuum switches in inches of water. Unless otherwise indicated, switches shall have a fixed deadband and shall be the auto-reset type. As a minimum, switches shall be SPDT, rated 10 amp at 120 VAC.

d. Each switch shall be provided with a threaded end, ball-type shutoff valve. Shutoff valve materials shall be compatible with the process fluid. Where the process is not specified, valves shall have AISI Type 316 stainless steel wetted parts and Teflon seals. Multi-port valves shall have all unused ports plugged. Shutoff valve construction shall be as detailed in Section 40 50 20 - Ball Valves.

e. Where indicated on the drawings or in the Process Control Software Instrument Lists, the switch shall be provided with a pressure snubber. Each snubber shall be of a size and pressure range compatible with the switch served. Snubbers shall be Ashcroft "Pulsation Dampers" or approved equal.

f. Where indicated on the drawings or in the Process Control Software Instrument Lists, a diaphragm seal shall be provided for the respective switch. Diaphragm seals shall be the thread-attached type with removable AISI Type 316 stainless steel diaphragm, zinc or cadmium plated carbon steel upper housing, and stainless steel lower housing. The upper housing shall be contoured to fit and provide a seat and seal for the diaphragm and shall be designed to permit removal of the switch with the system under pressure. The lower housing shall be provided with a tapped and plugged 1/4 inch NPT flushing connection. Each diaphragm seal and the switch served shall be factory-assembled, filled with a suitable fluid, and calibrated as a unit.

g. Switches shall be installed at the locations indicated on the drawings, with installation conforming to the installation details. All switches, snubbers, and diaphragm seals shall be installed in the vertical, upright position. Thread sealer, suitable for use with the associated process, shall be used in the assembly of threaded connections. All connections

shall be free from leaks. Lines shall be purged of trapped air at switch locations before installation of the switch or diaphragm seal.

J. Signal Loop Isolator

Design:

a. Provide the necessary quantity to perform all monitoring and control functions as specified and shown on the Contract Drawing.

b. Type: Isolator type signal converter/transmitter/transducer that accepts any standard or many non-standard input signals and produces a 4-20 mA output or another standard process current or voltage signal with three-way isolation (power, signal input, and signal output all isolated from each other).

Construction and Required Features:

c. Span Adjustment: 22-turn front panel potentiometer.

d. Zero Adjustment: 22-turn front panel potentiometer.

e. Housing: General purpose enclosure designed for internal panel mounting.

f. Power Supply Input: 117 VAC, 50/60 Hz.

g. Interference Protection: Built-in RFI/EMI protection.

Performance Requirements:

h. Calibration Capability: 0.2 percent of span.

i. Ambient Temperature:

1) Range: + 32 F to +158 F.

2) Effect: ± 0.02 percent per Deg F over the entire range.

j. Frequency Response: 5 Hz.

k. Input Current: 4-20 mA into 50 Ohms nominal.

l. Input Voltage: 1-5 Volts.

m. Output Current: 4-20 mA into 0-1200 Ohm load.

n. Output Voltage: 1-5 VDC at 0.25 mA DC max.

o. Span Adjustment: 100 percent ± 25 percent of span, with full scale input.

p. Zero Adjustment: 0 percent ± 10 percent of span, with minimum input.

q. Load Effect: ± 0.02 percent of the span from 0 to maximum load resistance.

Control Relay (General Purpose)

Design:

r. Type: General purpose, plug-in type rated for continuous duty.

Construction Features:

s. Coil Voltage: 24 VDC or 120 VAC as required.

t. Contact Configuration: Number and arrangement as required to perform the intended functions, plus a minimum of one spare SPDT contact per relay function.

u. Contact Material and Rating:

1) General Use: Silver or silver cadmium oxide contacts rated for 10 Amps minimum at 120 VAC.

2) Low Power Switching: Fine silver, gold flashed contacts specifically designed for low power switching, rated for 2 Amps minimum at 30 VDC.

v. Mounting: Pin or blade mount in sockets for sub-panel mounting on DIN rail. Sockets shall have screw terminals for wiring connections, which shall accept a minimum of two #14 AWG wires.

w. Cover: Clear plastic dust cover.

x. Indication: Indicator light.

y. Accessories: Hold-down spring, push-button test.

z. Approvals: UL recognized.

Loop Power Supply (Single Loop)

Design:

aa. Provide DC power for 4-20 mA current loops and as shown on the Contract Drawing.

bb. Type: A single output, regulated, plug-in type 24 VDC power supply.

Construction Features:

cc. Housing: All components shall be enclosed.

dd. Mounting: Power supply to plug into the octagonal socket with numbered, screw-type terminals. Provide mounting bracket to secure power supply module in the octagonal base.

Performance:

ee. Temperature: Operational from -10 to 65 C.

ff. Output: 24 VDC, 200 mA.

gg. Power Requirements: 120 VAC, 60 Hz, single phase.

hh. Regulations: ±0.5 percent.

ii. Ripple: 0.5 mV RMS.

jj. Protection: Overvoltage protection.

kk. Approval: U.L. recognized.

K. Control Panel Pilot Devices

Design:

a. Provide selector switches, pushbuttons and indicating lights as specified and shown. All components shall be of the full size, heavy-duty, oil-tight, round type, with modular contacts and NEMA rating equal to that of the enclosure on which devices are installed.

b. Provide individual legend plates for indication of switch, push-button, and light functions (e.g. Open, Closed, Hand-Off-Auto). Legend plates shall conform to the requirements of this Section.

c. Start pushbuttons shall have a flush button, while stop pushbuttons shall have raised pushbuttons.

d. Where noted on the Contract Drawing, pushbuttons and selector switches shall be illuminated type and use the color code as shown.

e. Units shall be Heavy Duty, 30.5 mm, oil tight, and shall maintain the NEMA rating of the panel or enclosure. Corrosion resistant devices shall be provided on NEMA 4 and 4X panels and enclosures.

f. Extra-large, engraved, laminated name plates and function indicator escutcheon.

Construction Features:

g. Selector Switch:

1) Two (2), three (3), four (4) and (X) position as shown and required.

2) Maintained or spring return position; maintained contacts; number and arrangement as required to perform intended functions specified but not less than one double pole, double throw, double break contact per switch. Contact rating shall be compatible with AC or DC throughput current of devices simultaneously operated by the switch contacts but not less than 10 Amperes resistive at 120 Volts AC or DC continuous.

3) Heavy Duty, gloved hand operator, extra-large, engraved position indicator.

h. Push-button:

1) Maintained or momentary as required and as shown on the Contract Drawing.

2) Contacts shall comply with requirements specified for selector switches above.

3) Provide extended head push-button for all stop functions, two inch-push/pull the mushroom head and maintained contacts for emergency stop functions, and flush head pushbuttons for all

other functions. Emergency stop push buttons shall have padlock attachment.

i. Indicating Lights:

1) Integral transformer type.

2) Low voltage, long life L.E.D. lamps (6 Volts).

3) 0.6 Watts maximum.

4) Integral push-to-test required.

5) Lense colors shall be as follows:

a) Run or Open: Red

b) Off or Closed: Green

c) Fault: Yellow

L. Temperature Sensor/Transmitter

Sensor Element

a. Type:

1) Three wire platinum RTD.

b. Function/Performance:

1) Range: As required by the measuring range indicated in the Instrument Device Schedule.

2) Accuracy: Resistance versus temperature shall meet performance requirements of IEC 751 Class B.

3) Maximum Thermal Response Time: 9 seconds to reach 50 percent sensor response when tested in flowing water according to IEC 751.

4) Temperature Coefficient: 100 ohms at 0 degrees C, with a temperature coefficient of 0.00385 ohms/ohm/degree C.

5) Self-Heating: Maximum self-heating factor of 0.15 degrees C/mW.

c. Physical:

1) 316 stainless steel sheath.

2) Spring loaded sensor assembly.

3) Sensor shall penetrate into the pipe where it is installed, by 1/3 to 1/2 of the pipe diameter.

4) Sensor shall be provided with covered connection head. Sensor and connection head shall be NEMA 4X. Where indicated on the drawings to be installed in a hazardous location, the sensor

assembly shall be explosion proof approved for Class I, Division 1, Groups C and D.

d. Accessories Required:

1) Sensors shall be installed in 316L stainless steel thermowells. Where exposed to corrosive gasses such as odorous air in odor control applications, thermowells shall be Hastalloy. Thermowells shall be threaded.

2) Extensions shall be provided for sensors installed in insulated pipe. Extensions shall clear the pipe insulation. Extensions shall also be provided where process temperatures are above 100 degrees C.

Transmitter:

e. Type:

1) Remotely mounted, two wire, intelligent transmitter compatible with a sensor provided.

f. Function/Performance:

1) Digital Accuracy: plus or minus 0.2 degrees C.

2) Stability: plus or minus 0.1 percent or 0.1 degrees C, whichever is greater, for 24 months.

3) Operating Temperature: -40 to 85 degrees C.

4) Output: 4 20 mA DC linear with temperature. The transmitter shall also communicate using HART protocol.

5) The output may be set as difference or average of two measured temperatures.

6) The output may be configured for custom curves including Callendar-Van Dusen correction.

7) Display: Digital indicator displaying temperature in engineering units.

g. Diagnostics:

1) Self-diagnostics with transmitter failure driving output to above or below out of range limits.

2) LED indication of transmitter faults.

3) Simulation capability for inputs and loop outputs.

4) Test terminals available to ease connection for test equipment without opening the loop.

5) The run-time clock shall be available to determine usage for warranty purposes. 5-year warranty on this clock reading is included.

h. Physical:

1) The enclosure shall be NEMA 4X. Where indicated on the drawings to be installed in hazardous locations, the transmitter shall be explosion proof approved for Class I, Division 1, Groups C and D.

2) The power supply shall be 24 VDC loop powered.

M. Differential Pressure Switch

Type:

a. Diaphragm actuated.

Function/Performance:

b. Setpoint: Field adjustable and set between 30 and 70 percent of the adjustable range.

c. Dead Band: Fixed deadband.

d. Over Range Protection: Over range protection to twice the maximum process line pressure.

e. Output: Dry contacts rated 10 A at 230 VAC. Single pole double throw (SPDT) unless the requirement for double pole double throw (DPDT) switches is shown on the instrument device schedule.

Physical:

f. Housing: NEMA 4X (IP65) for nonhazardous areas. For installation in hazardous areas, housing shall be explosion proof approved for Class I, Division 1, Groups C and D (EEx d IIB T5).

g. Switching Assemblies: Hermetically sealed switches.

h. Wetted Parts: 316L stainless steel diaphragm, viton seals, 316 stainless steel connection port.

Accessories/Options Required:

i. For each differential pressure switch, provide a three valve manifold. The manifold shall be 316 stainless steel.

N. Temperature Switch

Type:

a. Bulb and capillary.

Function/Performance:

b. Set Point: Field adjustable and set between 20 and 80 percent of the adjustable range.

c. Deadband: Fixed deadband unless noted otherwise in the Instrument Device Schedule.

d. Reset Automatic reset type unless noted otherwise in the Instrument Device Schedule.

e. Over Range Protection: Over range protection to maximum process line temperature.

f. Switch Rating: 15 amps at 250 VAC.

Physical:

g. Switch Housing: Remotely mounted. NEMA 4X (IP66) for nonhazardous locations. Where indicated on the drawings to be mounted in hazardous locations, the switch housing shall be explosion proof, approved for Class I, Division 1, Groups C and D (EEx d IIC).

h. Switching Arrangement: Single pole double throw (SPDT) unless double pole double throw (DPDT) switches are indicated on the Instrument Device Schedule.

i. Wetted Parts: 316 stainless steel.

j. Bulb penetration into pipe shall be approximately 4 inches (100 mm) for pipe diameters less than or equal to 12 inches (300 mm) and approximately 7 inches (175 mm) for pipe diameters greater than 12 inches (300 mm).

Accessories Required:

k. Bulbs shall be installed in 316 stainless steel thermowells. Thermowells shall be threaded accept for those installed in ozone system piping which shall be welded.

l. Provide sufficient armored capillary tubing up to 15 ft (4.5 m) in length as required by the installation indicated on the drawings.

O. Hourmeter

Type:

a. Electromechanical

Physical

b. 7 Figures (99999.99) 0.14” Tall

c. Non-Resettable

d. Mounting Clip or Mounting Holes

e. Termination: ¼” Spade Terminals with Screws

f. Case Material: Black Polymer

g. Display Shape: Rectangular

h. Display Dimensions: 1.45” X 0.95”

i. Power:

1) Voltage: 24, 115 or 230VAC (+/-10%)

2) Power: 2 W

j. Environmental:

1) Front Panel Rating: IP65

2) Operating Temperature: -22°F to 180°F

3) Storage Temperature: -40°F to 185°F

4) Vibration: 1G [10/500HZ] IEC 68-T2-34

5) Shock: 30G [16ms] IEC 68-T2-27, 25g [16MS] IEC 68-T2-19

1.13 Fabrication / Assembling / Finishes

A. Not Used

1.14 Source Quality Control / Shop Tests

A. PMCS PMIDs shall confirm to the requirements of Section 40 80 81 – PMCS Factory Testing.

B. PMCS OITs PLC monitoring and control criteria specified under this Section shall be functionally verified during PMCS Factory Testing.

C. PMIDs Factory Testing shall conform to the requirements of Section 40 80 91 – PMCS Factory Testing.

EXECUTION

1.15 Examination / Preparation

A. Not Used

1.16 Installation

A. Contractor shall install each PMID in accordance with manufacturer's recommendations, this Section and the Contract Documents.

B. Panels into which these PMIDs are to be mounted shall provide rigid structural support for the PMIDs and shall allow necessary access and working space to permit maintenance of the PMID while installed.

C. Additional strengthening and/or bracing required for a sound installation shall be provided as part of this contract.

D. Contractor shall provide all supports, bracing, wiring, and incidental hardware.

E. All software required for the PMIDs shall be loaded, configured and fully tested as part of this contract.

F. Contractor shall configure the OITs using function keys and instructional prompts so that operators can operate equipment, modify set points and presets and monitor the system without any special training or knowledge of the controller with which the OIT interfaces.

1.17 Field Testing / Quality Control

A. PMIDs Field Testing shall conform to the requirements of Section 40 80 82 – PMCS Startup and Field Testing.

B. Section 40 80 82 details how PMIDs specified under this Section shall be verified during Field Testing.

1.18 Startup / Demonstration

A. Section 40 80 82 – PMCS Startup and Field Testing details the requirements for OAD and PMCS Upset and Recovery Testing.

The OAD and the PMCS Upset and Recovery Testing shall serve as the final verification of the correct functioning of all PMIDs.

1.19 Adjusting / Protection / Cleanup

A. Not Used

END OF SECTION

40 79 00 MISCELLANEOUS INSTRUMENTS, VALVES, AND FITTINGS

GENERAL

1.01 Summary

A. The Contractor shall furnish, test, install and place in satisfactory operation, the instrumentation and control system accessories with all spare parts, and appurtenances as herein specified and as shown on the Drawings.

B. Accessories include various items of equipment that may be required in the system but are not scheduled. Accessories are shown on details, flow sheets or plans. Accessories are also called out in specifications for scheduled instruments and in the installation specifications. It is not intended, however, that each piece of hardware required will be specifically described herein. This Specification shall be used as a guide to qualify requirements for miscellaneous hardware whether the specific item is described or not.

1.02 Payment

A. There is no separate payment provision for this Section.

1.03 Related Sections

A. Section 40 61 13 – PMCS General Requirements

B. Section 40 70 00 – Instrumentation for Process Systems

1.04 References

A. Not Used

1.05 Description

A. General

The I/O point list shall be used to configure the I/O interface hardware of all controllers of the PMCS.

The listing includes information on signal functions, signal ranges and range conversions.

As a minimum, the Contractor shall provide all hardware and software to provide the I/O points listed in the accompanying I/O List as indicated in the Contract documents and as required.

The Contractor shall furnish and install as spares, twenty-five (25) percent of each type of I/O of the listed I/O point hardware.

The Contractor shall furnish and install spare hardware and fully configure all spare points into the PMCS databases, displays, trends, alarms and controllers.

All I/O points designated as spares shall be completely prewired to equipment and panel terminal blocks such that only field connections need to be complete when the I/O is activated.

B. I/O List Column Headings

NO or Ref NO or Item NO – is a sequential number starting with a discrete number used to order the entries in the I/O List and permitting the list to sorted and resorted to its original order.

TAG NUMBER – is an alpha numeric character string used to identify the I/O point and laid out as shown on the Contract Documents.

I/O Type is a two letter describing the I/O as follows:

a. AI designates an analog input (4 to 20 mA DC)

b. AO designates an analog output (4 to 20 mA DC)

c. DI designates a discrete input

d. DO designates a momentary, maintained or latched discrete output.

INSTRUMENT TYPE – is an alphanumeric string up 30 positions describing the signal attribute of the point such as:

e. Flow Indicating Transmitter

f. Limit Switch Open

g. Solenoid Valve

SERVICE – is an alphanumeric string up 30 positions describing the equipment where the signal is located.

P&ID NUMBR – is the listing of the P&ID Drawing where the I/O point can be found.

LOCATION – is the listing of the physical location of the instrument or device generating the I/O Point

RANGE – is the range of the of the I/O in engineering units.

REMARKS – can be used for supplementary information or to cross-reference information.

1.06 Quality Assurance

A. The Contractor shall comply with the Quality Assurance requirements listed in Section 40 61 13 – PMCS General Requirements, this Section and the Specifications.

B. The Contractor shall not commence production of database until the configuration of all I/O points has been approved by the Engineer.

C. For each I/O attribute listed in the I/O list which cannot be used exactly as listed, submit an explanation of the reason for the deviation and propose a method to modify the I/O list information.

D. I/O information specific to all controllers shall in addition be submitted with the submittal covering that controller.

E. I/O Lists shall be kept current, updated regularly and shall be available for inspection by the Engineer at the project site.

1.07 Submittals

A. The Contractor shall comply with submittal requirements listed in Section 40 61 13 – PMCS General Requirements, this Section and the Specifications.

B. Contractor shall submit all I/O lists and schedules for the approval of the Engineer.

C. The Contractor is solely responsible for the timing of I/O listing submittal to enable approval by the Engineer.

D. The Contractor shall create, maintain and submit for review, an updated I/O Listing of all device, instruments and I/O points.

E. Submittal shall be made at least 60 days in advance of any proposed use.

1.08 Delivery, Storage, and Handling

A. The Contractor shall comply with delivery, storage and handling requirements listed in Section 40 61 13 – PMCS General Requirements.

1.09 Spare Parts, Special Tools, and Supplies

A. Not Used

1.10 Special Warranty Provisions / Guarantee Periods

A. Not Used

PRODUCTS

1.11 Manufacturers

A. Process Tubing

Process, impulse, or capillary tubing shall be 1/2 x 0.065-inch seamless, annealed, ASTM A-269 Type 316L stainless steel with 37 degrees Type 316 stainless steel flared fittings or Swagelock or Parker-CPI flareless fittings.

Piping for closely coupling instruments to process seals shall be standard stainless steel NPT threaded piping or NPT tapped mounting blocks.

A nickel-based lubricant shall be used on threaded stainless steel piping connections to prevent galling.

B. Power, Control, and Signal Cables

Power, control and signal wiring shall be provided under Division 26 of the Specifications, unless otherwise indicated.

C. Chemical Diaphragm Seals

Diaphragm seals shall be provided for isolation of pressure gauges, switches and transmitters attached to systems containing chemical solutions or corrosive fluids. As a minimum, seals shall be of all 316 stainless steel construction. In general, diaphragms shall be 316L stainless steel for operating pressures at or above 15 psi and elastomers for operating pressures below 15 psi.

However, all components shall be non-reactive with the process fluid in all cases. Refer to the Process Control System Instrument Lists for specific materials requirements.

Seal shall have fill connection, 1/4-inch NPT valved flush port and capable of disassembly without loss of filler fluid. Where specified, diaphragm seals shall comply with the above requirements and shall be provided with 316 SS factory filled capillaries.

Seals shall be Helicoid Type 100 HA, Mansfield & Green, Ashcroft, or equal.

D. Isolating Ring Seals

For solids bearing fluids, line pressure shall be sensed by a flexible cylinder lining and transmitted via a captive sensing liquid to the associated pressure sensing instrument(s).

a. Full Line Size Isolating Ring Seals

1) Where indicated, the sensor body shall be full line size wafer design.

2) Full line size isolating ring seals shall have 316 stainless steel housing and assembly flanges and Buna N flexible cylinder lining for in line mounting. The wafer shall have through bolt holes or centerline gauge for positive alignment with the associated flanged piping. Gauge or readout shall be oriented for viewing.

3) The captive liquid chamber and associated instrument(s) shall be furnished with threaded drain tap and plug. Manufacturer shall furnish seals with a quick-disconnect-type fitting for field disassembly and reassembly, however, seal and instruments shall be factory assembled prior to arriving at the job site

4) Isolating ring seals shall be RED Valve Series 40, Ronningen Petter Iso Ring, Moyno RKL Series W, Onyx Isolator Ring, or equal.

b. Tapped Isolating Ring Seals

1) Where indicated, pressure shall be sensed via a minimum 1-1/2" diameter spool type isolating ring seal mounted on a 1-1/2" pipe nipple at 90 degrees from the process piping.

2) An isolation ball valve shall be provided between the process piping and the ring seal, and a cleanout ball valve shall be provided between the ring seal and the atmosphere. The factory assembled and filled pressure instrument shall be back or side mounted to the ring seal such that the gauge or readout may be viewed normally.

3) Tapped isolating ring seals for solids service shall be Red Valve Series 42/742, Ronningen Petter Iso Spool, Onyx Isolator Ring, or equal.

E. Filling Medium:

The filling medium between instruments, isolating ring seals and diaphragm seals shall be a liquid suitable for operation in an ambient temperature ranging from -10 degrees F to +150 degrees F.

Filling medium shall be silicone unless oxidizing agents, such as sodium hypochlorite, are present, then halocarbon shall be used.

F. Tamper Evident Paint

Piping and screwed/bolted connections of instrumentation containing the filling medium shall be marked with a small continuous tick mark of tamper evident paint over each piping/instrument joint. Tamper evident paint shall be applied prior to instrument assemblies arriving on the job site. Disturbance of the joint shall break the paint.

Instrument assemblies with broken paint or missing paint shall not be accepted and shall be repaired or replaced at no additional cost to CIty. Paint shall be Dykem Cross-Check or equal.

G. Isolation Valves

Isolation valves shall be 1/2 inch diameter ball valves, unless otherwise indicated, with a Type 316 stainless steel body, Type 316 stainless steel ball. Where 316 stainless steel is not compatible with the process fluid, materials of construction shall be suitable for the associated process fluid (e.g., PVC for chemical service).

H. Alarm Annunciation Devices

Sirens:

a. For Class I, Division 2 areas and non-hazardous areas:

1) Provide NEMA 4X and Class I, Division 2 rated alarm horn capable of 32 selectable warning tones. Coordinate tone selection with the City. Volume shall be field adjustable between 0 and 114 dBA measured at 10 feet.

2) Alarm horn shall be the SelecTone 302GCX series with UTM tone module as manufactured by Federal Signal Corporation or approved equal.

b. For Class I, Division 1 areas:

1) Provide NEMA 4X and Class I, Division 1 rated alarm horn capable of 32 selectable warning tones. Coordinate tone selection with City. Volume shall be field adjustable between 0 and 114 dBA measured at 10 feet.

2) Alarm horn shall be the SelecTone 302X series with UTM tone module as manufactured by Federal Signal Corporation or approved equal.

Strobe Lights:

c. Strobes located within the same room, or otherwise visible from any shared frame of view, shall be synchronized per the requirements of NFPA 72. Strobes shall by synchronized by the strobe manufacturer's synchronization module. Strobe circuits shall not exceed the continuous duty current rating of the synchronization module.

Synchronization module shall be Federal Signal Model SSM, Edwards Signaling Model EG1M-RM, or equal.

d. For Class I, Division 2 areas and non-hazardous areas:

1) Provide red strobe status indicator. Unit shall be rated NEMA 4X and Factory Mutual approved for a Class I, Division 2, Group D area. Unit shall contain a durable polycarbonate housing and be surface mount. Unit shall be UL listed. Strobe shall be powered from 24VDC.

2) Alarm strobe shall be Federal Signal Model 225XST, Edwards Signaling Model 116DEGEX-FJ, or equal.

e. For Class I, Division 1 areas:

1) Provide red explosion proof dome covered strobe unit rated NEMA 4X and Factory Mutual certified for a Class I, Division 1, Group D area. Unit shall be UL listed. Strobe shall be powered from 24VDC.

2) Alarm strobe shall be Federal Signal Model 27XST, Edwards Signaling Model 116DEGEX-FJ, or equal. Compatible mounting hardware by the strobe manufacturer shall be furnished.

f. Lens color shall be as indicated on the Drawings.

1.12 Materials / Equipment

A. Not Used

1.13 Fabrication / Assembling / Finishes

A. Not Used

1.14 Source Quality Control / Shop Tests

A. Not Used

EXECUTION

1.15 Examination / Preparation

A. Not Used

1.16 Application

Not Used

1.17 Field Testing / Quality Control

A. Not Used

1.18 Startup / Demonstration

A. Not Used

1.19 Adjusting / Protection / Cleanup

A. Not Used

END OF SECTION

NO TEXT ON THIS PAGE

40 80 81 PMCS FACTORY TESTING

GENERAL

1.01 Summary

A. Contractor shall provide all labor, materials, equipment and incidentals as shown, specified and required to perform Witnessed Factory Acceptance Testing of all equipment and components of the PMCS, at the manufacturer's facility.

B. Witnessed Factory Acceptance Testing shall verify that the PMCS, its components and associated equipment functions properly both as units and as an on integrated systems and that the functional and performance requirements of the Contract Documents are met.

1.02 Payment

A. There is no separate payment provision for this Section, it shall be paid under Item ESCR-51.12SG18.

1.03 Related Sections

A. Section 01 43 15 – Witness Shop Testing

B. Section 40 61 13 – PMCS General Requirements.

1.04 References

A. Definitions

WFAT - Witnessed Factory Acceptance Tests

Section 40 61 13 – PMCS General Requirements defines the terms and abbreviations used in this Section and the PMCS

B. Reference Standards

Section 40 61 13 – PMCS General Requirements lists the standards applicable to this Section and the PMCS.

1.05 Description

A. General

The intent of the WFAT is to ensure that all equipment and components of the PMCS and peripherals to be supplied by the Contractor and intended for operation in the Contract Facility and as defined in the Contract documents demonstrate their performance over their design ranges as individual units and an as integrated system.

All the Control Strategy submittals which have been approved for integration into the PMCS and associated equipment shall be demonstrated over the full range of their designed operation.

Every attempt shall be made during the WFAT to resolve any issues arising.

No issue observed during the WFAT shall be left for resolution during Field Testing unless approved by the Engineer.

The Contractor shall provide all necessary supervision, personnel, materials, fluids, facilities, temporary test setups, test fixtures, test equipment, simulation where approved to perform satisfactory and complete testing.

The City representative, Engineer and the Contractor's representative shall be present for all WFATs.

Presence of the City and the Engineer at the WFAT does not relieve the Contractor from conforming to the requirements of the Contract Documents.

Presence of the City and the Engineer at the WFAT shall in no way imply Acceptance of the PMCS equipment or its components.

B. Notifications and Scheduling

The WFAT shall not be scheduled or begun, until all related PMCS Shop Drawings, Test Procedures, Test Documentation and Schedules have been submitted and approved.

Integrated PMCS WFAT shall only be scheduled after the PMCS supplier has conducted a non-witnessed factory test and certified that the complete PMCS and associated equipment are ready for a WFAT.

The Contractor shall notify the Engineer in writing 90 days before expected initiation of the WFAT.

1.06 Quality Assurance

A. The Contractor shall comply with the Quality Assurance requirements listed in Section 40 61 13 – PMCS General Requirements, this Section and the Specifications.

B. All PMCS components and associated equipment shall be inspected.

Inspection shall include but not be limited to the following:

Nameplates and tags

Wire sizes and color coding

Annunciator and terminal block spares

Proper wiring practices and grounding

Enclosure flatness, finish and color.

1.07 Submittals

A. The Contractor shall comply with submittal requirements listed in Section 40 61 13 – PMCS General Requirements, this Section and the Specifications.

B. Contractor shall submit information on factory testing procedures and schedules to verify that testing shall fulfill the requirements specified in this Section and the Specifications.

C. Submittal shall be made at least 90 days months in advance of any scheduled testing and shall include dates of scheduled tests.

D. The procedures for WFATs detailed in this Section shall be submitted for approval by the Engineer.

E. The details of simulation panel and/or simulation software which will be used in conjunction with the PMCS equipment shall submitted for to the Engineer for approval

F. Reports

A report on the WFATs completed shall be submitted to the Engineer for approval.

Factory test reports shall include the following information:

a. List of tests performed.

b. Certified check lists or documentation verifying all I/O has been tested, as specified in this Section.

c. Document verifying all panel wiring has been checked and conforms to the approved submittals with any correction made during the testing.

d. List of all modifications or corrections identified during the WFAT and corrective action taken.

e. Equipment shall not be shipped from the factory until certified factory test reports indicating satisfactory performance have been submitted and approved by the Engineer.

1.08 Delivery, Storage, and Handling

A. The Contractor shall comply with delivery, storage and handling requirements listed in Section 40 61 13 – PMCS General Requirements.

1.09 Spare Parts, Special Tools, and Supplies

A. Not Used

1.10 Special Warranty Provisions / Guarantee Periods

A. Not Used

PRODUCTS

1.11 Manufacturers

A. Factory Testing shall be as implemented by the PMCS Supplier.

1.12 Materials / Equipment

A. Not Used

1.13 Fabrication / Assembling / Finishes

A. Not Used

1.14 Source Quality Control / Shop Tests

A. PMCS Hardware Operational Testing

All input/output devices and components shall be tested to verify operability and basic calibration.

All PMCS hardware components and associated equipment shall be tested to verify proper operation of the equipment as standalone units. Test shall include, but not be limited to, the following:

a. AC/DC power checks

b. Power fail/restart tests

c. Diagnostics checks

d. Test demonstrating that all specified equipment functional capabilities are working properly.

All system components shall be tested to verify that communication between units is working properly.

An integrated P M C S test with all system equipment connected (excluding field sensors and instruments) shall be performed to verify that· all equipment is performing properly as an integrated system.

All field sensors and instruments shall be simulated over their operating ranges inclusive of major set points.

B. PMCS/Telemetry System Software Demonstration

C. Contractor shall demonstrate all system software utility and security programs incorporated into the PMCS to illustrate the various functions and capabilities specified.

D. Contractor shall demonstrate the operation and display of all software based on a simulation of 20 percent of total input/output count, both analog and discrete, as selected by the manufacturer.

E. The Engineer shall a l s o randomly select, at the time of the test, additional inputs and outputs to be simulated in an amount approximately equal to 10 percent of total input/output count.

F. Demonstration shall show that the monitoring and control application software associated with the input/output points performs the functions intended.

G. System performance shall be tested using a fully integrated system, including all software and hardware if applicable.

To achieve this, the entire control system, including all the peripheral devices and all interconnecting cables, shall be assembled on the factory test floor and simulated inputs applied.

Every device shall have nameplate with description and device's P&ID tag number.

Nameplates shall be removable and interchangeable for multiple use during the test.

Simulated inputs/outputs shall at minimum include

a. Toggle switches to simulate field or other input contacts

b. Indicating lights to simulate outputs from tested panels

c. Control relays to simulate MCC coil inputs

d. Time relays to simulate position switches

e. Indications (mA) to indicate every 4-20 mA output from tested panel

f. Potentiometers to simulate 4-20 mA inputs to tested panel

The Contractor shall carry out a full system test, during which the entire system shall operate continuously without failure in accordance with the requirements of the Specifications and Drawings

H. Demonstration of communication between PLC's shall be included in the Test Procedure where applicable.

EXECUTION

1.15 Examination / Preparation

A. Not Used

1.16 Installation

A. Not Used

1.17 Field Testing / Quality Control

A. Field Testing

Field Testing shall conform to the requirements of Section 40 80 82 – PMCS Startup and Field Testing.

1.18 Startup / Demonstration

A. Not Used

1.19 Adjusting / Protection / Cleanup

A. Not Used

END OF SECTION

NO TEXT ON THIS PAGE

40 80 82 PMCS STARTUP AND FIELD TESTING

GENERAL

1.01 Summary

A. The Contractor shall provide all supervision, labor, materials, equipment and incidentals as shown, specified and required to furnish and install all equipment and coordinate all activities necessary to perform check out, start up and field testing of the PMCS and all associated equipment.

1.02 Payment

A. There is no separate payment provision for this Section.

1.03 Related Sections

A. Section 40 61 13 – PMCS General Requirements.

1.04 References

A. Definitions

SFT – Start-up and Field Testing.

OAD – Operational Availability Demonstration.

URT – Upset and Recovery Testing.

WFAT - Witnessed Factory Acceptance Tests.

Section 40 61 13 – PMCS General Requirements defines the terms and abbreviations used in this Section and the PMCS

B. Reference Standards

Section 40 61 13 – PMCS General Requirements lists the standards applicable to this Section and the PMCS.

1.05 Description

A. Start-up and Field Testing of the PMCS and associated equipment shall include but not be limited to the following:

Check Out, Start up and Initial Operation of Equipment.

a. Instrument calibration and operation

b. Cable and wire testing

c. Instrument Loop testing

d. Control panel installation test

e. Local control of equipment

f. PLC and I/O operation

g. I/O loop testing

Final Field-testing of Equipment

h. Control panel operational testing

i. Instrument full operation testing

j. Verification of local and remote control of individual equipment

k. Execution of control strategies for individual equipment

Check Out, Start up and Initial Operation of System Equipment

l. Process control panel local system operation

m. Preliminary loop tuning

n. Remote control of systems

o. Individual and system loop operation

p. Network and communication link testing

q. Network and communication performance testing

r. Execution of local system logic and control

Final Field-testing of Systems

s. Execution of control strategies for equipment systems

t. Network and communication optimization

B. Integrated System Field Test

C. Operational Availability Demonstration

D. PMCS Upset Testing

1.06 Quality Assurance

A. The Contractor shall comply with the Quality Assurance requirements listed in Section 40 61 13 – PMCS General Requirements, this Section and the Specifications.

B. The Contractor shall retain the services of the PMCS Supplier to supervise, coordinate and perform check-out and start-up of all PMCS components and associated equipment.

C. All I/O points, loops, and functions including spares shall be fully operational and undergo Start up and Field Testing.

D. Start up and Field Testing shall be conducted on all PMCS and associated equipment including those for which Factory Testing has been completed.

E. As part of these services, the PMCS Supplier shall include for those equipment items not manufactured by him, the services of an authorized manufacturer's representative to check and certify the equipment installation and place the equipment in operation.

F. Each manufacturer's representative shall be thoroughly knowledgeable about the specific installation, and factory certified in the installation, operation, and maintenance of the equipment.

G. Start-up and Field Testing shall include but not be limited to, field and panel devices, hardware, software, communications, and programming.

H. Simulators and test equipment may be used for the following test phases:

Check-out, Start-up and Initial Operation of all equipment and systems

I. Actual field conditions, process variables and process fluids shall be used for the following test phases:

Final Tests

Integrated System Field Test

Operational Availability Demonstration

PMCS URT

J. The PMCS Supplier's personnel shall be present for and participate in all phases of the testing of the entire PMCS including all process equipment and systems monitored and controlled by PMCS.

K. Strat-up and Field Testing shall only be considered complete upon the successful performance of all specified functions.

L. Acceptance of PMCS and all associated equipment by the City is contingent upon the approval by the Engineer of all Test Reports.

1.07 Submittals

A. The Contractor shall comply with submittal requirements listed in Section 40 61 13 – PMCS General Requirements, this Section and the Specifications.

B. Contractor shall submit information on all SFT procedures and schedules for the approval of the Engineer, to verify that testing shall fulfill the requirements specified in this Section and the Specifications.

C. Submittal shall be made at least 90 days in advance of any scheduled testing and shall include dates of scheduled tests.

D. The details of simulation panel, simulation software which will be used in conjunction with the PMCS equipment shall submitted for to the Engineer for approval

E. Complete and detailed information, shall include but not be limited to:

Test Flow Charts outlining both the testing and responsibilities of all parties.

Proposed log sheets showing what, when and how all test parameters will be recorded and by whom.

Proposed reporting formats listing all the information to be recorded for each test

F. Test Reports

A report on the each SFT activity completed shall be submitted to the Engineer for approval.

Reports shall include the following information:

a. List of tests performed.

b. All raw field test data, test personnel notes, witness comments

c. Certified check lists or documentation verifying all I/O has been tested, as specified in this Section.

d. Test documentation demonstrating that all digital and analog points of the PMCS residing in all controllers and databases have been conformed to be accurately linked to their respective instrument tag names, database tags and assigned names real or virtual.

e. Document verifying all panel wiring has been checked and conforms to the approved submittals with any correction made during the testing.

f. Confirmation that all modifications or corrections identified during the WFAT have been incorporated into the build of the PMCS an associated equipment tested.

g. Confirmation that all modifications or corrections identified during the SFT have been incorporated into the SFT documentation marked up corrective actions taken.

G. Each major phase of test, such as OAD, shall not commence until certified test reports indicating satisfactory performance of prior major phases have been submitted and approved by the Engineer.

1.08 Delivery, Storage, and Handling

A. The Contractor shall comply with delivery, storage and handling requirements listed in Section 40 61 13 – PMCS General Requirements.

1.09 Spare Parts, Special Tools, and Supplies

A. Not Used

1.10 Special Warranty Provisions / Guarantee Periods

A. Not Used

PRODUCTS

1.11 Manufacturers

A. PMCS Start-up and Field Testing shall be as implemented by the PMCS Supplier.

1.12 Materials / Equipment

A. Not Used

1.13 Fabrication / Assembling / Finishes

A. Not Used

1.14 Source Quality Control / Shop Tests

A. PMCS Factory Testing shall conform to the requirements of Section 40 80 81 – PMCS Factory Testing.

EXECUTION

1.15 Examination / Preparation

A. Not Used

1.16 Installation

A. Not Used

1.17 Field Testing / Quality Control

A. Equipment/System Check Out, Start-up and Initial Operation

The Contractor, under the supervision of the PMCS supplier, and other instrument suppliers as applicable, shall perform the following:

a. Check and approve the installation of all PMCS components and all cable and wiring connections between the various system components prior to placing the various processes and equipment into operation.

b. Conduct a complete system checkout and adjustment, including calibration of all instruments, tuning of control loops, checking operation functions, and testing of final control actions.

c. Where future operational functions are included in this work, they shall be included in the check-out.

d. All problems encountered shall be promptly corrected to prevent any delays in start-up of the various unit processes.

The Contractor shall provide all test equipment necessary to perform the testing during system checkout and start-up.

The Contractor and PMCS Supplier shall be responsible for initial operation of system and shall make any required changes, adjustments or replacements for operation, monitoring and control of the various processes and equipment necessary to perform the functions intended.

The Contractor shall furnish to the Engineer certified calibration reports for all field instruments and devices provided under this contract, as soon as calibrations are completed.

The Contractor shall furnish the Engineer an installation inspection report certifying that all equipment has been installed correctly and is operating properly.

The report shall be signed by authorized representatives of both the Contractor and the PMCS Supplier.

B. Integrated System Field Test

Following the PMCS and associated equipment checkout and initial operation, the Contractor, under the supervision of the PMCS Supplier, shall perform a complete system test to verify that all equipment and programmed software is operating properly as a fully integrated system, and that the intended monitoring and control functions are fully implemented and operational.

Any defects or problems found during the test shall be corrected by the Contractor and then re-tested to demonstrate proper operation.

The PMCS including field sensors/transducers and instruments shall be running and fully operational for a continuous 72 hour period.

The Integrated System Field Test will e determined to have successfully concluded if there are no issues to be resolved at the end of the 72 hour period.

1.18 Startup / Demonstration

A. Operational Availability Demonstration

The OAD shall commence upon approval by the Engineer after the Integrated System Field Test has been accepted by the City and the Engineer.

The OAD shall run continuously from initiation, for 60 days, during which time the PMCS and all associated equipment (hardware and software) shall achieve a minimum of a 99.9% or better availability with no system failures.

Any system failures which occur after the initiation of the OAD shall cause the current 60 day period to be terminated and a new 60 day period started after the correction of the failure.

During the OAD the PMCS and associated equipment shall be available to plant/facility operating personnel for use in normal operation of the plant/facility.

For the purpose of the OAD the system will be defined as consisting of the following systems and components:

a. All operator interfaces

b. All Local Control Panels

c. All Local Control Stations

d. All PLCs residing in equipment controlled by the PMCS.

The conditions listed below shall constitute system failures which count towards the termination of the OAD:

e. Failure to repair a hardware and/or software problem within 120 consecutive hours from the time of notification of a system failure.

f. If the same hardware and/or software problem occurs three times or more times.

g. Software problem causing a processor to halt execution.

The following conditions shall constitute a system failure in determining the system availability based on the equation specified in this Section:

h. Failure of any non-redundant operator interface or PLC.

i. Loss of communications between devices on the communications network.

j. Failure of one or more input/output components.

k. Failure of any type affecting ten or more input/output points simultaneously.

l. Failure of any type affecting one or more regulatory control loops or sequential control strategies thereby causing a loss of the automatic control of the process variable or process sequence operation.

m. Failure of power supply. Where redundant power supplies are provided, failure of one power supply shall not constitute a system failure provided the backup power supply operates properly and maintains supply power.

n. Failure of the backup supply to operate properly and maintain supply power shall constitute a system failure.

o. Failure of three or more primary sensors/transducers or field instruments simultaneously.

B. The system availability shall be calculated based on the following equation:

$$A = ((TTO)/(TTO+TTR)) \times 100\%$$ where

a. A = system availability in percent

b. TTO = total time in operation

c. TTR = total time to repair

d. Time to repair shall be the period between the time that Contractor is notified of a system failure and the time that the system has been restored to proper operation in terms of hours with an allowance for the following dead times which shall not be counted as part of the time to repair period.

1) Actual travel time for service personnel to get to the plant site up to 6 hours per incident from the time the Contractor is notified of a system failure.

2) Time for receipt of spare parts to the plant site once requested up to 24 hours per incident.

3) No work shall be done on the system while waiting for delivery of spare parts.

4) Dead time shall not be counted as part of the system available period.

5) The dead time shall be logged and the duration of the OAD extended for an amount of time equal to the total dead time.

C. All parts and maintenance materials required to repair the system prior to completion of the OAD shall be supplied by the Contractor at no additional cost to the City.

D. If parts are obtained from the required plant spare parts inventory, they shall be replaced to provide a full complement of parts as specified.

E. A Plant Monitoring and Control System Malfunction/Repair Reporting Form shall be completed by the plant personnel and the Engineer to document system failures,

notifications to the Contractor, arrival and repair times and the Contractor repair actions. Format of the form shall be developed and agreed upon prior to the start of the OAD.

F. PMCS Upset and Recovery Testing.

The Contractor shall conduct Upset and Recovery Testing of the entire PMCS provided under this contract and all equipment monitored or controlled by the System.

URT shall prove the fault tolerance and failure response across the entire PMCS.

URT shall be performed after the OAD and shall be imitated from a steady state condition of the PMCS

URT shall continue for three consecutive workdays (three eight hour days).

URT shall consist of intentional, non-destructive shutdown and failure of portions of the PMCS equipment, and systems.

The Engineer and the City shall randomly pick individual pieces of operating equipment such as Pumps, valves, gates, instruments, controls, etc. to be disabled or tripped and process variables and set points to be modified.

The PMCS and associated equipment shall respond as specified to the upset.

PMCS and associated equipment responses shall be monitored and recorded.

Various failure modes and conditions shall be tried on all equipment.

Failure modes to be tested shall include but not be limited to:

a. closing valves

b. stopping flows

c. tripping pumps

d. emergency stops

e. set point changes

f. simulated scenarios

g. the system bypasses, etc.

h. Multiple failure scenarios shall also be tried.

i. Full manual and semiautomatic back up modes shall also be tested

j. UPS run times shall be tested and several PMCS equipment “black starts” shall be attempted to test PMCS restart capability after a prolonged power outage.

k. Workstations, servers, controllers and software shall be stopped; portions of and the entire network shall be disabled.

PMCS URT Responses

l. The PMCS must respond immediately by

m. generating the proper alarms

n. starting backup or sequential equipment

o. shutting down remaining affected equipment in accordance with the Control Strategies, programmed sequences, and safety and interlock logic.

p. All equipment and controls shall respond per design.

q. Each PLC must continue to control properly, monitor and alarm the equipment that it operates while disconnected from the PMCS.

r. Portions of the PMCS which have been be stopped shall not cause usable portions of PMCS to stop running.

PMCS URT Recording

s. Status of the PMCS shall be recorded and monitored.

Unexpected or undesirable results, or failure of PMCS to correctly respond to an upset, shall result in stopping the test, making repairs or changes, retesting the changes and then restarting the test.

1.19 Adjusting / Protection / Cleanup

A. Not Used

END OF SECTION

NO TEXT ON THIS PAGE

43 23 13.02 PUMPING UNITS

GENERAL

1.01 Summary

A. The Contractor shall provide all labor, materials, equipment and incidentals as shown, specified and required to furnish and install horizontal centrifugal close-coupled Pumping Units and appurtenances, complete and operational. This Section describes the specific requirements for horizontal centrifugal Pumping Units for water. Pumping Units shall be as specified herein and as shown on the Contract Drawings.

1.02 Payment

A. There is no separate payment provision for this Section.

1.03 Related Sections

A. Section 26 05 91 – Low Voltage - Electric Motors

1.04 References

A. ASTM A29 - Steel Bars, Carbon and Alloy, Hot-Wrought and Cold Finished, General Requirements for

B. ASTM A536 - Ductile Iron Castings

C. ASTM A743 - Castings, Iron - Chromium, Iron - Chromium - Nickel, Corrosion Resistant, for General Application

D. ASTM B505 - Copper - Base Alloy Continuous Castings

E. ANSI S2.41 - Mechanical Vibration of Large Rotating Machines with Speed Range from 10 to 200 Rev/s - Measurement and Evaluation of Mechanical Vibration Severity In-situ.

F. ANSI/ASME B1.20.1 - Pipe Threads, General Purpose (inch).

G. ANSI/ABMA 9 - Load Ratings and Fatigue Life for Ball Bearings

H. ANSI/ABMA 10 - Load Ratings and Fatigue Life for Roller Bearings

1.05 Description

A. Definition: When the term Pumping Unit is used, it shall mean a pump complete, with, but not limited to, drive motor or drive engine, connecting shafting, bearings, belts, chain, gears, gear units, couplings, accessories, appurtenances and all associated equipment. Unless otherwise specified in the individual Pumping Unit Specification Sections, the pump manufacturers shall furnish each pumping unit complete with drive motor or engine and all other components and shall be held entirely responsible for the compatibility in all respects of all components furnished.

B. Pumping Units shall be used for the following services:

Booster services for the Flushing System using city water.

C. Pumping Units shall be suitable in all respects for the service specified.

D. All materials shall be of a quality to withstand the hostile environment and stresses to which the Pumping Units and components may be subjected.

E. Design Requirements

Rate of flow at rating point: 400 GPM

Total dynamic head at rating point: 70 feet TDH

Suction head: 40 feet

Speed at rating point: 1750 RPM

Pump efficiency at rating point (minimum): 77%

Temperature, maximum 110°F

Shutoff head, approximate: 90 feet

Shutoff head plus suction head: 130 feet

Net positive suction head required at maximum rate of flow : 9 feet

Suction and discharge nozzle diameters: Suction = 4”, Discharge = 3”

Mechanical seal Type 21

Service and characteristics of electric power circuit for motor operation -460V

Motor:

a. Horsepower minimum: 15

b. Speed, maximum: 1750 RPM

c. Type:3-phase, Totally Enclosed Premium Efficiency (TEPE)

1.06 Quality Assurance

A. Not Used

1.07 Submittals

A. Contractor shall submit Shop Drawings for each pump.

B. Except for characteristic curves, all information required for each pump shall be submitted at one time. Partial submission of the following information will not be acted upon; such submissions will be held without action until the receipt of all required information.

C. No pump will be deemed approved until all specified or requested information thereon is approved.

D. Characteristic Pump Curves:

For each pump specified, except plunger type positive displacement pumps, the Contractor shall first submit for approval (or simultaneously with other required drawings, if the Contractor so desires) the characteristic curves of the proposed pump. Such curves shall be plotted on at least 8½ inch by 11 inch graph paper. For each pump (or pumping unit where overall efficiency is

specified) the following characteristic curves shall be shown as ordinates plotted against the rate of flow as abscissae for the complete range of flow of the pump:

a. Total Dynamic Head

b. Pump Efficiency

c. Brake Horsepower

d. Net Positive Suction Head*

e. Power Input to Electric Drive Motor*

f. Overall Efficiency of Pumping Unit*.

* These curves shall be furnished only when specified or when requested.

Curves shall be plotted in the units specified for the pump.

The limits of the range of rate of flow at which the pump can successfully operate shall be indicated on each curve when the operable range differs from the complete range shown. If the pump is for multi-speed service, all characteristic curves shall be shown for the maximum and for the minimum speeds specified. Approval of the characteristic pump curve shall in no way be construed to be permission to proceed with the manufacture of the pump.

Upon receipt of an approved pump curve, the Contractor shall submit, if they have not previously done so, all other drawings, material lists and other information specified, requested and/or necessary to coordinate the pumping installation with the balance of the work and to show complete compliance with all details of the Contract Documents.

E. General Arrangement Drawings: Drawings and information necessary for final design of foundations, structural supports, connected piping and valves, pump drip and bearing cooling water drainage piping, electrical connections, starting, speed regulating and protective equipment and auxiliary equipment shall be submitted for approval.

Such certificate shall state that the design shown on the drawings (except the structural design of foundations and supports which will be provided by the City or Engineer) is satisfactory to accommodate accurately and correctly the equipment to be manufactured and supplied; that if the foundations be constructed in accordance with such drawings and the equipment thereafter manufactured and supplied does not fit accurately and correctly upon such foundations, the Contractor will, at the Contractor's own cost and expense, alter, replace or rebuild such foundations to the satisfaction of the Engineer.

F. Foundation Bolt Drawings: For all pumping units, a drawing showing location, size and full details of foundation bolts for all components shall be submitted.

All weights and forces on foundation, motor support and bearing supports shall be clearly shown on such drawings, so that the structural verification by the City may be made.

Such forces shall be the maximum possible under any conditions (except those caused by water hammer in the connected piping) and shall include hydraulic, static and dynamic forces set up in any manner including the failure of any component or combination of components, such as impeller and shafting.

G. Detailed Drawings and Catalog Cuts: For all pumping units, a dimensioned assembly outline drawing or drawings of the complete pump, drive and all associated equipment furnished shall be submitted for approval.

Such drawing or drawings shall show plan, elevation and any other views or sections requested. For all pumping units a dimensioned cross-sectional drawing of the assembled pump showing full details and materials of construction shall be submitted for approval.

For pumping units powered by motors rated at twenty (20) horsepower or less, catalog cuts may be submitted to supplement the outline and cross-sectional drawings specified.

For all units furnished with steel base plates, subbases and similar components, detailed dimensioned drawings giving full information thereon shall be submitted for approval. Steel components shall be at least three-eighths (3/8) inch thick and no undrained pockets will be permitted.

H. Drawings and all other information necessary to show compliance with Section 26 05 91 – Low Voltage Electric Motors shall be submitted for approval.

I. Detailed Drainage Piping Drawings:

Detailed Shop Drawings of all pump drip and bearing cooling water drainage piping shall be submitted for approval before concrete floors are placed.

J. Certified material test reports indicating physical and mechanical properties and heat treatment (as applicable) shall be furnished for the following parts: wear rings; shafts; shaft sleeves; impellers and cast iron parts such as front and back heads, volutes, frames, covers, bearing housings. Certified material test reports on shafts shall indicate Jominy end-quench hardenability data.

K. Additional Submittals

Test Reports:

a. Test reports shall be submitted for witnessed pump shop tests, for other pump shop tests, for electric motor shop tests and for such other tests as herein specified or which may be required by the Contract Documents.

b. The Contractor shall submit the shop test results and obtain written notification by the Engineer of their acceptance of the results before equipment may be shipped to the site.

Instruction Bulletins: Six (6) bulletins giving complete instructions for installing, operating and dismantling all components of the pumping units shall be furnished.

List of spare parts being furnished.

List of special tools being furnished.

List of recommended lubricants and quantities being furnished.

Manufacturer's Certification: As a condition necessary to acceptance by the City of any pumping unit with a drive unit rated at five (5) horsepower or more, the Contractor shall deliver to the Engineer a certificate from the manufacturer, stating that:

c. The installation of the pumping unit is satisfactory.

d. Unit is ready for operation.

e. Operating personnel have been suitably instructed in the operation, lubrication and care of the unit.

L. Pump parts which are shown, specified or required to be forged, are forged and providing the lot number of said parts

M. Computations on shaft and bearing design.

N. Certified reports for shaft wearing sleeves chemical composition and hardness.

O. Computations on the pump bearing selection and details of loading.

1.08 Delivery, Storage, and Handling

A. Not Used

1.09 Spare Parts, Special Tools, and Supplies

A. The Contractor shall furnish and deliver to the Engineer, at that part of the site and at such time as the Engineer may direct, spare parts listed in the table In Section 40 61 22 , Article 1.09, E. Those parts include

1. General:

a. Two (2) sets of all eyebolts, special tools, made specifically for the pump, gages and fixtures which are required to operate, disassemble and maintain each type of pumping unit shall be furnished in neat special steel cases fitted with locks and keys.

b. All spare parts, as required by the Pumping Unit Specification Sections, shall be plainly tagged, marked for identification and reordering and shall be delivered properly boxed.

c. Where oil lubricated equipment is used, a minimum of one (1) gallon of oil of types approved by the equipment manufacturer, or sufficient oil, for a minimum of three years of operation shall be supplied, whichever is greater

d. For grease lubricated bearings, a minimum of six (6) tubes of grease or sufficient grease for a minimum of three years of operation shall be supplied, whichever is greater.

e. Two (2) sets of all eyebolts, special tools, made specifically for the pump, gages and fixtures which are required to operate, disassemble and maintain each type of pumping unit shall be furnished in neat special steel cases fitted with locks and keys.

2. For Close Coupled Pumps Only, pump repair kit consisting of the following parts at a minimum:

a. One (1) complete set of impeller and casing wearing rings, for each five (5) pumps or less of the same type, size and service furnished.

b. One (1) shaft sleeve for each five (5) pumps or less of the same type, size and service furnished.

c. One (1) impeller with keys and bolts for each five (5) pumps or less of the same type, size and service furnished.

d. One (1) complete set of mechanical seals or of packing glands complete with lantern rings and silicon bronze bolting elements for each five (5) pumps or less of the same type, size and service furnished.

e. One (1) complete set of gaskets for each and every pump furnished.

f. Packing sufficient for six (6) renewals for each and every pump furnished.

g. One (1) complete set of pump foundation mounting/anchor bolts.

h. Spare parts for motors as specified in other related.

3. Spare parts for motors as specified in other related.

1.10 Special Warranty Provisions / Guarantee Periods

A. Not Used

PRODUCTS

1.11 Manufacturers

A. Pumps shall be as manufactured by:

Goulds

Pentair, Aurora,

Or approved equal .

1.12 Materials / Equipment

A. Pump Type:

Single stage, horizontal, end suction, volute, centrifugal type, close coupled, suitable for services (4), (5) and (6) as described in Article 1.05.

B. Pump Drive Unit:

Totally enclosed, horizontal, squirrel cage, grease lubricated bearings, and single speed motor

C. Pump Casings

Casings shall be of the volute type, made of ductile iron conforming to ASTM A536, Grade 65-45-12 or as otherwise specified.

Casings shall be mounted from the pump frame or the pump motor frame and shall be provided with an end suction nozzle either integral with the casing for pumps having nozzles three (3) inches and smaller or incorporated in a separate casing suction plate.

Casing attachment to the pump frame and/or to the end plates shall be flanged, machined shouldered and bolted.

Casings shall be tapped for vent, drain and gage connections, unless the gage tappings are provided on the connected piping.

Drain tapping shall be brass plugged. Vent and gage tappings shall be for one- quarter (1/4) inch pipe size. Vent tapping shall be provided with one-quarter (1/4) inch brass petcock.

D. Pressure Gages:

Suction gages shall be of the compound type and discharge gages shall be of the pressure type.

E. Impellers

Impellers shall be of the enclosed single stage, end suction centrifugal type and shall be made of the same material as the pump casing or as otherwise specified.

Impellers shall be key-seated and securely held to the shaft by a streamlined silicon-bronze nut or by a specifically approved equal method. The arrangement shall be such that the impeller cannot unscrew or be loosened by torque from either forward or reverse rotation.

Impellers shall be statically and dynamically balanced after assembly to the rotor as covered by the following Article 1.12.F.

F. Pump Shafts

Pump shafts shall contain not less than 0.40 percent carbon and shall be of an approved high quality carbon or alloy steel conforming to the requirements of ASTM A29.

a. Shafting shall be either cold rolled or cold drawn and shall be turned.

b. Pump shafts shall be precision ground to approved tolerances at bearing races, at shaft sleeves, at impeller hub locations and at mechanical pump shaft seal locations if such seals are specified.

Pump shafts shall be sufficiently large in diameter to safely transmit the maximum torque developed by the drive unit.

c. Pump shafts shall be of such design as to provide a rigid support for the impellers and to prevent excessive vibration at all operating speeds.

d. The first critical speed of the shaft rotor, including impeller, shaft, shaft sleeve and coupling shall be not less than one hundred and fifty (150) percent of the highest rated running speed. Lateral shaft deflection, as calculated at the center line of the pump, shall not be excessive.

e. Complete computations on shaft and bearing design shall be submitted for approval before manufacture is started.

Shaft couplings shall be keyed to the shaft. Set screws or pins shall not be used to transmit torque or thrust from shafts to couplings or other shaft mounted components.

Where shafts pass through stuffing boxes and where also exposed directly to water they shall be protected by readily renewable, snug fitting wearing sleeves, internally ground to approved tolerances and positively secured to the shaft so as to prevent relative rotation. Passage of water from the pump casing between shaft and sleeve shall be prevented by "O" ring packing or other approved means.

f. Wearing sleeves shall be made of stainless steel conforming to ASTM A743, Grade CA40, which shall be heat treated to obtain a Brinell hardness of 450 to 490 through the entire sleeve.

g. Each sleeve shall be certified for chemical composition and hardness. The certified reports shall be submitted by the pump manufacturer to the Department for approval.

When mechanical seals are specified, pump shafts shall be slightly counterbored, drill spotted or be otherwise relieved at set screw locations to prevent burring of the surface by the set screw.

All shafts shall be furnished with approved all bronze or bronze and plastic water slingers of approved construction. Bronze shall conform to the requirements of ASTM B505.

After assembly of shaft, sleeve and impeller, the rotor assembly shall be statically and dynamically balanced.

G. Pump Bearings

Pump bearings shall be of the ball or roller type unless otherwise specified. Each pump shall be supported by at least two (2) bearings, one of which shall be designed to take radial and thrust loads.

a. Ball and roller bearings shall be enclosed in oil-tight housings, and equipped with approved shaft seal rings.

b. Each bearing shall be arranged for grease lubrication, unless otherwise specified.

All ball or roller bearings shall be made of vacuum degassed AISI 52100 steel, unless otherwise specified.

c. Ball or roller bearings shall be made by manufacturers who are members of the ABMA and shall be selected for a minimum rating life (L-10) of 40,000 hours based on Basic Dynamic Load Ratings calculated from ABMA formulas in ANSI/ABMA Standards 9 and 11. Provide proof of membership in ABMA or demonstrate that the standards and experience required for membership are possessed, all to the satisfaction of the City.

d. Material factors used in formula calculations shall be based on values assuming a conventional good quality, hardened bearing steel without benefit of vacuum degassing. Specifically, for pound and inch units, factor "f" shall be taken equal to 7450 for ball bearings and 49500 for roller bearings. The ratios fc/f shall be as given in the tables of the ANSI/ABMA Standards cited above.

The operating internal temperature of the bearings, with an ambient temperature of eighty (80) degrees Fahrenheit, shall not exceed one hundred and eighty (180) degrees Fahrenheit. Temperature measurements shall be made with resistance temperature detectors (RTDs). Two RTDs shall be provided for each bearing. One RTD shall be connected to a temperature monitoring system. The other RTD leads shall be brought out to a junction box as a spare. RTDs shall have an accuracy at one hundred and thirty (130) degrees Fahrenheit of plus or minus two (2) degrees Fahrenheit.

e. Temperature readings in excess of one hundred and thirty-five (135) degrees Fahrenheit, shall be deemed presumptive evidence that the operating internal temperature of the bearings exceed one hundred and eighty (180) degrees Fahrenheit, unless the Contractor can conclusively prove otherwise to the satisfaction of the Engineer.

f. In the absence of such proof, it shall be incumbent on the Contractor to take such steps as may be required to reduce the temperature to or below one hundred and thirty-five (135) degrees Fahrenheit with no additional cost to the City.

Computations on bearing selection shall be submitted for approval and shall show details of loading. A dynamic factor of at least 1.0 shall be applied to loading.

Bearings shall be accessible and designed for convenient repair and replacement.

H. Casing End Plates, and Stuffing Boxes and Mechanical Seals

Casing End Plates: The casing end plates carrying the stuffing box, or mechanical seal, shall be of the same material as the pump casing and shall be fitted to the casing, if separate from the casing, with shouldered machined faced joints and shall be dowelled to the casing.

Stuffing Boxes: The casing end plate shall be provided, unless otherwise specified, with a stuffing box of approved design to reduce leakage from the casing to a minimum and to exclude air from the casing when operating on a suction lift.

a. Each stuffing box shall be provided with a bronze gland and bronze or Teflon lantern ring, both of split construction to permit quick adjustment and easy removal of the packing. Bronze glands and lantern ring shall be of an approved composition containing not less than five (5) percent tin and not less than eighty (80) percent copper or as specified or approved.

b. Each stuffing box shall be designed for clear water sealing and furnished with sufficient depth for not less than five (5) rings of packing, of standard readily available size, and the lantern ring.

c. One ring of packing shall be glass reinforced molybdenum impregnated Teflon set at the bottom of the stuffing box.

d. Remainder of packing rings shall be a blend of tetrafluoroethylene and graphite composite primary yarn and DuPont Nomex secondary yarn.

e. Clear water for sealing shall be diverted from the casing through drilled holes in the casing and/or casing end plate leading to the stuffing box or by pipe or tubing connection from the casing to the stuffing box.

1) In any case, a small needle valve shall be furnished to control the rate of flow of seal water.

2) Stuffing box leakage shall either be collected in a suitable trough or drip catcher incorporated in the main frame or in the casing end plate and conducted to the nearest sump or gutter or dripped to a rimmed base plate.

3) Exposed drainage piping shall be not less than one-half (1/2) inch red brass pipe.

Mechanical Seals: Mechanical seals, if specified, shall comply with the requirements specified herein.

I. Couplings

Couplings for pump shafts shall be keyed and of an all steel approved type with recessed or guarded bolt and nut heads.

J. Pump Drive Units

Pump drive units shall be as required by the provisions of the Contract Documents and as specified herein. Pump drive units shall be of sufficient capacity to operate the pumps from shutoff to the maximum rate of flow specified, without loading beyond their approved rating.

The drive unit will be either a totally enclosed or explosion proof, single speed, squirrel-cage electric motor with grease lubricated bearings. Electric motors shall comply with the requirements of Section 26 05 91 – Low Voltage Electric Motors.

Motors shall be of sufficient capacity to operate the pumps from shutoff to the maximum rate of flow specified without loading beyond their rated nameplate current or power

1.13 Fabrication / Assembling / Finishes

A. Baseplates

For all direct connected pumps, pump and drive unit shall both be bolted to a substantial cast iron or fabricated steel baseplate. Surfaces on which pumps and drive units rest shall be machine finished.

a. Pumps and drive units shall be dowelled to the base after installation and alignment; sufficient metal and space for this shall be available in pumps, drive units and base.

b. A sufficient number of anchor bolts with suitable pipe sleeves shall be provided.

c. One or more holes shall be accessibly located in the bedplate and sized for pouring grout.

When provision is not made for catching stuffing box or seal drippings elsewhere, the baseplate shall be recessed or provided with raised lips to catch such drippings. The sides of the lips or recessed portion on opposite side of the pump shall be tapped for three-quarter (3/4) inch pipe and plugged.

d. The Contractor shall run three-quarter (3/4) inch red brass pipe from the most convenient tapped hole in the base to the nearest drain or gutter in an approved manner.

If, in the opinion of the Engineer, the drain piping proposed by the Contractor would constitute a tripping or other hazard if laid on or near the floor, such piping shall be run below the finished floor, even though chases have to be cut in the floor to accomplish this. Such piping shall be deemed part of the pump installation and shall be furnished at no additional cost.

B. Pump Wearing Rings

The suction side of each pump, shall be provided with a pair of readily renewable wearing rings, one fixed to the impeller, the other to the casing. The wearing faces of the rings shall form concentric cylinders.

In accordance with ASTM B505, wearing rings shall be of bizmuth brass of approved composition with approximately ten (10) percent tin and approximately seventy-five (75) percent copper, or as specified herein.

If pump design is such that axial thrust is hydraulically counterbalanced within the casing, both casing and impeller shall be provided with an additional set of wearing rings of the same material as the suction rings.

C. Pump Frames and Bearing Housing

Pump frames shall be of the same material as the pump casing, and shall be fitted to the casing or casing end plate with shouldered machined faced joints and shall be bolted and dowelled to the casing or casing end plate. The design shall be heavy and rigid, so as to safely resist, without undue distortion, all imposed forces.

The pump frame, except for close coupled pumps, shall form the housing for the pump bearings.

1.14 Source Quality Control / Shop Tests

A. Shop Tests: Shop tests shall be performed for all pumps, drive motors and drive engines in accordance with the requirements of the Contract Documents.

Witnessed hydrostatic and performance tests on pumps shall be performed when so specified and for all pumps for which a drive motor or engine rated at one hundred and twenty-five (125) horsepower or greater is required, and for all plunger type positive displacement sludge pumps.

Electric drive motors shall be shop tested as required by Section 26 05 91 – Low Voltage Electric Motors and Section 26 05 92 – Medium Voltage Electric Motors.

B. Hydrostatic Shop Tests:

All pumps shall be hydrostatically tested.

a. The test pressure for centrifugal, vortex and turbine type pumps shall be not less than one hundred and fifty (150) percent of the shutoff head as shown on the approved characteristic curve.

b. The test pressure for positive displacement pumps shall be not less than one hundred and fifty (150) percent of the maximum head specified.

If required by the Pumping Unit Specification Sections, hydrostatic tests on pumps shall be witnessed and shall be made concurrently with the performance tests.

C. Performance Shop Tests:

A performance test shall be performed for each pump, except for positive displacement pumps, during which the pump shall be run at normal rated speed over the specified range of the rate of flow and then held at shutoff head for at least one (1) minute.

a. Where synchronous motors are used for drive units, each pump so driven shall be started with the casing filled with water and against shutoff head, to prove that the motor will reach and maintain synchronous speed. A pump for which a drive motor or engine rated at one hundred and twenty-five (125) horsepower or greater is required shall be run at its maximum rating point for at least thirty (30) minutes.

b. Such test shall show that the pump has the general characteristics of head, efficiency, horsepower and such other properties as appear on the approved pump curves submittals. Such test shall also prove the specified head, efficiencies, horsepower and other properties at the rating point. Such test shall also establish that the pump is free from overheating, cavitation and excessive vibration over the specified range of the rate of flow.

c. Vibration displacement, velocity and/or acceleration readings shall be taken if specified or required at a witnessed test and the results shall be recorded. Tests at lower than maximum speed will not be required except for positive displacement plunger pumps, where runs at all speeds are required.

d. All electrical starting and other control equipment necessary for testing shall be furnished by the pump manufacturer.

At no point over the operating range of any centrifugal pump, that is, from shut-off to maximum delivery, will contact between the impeller ring and casing ring be permitted. Evidence of no contact will be required.

e. For pumps that are witnessed shop tested, the manufacturer, immediately after the pump testing, shall have the pump disassembled and shall facilitate the visual inspection of the pump rings by the official witness.

f. For pumps which are not witnessed shop tested, the manufacturer shall submit, along with the shop test results as required by Article 1.07 and the Contract Documents herein, a notarized certificate executed by a company official, stating that no contact between pump rings occurs over the full range of pump performance operation.

g. Contact between the impeller and casing rings over the operating range shall constitute grounds for rejection of the pumps.

Check tests against complete tests of pumps of exactly the same model, speed, head and capacity rating will be acceptable when the specific drive unit is rated at five (5) horsepower or less, except for plunger pumps which shall be completely tested.

Positive displacement plunger pumps shall be given a performance test of at least thirty (30) minutes duration for each speed and capacity specified to prove compliance with specified requirements and to establish that the pumping unit is free from overheating and vibration. During part of a run at maximum head and delivery specified, a plug valve on the pump discharge shall be rapidly operated manually without causing any damage to the pump as may be evidenced by a trouble free resumption of pumping at the same head and delivery and by hydrostatic test

EXECUTION

1.15 Examination / Preparation

A. Base . and Footing Adjustment

Base Installation: Equipment bases and grouting shall be installed in accordance with the following:

a. Leveling wedges or metal supports shall be installed beneath the base at each foundation bolt. Grout allowance of 3/4 to 1-1/2 inch shall be provided between the base and the top of the foundation or equipment pad.

b. Equipment shall be aligned to the connecting piping. Drive and driven equipment alignment shall be checked. Piping shall not be connected until after the grout has cured.

c. Leveling wedges or metal supports shall be adjusted to level the unit. Foundation bolts shall be tightened evenly but not too firmly. Horizontal shaft units shall be leveled to within 0.005 inches per foot and the driven equipment shaft of vertical units shall be plumb to within 0.002 inches per foot.

d. Equipment bases shall be filled with grout. Grout shall be worked to release any entrained air in the grout or base cavities.

e. Foundation bolts shall be fully tightened after the grout has cured.

Footing Adjustment: The following procedure shall be used for any driver or driven equipment having four (4) or more individual support feet:

f. All mounting bolts shall be checked for tightness before proceeding.

g. A dial indicator shall be set on the equipment base next to the foot being checked.

h. The dial indicator on the foot being checked shall be zeroed.

i. The mounting bolt on the foot being checked shall be loosened and the indicator deflection shall be noted. A maximum deflection of 0.002 inches shall be permitted.

j. The mounting bolt shall be retightened and the procedure shall be repeated for all feet.

k. Any footing condition that exceeds the 0.002 inch limit shall be corrected. The driver and driven equipment alignment shall be verified after making any corrections

1.16 Installation

A. Manufacturer's Representative

For all Pumping Units powered by drive units rated at five (5) horsepower or more, the Contractor shall furnish the services of accredited representatives of the pump manufacturer who shall supervise the installation, adjustment and field tests of each Pumping Unit and give instructions to designated DEP operating personnel.

For Pumping Units powered by drive units rated at less than five (5) horsepower, the Contractor shall furnish the services of accredited representatives of the pump manufacturer only when, in the opinion of the Engineer, some evident malfunction or over-heating makes such services necessary.

The services of the manufacturer's representative shall be furnished for at least the number of days stipulated in the associated Specification Section. Should additional days of service be necessary for a successful installation, such services shall be provided by the Contractor at no additional cost to the City.

The representative of the manufacturer shall report to the Engineer who will record the representative’s name, company and time of arrival and departure for each occasion that the representative is on the site.

B. Alignment of Pump Components and Pumping Units

Proper alignment of pump components and Pumping Units shall be maintained by shouldered fits of mating parts where such construction is at all possible and in accordance with best practice, or where the nature of such components obviates the use of shouldered fits, by dowels or turned bolts in reamed holes fitted after final alignment of parts is approved.

Assemblies of components for which alignment depends upon friction between mating parts or gaskets are unacceptable, except for the use of set screws, taper pins, certain screw threads and only those other elements for which specific approval is given by the Engineer or specified.

Shaft components transmitting torque from the shaft shall be keyed to the shaft. Set-screws or pins shall not be used in lieu of a key unless specifically approved by the Engineer.

Where the Pumping Units Specification Sections identify model or catalog numbers for pumps, the equipment shall comply with the foregoing, even though modifications of the manufacturer's standard product are necessary. Sufficient metal shall be provided on all components for field dowelling or pinning, where such is specified after final field alignment.

Mating shafts on Pumping Unit components connected by couplings shall be aligned and the components shall then be dowelled or pinned. Alignment shall be made only after complete piping and electric conduit connections have been made and all required grouting has set.

a. Alignment shall be made with an approved fixture which shall have two components. Each component shall be securely clamped to one of the mating shaft ends. Two dial indicators shall be mounted on one of the two components. One dial indicator shall be so mounted as to indicate the parallel misalignment of the two shafts; the other dial indicator shall be so mounted as to give a measurable indication of angular misalignment.

b. The Pumping Unit components shall be so adjusted and shimmed, that before and after dowelling, the maximum variations in the reading of each of the two (two) dial indicators shall not exceed one thousandth (0.001) of an inch per inch of minimum connected shaft diameter in one revolution of the coupling. Such alignment shall be demonstrated to the Engineer.

Where rigid vertical line shafting is required between a pump and its driving unit, alignment and concentricity of the line shafting shall be accomplished as follows:

c. The pump shall be completely connected to the piping, shall be levelled with a machinist's level, and bolted and grouted to the foundation. The seal ring clearance shall be checked out within the manufacturer's limits. After grout has set, seal ring clearances shall be rechecked at four quadrants.

d. The drive unit shaft shall be located concentrically by plumb bob; the drive unit shall be subsequently dowelled and bolted in final position. Special fixtures shall then be attached to the pump shaft and drive shafts. Fixtures shall accommodate a suitable taut wire, concentric with both shafts, and so arranged that the wire may be placed under controlled tension by attached weighting. Taut wire shall be passed through each intermediate bearing.

e. Each bearing and bearing mounting components shall be so adjusted so that bearings are concentric with the wire within plus or minus two thousandth (0.002) of an inch. Bearing mounting components shall then be completely dowelled so that all connections of bearings through all components are made by metal to metal fit, without reliance upon friction between mating parts.

f. Line shafting shall be concentric and each shaft section shall be dial indicated at a point midway between fixed bearings, and shall be so demonstrated to the Engineer. An eccentricity of not more than one thousandth (0.001) of an inch per inch of shaft diameter shall be permissible after pump, drive unit and all line shaft components are installed, grouted and dowelled and ready to run.

All shim stock used shall be of Type 316 stainless steel or bronze.

C. Drainage Piping Installation

Drainage piping shall be installed and connected to each Pumping Unit, to convey the stuffing box or mechanical seal drippings and bearing cooling water to the nearest sump, gutter, floor drainage pipe or outlet. Such drainage piping shall be as shown, as specified or as required to remove the drippings and/or cooling water from the pumping units without spilling on any floor area unless otherwise expressly stated or shown on the Contract Drawings.

Drainage piping from the pump to the point of disposal shall be run below the floor surface. Drainage piping shall not be run along the surface of a floor area, unless the space directly above or below the drainage piping is blocked by other piping shown on the Contract Drawings. For existing work and for new work where pump drainage piping was not installed before the floor structure was installed, chases shall be cut for the pump drainage piping and the floor finish shall be restored.

D. Oil Drip Collection Installation

Oil drip shall be collected in a steel lined sump tank below floor level if so shown or specified. Otherwise, the Contractor shall furnish two (2), two and one-half (2-1/2) gallon galvanized steel pails with handles and spouts for each oil pump furnished.

Pails shall be supported and protected from accidental upsetting by at least two (2) one-quarter (1/4) inch by two (2) inch bands bolted to the concrete pump foundation and formed in the shape of a U; concrete pump foundations shall be built sufficiently high from the floor to permit installation of the bands.

In addition, all concrete bases shall be provided with blind floor gutters entirely surrounding each base with a gutter size one (1) inch deep at the base and tapering upward and out from the base for at least six (6) inches.

E. Piping and Equipment Identification

The Contractor shall furnish and install identification signs for all pumping units, valves and piping in accordance with Section 40 05 97 - Identification for Process Equipment.

Identification signs shall be of approved size, composition, colors, lettering, location and means of mounting.

1.17 Field Testing / Quality Control

A. Field Tests: Where certain tolerances on pump shaft alignment, pump line shaft alignment and eccentricity, and on bearing alignment are herein specified, such tolerances shall be checked and demonstrated to the Engineer to be within the limits permitted. Other field tests as provided under Contract requirements shall be made on each pumping unit.

For these tests, each pump shall be run at maximum rated speed for at least three (3) rates of flow corresponding to minimum rate, rated rate and maximum rate of flows specified as evidenced by the corresponding total dynamic head shown by the pump gages; simultaneous ammeter readings shall be taken.

Variation of the rate of flow shall be made by throttling the discharge valve. The rated motor nameplate current and power shall not be exceeded at any rate of flow within the specified range.

Pumps with drive motors rated at less than five (5) horsepower shall only be tested for excess current or power when overheating or other malfunction becomes evident in general testing.

B. Field Vibration Tests:

Measurements of the vibration, witnessed by the Engineer, shall be made on all pumping units for the full specified operating range, excluding the shut-off point. The measurements shall include overall unfiltered vibration amplitude and vibration signatures. The signatures shall be plots of filtered vibration velocity in inches per second versus vibration frequency for a range of 100 to 60,000 cycles per minute.

a. For vertical pumping units with open type shafting, measurements shall be taken at locations near the two (2) motor bearings, intermediate shaft bearings, if any, and at the lower pump bearing.

b. For vertical pumps supporting drive motors, measurements need be taken only at the lower pump bearings.

c. For horizontal type pumping units, measurements shall be taken at locations near the two (2) motor bearings and at the inboard pump bearing.

An approved type of instrument, calibrated by an approved laboratory just prior to and after the test, shall be used. Certification of such calibration shall be submitted to the Engineer.

Vibration in excess of the satisfactory condition in ANSI S2.41, will not be acceptable and will be judged as presumptive evidence of unbalanced construction, or flimsy construction of the base or mounting structure, or misalignment of parts of the pumping units. The Contractor shall take all measures to remedy the condition of excessive vibration to the satisfaction of the Engineer at no additional cost to the City

1.18 Startup / Demonstration

A. Not Used

1.19 Adjusting / Protection / Cleanup

A. Not Used

END OF SECTION

SECTION ESCR-70.13MC – MICRO-PILES (GROUTED)

70.13.01 INTENT.

This section covers additional requirements and specifications for the installation of rotary-drilled cast-in-situ micro-piles as shown on the contract drawings and as directed by the Engineer.

70.13.02 DESCRIPTION.

The work consists of furnishing all necessary labor, materials and equipment to perform the work necessary to install permanent micro-piles as per the specifications described herein and as shown on the contract drawings.

The Contractor is advised that headroom clearance may be restricted and may require special pile installation equipment.

70.13.03 MATERIALS AND EQUIPMENT.

(A) Equipment

1. Klemm 704 Hydraulic Drilling Rig or approved equal
2. Hydraulic Drilling Rig/s capable of installing ESCR specified micro piles of different diameters.
3. Drilling Rods and Drill Tools
4. Grout Pump/Mixer
5. Storage Container, as required
6. Water Tanks, as required
7. Lifting Equipment, as required

(B) Material:

1. Grout: Minimum 5,000 psi at 28 days unless otherwise indicated on the contract plans.
2. Threadbar: Minimum 80 ksi, Epoxy Coated (ASTM A775/AASHTO M282 or ASTM A936 or approved equal) unless otherwise plan indicated on ESCR plan, Sections and Details.
3. Steel Shell: Minimum 45 ksi (yield strength) Minimum Outer Diameter of 9.625-inches, with a Minimum Shell Thickness of fifteen thirty-seconds (15/32) of an inch unless otherwise indicated on the contract plans.

70.13.04 SUBMITTALS

Before commencing any micro-pile installation operations the Contractor shall prepare and submit to the Engineer at least 21 days before the start of construction, for review and approval, shop drawings for micro-piles (grouted). The shop drawings shall be prepared by a NYS licensed Professional Engineer and include, but not be limited to, materials to be used, grout mix design, drilling equipment, grout mixer, grout pump, drilling fluid to be used, threadbar, pile installation log to be used and the installation to be used.

70.13.05 METHODS.

A. OVERVIEW

Install grouted piles at locations shown on contract drawing, and as directed by the Engineer.

The drilling equipment shall be a hydraulic mini-drill rig capable of a minimum of 5,000-ft-lbs of torque and 10,000lbs of crowd (pushing load). The drill shall have a self-contained hydraulic double acting cylinder grout pump capable of a minimum of 600-psi pressure and hydraulic grout mixer.

The drilling equipment shall be selected based on soil conditions and pre construction survey results to determine torque, crowd and pump size required to install each micropile type.

The diameter of the cutting shoe of the casing shall not exceed the outer diameter of the casing by more than 0.25-inch.

The pile shall be reinforced with No. 14, Grade 80, or as noted on drawings, threadbar with spacers at ten (10) feet on centers and couplers as required. Threadbar shall be epoxy coated (ASTM A775) or approved equal.

Grout shall produce a compressive strength of 4000 psi in seven (7) days. The Contractor shall design a grout mixture, which is expected to produce a 4000 psi compressive strength in seven (7) days and submit it to DDC for approval.

Grout shall be mixed thoroughly with a high-shear colloidal type mixer capable of handling a minimum of six (6) bag mix.

Grout shall be pumped using a hydraulic pump capable of 600-psi pressure and capable of a minimum of sixty (60) gallons per minute capacity.

A set of six (6) cubes of grout samples (2-inch by 2-inch) shall be taken for each day during which micro-piles are grouted. The cube samples shall be tested by an independent testing laboratory in accordance with the concrete section of the specifications.

B. QUALIFICATIONS

The work shall be performed by the Contractor or a subcontractor experienced in the specified foundation system and micropiling under similar subsurface conditions. The Contractor performing the work described in this specification shall submit proof that the Contractor or subcontractor has successfully completed a minimum of two (2) projects in the last three (3) years on which the Contractor or subcontractor has successfully designed, tested and installed micro-piles.

The Contractor shall also submit proof that the Contractor has employed a Licensed Professional Engineer, currently registered in the State of New York, having experience in the construction (designing, planning, testing and inspection phases) of at a minimum two (2) completed micropile installation projects over the past three (3) years. The Professional Engineer shall be directly responsible for the work. The Contractor shall not use manufacturers' representatives to satisfy the Contractor's responsible engineer requirements of this section.

In addition, the Engineer will review and approve the Contractor's key field personnel to be employed during installation of the micro-piles.

C. EXAMINATION OF THE SITE

Prior to starting pile installations, the Contractor shall make a documented inspection of the existing structures, site conditions, pavement and improvements within the radius of influence and adjacent to the pile installation site to examine and record their present condition.

The Contractor shall prepare a preconstruction report.

The Contractor shall fully examine the existing conditions within the project limits to ensure that the Contractor's equipment can operate without damage to or relocation of existing infrastructure, facilities or structures. The Contractor shall provide all required equipment, modified if needed to accommodate site conditions, including restricted headroom and other headroom limitations. If available, the Contractor must review the boring logs showing subsurface conditions.

The Contractor shall be required to prepare a report of all such conditions, verified by the photographs and signed by the Contractor's Professional Engineer, which shall be reviewed by the Engineer to verify the existing site conditions and all pre-existing damage that may be affected by the micro-piling work. Such work shall be included in the preconstruction report.

D. DRILLING THE PILE

The drilling procedure for the micro-piles is water flush duplex drilling or a water and polymer drilling mud mixture as necessary. Duplex drilling involves the simultaneous advancement of the casing with an approved cutting shoe and drill bit to provide temporary support to the borehole. The drill bit shall not extend closer than one (1) foot above the casing tip. A duplex drive head with ports on the sides is used to eject the flush. Water for flushing will be delivered to the duplex head via a jetting pump connected to a water hydrant or storage tank.

The use of air to remove soils from casing is not allowed.

The drill crew shall visually examine the drill spoils during installation of the pile. The Contractor shall ensure that the pile is drilled to the required depth and visually check borehole stability at all times. Where borehole instability is apparent or suspected, the Contractor shall inform the Engineer and appropriate actions shall be specified.

The final borehole depth shall be measured by the driller, checked by the Contractor and recorded on the Daily Report. On reaching the required depth, the borehole shall be water flushed to remove any remaining debris. Spoils arising from drilling and flushing of the borehole shall be deposited around the pile for disposal by the Contractor.

The Contractor shall prepare and submit to the Engineer full-length installation records for each micro-pile installed.

E. PLACING REINFORCEMENT

No. 14 all-thread reinforcing bar shall be used to reinforce each pile. The reinforcing bar shall be centralized within the borehole by wrap-round spacers. The bars shall be spliced using proprietary full strength couplers until the required depth is reached. Each length shall be hoisted into position manually or by using the lifting arm mounted on the drill rig. The lower bar shall be held in position inside the casing temporarily during splicing using the hydraulic clamp on the drill

rig or other clamping device. A 3/4-inch diameter PVC tremie pipe shall be attached to the reinforcing bar to allow grouting from the base of borehole.

F. PLACING GROUT

The Contractor shall be responsible for ensuring that sufficient cement is ordered and grout is mixed to meet contract requirements. All grout shall be mixed in accordance with the approved mix design.

The Contractor shall be responsible for ensuring that the correct method of grout placement is used and recorded. The grout shall be pumped through a tremie pipe to the base of the pile and the hole filled prior to lifting up the temporary casing. Grout shall be allowed to flow until clean grout is returned to the surface. Thereafter, the casing shall be slowly withdrawn using the drill rig while maintaining a positive grout pressure of a minimum of 50-psi. The casing shall be withdrawn to the required design depth and then pushed back two (2) feet to form the unbonded length.

The Engineer shall be immediately notified of any significant loss of grout. The Contractor shall be responsible for checking and recording the final grout level in the pile relative to the ground level or site datum on the Daily Report.

G. QUALITY ASSURANCE

An independent testing laboratory shall test each batch of grout mixed as follows: Make a set of six (6) grout cubes each day. Two (2) grout cubes each shall be tested at three (3), seven (7) and twenty-eight (28) days for compressive strength in accordance with ASTM C109.

The Contractor shall install all piles in the presence of the Engineer

H. LOAD TEST FOR MICRO PILES

Load test for micro-piles shall be in accordance with ASTM D1143 (Procedure B: Maintained Test), and as directed by the Engineer.

70.13.06 MEASUREMENT.

The quantities of micro-piles to be measured for payment shall be the number of vertical feet measured from pile tip to cutoff, furnished and permanently incorporated in the work in accordance with the plans, standards and specifications and as directed by the Engineer.

No additional payment shall be made for the use of different equipment as deemed necessary to complete the work as described herein.

Payment for static compression testing shall be per test performed. Static compression testing includes test set up, conducting the testing, and developing a report for the Engineer's review for each pile tested.

70.13.07 PRICE TO COVER.

The contract price for micro-piles shall be the unit price bid per vertical foot and shall cover the cost of all labor, materials, plant, equipment, samples, tests, shop drawings, shop drawings preparation, and insurance required and necessary to furnish, and/or install, and permanently incorporate in the work all rotary cast-in-situ micro-piles (grouted) required all in accordance with the plans, standards and specifications, and as directed by the Engineer.

Included in the contract prices hereinabove shall also be the cost for all connections and guide works.

No separate or additional payment will be made for test piles, which are not permanently incorporated into the work, for piles installed by the Contractor for temporary use, and for any other piles not permanently incorporated into the work.

The contract unit price for pile load testing shall be per test performed and reported on, and cover the cost of all labor, materials, plant, equipment, insurance, samples, and incidentals required to complete the tests in full compliance with the requirements of the specifications.

Payment will be made under:

Item No	Item	Pay Unit
ESCR-70.13MC.1275	12.750 IN. O.D. X 0.50 IN. Wall Thickness Micropile	LF
ESCR-70.13MC.1275C	Pile Loading Test for 12.750 IN. O.D. X 0.50 IN. Wall Thickness Micropile- Static Compression Test	PER TEST
ESCR-70.13MC.1600	16.000 IN. O.D. X 0.495 IN. Wall Thickness Micropile	LF
ESCR-70.13MC.1600C	Pile Loading Test for 16.000 IN. O.D. X 0.495 IN. Wall Thickness Micropile- Static Compression Test	PER TEST
ESCR-70.13MC.9625	9.625 IN. O.D. X 0.47 IN. Wall Thickness Micropile	LF
ESCR-70.13MC.9625C	Pile Loading Test for 9.625 IN. O.D. X 0.495 IN. Wall Thickness Micropile- Static Compression Test	PER TEST

END OF SECTION

SECTION ESCR-70.13MC – MICRO-PILES (GROUTED)

NO TEXT ON THIS PAGE

CONTRACT SANDRESPC

The specifications in the INTERCEPTOR GATE BUILDINGS (IGB)-Pages cover furnishing all building components and assemblies, equipment (including lighting, plumbing, HVAC, furnishings and associated works), superintendence, labor, skill, material and all other items necessary for the construction, installation, start-up and testing of the work at the Interceptor Gate Buildings as part of the East Side Coastal Resiliency Project.

The INTERCEPTOR GATE BUILDINGS Pages supplement the specifications shown on the Specifications and Standards of New York City sheet at the beginning of this Volume 3, which apply to the work except as modified in these Contract Documents.

(NO TEXT ON THIS PAGE)

TABLE OF CONTENTS

Section	Description	Page No.
Section 01 11 00	Summary of Work	1
Section 04 42 10	Exterior Stonework	7
Section 04 81 50	Glass Unit Masonry	15
Section 05 50 00	Metal Fabrications	23
Section 05 80 00	Architectural Formed Metals	35
Section 06 10 00	Rough Carpentry	43
Section 07 13 26	Self-Adhering Sheet Waterproofing	51
Section 07 19 10	Concrete Sealers	59
Section 07 19 21	Graffiti Repellents	63
Section 07 21 00	Thermal Insulation	69
Section 07 26 00	Vapor Retarders	75
Section 07 27 26	Fluid-Applied Membrane Air/Vapor Barriers	77
Section 07 42 13	Metal Roof Panels	85
Section 07 62 00	Sheet Metal Flashing and Trim	93
Section 07 92 00	Joint Sealants	105
Section 08 06 71	Door Hardware Schedule	113
Section 08 11 19	Stainless Steel Doors and Frames	115
Section 08 39 00	Watertight Hatches	123
Section 08 42 39	Removable Aluminum Flood Barriers	129
Section 08 51 13	Aluminum Windows	135
Section 08 71 00	Door Hardware	143
Section 08 80 00	Glazing	157
Section 09 29 00	Gypsum Board	169
Section 09 91 00	Interior Painting	177
Section 10 44 16	Fire Extinguishers	183
Section 10 61 00	Folding Gates	187
Section 22 05 00	Common Work Results for Plumbing – IG/PC	189
Section 22 05 17	Sleeves and Sleeve Seals For Plumbing Piping – IG/PC	195
Section 22 05 23	General Duty Valves for Plumbing Piping – IG/PC	199
Section 22 05 29	Hangers and Supports for Plumbing Piping and Equipment – IG/PC	209
Section 22 05 53	Identification for Plumbing Piping and Equipment – IG/PC	219
Section 22 07 19	Plumbing Piping Insulation – IG/PC	225
Section 22 11 16	Domestic Water Piping – IG/PC	239
Section 22 11 19	Domestic Water Piping Specialties – IG/PC	249
Section 22 13 16	Sanitary Waste and Vent Piping – IG/PC	253
Section 22 13 19	Sanitary Waste Piping Specialties – IG/PC	267

Section 23 05 93 – Testing, Adjusting, and Balancing for HVAC – IG/PC 277
Section 23 31 14 – Metal Ducts and Accessories – IG/PC 285
Section 23 34 00 – HVAC Fans - IG/PC 303
Section 23 82 39 – Unit Heaters – IG/PC 313
Section 23 05 29 – Hangers and Supports For HVAC Equipment – IG/PC 319
Section 23 05 53 – Identification for Ductwork and Equipment – IG/PC 323
Section 26 05 00 – Basic Electrical Requirements Appurtenant Works – IG/PC 327
Section 26 05 11 – General Electrical Requirements – IG/PC 337
Section 26 05 20 – Low-Voltage Wires, Cables and Accessories – IG/PC 341
Section 26 05 27 – Grounding – ESCR IG/PC 353
Section 26 05 29 – Hangers and Supports for Electrical Systems – ESCR IG/PC 357
Section 26 05 33 – Raceways and Boxes for Electrical Systems – IG/PC 361
Section 26 05 48 – Vibration and Seismic Controls for Electrical Systems – IG/PC 377
Section 26 05 73 – Power System Studies – IG/PC 399
Section 26 05 53 – Identification for Electrical Systems – IG/PC 411
Section 26 05 75 – Shock Hazard and Arc Flash Studies – IG/PC 415
Section 26 08 11 – General Electrical Testing – IG/PC 423
Section 26 09 23 – Lighting Control Devices - IG/PC 429
Section 26 22 13 – Low-Voltage Distribution Transformers – ESCR IG/PC 431
Section 26 24 16 – Panelboards – ESCR IG/PC 437
Section 26 27 26 – Wiring Devices – IG/PC 443
Section 26 29 13 – Enclosed Controllers – IG/PC 449
Section 26 29 34 - Safety Switches– IG/PC 457
Section 26 36 23 – Automatic Transfer Switches – IG/PC 459
Section 26 36 50 – Generator Connection Cabinet – IG/PC 467
Section 26 41 13 – Lightning Protection for Structures – IG/PC 471
Section 26 51 11 – Lighting Fixtures, Devices and Schedules – IG/PC 481

SECTION 01 11 00 – SUMMARY OF WORK

PART 1 - GENERAL

1.1 SUMMARY

A. General: This Section specifies a Summary of Work to be performed in accordance with the requirements of the Contract Documents and the items of Work shown on the Contract Drawings. The Work consists of furnishing all building components and assemblies, equipment, superintendence, labor, skill, material and all other items necessary for the construction, installation, start-up and testing of the work as part of the East Side Coastal Resiliency Project.

1. The work shall include

a. North Interceptor Gate Building,

b. South Interceptor Gate Building

1.2 WORK INCLUDED IN THE CONTRACT

Location: The site of the Work performed under this Contract takes place within the East Side Coastal Resiliency Project. The southern interceptor gate chamber and building will be located just south of the Corlears Hook Bridge within an existing sidewalk and lawn along the western edge of the FDR Drive right-of-way, adjacent to Corlears Hook Park. The northern interceptor gate chamber and building will be located in the right-of-way and median of the East 20th Street service road, just west of the intersection with Avenue C. The full extent of the Site and Work is shown on the drawings.

A. Items of Work: The Work covered in this and all related sections include, but is not limited to, providing all building components and assemblies, equipment, superintendence, labor, skill, material and all other items necessary for the construction, installation, start-up and testing necessary to complete this Work and do all Work incidental thereto, all in accordance with the plans and specifications, and as directed by the Engineer.

1. Additionally, included items of work hereunder shall be the installation and testing of equipment used in the operation of the Work in accordance with the plans, specifications and standards, and as directed by the Engineer.

B. Description of Work as follows:

1. North Interceptor Gate Building

a. The North Interceptor Gate Building is an approximately 695 SF single story, steel-framed building consisting of an Equipment and an Electrical Room, which together house the hydraulic, plumbing, electrical, and other associated equipment to support the below grade gate within the existing interceptor sewer. The exterior of the building will consist of a solid glass brick veneer with a granite base. Visible behind the glass brick veneer, the back-up wall will have SS paneling and aluminum framed windows. The building will have two SS exterior doors. The sloped roof will consist of coated steel flat-lock tiles and matching coping. The building is located

within a special flood hazard zone AE, and as such, will be dry-flood proofed up to the design flood elevation of +14 NAVD 88; all openings below the D.F.E. are to receive deployable flood shields. The full extent of the building is as shown on the drawings.

b. Mechanical, electrical and plumbing (MEP) work including electric heating, ventilation fans with motorized dampers/louvers, water service and distribution piping, valves, floor drains, drainage piping and house trap, exterior oil water separator, electric service switch, CT Cabinet, Meter Pan, Automatic Transfer switch, Generator plug in connections, electrical panel, lighting fixtures, occupancy sensors, receptacles, GFCI receptacles, motor controllers, conduit, wire, pull/junction boxes, supports, etc. for complete installation with testing, instruction, operations and maintenance manuals and as-built drawings.

c. Foundation requirements for the North Interceptor Gate Building are as described in the Contract Plans.

2. South Interceptor Gate Building

a. The South Interceptor Gate Building is an approximately 695 SF single story, steel-framed building consisting of an Equipment and an Electrical Room, which together house the hydraulic, plumbing, electrical, and other associated equipment to support the below grade gate within the existing interceptor sewer. The exterior of the building will consist of a solid glass brick veneer with a granite base. Visible behind the glass brick veneer, the back-up wall will have SS paneling and aluminum framed windows. The building will have two SS exterior doors. The sloped roof will consist of coated steel flat-lock tiles and matching coping. The building is located within a special flood hazard zone AE, and as such, will be dry-flood proofed up to the design flood elevation of +13 NAVD 88; all openings below the D.F.E. are to receive deployable flood shields. The full extent of the building is as shown on the drawings.

b. Mechanical, electrical and plumbing (MEP) work including electric heating, ventilation fans with motorized dampers/louvers, water service and distribution piping, valves, floor drains, drainage piping and house trap, exterior oil water separator, electric service switch, CT Cabinet, Meter Pan, Automatic Transfer switch, Generator plug in connections, electrical panel, lighting fixtures, occupancy sensors, receptacles, GFCI receptacles, motor controllers, conduit, wire, pull/junction boxes, supports, etc. for complete installation with testing, instruction, operations and maintenance manuals and as-built drawings.

c. Foundation requirements for the South Interceptor Gate Building are as described in the Contract Plans.

1.2 BUILDING PERMITS AND SPECIAL INSPECTIONS

A. The Contractor shall secure and pay for the building permit and other permits and governmental fees, and licenses necessary for execution and completion of the Work. Reference Article B14, "Special Inspection and Department of Buildings" in the S-Pages for additional requirements.

B. The Special Inspection requirements as indicated on the General Notes sheet of each project discipline. See General Notes sheets including but are not limited to the following:

1. Structural General Notes (KSE) – Sheet S-700 & S-800
2. Code & Site Information (One) – Sheets A701 & A801
3. Mechanical General Notes (WCA) – Sheet M700 & M800

PART 2 – GUARANTEES AND WARRANTIES

2.1 GUARANTEES

The Contractor shall promptly repair, replace, restore or rebuild, as the Engineer may determine, any finished Work in which defects of materials or workmanship may appear or to which damage may occur because of such defects, during the period shown in Schedule A, except for the areas of Work set forth below:

Roofing, Waterproofing, and Joint Sealant Work. For these types of work, the guarantee period shall be (2) two years.

2.2 WARRANTIES

The warranty requirements set forth in the table below are also included in the Specifications.

(1) In the event a warranty requirement set forth in the Specifications is omitted from the table below, such omission from the table below will have no effect and the Contractor's obligation to provide the manufacturer's warranty, as set forth in the Specifications, will remain in full force and effect.

(2) In the event a warranty requirement for a particular item of material or equipment is omitted from both the table below and the Specifications, and the manufacturer of such item actually provides a warranty, the Contractor shall be obligated to obtain and deliver to the Engineer the highest level of warranty actually provided by that manufacturer.

(3) In the event a warranty requirement is provided for a particular item of material or equipment, and such requirement specifies a warranty period that is longer than that which is actually provided by any of the specified manufacturers, the Contractor shall be obligated to obtain and deliver to the Engineer the highest level of warranty actually provided by any of the specified manufacturers, unless otherwise directed in writing by the Engineer.

(4) Unless indicated otherwise Warranties are to take effect on the date of Substantial Completion.

Section	Material or Equipment	Warranty Period
07 13 26	Self-Adhering Sheet Waterproofing	5 Years
07 19 10	Concrete Sealers	10 Years
07 19 21	Graffiti Repellents	2 Years
08 51 13	Aluminum Windows	3 Years
08 51 13	Glazing	10 Years
08 51 13	Metal Finish	20 Years
23 82 39	Unit Heaters	1 Year
23 34 00	HVAC Fans	1 Year
26 09 23	Lighting Control Devices	1 Year
26 24 16	Panelboards	1 Year
26 51 11	-Lighting Fixtures	1 Year

PART 3 – EXECUTION

3.1 MEASUREMENT AND PAYMENT

The contractor shall be paid the lump sum price bid for completing all the work required to be done per the contract drawings and specifications, to the satisfaction of the Engineer, as follows:

For furnishing and installing North Interceptor Gate Building in accordance with the plans, specifications and direction of the Engineer, the Contractor shall receive the lump sum bid price.

For furnishing and installing South Interceptor Gate Building in accordance with the plans, specifications and direction of the Engineer, the Contractor shall receive the lump sum bid price.

3.2 PAYMENT

The lump sum price for all items listed below shall cover the cost to provide all labor, material, plant, equipment, insurance and incidentals required for the complete installation. The lump sum price shall cover all work including but not limited to concrete, reinforcing steel, masonry, metals, wood, plastic and composites, thermal and moisture protection openings, finishes, specialties, equipment, furnishings, special construction, fire suppression, plumbing, heating, ventilation and air conditioning (HVAC), controls, electrical, communications, fire alarm systems all together with necessary incidentals as required in full compliance with the contract documents, the specifications and the direction of the Engineer. The lump sum items shall include cost for all filings, expediting, coordination, fees and compliance with all agencies and utilities service requirements including but not limited to NYC Department of Buildings (DOB), NYC Department of Environmental Protection (DEP), Con-Edison, OSHA, etc. as required. The lump sum process shall cover all work to five feet outside of structures and include flexible utility connections. The lump sum price includes excavation and backfilling and all foundation work as shown in the contract plans. Sawcutting and removal of existing asphalt, granite block and concrete materials shall be paid for under item 6.02 AAN.

Payment will be made under the following items:

Item No.	Item	Pay Unit
ESCR-501	North Interceptor Gate Building	LUMP SUM
ESCR-502	South Interceptor Gate Building	LUMP SUM

END OF SECTION

No Text On This Page

SECTION 04 42 10 – EXTERIOR STONEWORK

PART 1 - GENERAL

1.1 SUMMARY

A. Section Includes:

1. Dimension stone cladding.
2. Anchors, ties, reinforcements, and/or fasteners as required to securely anchor stone in place.
3. Accessories and hardware required for complete installation.

1.2 SUBMITTALS

A. Product Data: Submit product data that verify or are required to ensure compliance with the Contract Documents, to include technical information, shop drawings, samples, calculations, product test reports, etc.

B. Shop Drawings: Show fabrication and installation details for dimension stone cladding system, including dimensions and profiles of stone units.

1. Show locations and details of joints both within dimension stone cladding system and between dimension stone cladding system and other construction.
2. Show locations and details of fasteners, reinforcements and hardware.
3. For installed products indicated to comply with design loads, include structural analysis data signed and sealed by the qualified professional engineer responsible for their preparation.

C. Stone Samples for Verification: Sets for each color, grade, finish, and variety of stone required; not less than 12 inches square.

1. Sets shall consist of at least three Samples, exhibiting extremes of the full range of color and other visual characteristics expected and will establish the standard by which stone will be judged.

D. Material Test Reports: From a qualified independent testing agency, as follows:

1. Stone Test Reports: For stone variety proposed for use on Project, provide test data indicating compliance with required physical properties, other than abrasion resistance, according to referenced ASTM standards. Base reports on testing done within previous five years.
2. For metal components, indicate chemical and physical properties of metal.

E. Sealant Compatibility and Adhesion Test Report: From sealant manufacturer complying with requirements in Section 079200 - "Joint Sealants" and indicating that sealants will not stain or damage stone. Include interpretation of test results and

recommendations for primers and substrate preparation needed for adhesion.

1.3 QUALITY ASSURANCE

A. Fabricator Qualifications: Shop that employs skilled workers who fabricate dimension stone cladding systems similar to that required for this Project and whose products have a record of successful in-service performance.

1. Fabricator's responsibilities include fabricating dimension stone cladding and providing professional engineering services needed to assume engineering responsibility.
2. Engineering Responsibility: Comprehensive engineering analysis by a qualified professional engineer licensed in the State of New York.

B. Source Limitations for Stone: Obtain each variety of stone, from a single quarry with resources to provide materials of consistent quality in appearance and physical properties.

C. Welding: Qualify procedures and personnel according to AWS D1.1, "Structural Welding Code--Steel".

D. Sample Panels: Build sample panels to verify selections made under sample submittals and to demonstrate aesthetic effects and set quality standards for materials and execution.

1. Build sample panels of typical exterior cladding approximately 36 inches long by 24 inches high.

   a. Show typical components, mortar joint, sealant joint, anchors, and methods of installation.

2. Approval of sample panels is for color, texture, and blending of stone units; relationship of mortar and sealant colors to stone unit colors; tooling of joints; aesthetic qualities of workmanship; and other material and construction qualities specifically approved by Engineer in writing.

1.4 FIELD CONDITIONS

A. Cold-Weather Requirements: Do not use frozen materials or materials mixed or coated with ice or frost. Remove and replace dimension stone cladding damaged by frost or freezing conditions.

1. Comply with cold-weather construction and protection requirements for stone contained in ACI 530.1/ASCE 6/TMS 602.

B. Hot-Weather Requirements: Comply with hot-weather construction and protection requirements for stone contained in ACI 530.1/ASCE 6/TMS 602.

PART 2 - PRODUCTS

2.1 PERFORMANCE REQUIREMENTS

A. Structural Performance: Dimension stone shall withstand the effects of gravity loads and wind loads as indicated on the Structural Drawings, and stresses within limits and under conditions indicated according to SEI/ASCE 7 and in accordance with the City of New York Building Code.

B. Thermal Movements: Provide dimension stone cladding system that allows for thermal movements resulting from the following maximum change (range) in ambient and surface temperatures by preventing displacement of stone, opening of joints, overstressing of components, failure of joint sealants, failure of connections, and other detrimental effects. Base engineering calculation on surface temperatures of materials due to both solar heat gain and nighttime-sky heat loss.

1. Temperature Change (Range): 120 degrees F, ambient; 180 degrees F, material surfaces.

C. Safety Factors for Stone: Design dimension stone cladding system to withstand loads indicated without exceeding allowable working stress of stone determined by dividing stone's average ultimate strength, as established by testing, by the following safety factors:

1. Safety Factor for Granite: 3.

D. Design stone anchors to withstand loads indicated without exceeding allowable working stresses.

2.2 GRANITE

A. Granite: Comply with ASTM C 615.

B. Description**:** Uniform, fine to medium-grained, stone.

C. Match Engineer’s samples for color, finish, and other stone characteristics relating to aesthetic effects.

1. Basis of Design Product: Subject to compliance with requirements, provide “Barre Gray” as supplied by Polycor or equal as approved by the Engineer.
2. Finish: Waterjet Cut.
3. Thickness: As indicated on the Drawings.

D. Other Manufacturers:

1. Polycor.
2. Granite Importers.
3. Lacroix Granite.
4. Or approved equal.

2.3 MORTAR MATERIALS

A. Portland Cement: ASTM C 150, Type I or Type II, except Type III may be used for cold-weather construction. Provide white cement as required to produce custom mortar color as selected by the Engineer.

B. Hydrated Lime: ASTM C 207.

C. Portland Cement-Lime Mix: Packaged blend of portland cement complying with ASTM C 150, Type I or Type III, and hydrated lime complying with ASTM C 207.

   1. Mix shall not contain other admixtures.

D. Aggregate: ASTM C 144; use aggregate graded with 100 percent passing No. 16 sieve.

E. Water: Potable.

2.4 ACCESSORIES

A. Setting Shims: Strips of resilient plastic, nonstaining to stone, of thickness needed to prevent point loading of stone on anchors and of depths to suit anchors without intruding into required depths of pointing materials.

B. Setting Buttons: Resilient plastic buttons, nonstaining to stone, sized to suit joint thicknesses and bed depths of stone units without intruding into required depths of pointing materials.

C. Plastic Weep Hole/Vents: One-piece, flexible extrusion manufactured from UV-resistant polypropylene copolymer, designed to weep moisture in masonry cavity to exterior, in color selected from manufacturer's standard.

D. Graffitti Repellents: Refer to Section 071921 – “Graffiti Repellents” for additional requirements.

E. Sealants for Joints in Dimension Stone Cladding: Manufacturer's standard chemically curing, elastomeric sealants of base polymer and characteristics indicated below that comply with applicable requirements in Section 079200 - "Joint Sealants" and do not stain stone.

F. Mortar Net: Provide 10 inch high HDPE “Mortar Net” open mesh mortar net of width to fit masonry cavity as shown on the Drawings.

G. Access Panel: Flush-type access door; 1” flange. Stainless steel, type 316, 16 ga min, No. 4 (bright directional polish). 18” x14”; prior to ordering, contractor to confirm and coordinate size with provided product for AP1 per section 083900 and as shown on drawings.

2.5 STONE FABRICATION

A. General: Fabricate stone units in sizes and shapes required to comply with requirements indicated, including details on Drawings and Shop Drawings.

B. Control depth of stone and back check to maintain minimum clearance of 1-1/2 inches between backs of stone units and surfaces or projections of structural members, backup walls, and other work behind stone.

C. Cut and drill sinkages and holes in stone for anchors, fasteners, supports, and lifting devices as indicated or needed to set stone securely in place.

D. Cut stone to produce uniform joints 1/4 inch wide. Provide expansion control joints in 3/8 inch widths.

E. Contiguous Work: Provide reveals, reglets, openings, and similar features as required to accommodate contiguous work.

F. Clean backs of stone to remove rust stains, iron particles, and stone dust.

2.6 MORTAR MIXES

A. General: Comply with referenced standards and with manufacturers' written

instructions for mix proportions, mixing equipment, mixer speeds, mixing containers, mixing time, and other procedures needed to produce mortar of uniform quality and with optimum performance characteristics.

1. Do not use admixtures, including pigments, air-entraining agents, accelerators, retarders, water-repellent agents, antifreeze compounds, or other admixtures. Do not use calcium chloride.
2. Combine and thoroughly mix cementitious materials, water, and aggregates in a mechanical batch mixer. Discard mortar when it has reached initial set.

B. Portland Cement-Lime Setting Mortar: Comply with ASTM C 270, Proportion

Specification, for types of mortar indicated below:

1. Spot set granite with Type S mortar.

2.7 SOURCE QUALITY CONTROL

A. Source Quality-Control Testing Service: Engage a qualified independent testing agency to perform source quality-control testing indicated below.

1. Retesting of materials that fail to meet specified requirements shall be done at Contractor’s expense.
2. Furnish test specimens randomly selected from same blocks as actual materials proposed for incorporation into the Work.

3. Flexural Strength Tests: ASTM C 880, performed on specimens of same thickness, orientation of cut, and finish as installed stone. One set of test specimens is required to be tested for every 3000 sq. ft., but not fewer than 2 sets for each stone variety.
4. Freeze/Thaw Testing: Provide freeze/thaw testing per ASTM C 67 for 100 cycles with degradation. Each specimen shall be identified by quarry block, freeze/thaw preconditioning, wet or dry conditioning and loading direction.

PART 3 - EXECUTION

3.1 EXAMINATION

A. Examine surfaces to receive dimension stone cladding and conditions under which dimension stone cladding will be installed, with Installer present, for compliance with requirements for installation tolerances and other conditions affecting performance.

1. For the record, prepare written report, endorsed by Installer, listing conditions detrimental to performance of dimension stone cladding.

B. Proceed with installation only after unsatisfactory conditions have been corrected.

3.2 SETTING DIMENSION STONE CLADDING, GENERAL

A. Set stone to comply with requirements indicated on Drawings and Shop Drawings. Install dowels, pins, and other attachments indicated or necessary to provide support to stone cladding. Shim and adjust anchors, supports, and accessories to set stone accurately in locations indicated with uniform joints of widths indicated and with edges and faces aligned according to established relationships and indicated tolerances.

B. Provide expansion, control, and pressure-relieving joints of widths as required to meet performance requirements specified herein.

1. Sealing expansion and other joints is specified in Section 079200 "Joint Sealants."

C. Install concealed flashing at continuous supports and similar obstructions to downward flow of water and install weeps to divert water to building exterior.

3.3 SETTING DIMENSION STONE CLADDING

A. Attach stone securely to installed anchors and backup surfaces in a manner to maintain continuous installation. Comply with recommendations in ASTM C 1242.

B. Provide compressible filler in ends of dowel holes and bottoms of kerfs to prevent end bearing of dowels and anchor tabs on stone. Fill remainder of anchor holes and kerfs with sealant indicated for filling kerfs.

C. Set stone supported on clip angles on resilient setting shims. Use material of thickness required to maintain uniform joint widths and to prevent point loading of stone on anchors. Hold shims back from face of stone a distance at least equal to width of joint.

D. Where applicable, prepare joints and apply sealants of type and at locations indicated to comply with applicable requirements in Section 079200 - "Joint Sealants.3.4 INSTALLATION TOLERANCES

E. Variation from Plumb: For vertical lines and surfaces of walls, do not exceed 1/4 inch in 10 feet, 3/8 inch in 20 feet, or 1/2 inch in 40 feet or more. For external corners, corners and jambs within 20 feet of an entrance, expansion joints, and other conspicuous lines, do not exceed 1/8 inch in 10 feet, 1/4 inch in 20 feet, or 3/8 inch in 40 feet or more.

F. Variation of Linear Building Line: For positions shown in plan and related portions of walls and partitions, do not exceed 1/4 inch in 20 feet or 1/2 inch in 40 feet or more.

G. Variation in Joint Width: Do not vary from average joint width more than plus or minus 1/8 inch or a quarter of nominal joint width, whichever is less. For joints within 60 inches of each other, do not vary more than 1/8 inch or a quarter of nominal joint width, whichever is less from one to the other.

H. Variation in Plane between Adjacent Stone Units (Lipping): Do not exceed 1/16-inch difference between planes of adjacent units.

END OF SECTION

No Text On This Page

SECTION 04 81 50 – GLASS UNIT MASONRY

PART 1 - GENERAL

1.01 SUMMARY

A. Section Includes:

1. Glass block, solid.
2. Mortar and accessories.

1.02 SUBMITTALS

A. Product Data: For each type of product indicated. Include glass block, cementitious materials, and accessories.

B. Shop Drawings: Show fabrication and installation details for glass unit masonry, including vertical and horizontal coursing, anchors, reinforcement, and expansion strips.

C. Samples for Initial Selection: Manufacturer's actual glass-block units and joint materials involving color selection.

D. Samples for Verification: Panels consisting of 8 full-size glass-block units with mortar and sealant joints.

1. Provide Samples for each form, pattern, and color of glass block and color of joint material indicated or selected by the Engineer.

1.03 QUALITY ASSURANCE

A. Source Limitations for Glass Block: Obtain glass block through one source from a single manufacturer.

B. Source Limitations for Accessory Materials: Obtain each cementitious material admixture and accessory component through one source from a single manufacturer and each aggregate from one source or producer.

C. Mockups: Build mockups to verify selections made under sample submittals and to demonstrate aesthetic effects and set quality standards for materials and execution.

1. Build mockup of typical panel, 48 by 48 inches in size.
2. Approved mockups may become part of the completed Work if undisturbed at time of Substantial Completion.

D. Use adequate numbers of skilled workmen are thoroughly trained and experienced in the necessary crafts and who are completely familiar with the specified requirements and the methods needed for proper performance of the work of this Section.

E. Installer must have successfully completed five (5) documented glass block projects of 1,000 square feet minimum in the past 5 years.

1.04 DELIVERY, STORAGE, AND HANDLING

A. Store glass block in unopened cartons on elevated platforms, under cover, and in a dry location. If units are not stored in an enclosed location, cover tops and sides of stacks with waterproof sheeting, securely tied.

B. Store glass-block grid materials in unopened cartons in an enclosed, dry location.

C. Store cementitious materials on elevated platforms, under cover, and in a dry location. Do not use cementitious materials that have become damp.

D. Store aggregates where grading and other required characteristics can be maintained and contamination avoided.

E. Store accessories, including metal items, to prevent corrosion and accumulation of dirt and oil.

1.05 PROJECT CONDITIONS

A. Weather Limitations: Proceed with installation of glass unit masonry assemblies only when ambient and material temperatures are 40 deg F or higher.

1. Maintain temperature in installation areas at 40 deg F or above for 48 hours after installing.

1.06 SEQUENCING AND SCHEDULING

A. Sequence and coordinate completion of glass unit masonry assemblies so sealants can be installed immediately after mortar has attained final set.

PART 2 - PRODUCTS

2.01 GLASS BLOCK

A. Solid Glass Block: Colorless, transparent, solid glass blocks with smooth faces and manufacturer's standard edge coating.

1. Available Manufacturers: Subject to compliance with requirements, manufacturers offering products that may be incorporated into the Work include, but are not limited to, the following:

a. Seves Glass Block.
b. Approved equal.

2. Basis-of-Design Product: The design for solid glass block is based on “Vistabrik” solid glass block as manufactured by Seves Glass Block, or approved equal.

a. Square Size: 483.
b. Pattern: Clear.
c. Sound Transmission: 53.

2.02 MORTAR MATERIALS

A. Portland Cement: ASTM C 150, Type I or Type II, natural color, white, or a blend to produce mortar color indicated.

1. Where joints are indicated to be raked out and pointed, gray cement may be used for setting mortar.

B. Hydrated Lime: ASTM C 207, Type S.

C. Portland Cement-Lime Mix: Packaged blend of portland cement complying with ASTM C 150, Type I or Type III, and hydrated lime complying with ASTM C 207, Type S.

D. Mortar Pigments: Natural and synthetic iron oxides and chromium oxides, compounded for use in mortar mixes. Use only pigments with a record of satisfactory performance in masonry mortar.

1. Available Manufacturers: Subject to compliance with requirements, manufacturers offering products that may be incorporated into the Work include, but are not limited to, the following:

a. Bayer Corporation, Industrial Chemicals Div.; Bayferrox Iron Oxide Pigments.
b. Davis Colors; True Tone Mortar Colors.
c. Solomon Grind-Chem Services, Inc.; SGS Mortar Colors.
d. Approved equal.

E. Aggregate: ASTM C 144, with 100 percent passing No. 8 sieve.

1. For pointing mortar and joints narrower than 1/4 inch, use aggregate graded with 100 percent passing No. 16 sieve.
2. White Aggregates: Natural white sand or crushed white stone.
3. Colored Aggregates: Natural sand or crushed stone of color necessary to produce required mortar color.

a. Color: As selected by the Engineer from the manufacturer’s full line.

F. Water: Potable.

2.03 GLASS UNIT MASONRY ACCESSORIES

A. Panel Reinforcement: Ladder-type units, butt welded, not lapped and welded; complying with ASTM A 951 in straight lengths of not less than 10 feet, and as follows:

1. Hot-dip galvanized, carbon-steel wire.
2. Wire Size: W1.7 or 0.148-inch diameter.
3. Width: 1-5/8 inches.
4. Spacing of Cross Rods: Not more than 16 inches apart.

B. Fasteners, General: Unless otherwise indicated, provide Type 304 or Type 316 stainless-steel fasteners at exterior walls and zinc-plated fasteners with coating complying with ASTM B 633, Class Fe/Zn 5, at interior walls. Select fasteners for type, grade, and class required.

C. Asphalt Emulsion: Cold-applied asphalt emulsion complying with ASTM D 1187 or ASTM D 1227.

D. Sealants: Manufacturer's standard chemically curing, elastomeric sealants that comply with applicable requirements in Section 079200 "Joint Sealants."

1. Single-component, nonsag urethane sealant.
2. Provide interior sealants that have a VOC content of 250 g/L or less when calculated according to 40 CFR 59, Subpart D (EPA Method 24).

E. Sealant Accessories: Provide sealant accessories, including primers, bond-breaker tape, and cylindrical sealant backing, that comply with applicable requirements in Section 079200 "Joint Sealants."

F. Expansion Strips / Compressible Filler: 3/8 inch by 2 $^{3}/_{4}$ inches polyethylene foam or glass fiber.

G. Weld-On Rod Anchor: Stainless Steel Type 316: $^{1}/_{4}$ inch Wire Diameter: 3/8 inch Offset, 4 inch Vertical Adjustment and 9 inches overall Length.

H. Anchors: Triangular wire tie type. 3/16 inch, lengths as indicated on the Drawings.

2.04 MORTAR MIXES

A. General: Do not use admixtures, including pigments, air-entraining agents, accelerators, retarders, or antifreeze compounds, unless otherwise indicated.

1. Do not use calcium chloride in mortar.
2. For pointing mortar in exterior panels, use water-repellent admixture according to admixture manufacturer's written instructions.
3. Limit cementitious materials in mortar to portland cement and lime.

B. Mortar for Glass Unit Masonry Assemblies: Provide mortar, mixed according to glass-block manufacturer's listing with testing and inspecting agency, for fire-resistance rating indicated.

C. Colored-Aggregate Mortar: Produce required mortar color by using colored aggregates and natural color or white cement as necessary to produce required mortar color.

1. Mix to match Engineer’s sample.

PART 3 - EXECUTION

3.01 EXAMINATION

A. Examine sills, jambs, and heads surrounding glass unit masonry assemblies for compliance with requirements for installation tolerances and other conditions affecting performance.

1. Proceed with installation only after unsatisfactory conditions have been corrected.

3.02 INSTALLING GLASS BLOCK WITH MORTAR

A. Apply a heavy coat of asphalt emulsion to sill and adhere expansion strips to jambs and heads with asphalt emulsion. Allow asphalt emulsion to dry before placing mortar. Trim expansion strips to width required to fit glass block and to full lengths of heads and jambs.

B. Set glass block with completely filled bed and head joints, with no furrowing, accurately spaced and coordinated with other construction. Maintain 1/4-inch exposed joint widths, unless otherwise indicated.

C. Install panel reinforcement in horizontal joints at spacing indicated and continuously from end to end of panels; comply with the following requirements:

1. Vertical Spacing of Panel Reinforcement for Exterior Panels: 16 inches o.c., starting with first course above sill, and including the last course below the head.
2. Do not bridge expansion joints with panel reinforcement.
3. Place panel reinforcement in joints immediately above and below all openings within glass unit masonry assemblies.
4. Lap panel reinforcement not less than 6 inches if more than 1 length is necessary.
5. Embed panel reinforcement in mortar bed by placing lower half of mortar bed first, pressing panel reinforcement into place and covering with upper half of mortar bed.

D. Use rubber mallet to tap units into position. Do not use steel tools, and do not allow units to come into contact with metal accessories and frames.

E. Use plastic spacers or temporary wedges in mortar joints to produce uniform joint widths and to prevent mortar from being squeezed out of joints.

F. Keep expansion joints free of mortar.

G. Rake out joints indicated to be pointed to a uniform depth sufficient to accommodate pointing material, but not less than joint width.

1. If temporary wedges are used, remove them before raking out and pointing joints.
2. Point joints at both faces of exterior panels with mortar.
3. Point joints at both faces of exterior panels with sealant.

H. Point joints with mortar by filling raked joints and voids. Place and compact pointing mortar in layers not more than 3/8 inch thick. Compact each layer thoroughly and allow to become thumbprint hard before applying next layer.

1. Tool exposed joints slightly concave when pointing mortar is thumbprint hard. Use a smooth plastic jointer larger than joint width.

I. Clean glass unit masonry assemblies as work progresses. Remove mortar fins and smears immediately, using a clean, wet sponge or a scrub brush with stiff fiber bristles. Do not use harsh cleaners, acids, abrasives, steel wool, or wire brushes when removing mortar or cleaning glass unit masonry assemblies.

J. Install sealant at jambs, heads, mullions and other locations indicated. Prepare joints, including installation of primer and bond-breaker tape or cylindrical sealant backing, and apply elastomeric sealants to comply with requirements in Division 7 Section "Joint Sealants." Prime all locations indicated to receive joint sealant.

K. Construction Tolerances: Set glass block to comply with the following tolerances:

1. Variation from Plumb: For lines and surfaces of vertical elements and arris, do not exceed 1/4 inch in 10 feet, 3/8 inch in 20 feet, or 1/2 inch in 40 feet or more.
2. Variation from Level: For bed joints, and other conspicuous lines, do not exceed 1/4 inch in 20 feet or 1/2 inch in 40 feet or more.
3. Variation of Linear Building Line: For positions shown in plan and related portions of walls and partitions, do not exceed 1/2 inch in 20 feet or 3/4 inch in 40 feet or more.
4. Variation in Mortar-Joint Thickness: Do not vary from joint thickness indicated by more than plus or minus 1/16 inch.

3.03 CLEANING

A. On surfaces adjacent to glass unit masonry assemblies, remove mortar, sealants, and other residue resulting from glass-block installation, in a manner approved by manufacturers of materials involved.

B. Remove excess sealants with commercial solvents of type recommended by sealant manufacturer. Exercise care not to damage sealant in joints.

C. Perform final cleaning of glass unit masonry assemblies when surface is not exposed to direct sunlight. Start at top of panel using generous amounts of clean water. Remove

water with clean, dry, soft cloths; change cloths frequently to eliminate dried mortar particles and aggregate.

D. Coordinate sequences of Work to maintain access to glass surfaces to perform cleaning as described.

END OF SECTION

No Text On This Page

\

SECTION 05 50 00 – METAL FABRICATIONS

PART 1 - GENERAL

1.1 SUMMARY

A. Section Includes:

1. Steel framing and supports.
2. Steel framing and supports for mechanical and electrical equipment.
3. Steel framing and supports for applications where framing and supports are not specified in other Sections.
4. Support angles for exterior assemblies.
5. Shelf angles.
6. Loose bearing and leveling plates.
7. Steel weld plates and angles for casting into concrete not specified in other Sections.
8. Miscellaneous steel trim including steel angle corner guards steel edgings and edge angles.

B. Products furnished, but not installed, under this Section include the following:

1. Loose steel lintels.
2. Anchor bolts, steel pipe sleeves, and wedge-type inserts indicated to be cast into concrete.

1.2 PERFORMANCE REQUIREMENTS

A. Structural Performance, General: Provide metal fabrications and other items to comply with the Building Code for structural performance.

B. Thermal Movements: Provide exterior metal fabrications that allow for thermal movements resulting from the following maximum change (range) in ambient and surface temperatures by preventing buckling, opening of joints, overstressing of components, failure of connections, and other detrimental effects. Base engineering calculation on surface temperatures of materials due to both solar heat gain and nighttime-sky heat loss.

1. Temperature Change (Range): 120 deg F, ambient; 180 deg F, material surfaces

1.3 SUBMITTALS

A. Product Data: For the following:

1. Paint products.
2. Grout.

B. Shop Drawings: Show fabrication and installation details for metal fabrications.

1. Include plans, elevations, sections, and details of metal fabrications and their connections. Show anchorage and accessory items.
2. Provide setting drawings and templates for anchors and bolts specified for installation under other Sections.
3. Structural calculations for Contractor designed supports and bracing.

C. Mill Certificates: Signed by manufacturers of stainless-steel sheet certifying that products furnished comply with requirements.

D. Welding certificates.

1.4 QUALITY ASSURANCE

A. Welding: Qualify procedures and personnel according to the following:

1. AWS D1.1, "Structural Welding Code--Steel."
2. AWS D1.2, "Structural Welding Code--Aluminum."
3. AWS D1.3, "Structural Welding Code--Sheet Steel."
4. AWS D1.6, "Structural Welding Code--Stainless Steel."

B. Engineer Qualifications: Professional engineer licensed to practice in the State of New York and experienced in structural engineering of metal fabrications similar to those indicated for this Project.

1.5 PROJECT CONDITIONS

A. Field Measurements: Verify actual locations of walls and other construction contiguous with metal fabrications by field measurements before fabrication and indicate measurements on Shop Drawings.

1.6 COORDINATION

A. Coordinate installation of anchorages for metal fabrications. Furnish setting drawings, templates, and directions for installing anchorages, including sleeves, concrete inserts, anchor bolts, and items with integral anchors, that are to be embedded in concrete. Deliver such items to Project site in time for installation.
B. Coordinate installation of steel weld plates and angles for casting into concrete that are specified in this Section but required for work of another Section. Deliver such items to Project site in time for installation.
C. Coordinate all steel and iron finishes with other steel finishes exposed to view.

PART 2 - PRODUCTS

2.1 METALS, GENERAL

A. Metal Surfaces, General: Provide materials with smooth, flat surfaces, unless otherwise indicated. For metal fabrications exposed to view in the completed Work, provide materials without seam marks, roller marks, rolled trade names, or blemishes.

2.2 FERROUS METALS

A. Steel Plates, Shapes, and Bars: ASTM A 36/A 36M.

B. Stainless-Steel Sheet, Strip, Plate, and Flat Bars: ASTM A 666, Type 304.

C. Stainless-Steel Bars and Shapes: ASTM A 276, Type 304.

D. Steel Tubing: ASTM A 500, cold-formed steel tubing.

E. Steel Pipe: ASTM A 53/A 53M, standard weight (Schedule 40), unless another weight is indicated or required by structural loads.

F. Slotted Channel Framing: Cold-formed metal channels with continuous slot complying with MFMA-3.

1. Size of Channels: As indicated.
2. Material: Steel complying with ASTM A 1008/A 1008M, 0.0528-inch minimum thickness; hot-dip galvanized after fabrication.

G. Cast Iron: ASTM A 48/A 48M, Class 30, unless another class is indicated or required by structural loads.

2.3 NONFERROUS METALS

A. Aluminum Extrusions: ASTM B 221, Alloy 6063-T6.

B. Aluminum-Alloy Rolled Tread Plate: ASTM B 632/B 632M, Alloy 6061-T6.

C. Aluminum Castings: ASTM B 26/B 26M, Alloy 443.0-F.

D. Nickel Silver Extrusions: ASTM B 151/B 151M, Alloy UNS No. C74500.

2.4 FASTENERS

A. General: Unless otherwise indicated, provide Type 304 stainless-steel fasteners for exterior use and zinc-plated fasteners with coating complying with ASTM B 633, Class Fe/Zn 5, at exterior walls. Provide stainless-steel fasteners for fastening aluminum. Select fasteners for type, grade, and class required.

B. Steel Bolts and Nuts: Regular hexagon-head bolts, ASTM A 307, Grade A; with hex nuts, ASTM A 563; and, where indicated, flat washers.

C. Stainless-Steel Bolts and Nuts: Regular hexagon-head annealed stainless-steel bolts, nuts and, where indicated, flat washers; ASTM F 593 for bolts and ASTM F 594 for nuts, Alloy Group 1.

D. Anchor Bolts: ASTM F 1554, Grade 36.

1. Provide hot-dip or mechanically deposited, zinc-coated anchor bolts where item being fastened is indicated to be galvanized.

E. Eyebolts: ASTM A 489.

F. Machine Screws: ASME B18.6.3.

G. Lag Bolts: ASME B18.2.1.

H. Wood Screws: Flat head, ASME B18.6.1.

I. Plain Washers: Round, ASME B18.22.1.

J. Lock Washers: Helical, spring type, ASME B18.21.1.

K. Cast-in-Place Anchors in Concrete: Anchors capable of sustaining, without failure, a load equal to four times the load imposed, as determined by testing according to ASTM E 488, conducted by a qualified independent testing agency.

1. Threaded or wedge type; galvanized ferrous castings, either ASTM A 47/A 47M malleable iron or ASTM A 27/A 27M cast steel. Provide bolts, washers, and shims as needed, hot-dip galvanized per ASTM A 153/A 153M.

L. Expansion Anchors: Anchor bolt and sleeve assembly with capability to sustain, without failure, a load equal to four times the load imposed when installed in concrete, as determined by testing according to ASTM E 488, conducted by a qualified independent testing agency.

1. Material for Anchors in Interior Locations: Carbon-steel components zinc-plated to comply with ASTM B 633, Class Fe/Zn 5.
2. Material for Anchors in Exterior Locations: Alloy Group 1 stainless-steel bolts complying with ASTM F 593 and nuts complying with ASTM F 594.

2.5 MISCELLANEOUS MATERIALS

A. Welding Rods and Bare Electrodes: Select according to AWS specifications for metal alloy welded.

B. Shop Primers: Subject to compliance with requirements, provide one of the following:

1. “Hi-Build Epoxoline II Series N69” (Tnemec Co. Inc.); 4.0-6.0 mils d.f.t.b.
2. “Carboguard 888 Series” (Carboline Co.): 4.0 -6.0 mils. D.f.t.c.
3. “Interseal 670HS” (International Paint), 4.0-8.0 mils. Min. d.f.t.d.
4. Approved equal.

C. Galvanizing Repair Paint: High-zinc-dust-content paint for re-galvanizing welds in steel, complying with SSPC-Paint 20.

D. Bituminous Paint: Cold-applied asphalt mastic complying with SSPC-Paint 12, except containing no asbestos fibers, or cold-applied asphalt emulsion complying with ASTM D 1187.

E. Nonshrink, Nonmetallic Grout: Factory-packaged, nonstaining, noncorrosive, nongaseous grout complying with ASTM C 1107. Provide grout specifically recommended by manufacturer for interior and exterior applications.

F. Concrete Materials and Properties: Comply with requirements indicated on the Project’s Structural Contract Documents, for normal-weight, air-entrained, ready-mix concrete with a minimum 28-day compressive strength of 5000 psi, unless otherwise indicated.

2.6 FABRICATION, GENERAL

A. Shop Assembly: Preassemble items in the shop to greatest extent possible. Disassemble units only as necessary for shipping and handling limitations. Use connections that maintain structural value of joined pieces. Clearly mark units for reassembly and coordinated installation.

B. Cut, drill, and punch metals cleanly and accurately. Remove burrs and ease edges to a radius of approximately 1/32 inch, unless otherwise indicated. Remove sharp or rough areas on exposed surfaces.

C. Form bent-metal corners to smallest radius possible without causing grain separation or otherwise impairing work.

D. Form exposed work true to line and level with accurate angles and surfaces and straight edges.

E. Weld corners and seams continuously to comply with the following:

1. Use materials and methods that minimize distortion and develop strength and corrosion resistance of base metals.
2. Obtain fusion without undercut or overlap.

3. Remove welding flux immediately.
4. At exposed connections, finish exposed welds and surfaces smooth and blended so no roughness shows after finishing and contour of welded surface matches that of adjacent surface.

F. Form exposed connections with hairline joints, flush and smooth, using concealed fasteners where possible. Where exposed fasteners are required, use Phillips flat-head (countersunk) screws or bolts, unless otherwise indicated. Locate joints where least conspicuous.

G. Fabricate seams and other connections that will be exposed to weather in a manner to exclude water. Provide weep holes where water may accumulate.

H. Cut, reinforce, drill, and tap metal fabrications as indicated to receive finish hardware, screws, and similar items.

I. Provide for anchorage of type indicated; coordinate with supporting structure. Space anchoring devices to secure metal fabrications rigidly in place and to support indicated loads.

1. Where units are indicated to be cast into concrete, equip with integrally welded steel strap anchors, 1/8 by 1-1/2 inches, with a minimum 6-inch embedment and 2-inch hook, not less than 8 inches from ends and corners of units and 24 inches o.c., unless otherwise indicated.

2.7 MISCELLANEOUS FRAMING AND SUPPORTS

A. General: Provide steel framing and supports not specified in other Sections as needed to complete the Work.

B. Fabricate units from steel shapes, plates, and bars of welded construction, unless otherwise indicated. Fabricate to sizes, shapes, and profiles indicated and as necessary to receive adjacent construction retained by framing and supports. Cut, drill, and tap units to receive hardware, hangers, and similar items.

1. Fabricate units from slotted channel framing where indicated.
2. Furnish inserts if units are installed after concrete is placed.

C. Fabricate supports for operable partitions from continuous steel beams of sizes indicated with attached bearing plates, anchors, and braces as indicated. Drill bottom flanges of beams to receive partition track hanger rods; locate holes where indicated on operable partition Shop Drawings.

D. Galvanize miscellaneous framing and supports for exterior use and where indicated.

E. Prime miscellaneous framing and supports with zinc-rich primer where not to be galvanized indicated.

2.8 LOOSE STEEL LINTELS

A. Fabricate loose steel lintels from steel angles and shapes of size indicated for openings and recesses in concrete walls and partitions at locations indicated. Weld adjoining members together to form a single unit where indicated.

B. Size loose lintels to provide bearing length at each side of openings equal to 1/12 of clear span but not less than 8 inches, unless otherwise indicated.

C. Galvanize loose steel lintels located in exterior walls.

2.9 SHELF ANGLES

A. Fabricate shelf angles from steel angles of sizes indicated and for attachment to concrete framing. Provide horizontally slotted holes to receive 3/4-inch bolts, spaced not more than 6 inches from ends and 24 inches o.c., unless otherwise indicated.

1. Provide mitered and welded units at corners.
2. Provide open joints in shelf angles at expansion and control joints. Make open joint approximately 2 inches larger than expansion or control joint.

B. Provide vertical channel brackets to support angles from backup concrete.

C. Galvanize shelf angles located in exterior walls.

D. Furnish wedge-type concrete inserts, complete with fasteners, to attach shelf angles to cast-in-place concrete.

2.10 LOOSE BEARING AND LEVELING PLATES

A. Provide loose bearing and leveling plates for steel items bearing on concrete construction. Drill plates to receive anchor bolts and for grouting.

B. Galvanize plates after fabrication.

2.11 STEEL WELD PLATES AND ANGLES

A. Provide steel weld plates and angles not specified in other Sections, for items supported from concrete construction as needed to complete the Work. Provide each unit with not less than two integrally welded steel strap anchors for embedding in concrete.

2.12 MISCELLANEOUS STEEL TRIM

A. Unless otherwise indicated, fabricate units from steel shapes, plates, and bars of profiles shown with continuously welded joints and smooth exposed edges. Miter corners and use concealed field splices where possible.

B. Provide cutouts, fittings, and anchorages as needed to coordinate assembly and installation with other work.

1. Provide with integrally welded steel strap anchors for embedding in concrete construction.

C. Galvanize exterior miscellaneous steel trim and interior miscellaneous steel trim, where indicated.

D. Prime interior miscellaneous steel trim, where indicated with zinc-rich primer.

E. Provide anchors for embedding units in concrete, either integral or applied to units, as standard with manufacturer.

F. Drill for mechanical anchors and countersink. Locate not more than 4 inches from ends and not more than 12 inches o.c., evenly spaced between ends, unless otherwise indicated. Provide closer spacing if recommended by manufacturer.

1. Provide 2 rows of holes for units more than 5 inches wide, with 2 holes aligned at ends and intermediate holes staggered unless otherwise indicated.

G. Apply bituminous paint to concealed bottoms, sides, and edges of cast-metal units set into concrete.

H. Apply clear lacquer to concealed bottoms, sides, and edges of extruded units set into concrete.

2.13 FINISHES, GENERAL

A. Comply with NAAMM's "Metal Finishes Manual for Architectural and Metal Products" for recommendations for applying and designating finishes.

B. Finish metal fabrications after assembly.

2.14 STEEL AND IRON FINISHES

A. Galvanizing: Hot-dip galvanize items as indicated to comply with applicable standard listed below:

1. ASTM A 123/A 123M, for galvanizing steel and iron products.
2. ASTM A 153/A 153M, for galvanizing steel and iron hardware.

B. Preparation for Shop Priming: Prepare uncoated ferrous-metal surfaces to comply with minimum requirements indicated below for SSPC surface preparation specifications and environmental exposure conditions of installed metal fabrications:

1. Exteriors (SSPC Zone 1B): SSPC-SP 6/NACE No. 3, "Commercial Blast Cleaning."
2. Interiors (SSPC Zone 1A): SSPC-SP 3, "Power Tool Cleaning."

C. Shop Priming: Apply shop primer to uncoated surfaces of metal fabrications, except those with galvanized finishes and those to be embedded in concrete or sprayed-on fireproofing, unless otherwise indicated. Comply with SSPC-PA 1, "Paint Application Specification No. 1: Shop, Field, and Maintenance Painting of Steel," for shop painting.

1. Stripe paint corners, crevices, bolts, welds, and sharp edges.

2.15 STAINLESS-STEEL FINISHES

A. Remove tool and die marks and stretch lines or blend into finish.

B. Grind and polish surfaces to produce uniform, directionally textured, polished finish indicated, free of cross scratches. Run grain with long dimension of each piece.

C. Bright, Directional Satin Finish: No. 4, unless otherwise indicated, or as approved by the Engineer.

D. When polishing is completed, passivate and rinse surfaces. Remove embedded foreign matter and leave surfaces chemically clean.

2.16 ALUMINUM FINISHES

A. Finish designations prefixed by AA comply with the system established by the Aluminum Association for designating aluminum finishes.

B. As-Fabricated Finish: AA-M10 (Mechanical Finish: as fabricated, unspecified), unless otherwise indicated.

C. Class I, Clear Anodic Finish: AA-M12C22A41 (Mechanical Finish: nonspecular as fabricated; Chemical Finish: etched, medium matte; Anodic Coating: Architecural Class I, clear coating 0.018 mm or thicker) complying with AAMA 611, unless otherwise indicated. *ASSUMES CLEAR ANODIZED ALUMINUM FOR wt-05*

PART 3 - EXECUTION

3.1 INSTALLATION, GENERAL

A. Cutting, Fitting, and Placement: Perform cutting, drilling, and fitting required for installing metal fabrications. Set metal fabrications accurately in location, alignment, and elevation; with edges and surfaces level, plumb, true, and free of rack; and measured from established lines and levels.

B. Fit exposed connections accurately together to form hairline joints. Weld connections that are not to be left as exposed joints but cannot be shop welded because of shipping size limitations. Do not weld, cut, or abrade surfaces of exterior units that have been hot-dip galvanized after fabrication and are for bolted or screwed field connections.

C. Field Welding: Comply with the following requirements:

1. Use materials and methods that minimize distortion and develop strength and corrosion resistance of base metals.
2. Obtain fusion without undercut or overlap.
3. Remove welding flux immediately.
4. At exposed connections, finish exposed welds and surfaces smooth and blended so no roughness shows after finishing and contour of welded surface matches that of adjacent surface.

D. Fastening to In-Place Construction: Provide anchorage devices and fasteners where metal fabrications are required to be fastened to in-place construction. Provide threaded fasteners for use with concrete inserts, toggle bolts, through bolts, lag bolts, wood screws, and other connectors.

E. Provide temporary bracing or anchors in formwork for items that are to be built into concrete, or similar construction.

F. Corrosion Protection: Coat concealed surfaces of aluminum that will come into contact with grout, concrete, wood, or dissimilar metals with a heavy coat of bituminous paint.

3.2 INSTALLING MISCELLANEOUS FRAMING AND SUPPORTS

A. General: Install framing and supports to comply with requirements of items being supported, including manufacturers' written instructions and requirements indicated on Shop Drawings.

B. Anchor supports for operable partitions securely to and rigidly brace from building structure.

3.3 INSTALLING BEARING AND LEVELING PLATES

A. Clean concrete bearing surfaces of bond-reducing materials, and roughen to improve bond to surfaces. Clean bottom surface of plates.

B. Set bearing and leveling plates on wedges, shims, or leveling nuts. After bearing members have been positioned and plumbed, tighten anchor bolts. Do not remove wedges or shims but, if protruding, cut off flush with edge of bearing plate before packing with grout.

1. Use non-shrink grout, either metallic or nonmetallic, in concealed locations where not exposed to moisture; use nonshrink, nonmetallic grout in exposed locations, unless otherwise indicated.
2. Pack grout solidly between bearing surfaces and plates to ensure that no voids remain.

3.4 ADJUSTING AND CLEANING

A. Touchup Painting: Immediately after erection, clean field welds, bolted connections, and abraded areas. Paint uncoated and abraded areas with the same material as used for shop painting to comply with SSPC-PA 1 for touching up shop-painted surfaces.

1. Apply by brush or spray to provide a minimum 2.0-mil dry film thickness.

B. Galvanized Surfaces: Clean field welds, bolted connections, and abraded areas and repair galvanizing to comply with ASTM A 780.

END OF SECTION

No Text On This Page

SECTION 05 80 00 – ARCHITECTURAL FORMED METALS

PART 1 - GENERAL

1.1 SUMMARY

A. General: Provide architectural formed metals in accordance with requirements of the Contract Documents.

B. Related Work Specified Elsewhere

1. Non-architectural metal fabrications specified in Section 05 50 00 “Metal Fabrications”.

1.2 REFERENCES

A. General: Comply with the applicable provisions of the referenced standards except as modified by governing codes and the Contract Documents. Where a recommendation or suggestion occurs in the referenced standards, such recommendation or suggestion shall be considered mandatory. In the event of conflict between referenced standards, this specification or within themselves, the more stringent standard or requirement shall govern.

1. American Architectural Manufacturers Association (AAMA)

a. AAMA 2605 "Voluntary Specification, Performance Requirements and Test Procedures for Pigmented Organic Coatings on Aluminum Extrusions and Panels".

2. American Welding Society (AWI)

a. AWS D1.1 "Structural Welding Code - Steel".

b. AWS D1.3 "Structural Welding Code - Sheet Steel".

c. AWS D1.6 "Structural Welding Code - Stainless Steel".

3. National Association of Architectural Metal Manufacturers (NAAMM)

a. NAAMM "Metal Finishes Manual".

4. Industrial Fasteners Institute (IFI): "Fastener Standards Book."

1.3 SYSTEM DESCRIPTION

A. Performance Requirements

1. General: Comply with the performance requirements and criteria as specified:

a. Structural Performance: Provide for architectural metal panels capable of withstanding design loads of the Work within limits and under conditions indicated and as follows:

1) Structural requirements shall be as indicated on project structural contract document requirements.

2. Expansion and Contraction: Detail, fabricate and install exterior architectural metal component parts to provide for expansion and contraction of each assembly or system over an ambient temperature range of 120 deg. F and a surface temperature range of 180 deg. F. without buckling, joint failure, undue stress on members or anchors, and other detrimental effects on any exterior architectural metal assemblies of systems or to contiguous work by others.

3. Design Modifications: Make design modifications of work shown only as may be necessary to meet performance requirements and coordinate the work. Variations in details and materials which do not adversely affect appearance, durability or strength shall be submitted for review and approval by the Engineer. Maintain the general design concept without altering profiles and alignments shown.

1.4 SUBMITTALS

A. Product Data: Submit manufacturer's literature, specifications and installation instructions describing the general properties of each material and accessory to be used in the Work.

B. Shop Drawings: Provide shop drawings for architectural metal work, including dimensioned plans and elevations drawn at a minimum scale of 1 in. = 1 ft. and details of sections, connections and anchorage drawn at a minimum scale of 3 in. = 1 ft. Indicate materials and profiles of each architectural metal member, fittings, joinery, finishes, fasteners, and accessory items.

1. Setting Drawings: Provide setting drawings and templates for the location of architectural metal items that are to be embedded in or anchored to concrete or masonry.

C. Calculations: Provide structural calculations for items with specified design loads. Calculations shall bear the seal of a Professional Engineer registered in the State of New York.

D. Samples: Label samples to indicate product, characteristics, and location in the Work. Samples will be reviewed for color and appearance only. Furnish sufficient samples to establish the full range of colors and textures for materials exposed in the finished work. Compliance with other requirements is the responsibility of the Contractor. Provide the following:

1. Metal Panel System: 24 in. square sample complete with frame and specified finish.
2. Each finish of each metal on the gage and alloy to be used in the final work, 3 in. x 4 in.
3. Typical welded corner and butt joints.
4. Other specified items as requested.

E. Closeout Submittals: Submit the following:

1. Maintenance Manual: Submit two (2) copies of a bound maintenance manual, describing the materials, and procedures for cleaning and maintaining each metal type. Include manufacturer's data describing the materials and finishes used in the work.

F. Special Warranty Organic (Powder) Coated Finish: Provide a written Warranty for a period of (5) five years, warranting that the organic (powder) coated finish will not fade, stain or discolor excessively or to a non-uniform appearance, and will not corrode, crack, craze, peel, or deteriorate due to weather and atmospheric exposure. Upon notification of defects, within the warranty period, the Contractor must make the necessary replacements at the convenience of the City of New York.

1.5 QUALITY ASSURANCE

A. Qualified Installer: The architectural metal work shall be performed by a firm having 5 years experience in the installation of specified materials on comparable projects. The firm shall have the approval of the architectural metal materials fabricator/manufacturer. The

applicator shall provide evidence of successful completion of work of similar scope to that shown and specified for this Project using similar architectural metal systems.

B. Sole Source Responsibility: Obtain each architectural metal system from one source of a single fabricator/manufacturer. Obtain accessory products used in conjunction with architectural metal from the architectural metal fabricator/manufacturer or from sources acceptable to the architectural metal fabricator/manufacturer. The fabricator/manufacturer shall furnish evidence that the specified materials have been fabricated/manufactured by the same source and successfully utilized on a yearly basis for a minimum of 5 years on projects of a similar scope to that shown and specified for this Project.

C. Regulatory Requirements: Comply with applicable requirements of the laws, codes, ordinances and regulations of Federal, State and Municipal authorities having jurisdiction. Obtain necessary approvals from all such authorities.

D. Mock-Ups

1. Provide mock-ups of the following items consisting of all the specified components of sizes as shown:

a. Metal Panel System: One full height panel, full panel width.

1) Mock up shall include all components for one full panel and as indicated on drawings for mock-up requirements.

2. Alter or revise mock-ups, as directed, to obtain the approval of the Engineer. The approved mock-up(s) shall serve as a standard of quality for specified item(s) for the project and may remain as a permanent part of the Work if in same condition as new at time of final acceptance.

E. Pre-Installation Meetings: Prior to the start of the Work, meet at the Project site to review methods and sequence of architectural metal installation, special details and conditions, standard of workmanship, testing and quality control requirements, job organization and other pertinent topics related to the Work.

1.6 DELIVERY, STORAGE AND HANDLING

A. Packing, Shipping, Handling, and Unloading: Deliver architectural metal work fully sealed and identified.

B. Storage and Protection: Store indoors, above the floor, protected from construction activities and other sources of damage. Protect from damage from any source. Provide removable protection as required.

PART 2 - PRODUCTS

2.1 METAL MATERIALS

A. General:

1. Metal Surfaces: For the fabrication of architectural metal work which will be exposed to view, use only materials which are smooth and free of surface blemishes. Do not use materials which have stains and discolorations including welds which do not match the material, or do not match the Engineer’s sample in color and grain characteristics.

2. Surface Flatness and Edges: For exposed work provide materials which have been cold-rolled, cold-finished, cold-drawn, extruded, stretcher leveled, machine cut and

otherwise produced to the highest commercial standard for flatness with edges and corners sharp and true to angle or curvature as required.

3. Alloys and Tempers: Wherever alloys or tempers of metals are not shown or specified, or are shown or specified only by series or other general designation, provide the specific alloy which will weld and machine properly, and will finish to match the Engineer's sample and other work in the same area, which is shown or specified to have the same finish. Use the temper or hardness which will provide the greatest strength and durability, consistent with necessary forming, fabrication and finishing processes.

B. Stainless Steel

1. AISI Type 316.

a. Plate and Sheet: ASTM A666, Stretcher level sheets.

b. Bar Stock: ASTM A276.

c. Tubing: ASTM A554, Grades MT 301, MT 302, or MT 304, as standard with manufacturer.

d. Pipe: ASTM A312, Grade TP 304.

C. Steel

1. Structural Steel Shapes: ASTM A36.

2. Steel Pipe: ASTM A53, Type S, Grade B, suitable for close coiling, black finish unless galvanizing is required; standard weight (Schedule 40), unless otherwise indicated or required to satisfy performance criteria.

3. Steel Bars and Bar Size Shapes: ASTM A675, Grade 65, or ASTM A36.

4. Steel Wire: ASTM A510.

2.2 FASTENER AND ANCHORAGE MATERIALS

A. Fasteners: Stainless steel type 316, type and size best suited for its intended use. Where exposed in finished surfaces, use oval-head countersunk Phillips heads with head diameter one screw size larger than the shank diameter. Material and finish to match adjacent surfaces. Where fasteners screw-anchor into material less than 1/8 in. thick reinforce the interior surface with non-magnetic type stainless steel to receive screw threw threads or provide manufacturer's standard non-corrosive pressed-in splined grommet nuts. Provide fasteners meeting the requirements of IFI standards

B. Anchors and Inserts: Provide anchors and inserts for attachment of architectural items to masonry and concrete. Anchors and inserts shall be non-corrosive and compatible with contiguous metals.

C. Welding Electrodes: Type and alloy recommended by the producer of the metal to be welded and as required for color match, strength and compatibility in the fabricated items.

2.3 PAINT AND COATING MATERIALS

A. Dielectric Separator: Cold applied, asphalt emulsion type complying with ASTM D1187, non-sagging, resistant to severe corrosion conditions; applied in two coats for an overall minimum dry film thickness of 25 mils or heavy coating of epoxy paint in minimum 2.0 mil dry film thickness.

2.4 FABRICATION

A. Field Measurements: Prior to fabrication, verify dimensions and conditions at the job site so that architectural metal work will accurately fit to adjacent work.

B. Forming: Form work to true shapes, without distortion, with accurate surfaces and edges. Unless otherwise shown, form metal corners by bending to smallest radius possible without impairing the work. Produce flat, flush surfaces without cracking or grain separation at bends. Machine cut or saw material for butt jointed or square corners. Form simple and compound curves by bending members in jigs to produce uniform curvature for each repetitive configuration required; maintain profile of member throughout entire bend without buckling, twisting, or otherwise deforming exposed surfaces of components.

C. Assembly: Carefully fit and assemble all work with continuity of line and design, using rigidly secured joints with hairline contact, unless otherwise shown. Form butt hairline joints with roll-over edge exposed. Grind off roll-over edge flush with and matching of adjacent metal. Shop assemble all work. Disassemble units too large for shipment and provide them with alignment and splice plates for accurate field fit. Build in straps, plates, and brackets as needed to support and anchor fabricated items to adjoining construction. Reinforce formed-metal units as needed to attach and support other construction.

D. Welding: Weld with electrodes and by methods recommended by the base metal manufacturer, and in accordance with applicable recommendations of the AWS, to avoid distortion or discoloration of exposed faces. Make welds continuous unless otherwise shown. Grind exposed welds flush, to match adjacent metal. Bevel cut base metal before welding to maintain continuity of line at joints.

E. Reinforcing: Reinforce members and joints with structural shapes and plates in concealed locations, as necessary for adequate strength and rigidity.

F. Fastenings: Provide concealed fastenings unless otherwise shown. Locate necessary exposed fastenings in an orderly pattern, in accordance with reviewed shop drawings.

G. Dissimilar Metals: Separate dissimilar metals with dielectric separator to prevent galvanic action. Do not extend coatings onto exposed surfaces.

H. Protection of Finishes Prior to Shipment: Prior to shipment protect finishes on exposed surfaces from damage by application of strippable temporary protective covering or other means.

2.5 METAL PANEL SYSTEM

A. Metal Panel System: Provide stainless steel (type 316) metal panel system of dimensions, thicknesses and at locations indicated on drawings. Provide stainless steel panels, support frames, brackets and all hardware required for complete installation.

1. Basis of Design: As indicated on Drawings.

   a. Stainless steel imbeds, structural attachment components, and fasteners as required for complete installations.

2.6 METAL TRIM SYSTEM

A. Metal Trim System: Provide stainless steel (type 316) metal trim system of dimensions, thicknesses and at locations as indicated on drawings. Provide stainless steel trim, support frames, brackets and all hardware required for complete installation.

1. Basis of Design: As indicated on Drawings.

   a. Stainless steel imbeds, structural attachment components, and fasteners as required for complete installations.

2.7 MISCELLANEOUS ARCHITECTURAL METAL TRIM

A. Miscellaneous Items: Provide other items of architectural metal, exposed to view in the finished work, that is not included in other work.

B. Steel Trim: Provide stainless steel trim, exposed to view in the finished Work, fabricated from longest lengths available, 16 gauge minimum stainless steel sheet material unless noted otherwise. Form trim to profiles and dimensions shown, complete with concealed fastening devices and finished on exposed surfaces with a No. 4 (bright directional polish) metal finish, unless otherwise specified or shown.

2.8 MISCELLANEOUS ARCHITECTURAL METALWORK

A. Miscellaneous Items: Provide other items of architectural metal, exposed to view in the finished work that is not included in other work.

B. Stainless Steel Trim: Provide stainless steel trim, exposed to view in the finished work, fabricated from longest lengths available, 18 gauge minimum stainless steel sheet material unless noted otherwise. Form trim to profiles and dimensions shown, complete with concealed fastening devices and finished on all exposed surfaces with a No, 4 (bright directional polish) metal finish, unless otherwise specified or shown.

2.9 METALWORK AND FINISHES

A. General: As shown for the respective units and matching the reviewed samples. Remove scratches, abrasions, dents, dye markings and other defects prior to finishing operations. Perform this work in addition to finish treatment specified. Comply with NAAMM "Metal Finishes Manual" for finish designations and application recommendations unless otherwise specified.

B. Stainless Steel Metalwork and Finishes

1. No. 4 (bright directional polish). Grain direction as indicated on drawings. If direction not indicated, match adjacent.

C. Steel Metalwork and Finishes

1. Hot Dipped Galvanized finish.

D. Painted Ferrous Metalwork and Finish

1. Exposed surfaces shall receive hot dipped galvanized finish with high- performance paint.

2. General for painted Ferrous Metal: Hot-dipped galvanize and shop paint steel shapes and plates, except members or portions of members to be embedded in concrete, and edges to be field welded.

a. Removal of Oil, Grease and Similar Contaminants: Remove oil, grease and similar contaminants in accordance with SSPC SP-1 "Solvent Cleaning", prior to any additional surface preparation specified.

b. Metal Surfaces: Clean and prepare metal surfaces before applying shop coat. Remove rust and mill scale in accordance with SSPC SP-3 "Power Tool Cleaning".

c. Application of Primer: Immediately after surface preparation, apply primer in accordance with manufacturer's instructions. Use painting methods which will result in full coverage and dry film thickness specified.

PART 3 - EXECUTION

3.1 GENERAL

A. Manufacturer's Instructions: Prepare substrates and install the work of this Section, including equipment, components, and accessories in accordance with the manufacturer's instructions, except where more stringent requirements are shown or specified, and where project conditions require extra precautions or provisions to ensure satisfactory performance of the Work.

3.2 EXAMINATION

A. Verification of Conditions: Examine the areas to receive the Work and the conditions under which the Work would be performed. Contractor shall remedy conditions detrimental to the proper and timely completion of the Work. Do not proceed until unsatisfactory conditions have been corrected.

B. Verify dimensions of supporting structure by field measurements so that architectural metal work will be accurately designed, fabricated and fitted to the structure. Tolerances for supporting structure are specified in other Sections.

3.3 PREPARATION

A. Substrate Acceptability: Commencement of installation shall constitute acceptance of substrate conditions by the Installer.

B. Coordination: Coordinate architectural metal work with the adjacent work of other sections. Provide items to be placed during the installation of other work at the proper time to avoid delays. Coordinate placement of such items, including inserts and anchors, accurately in relation to the final location of architectural metal work.

3.4 INSTALLATION: GENERAL

A. Dimensions shown on Drawings are based on an assumed design temperature of 70 deg. F. Fabrication and erection procedures shall take into account the ambient temperature range at the time of the respective operations.

B. Procedures: Perform all cutting, drilling and fitting required. Install work in locations shown, plumb, level and in line with adjacent materials where required. Provide fastenings as shown on shop drawings, and as necessary for a rigid, secure and permanent installation. Make provisions for removable items.

1. Fasten to metal with bolts or machine screws threaded full length of the shank, with lock nuts on bolts.

2. Fasten to inserts in concrete or solid masonry, or use expansion bolts. Fasten to hollow masonry units with toggle bolts. Drill holes for bolts no larger than shank diameter.

C. Formation of Joints: Form tight joints with exposed connections accurately and uniformly fitted together. Do not cut or abrade finishes which cannot be completely restored in the field. Return items with such finishes to the shop for required alterations, followed by complete refinishing.

D. Corrosion Protection: Coat concealed surfaces of aluminum that will be in contact with grout, concrete, masonry, wood, or dissimilar metals, with a heavy coat of specified dielectric separator.

E. Metal Panel System: Comply with fabricator's written instructions and recommendations for installation and as follows:

1. Anchor metal panel system to properly prepared substrate as recommended intervals indicated on drawings. Adjust metal panels to achieve level and plumb installation.
2. Anchor metal panel system to framing utilizing appropriate fastening devices for the substrate.
3. Provide brackets and supports at locations recommended by the fabricator.
4. Install door, window, and closure panels as indicated on drawings.

F. Installation of Closures and Trim: Form closures and trim members from stainless steel sheet metal of type and minimum nominal thickness as indicated. Incorporate components required for support and installation of closures and trim. Fabricate closures and trim to tightly close with adjoining construction.

G. Provide concealed fasteners at all locations. Size fasteners to support ornamental metal Work, with fasteners spaced to prevent buckling or waviness in finished surfaces. Drill and tap holes required for securing Work to other surfaces.

H. Support joints with concealed stiffeners as required to hold exposed faces of adjoining units in flush alignment. Miter or cope trim members at corners to form tight joint.

I. Installation: Closures and Trim: Form closures and trim members from stainless steel sheet metal of type and minimum nominal thickness as indicated. Incorporate components required for support and installation of closures and trim. Fabricate closures and trim to tightly close with adjoining construction.

J. Provide concealed fasteners at all locations. Size fasteners to support work, with fasteners spaced to prevent buckling or waviness in finished surfaces. Drill and tap holes required for securing work to other surfaces.

K. Support joints with concealed stiffeners as required holding exposed faces of adjoining units in flush alignment. Miter or cope trim members at corners to form tight joint.

3.5 ADJUSTING

A. Touch-Up Painting: Field paint all marred or abraded shop paint and welds after cleaning these areas. Separate dissimilar metals and metals in contact with concrete or masonry with dielectric separator or gaskets. Do not extend coatings onto exposed surfaces.

3.6 PROTECTION

A. Protection: Upon completion of installation, clean exposed metal surfaces as recommended by manufacturer and installer. Protect finished surfaces against damage during subsequent construction operations and remove protection at time of substantial completion.

END OF SECTION

SECTION 06 10 00 – ROUGH CARPENTRY

PART 1 - GENERAL

1.1 SUMMARY

A. Section Includes:

1. Rooftop equipment bases and support curbs.
2. Wood blocking and nailers.
3. Wood furring and grounds.
4. Plywood backing panels.

1.2 DEFINITIONS

A. Boards or Strips: Lumber of less than 2 inches nominal size in least dimension.

B. Dimension Lumber: Lumber of 2 inches nominal size or greater but less than 5 inches nominal size in least dimension.

C. Timber: Lumber of 5 inches nominal size or greater in least dimension.

1.3 ACTION SUBMITTALS

A. Product Data: For each type of process and factory-fabricated product. Indicate component materials and dimensions and include construction and application details.

1. Include data for wood-preservative treatment from chemical treatment manufacturer and certification by treating plant that treated materials comply with requirements. Indicate type of preservative used and net amount of preservative retained.
2. Include data for fire-retardant treatment from chemical treatment manufacturer and certification by treating plant that treated materials comply with requirements. Include physical properties of treated materials based on testing by a qualified independent testing agency.
3. For fire-retardant treatments, include physical properties of treated lumber both before and after exposure to elevated temperatures, based on testing by a qualified independent testing agency according to ASTM D 5664.
4. For products receiving a waterborne treatment, include statement that moisture content of treated materials was reduced to levels specified before shipment to Project site.

1.4 INFORMATIONAL SUBMITTALS

A. Material Certificates: For dimension lumber specified to comply with minimum allowable unit stresses. Indicate species and grade selected for each use and design values approved by the ALSC Board of Review.

B. Evaluation Reports: For the following, from ICC-ES:

1. Wood-preservative-treated wood.
2. Fire-retardant-treated wood.
3. Power-driven fasteners.
4. Post-installed anchors.

1.5 QUALITY ASSURANCE

A. Testing Agency Qualifications: For testing agency providing classification marking for fire-retardant treated material, an inspection agency acceptable to authorities having jurisdiction that periodically performs inspections to verify that the material bearing the classification marking is representative of the material tested.

1.6 DELIVERY, STORAGE, AND HANDLING

A. Stack wood products flat with spacers beneath and between each bundle to provide air circulation. Protect wood products from weather by covering with waterproof sheeting, securely anchored. Provide for air circulation around stacks and under coverings.

PART 2 - PRODUCTS

2.1 WOOD PRODUCTS, GENERAL

A. Lumber: DOC PS 20 and applicable rules of grading agencies indicated. If no grading agency is indicated, comply with the applicable rules of any rules-writing agency certified by the ALSC Board of Review. Grade lumber by an agency certified by the ALSC Board of Review to inspect and grade lumber under the rules indicated.

1. Factory mark each piece of lumber with grade stamp of grading agency.
2. For exposed lumber indicated to receive a stained or natural finish, mark grade stamp on end or back of each piece or omit grade stamp and provide certificates of grade compliance issued by grading agency.
3. Dress lumber, S4S, unless otherwise indicated.

B. Maximum Moisture Content of Lumber: 15 percent for 2-inch nominal thickness or less; 19 percent for more than 2-inch nominal thickness unless otherwise indicated.

2.2 WOOD-PRESERVATIVE-TREATED LUMBER

A. Preservative Treatment by Pressure Process: AWPA U1; Use Category UC2 for interior construction not in contact with ground, Use Category UC3b for exterior construction not in contact with ground, and Use Category UC4a for items in contact with ground.

1. Preservative Chemicals: Acceptable to authorities having jurisdiction and containing no arsenic or chromium.
2. For exposed items indicated to receive a stained or natural finish, chemical formulations shall not require incising, contain colorants, bleed through, or otherwise adversely affect finishes.

B. Kiln-dry lumber after treatment to a maximum moisture content of 19 percent. Do not use material that is warped or that does not comply with requirements for untreated material.

C. Mark lumber with treatment quality mark of an inspection agency approved by the ALSC Board of Review.

1. For exposed lumber indicated to receive a stained or natural finish, mark end or back of each piece or omit marking and provide certificates of treatment compliance issued by inspection agency.

D. Application: Treat all rough carpentry unless otherwise indicated.

1. Wood cants, nailers, curbs, equipment support bases, blocking, stripping, and similar members in connection with roofing, flashing, vapor barriers, and waterproofing.
2. Wood blocking, and similar concealed members in contact with masonry or concrete.
3. Wood framing and furring attached directly to the interior of below-grade exterior masonry or concrete walls.

2.3 FIRE-RETARDANT-TREATED MATERIALS

A. General: Where fire-retardant-treated materials are indicated, materials shall comply with requirements in this article, that are acceptable to authorities having jurisdiction, and with fire-test-response characteristics specified as determined by testing identical products per test method indicated by a qualified testing agency.

B. Fire-Retardant-Treated Lumber and Plywood by Pressure Process: Products with a flame-spread index of 25 or less when tested according to ASTM E 84, and with no evidence of significant progressive combustion when the test is extended an additional 20 minutes, and with the flame front not extending more than 10.5 feet beyond the centerline of the burners at any time during the test.

1. Treatment shall not promote corrosion of metal fasteners.

2. Exterior Type: Treated materials shall comply with requirements specified above for fire-retardant-treated lumber and plywood by pressure process after being subjected to accelerated weathering according to ASTM D 2898. Use for exterior locations and where indicated.
3. Interior Type A: Treated materials shall have a moisture content of 28 percent or less when tested according to ASTM D 3201 at 92 percent relative humidity. Use where exterior type is not indicated.
4. Design Value Adjustment Factors: Treated lumber shall be tested according to ASTM D 5664 and design value adjustment factors shall be calculated according to ASTM D 6841.

C. Kiln-dry lumber after treatment to maximum moisture content of 19 percent.

D. Identify fire-retardant-treated wood with appropriate classification marking of qualified testing agency.

E. Application: Treat all rough carpentry unless otherwise indicated.

2.4 MISCELLANEOUS LUMBER

A. General: Provide miscellaneous lumber indicated and lumber for support or attachment of other construction, including the following:

1. Blocking.
2. Nailers.
3. Rooftop equipment bases and support curbs.
4. Grounds.
5. Utility shelving.

B. Dimension Lumber Items: Construction or No. 2 grade lumber of any of the following species:

1. Hem-fir (north); NLGA.
2. Mixed southern pine or southern pine; SPIB.
3. Spruce-pine-fir; NLGA.
4. Hem-fir; WCLIB or WWPA.
5. Spruce-pine-fir (south); NeLMA, WCLIB, or WWPA.

C. Utility Shelving: Lumber with 19 percent maximum moisture content of any of the following species and grades:

1. Eastern white pine, Idaho white, lodgepole, ponderosa, or sugar pine; Standard or No. 3 Common grade; NeLMA, NLGA, WCLIB, or WWPA.
2. Mixed southern pine or southern pine; No. 1 grade; SPIB.
3. Hem-fir or hem-fir (north); Construction or No. 2 Common grade; NLGA, WCLIB, or WWPA.
4. Spruce-pine-fir (south) or spruce-pine-fir; Construction or No. 2 Common grade; NeLMA, NLGA, WCLIB, or WWPA.

D. Concealed Boards: 19 percent maximum moisture content and any of the following species and grades:

1. Mixed southern pine or southern pine; No. 2 grade; SPIB.
2. Hem-fir or hem-fir (north); Construction or No. 2 Common grade; NLGA, WCLIB, or WWPA.
3. Spruce-pine-fir (south) or spruce-pine-fir; Construction or No. 2 Common grade; NeLMA, NLGA, WCLIB, or WWPA.
4. Eastern softwoods; No. 2 Common grade; NeLMA.
5. Northern species; No. 2 Common grade; NLGA.
6. Western woods; Construction or No. 2 Common grade; WCLIB or WWPA.

E. For blocking not used for attachment of other construction, Utility, Stud, or No. 3 grade lumber of any species may be used provided that it is cut and selected to eliminate defects that will interfere with its attachment and purpose.

F. For blocking and nailers used for attachment of other construction, select and cut lumber to eliminate knots and other defects that will interfere with attachment of other work.

G. For furring strips for installing plywood or hardboard paneling, select boards with no knots capable of producing bent-over nails and damage to paneling.

2.5 PLYWOOD BACKING PANELS

A. Equipment Backing Panels: Plywood, DOC PS 1,, fire-retardant treated, in thickness indicated or, if not indicated, not less than 1/2-inch nominal thickness.

2.6 FASTENERS

A. General: Fasteners shall be of size and type indicated and shall comply with requirements specified in this article for material and manufacture.

1. Where rough carpentry is exposed to weather, in ground contact, pressure-preservative treated, or in area of high relative humidity, provide fasteners of Type 304 stainless steel.

B. Nails, Brads, and Staples: ASTM F 1667.

C. Power-Driven Fasteners: Fastener systems with an evaluation report acceptable to authorities having jurisdiction, based on ICC-ES AC70.

D. Post-Installed Anchors: Fastener systems with an evaluation report acceptable to authorities having jurisdiction, based on ICC-ES AC01 ICC-ES AC58 ICC-ES AC193 or ICC-ES AC308 as appropriate for the substrate.

1. Material: Carbon-steel components, zinc plated to comply with ASTM B 633, Class Fe/Zn 5.

2. Material: Stainless steel with bolts and nuts complying with ASTM F 593 and ASTM F 594, Alloy Group 1 or 2.

2.7 MISCELLANEOUS MATERIALS

A. Sill-Sealer Gaskets: Glass-fiber-resilient insulation, fabricated in strip form, for use as a sill sealer; 1-inch nominal thickness, compressible to 1/32 inch; selected from manufacturer's standard widths to suit width of sill members indicated.

B. Sill-Sealer Gaskets: Closed-cell neoprene foam, 1/4 inch thick, selected from manufacturer's standard widths to suit width of sill members indicated.

C. Flexible Flashing: Composite, self-adhesive, flashing product consisting of a pliable, butyl rubber or rubberized-asphalt compound, bonded to a high-density polyethylene film, aluminum foil, or spunbonded polyolefin to produce an overall thickness of not less than 0.025 inch.

D. Adhesives for Gluing Furring to Concrete or Masonry: Formulation complying with ASTM D 3498 that is approved for use indicated by adhesive manufacturer.

E. Water-Repellent Preservative: NWWDA-tested and -accepted formulation containing 3-iodo-2-propynyl butyl carbamate, combined with an insecticide containing chloropyrifos as its active ingredient.

PART 3 - EXECUTION

3.1 INSTALLATION, GENERAL

A. Set rough carpentry to required levels and lines, with members plumb, true to line, cut, and fitted. Fit rough carpentry accurately to other construction. Locate furring, nailers, blocking, grounds, and similar supports to comply with requirements for attaching other construction.

B. Install plywood backing panels by fastening to studs; coordinate locations with utilities requiring backing panels. Install fire-retardant-treated plywood backing panels with classification marking of testing agency exposed to view.

C. Install metal framing anchors to comply with manufacturer's written instructions. Install fasteners through each fastener hole.

D. Install sill sealer gasket to form continuous seal between sill plates and foundation walls.

E. Do not splice structural members between supports unless otherwise indicated.

F. Provide blocking and framing as indicated and as required to support facing materials, fixtures, specialty items, and trim.

1. Provide metal clips for fastening gypsum board or lath at corners and intersections where framing or blocking does not provide a surface for fastening edges of panels. Space clips not more than 16 inches o.c.

G. Provide fire blocking in furred spaces, stud spaces, and other concealed cavities as indicated and as follows:

1. Fire block furred spaces of walls, at each floor level, at ceiling, and at not more than 96 inches o.c. with solid wood blocking or noncombustible materials accurately fitted to close furred spaces.
2. Fire block concealed spaces of wood-framed walls and partitions at each floor level, at ceiling line of top story, and at not more than 96 inches o.c. Where fire blocking is not inherent in framing system used, provide closely fitted solid wood blocks of same width as framing members and 2-inch nominal thickness.
3. Fire block concealed spaces between floor sleepers with same material as sleepers to limit concealed spaces to not more than 100 sq. ft. and to solidly fill space below partitions.

H. Sort and select lumber so that natural characteristics do not interfere with installation or with fastening other materials to lumber. Do not use materials with defects that interfere with function of member or pieces that are too small to use with minimum number of joints or optimum joint arrangement.

I. Comply with AWPA M4 for applying field treatment to cut surfaces of preservative-treated lumber.

1. Use inorganic boron for items that are continuously protected from liquid water.
2. Use copper naphthenate for items not continuously protected from liquid water.

J. Where wood-preservative-treated lumber is installed adjacent to metal decking, install continuous flexible flashing separator between wood and metal decking.

K. Securely attach rough carpentry work to substrate by anchoring and fastening as indicated, complying with the following:

1. Table 2304.9.1, "Fastening Schedule," in ICC's International Building Code (IBC).
2. Table R602.3(1), "Fastener Schedule for Structural Members," and Table R602.3(2), "Alternate Attachments," in ICC's International Residential Code for One- and Two-Family Dwellings.
3. ICC-ES evaluation report for fastener.

L. Use steel common nails unless otherwise indicated. Select fasteners of size that will not fully penetrate members where opposite side will be exposed to view or will receive finish materials. Make tight connections between members. Install fasteners without splitting wood. Drive nails snug but do not countersink nail heads unless otherwise indicated.

3.2 WOOD BLOCKING, AND NAILER INSTALLATION

A. Install where indicated and where required for attaching other work. Form to shapes indicated and cut as required for true line and level of attached work. Coordinate locations with other work involved.

B. Attach items to substrates to support applied loading. Recess bolts and nuts flush with surfaces unless otherwise indicated.

C. Provide permanent grounds of dressed, pressure-preservative-treated, key-beveled lumber not less than 1-1/2 inches wide and of thickness required to bring face of ground to exact thickness of finish material. Remove temporary grounds when no longer required.

3.3 PROTECTION

A. Protect wood that has been treated with inorganic boron (SBX) from weather. If, despite protection, inorganic boron-treated wood becomes wet, apply EPA-registered borate treatment. Apply borate solution by spraying to comply with EPA-registered label.

B. Protect rough carpentry from weather. If, despite protection, rough carpentry becomes wet enough that moisture content exceeds that specified, apply EPA-registered borate treatment. Apply borate solution by spraying to comply with EPA-registered label.

END OF SECTION

SECTION 07 13 26 – SELF-ADHERING SHEET WATERPROOFING

PART 1 - GENERAL

1.1 SUMMARY

A. Section Includes:

1. Adhesive-coated HDPE sheet waterproofing, for blind-side applications.
2. Insulation.
3. Drainage panels.

1.2 PERFORMANCE REQUIREMENTS

A. General: Provide foundation sheet waterproofing systems that prevent the passage of liquid water under hydrostatic pressure and comply with requirements as demonstrated by testing performed by an independent testing agency of manufacturer's current sheet membrane.

1.3 SUBMITTALS

A. Product Data: Submit manufacturer's product data including manufacturer's printed instructions for evaluating, preparing and treating waterproofing substrates, technical data, specifications and tested physical and performance properties for each waterproofing material required.

1. Include data substantiating compliance with requirements.

B. Samples: Submit 6 inch by 12 inch samples of each sheet waterproofing, protection board and auxiliary materials as requested by the Engineer.

1. Include similar sized samples of the manufacturer's standard sheet seaming and splicing details.

C. Shop Drawings: Provide shop drawings showing locations and extent of foundation waterproofing; include sheet layout drawings, flashing profiles and terminations, reglets, accessories, splicing and seaming details, substrate preparation (including details for substrate joints and cracks), penetrations, and similar conditions.

1. Provide general sheet layout drawings at 1/4 inch scale; details, flashing and similar special conditions shall be prepared at full scale.
2. Clearly identify/indicate the sub-drainage, insulations and other work not specified herein, but required for coordination purposes and the overall system success.

D. Installer Certificates: Provide installer certificates signed by primary material manufacturer certifying that Installers comply with requirements under the “Quality Assurance” Article.

E. Product Test Reports: Submit product test reports from a qualified independent testing agency evidencing compliance of waterproofing with requirements and other physical properties reported by manufacturer based on comprehensive testing of products according to current standard test methods within previous 5 years.

1.4 QUALITY ASSURANCE

A. Source Quality Control: Obtain primary waterproofing materials from a single manufacturer (regardless of conventional, or blind side application) with not less than 10 years of successful experience in foundation sheet waterproofing work and having qualified field personnel.

1. Provide secondary (accessory) materials as manufactured by the primary materials manufacturer; where secondary materials are not produced by the primary materials manufacturer, provide products recommended by the primary materials manufacturer.

B. Installer Qualifications: A firm that is approved or licensed by waterproofing manufacturer for installation of waterproofing required for this Project.

1. Installer shall have not less than 10 years of successful experience in the installation of waterproofing systems similar to those specified for this Project. The qualified installer shall also have completed 3 projects in the past 5 years similar in size and scope.

C. Mockups: Before beginning installation, install waterproofing to 100 sq. ft. of deck and wall to demonstrate surface preparation, crack and joint treatment, corner treatment, and execution quality.

1. Notify Engineer one week in advance of the date and time when mockup will be constructed.
2. Demonstrate workmanship.
3. Obtain Engineer’s approval of mockup before starting installation of Work.
4. Maintain mockup during construction in an undisturbed condition as a standard for judging the completed Work.

    a. Protect mockup from weather and from construction activities. Provide waterproof coverings for construction materials not intended to be permanently exposed to the weather.

5. Approved mockup in an undisturbed condition at the time of Substantial Completion may become part of the completed Work.

D. Preinstallation Conference: Conduct conference at Project site.

1. Review waterproofing requirements including surface preparation, substrate condition and pretreatment, minimum curing period, forecasted weather conditions, special details and sheet flashings, installation procedures, testing and inspection procedures, and protection and repairs.
2. Notify the Engineer at least 7 days before conference.

1.5 DELIVERY, STORAGE, AND HANDLING

A. Deliver liquid materials to Project site in original packages with seals unbroken, labeled with manufacturer's name, product brand name and type, date of manufacture, and directions for storing and mixing with other components.

B. Store liquid materials in their original undamaged packages in a clean, dry, protected location and within temperature range required by waterproofing manufacturer.

C. Remove and replace liquid materials that cannot be applied within their stated shelf life.

D. Store rolls according to manufacturer's written instructions.

E. Protect stored materials from direct sunlight.

1.6 PROJECT CONDITIONS

A. Environmental Limitations: Apply waterproofing within the range of ambient and substrate temperatures recommended by waterproofing manufacturer. Do not apply waterproofing to a damp or wet substrate.

1. Do not apply waterproofing in dust storms, rain, fog, or mist.

B. Maintain adequate ventilation during preparation and application of waterproofing materials.

1.7 WARRANTY

A. Special Manufacturer's Warranty: Manufacturer's standard form in which manufacturer agrees to replace waterproofing material that does not comply with requirements or that fails to remain watertight within specified warranty period.

1. Warranty does not include failure of waterproofing due to failure of substrate prepared and treated according to requirements or formation of new joints and cracks in substrate exceeding 1/16 inch in width.
2. Warranty Period: Five years.

B. Special Installer's Warranty: Specified form, signed by Installer, covering Work of this Section, for warranty period of 2 years.

1. Warranty includes removing and reinstalling protection board, drainage panels, insulation, and necessary excavation for waterproofing repairs or removal.

PART 2 - PRODUCTS

2.1 MANUFACTURERS

A. Manufacturers: Subject to compliance with requirements, available manufacturers offering products that may be incorporated into the Work include, but are not limited to the following:

1. American Hydrotech, Inc.
2. Carlisle Coatings & Waterproofing Inc.
3. WR Grace and Co.
4. Or approved equal.

B. Adhesive-Coated HDPE Sheet for Vertical Applications: 32-mil thick, uniform, flexible sheets consisting of 16-mil thick, HDPE sheet coated with a pressure-sensitive rubber adhesive, a protective adhesive coating, and a release liner.

1. Basis of Design: Subject to compliance with requirements, provide Prepruf 160R, as manufactured by W. R. Grace & Co., or approved equal.
2. Performance Criteria:

a. Tensile Strength, Film: 4000 psi minimum; ASTM D 412.
b. Low-Temperature Flexibility: Pass at minus 10 deg F; ASTM D 1970.
c. Peel Adhesion to Concrete: 5 lbf/in.; ASTM D 903, modified.
d. Lap Adhesion: 2.5 lbf/in.; ASTM D 1876, modified.
e. Hydrostatic-Head Resistance: 231 feet; ASTM D 5385, modified.
f. Vapor Permeance: 0.01 perms; ASTM E 96, Water Method.
g. Water Absorption: 0.5 percent; ASTM D 570.

C. Adhesive-Coated HDPE Sheet for Horizontal Applications: 46-mil thick, uniform, flexible sheets consisting of 30-mil thick, HDPE sheet coated with a pressure-sensitive rubber adhesive, a protective adhesive coating, a detackifying surface treatment, an uncoated self-adhering side lap strip, and a release liner.

1. Basis of Design: Subject to compliance with requirements, provide Prepruf 300R, as manufactured by W. R. Grace & Co., or approved equal.
2. Performance Criteria:

a. Tensile Strength, Film: 4000 psi minimum; ASTM D 412.
b. Low-Temperature Flexibility: Pass at minus 10 deg F; ASTM D 1970.
c. Peel Adhesion to Concrete: 5 lbf/in.; ASTM D 903, modified.
d. Lap Adhesion: 2.5 lbf/in.; ASTM D 1876, modified.
e. Hydrostatic-Head Resistance: 231 feet; ASTM D 5385, modified.
f. Vapor Permeance: 0.01 perms; ASTM E 96, Water Method.
g. Water Absorption: 0.5 percent; ASTM D 570

2.2 AUXILIARY MATERIALS

A. General: Furnish auxiliary materials recommended by waterproofing manufacturer for intended use and compatible with sheet waterproofing.

1. Furnish liquid-type auxiliary materials that comply with VOC limits of authorities having jurisdiction.

B. Primer: Liquid waterborne primer recommended for substrate by manufacturer of sheet waterproofing material.

1. Basis of Design: Grace, W. R. & Co; Bituthene Adhesive Primer B2 LVC.

C. Liquid Membrane: Elastomeric, two-component liquid, cold fluid applied, trowel grade or low viscosity.

D. Substrate Patching Membrane: Low-viscosity, two-component, asphalt-modified coating.

E. Sheet Strips: Self-adhering, rubberized-asphalt sheet strips of same material and thickness as sheet waterproofing.

F. Mastic, Adhesives, and Tape: Liquid mastic and adhesives, and adhesive tapes recommended by waterproofing manufacturer.

G. Protection Course: ASTM D 6506, semirigid sheets of fiberglass or mineral-reinforced-asphaltic core, pressure laminated between two asphalt-saturated fibrous liners and as follows:

1. Thickness: 1/4 inch, nominal.
2. Adhesive: Rubber-based solvent type recommended by waterproofing manufacturer for type of protection course.

2.3 INSULATION

A. Board Insulation: Extruded-polystyrene board insulation complying with ASTM C 578, square or shiplap edged.

1. Comply with requirements of Section 072100 "Thermal Insulation."

2.4 MOLDED-SHEET DRAINAGE PANELS

A. Nonwoven-Geotextile-Faced, Molded-Sheet Drainage Panel: Composite subsurface drainage panel consisting of a studded, nonbiodegradable, molded-plastic-sheet drainage core; with a nonwoven, needle-punched geotextile facing with an apparent opening size not exceeding No. 100 sieve laminated to one side of the core and a polymeric film bonded to the other side; and with a vertical flow rate of not to exceed 16 gpm per ft.

1. Basis of Design: Subject to compliance with requirements, provide “Hydroduct 220” as manufactured by W. R. Grace & Co., or approved equal, from one of the following:

a. American Hydrotech, Inc.

b. Carlisle Coatings & Waterproofing Inc.
c. Approved equal.

PART 3 - EXECUTION

3.1 EXAMINATION

A. Examine substrates, areas, and conditions, with Installer present, for compliance with requirements and other conditions affecting performance.

1. Verify that concrete has cured and aged for minimum time period recommended by waterproofing manufacturer.
2. Verify that concrete is visibly dry and free of moisture. Test for capillary moisture by plastic sheet method according to ASTM D 4263.
3. Proceed with installation only after unsatisfactory conditions have been corrected.

3.2 SURFACE PREPARATION

A. Clean, prepare, and treat substrates according to manufacturer's written instructions. Provide clean, dust-free, and dry substrates for waterproofing application.

B. Mask off adjoining surfaces not receiving waterproofing to prevent spillage and overspray affecting other construction.

C. Remove grease, oil, bitumen, form-release agents, paints, curing compounds, and other penetrating contaminants or film-forming coatings from concrete.

D. Remove fins, ridges, mortar, and other projections and fill honeycomb, aggregate pockets, holes, and other voids.

E. Prepare, fill, prime, and treat joints and cracks in substrates. Remove dust and dirt from joints and cracks according to ASTM D 4258.

1. Install sheet strips and center over treated construction and contraction joints and cracks exceeding a width of 1/16 inch.

F. Bridge and cover expansion joints and discontinuous deck-to-wall and deck-to-deck joints with overlapping sheet strips.

1. Invert and loosely lay first sheet strip over center of joint. Firmly adhere second sheet strip to first and overlap to substrate.

G. Corners: Prepare, prime, and treat inside and outside corners according to ASTM D 6135.

1. Install membrane strips centered over vertical inside corners. Install 3/4-inch fillets of liquid membrane on horizontal inside corners and as follows:

a. At footing-to-wall intersections, extend liquid membrane each direction from corner or install membrane strip centered over corner.
b. At plaza deck-to-wall intersections, extend liquid membrane or sheet strips onto deck waterproofing and to finished height of sheet flashing.

H. Prepare, treat, and seal vertical and horizontal surfaces at terminations and penetrations through waterproofing and at drains and protrusions according to ASTM D 6135.

3.3 MOLDED-SHEET DRAINAGE-PANEL INSTALLATION

A. Place and secure molded-sheet drainage panels against soil, with geotextile facing down, according to manufacturer's written instructions. Lap edges and ends of geotextile to maintain continuity. Protect installed molded-sheet drainage panels during subsequent construction.

3.4 INSULATION INSTALLATION

A. Install one or more layers of board insulation to achieve required thickness over prepared surfaces. Cut and fit to within 3/4 inch of projections and penetrations.

B. On vertical surfaces, set insulation units in adhesive or tape applied according to manufacturer's written instructions.

C. On horizontal surfaces, loosely lay insulation units according to manufacturer's written instructions. Stagger end joints and tightly abut insulation units.

3.5 ADHESIVE-COATED HDPE SHEET WATERPROOFING APPLICATION

A. Install adhesive-coated HDPE sheets according to manufacturer's written instructions.

B. Vertical Applications: Install adhesive-coated HDPE sheet with HDPE face against substrate. Accurately align sheets and maintain uniform 3-inch minimum lap widths and end laps. Overlap and seal seams and stagger and tape end laps to ensure watertight installation. Mechanically fasten to substrate.

1. Securely fasten top termination of membrane with continuous metal termination bar anchored into substrate and cover with detailing tape.

C. Horizontal Applications: Install adhesive-coated HDPE sheet with HDPE face against substrate. Accurately align sheets and maintain uniform 3-inch minimum lap widths and end laps. Overlap and seal seams. Overlap, stagger, and seal end laps with detail tape to ensure watertight installation.

D. Corners: Seal lapped terminations and cut edges of sheet waterproofing at inside and outside corners with detail tape.

E. Seal penetrations through sheet waterproofing to provide watertight seal with detail tape patches or wraps and a liquid-membrane troweling.

1. Include seal at sleeve penetration for below grade utilities.

F. Install sheet waterproofing and auxiliary materials to produce a continuous watertight tie into adjacent waterproofing.

G. Repair tears, voids, and lapped seams in waterproofing not complying with requirements. Tape perimeter of damaged or nonconforming area extending 6 inches beyond repaired areas in all directions. Apply a patch of sheet waterproofing and firmly secure with detail tape.

H. Correct deficiencies in or remove waterproofing that does not comply with requirements; repair substrates, reapply waterproofing, and repair sheet flashings

3.6 FIELD QUALITY CONTROL

A. Engage a full-time site representative qualified by waterproofing membrane manufacturer to inspect substrate conditions; surface preparation; membrane application, flashings, protection, and drainage components; and to furnish daily reports to Engineer.

B. Engage an independent testing agency to observe flood testing and examine underside of decks and terminations for evidence of leaks during flood testing.

3.7 PROTECTION AND CLEANING

A. Do not permit foot or vehicular traffic on unprotected membrane.

B. Protect waterproofing from damage and wear during remainder of construction period.

C. Clean spillage and soiling from adjacent construction using cleaning agents and procedures recommended by manufacturer of affected construction.

END OF SECTION

SECTION 07 19 10 – CONCRETE SEALERS

PART 1 - GENERAL

1.01 SUMMARY

A. Section Includes:

1. Single application cure-seal-hardener for new concrete floors.
2. Precautions for avoiding staining concrete before and after application.

1.02 SUBMITTALS

A. Product Data: Manufacturer's data sheets, including product specifications, test data, preparation instructions and recommendations, storage and handling requirements and recommendations, and installation methods.

B. Maintenance instructions, including precautions for avoiding staining after application.

C. Evidence satisfactory to the Engineer that the proposed applicator is currently approved by the manufacturer of the specified product.

1.03 QUALITY ASSURANCE

A. Installer Qualifications: Applicator experienced with installation of product and certified by manufacturer, or applicator experienced with similar products and providing manufacturer's field technician on site to advise on application procedures; and providing adequate number of skilled workers trained and familiar with application requirements.

1. Installer shall have a minimum of five years successful experience in the application of water-based, penetrating, concrete sealers.
2. Use an applicator currently approved in writing by the manufacturer of the specified product.

B. Manufacturer Qualifications: Engage a firm experienced in manufacturing water-based, penetrating, concrete sealers; similar to that indicated for this Project and that has a record of successful in-service performance; with a minimum of five years successful experience in the formulation of water-based, penetrating, concrete sealers similar to those specified.

1.04 COORDINATION

A. Coordinate the Work of this Section with concrete work as shown on the Structural Contract Documents.

1.05 DELIVERY, STORAGE, AND HANDLING

A. Deliver product in factory numbered and sealed drums, with numbers recorded for Engineer's record.

B. Store products in manufacturer's unopened drums until ready for installation.

1.06 PROJECT CONDITIONS

A. Take precautions to prevent staining of concrete prior to application of cure-seal-hardener and for minimum of three months after application. No satisfactory procedures are available to remove petroleum or rust stains from concrete. Prevention is therefore essential:

B. If construction equipment must be used for application, protect all components that might drip oil, hydraulic fluid, or other liquids.

1. Prohibit pipe cutting using pipe cutting machinery on concrete slab.
2. Prohibit temporary placement and storage of steel members on concrete slab.
3. Do not install products under environmental conditions outside manufacturer's absolute limits.
4. Do not use frozen material; thaw and agitate prior to use.

1.07 WARRANTY

A. Provide manufacturer's warranty that a structurally sound concrete surface prepared and treated according to the manufacturer's directions will remain permanently dust-proof, hardened and water repellent. If after the specified sealing period the treated surface does not remain dustproof, hardened and water repellent, provide, at manufacturer's expense, sufficient material to reseal defective areas.

1. Warranty Period: Ten (10) years from date of Substantial Completion.

PART 2 - PRODUCTS

2.01 MATERIALS

A. Sealer and Dustproofer: Water-based chemically-reactive penetrating sealer and

hardener free of wax, catalytically modified sodium silicate base, penetrating sealer, that seals by densifying concrete so that water molecules cannot pass through but air and water vapor can, while allowing concrete to achieve full compressive strength, minimizing surface crazing, and eliminating dusting. Compound shall be compatible with subsequent finishes and shall leave no surface residue. Compound shall not discolor paint.

1. Basis-of-Design Product: Subject to compliance with requirements, a product that may be incorporated into the Work includes, but is not limited to:

    a. SLX100 water and oil repellent; ProSoCo, Inc.
    b. Siloxa-Tek 8500: Ghostshield.
    c. S-40: Okon.
    d. Approved equal.

B. Colorless, transparent, odorless, non-toxic, non-flammable.

C. Containing no solvents or volatile organic compounds.

D. Allowing traffic on floors within 2 to 3 hours, with chemical process complete within 3 months.

E. No change to surface appearance except a sheen developed due to traffic and cleaning.

F. Water: Clean, potable.

PART 3 - EXECUTION

3.01 EXAMINATION

A. Do not begin installation until substrates have been properly prepared and are suitable for application of product.

B. If substrate preparation is the responsibility of another installer, notify the Engineer of unsatisfactory preparation before proceeding.

3.02 PREPARATION

A. Clean surfaces thoroughly prior to installation.

B. Prepare surfaces using the methods recommended by the manufacturer for achieving the best result for the substrate under the project conditions.

3.03 INSTALLATION

A. Install in accordance with manufacturer's instructions.

B. If this is the applicator's first project using this product, provide the manufacturer's technical representative on-site to familiarize installers with proper procedures.

C. Prevent damage to and soiling of adjacent work.

D. New Concrete: Apply cure-seal-hardener to new concrete as soon as the concrete is firm enough to work on after troweling, except on colored concrete wait minimum of 30 days.

E. Spray on at rate as recommended by manufacturer.

F. Thoroughly remove laitance, oil, and other contaminants.

G. Saturate surface with cure-seal-hardener; respray or broom excess onto dry spots.

3.04 PROTECTION

A. Protect installed floors until chemical reaction process is complete; at least three months.

B. Comply with precautions listed under 1.06 Project Conditions.

C. Clean floor regularly in accordance with manufacturer's recommendations because water will accelerate the sealing and scrubbing will impart a shine.

D. Clean up spills immediately and spot-treat stains with degreaser or oil emulsifier.

END OF SECTION

SECTION 07 19 21 – GRAFFITI REPELLENTS

PART 1 - GENERAL

1.1 SUMMARY

A. Section Includes:

1. Penetrating graffiti resistant repellents for stone masonry.

1.2 ACTION SUBMITTALS

A. Product Data: For each type of product.

1. Include manufacturer's recommended number of coats for each type of substrate and spreading rate for each separate coat.

B. Samples: For each type of graffiti repellent and substrate indicated, 12 by 12 inches in size, with specified graffiti-repellent treatment applied to half of each Sample.

1.3 INFORMATIONAL SUBMITTALS

A. Qualification Data: For Applicator.

B. Product Certificates: For each type of graffiti repellent.

C. Field quality-control reports.

D. Sample Warranty: For special warranty.

1.4 QUALITY ASSURANCE

A. Applicator Qualifications: An employer of workers trained or approved by manufacturer.

B. Mockups: Prepare mockups of each required graffiti repellent on each type of substrate required to demonstrate aesthetic effects, and to set quality standards for materials and execution.

1. Locate mockups on masonry sample panels in locations that enable viewing under same conditions as the completed Work.

a. Size: 4 sq. ft. each.

2. Approval of mockups does not constitute approval of deviations from the Contract Documents contained in mockups unless the Engineer specifically approves such deviations in writing.
3. Subject to compliance with requirements, approved mockups may become part of the completed Work if undisturbed at time of Substantial Completion.

C. Preinstallation Conference: Conduct conference at Project site.

1.5 FIELD CONDITIONS

A. Limitations: Proceed with application only when the following existing and forecasted weather and substrate conditions permit graffiti repellents to be applied according to manufacturers' written instructions and warranty requirements:

1. Stone mortar has cured for not less than 28 days.
2. Ambient temperature is above 40 degrees F and below 100 degrees F and will remain so for 24 hours.
3. Substrate is not frozen and substrate-surface temperature is above 40 degrees F and below 100 degrees F.
4. Rain or snow is not predicted within 24 hours.
5. Not less than 24 hours have passed since surfaces were last wet.
6. Windy conditions do not exist that might cause graffiti repellent to be blown onto vegetation or surfaces not intended to be treated.

1.6 WARRANTY

A. Special Warranty: Manufacturer's standard form in which manufacturer and Applicator agree(s) to repair or replace materials that fail to maintain graffiti repellency specified in "Performance Requirements" Article within specified warranty period.

1. Warranty Period: Two years from date of Substantial Completion.

PART 2 - PRODUCTS

2.1 PERFORMANCE REQUIREMENTS

A. Graffiti repellents shall meet the following performance requirements as determined by testing on manufacturer's standard substrates representing those indicated for this Project.

1. Form: Clear liquid.
2. Specific Gravity: 1.28
3. Weight per gallon: 10.62 lbs.
4. Active Content 15 percent
5. Total Solids: 15 percent, ASTM D2369
6. VOC Content: Less than 100 g/ l.
7. Flash Point: 100 degrees F, ASTM D3278.

8. Freeze Point: Less than –22 degrees F.
9. Shelf Life: One (1) year in tightly sealed, unopened container.

2.2 PENETRATING GRAFFITI REPELLENTS

A. Description: Clear, high performance, solvent-based silicone elastomer containing 15 percent or more solids of graffiti or other proprietary solvent carrier; and with 400 g/L or less of VOCs.

B. Basis-of-Design Product: Subject to compliance with requirements, provide Sure Klean® Weather Seal Blok-Guard® & Graffiti Control Ultra 15 as supplied by PROSOCO, Inc. or one of the following equal products:

1. Sei Chemical.
2. RainGuard Pro.
3. Approved equal.

PART 3 - EXECUTION

3.1 EXAMINATION

A. Examine substrates, areas, and conditions, with Applicator present, for compliance with requirements and conditions affecting performance of the Work.

1. Verify that surfaces are clean and dry according to graffiti-repellent manufacturer's requirements. Check moisture content in three representative locations by method recommended by manufacturer.
2. Verify that there is no efflorescence or other removable residues that would be trapped beneath the application of graffiti- repellent.
3. Verify that required repairs are complete, cured, and dry before applying graffiti-repellent.

B. Proceed with installation only after unsatisfactory conditions have been corrected.

3.2 PREPARATION

A. New Construction and Repairs: Allow cementitious materials to age before application of graffiti repellent, according to repellent manufacturer's written instructions.

B. Cleaning: Before application of graffiti- repellent, clean substrate of substances that could impair penetration or performance of product according to graffiti- repellent manufacturer's written instructions.

C. Protect adjoining work, including mortar and sealant bond surfaces, from spillage or blow-over of graffiti- repellent. Cover adjoining and nearby surfaces of aluminum and glass if there is the possibility of graffiti- repellent being deposited on surfaces. Cover live vegetation.

D. Coordination with Mortar Joints: Do not apply graffiti- repellent until pointing mortar for joints adjacent to surfaces receiving graffiti- repellent treatment has been installed and cured.

E. Coordination with Sealant Joints: Do not apply graffiti- repellent until sealants for joints adjacent to surfaces receiving graffiti- repellent treatment have been installed and cured.

1. Graffiti-repellent work may precede sealant application only if sealant adhesion and compatibility have been tested and verified using substrate, graffiti repellent, and sealant materials identical to those required.

3.3 APPLICATION

A. Manufacturer's Field Service: Engage a factory-authorized service representative to inspect the substrate before application of graffiti- repellent and to instruct Applicator on the product and application method to be used.

B. Apply coating of graffiti- repellent on surfaces to be treated using 15 psi-pressure spray with a fan-type spray nozzle to the point of saturation; roller or brush may be used if finish is shown to be acceptable to the Engineer.

1. Apply coating in dual passes of uniform, overlapping strokes. Remove excess material; do not allow material to puddle beyond saturation.
2. Comply with manufacturer's written instructions for application procedure unless otherwise indicated.

C. Apply a second saturation coating, repeating first application. Comply with manufacturer's written instructions for limitations on drying time between coats and after rainstorm wetting of surfaces between coats.

1. Consult manufacturer's technical representative if written instructions are not applicable to Project conditions.

3.4 FIELD QUALITY CONTROL

A. Testing of Graffiti- Repellent Material: The Engineer reserves the right to invoke the following procedure at any time and as often as the Engineer deems necessary during the period when graffiti repellent is being applied:

1. The Engineer will engage the services of a qualified testing agency to sample graffiti- repellent material being used. Samples of material delivered to Project site will be taken, identified, sealed, and certified in presence of Contractor.
2. Testing agency will perform tests for compliance of graffiti- repellent material with product requirements.

3. The Engineer may direct Contractor to stop applying graffiti- repellents if test results show material being used does not comply with product requirements. Contractor shall remove noncomplying material from Project site, pay for testing, and correct deficiency of surfaces treated with rejected materials, as approved by the Engineer.

3.5 CLEANING

A. Immediately clean graffiti- repellent from adjoining surfaces and surfaces soiled or damaged by graffiti- repellent application as work progresses.

B. Correct damage to work of other trades caused by graffiti- repellent application, as approved by the Engineer.

C. Comply with manufacturer's written cleaning instructions.

END OF SECTION

No Text On This Page

SECTION 07 21 00 – THERMAL INSULATION

PART 1 - GENERAL

1.1 SUMMARY

A. Section Includes:

1. Foam-plastic board insulation.
2. Mineral wool blanket insulation.

1.2 SUBMITTALS

A. Product Data: Submit manufacturer's product literature and installation instructions for each type of insulation material required.

B. Certified Test Reports: With product data, submit copies of certified test reports showing compliance with specified performance values, including fire performance and similar properties.

1.3 QUALITY ASSURANCE

A. Source Limitations: Obtain each type of building insulation through one source from a single manufacturer.

B. Fire-Test-Response Characteristics: Provide insulation and related materials with the fire-test-response characteristics indicated, as determined by testing identical products per test method indicated below by UL or another testing and inspecting agency acceptable to authorities having jurisdiction. Identify materials with appropriate markings of applicable testing and inspecting agency.

1. Surface-Burning Characteristics: ASTM E 84.
2. Fire-Resistance Ratings: ASTM E 119.
3. Combustion Characteristics: ASTM E 136.

1.4 DELIVERY, STORAGE, AND HANDLING

A. Protect insulation from physical damage and from becoming wet, soiled, or covered with ice or snow.

B. Comply with manufacturer's recommendations for handling, storage and protection.

PART 2 - PRODUCTS

2.1 MANUFACTURERS

A. Products: Subject to compliance with requirements, manufacturers offering products which may be incorporated in the Work include but are not limited to one of the following:

1. Extruded-Polystyrene Board Insulation:

   a. DiversiFoam Products.
   b. Dow Chemical Company.
   c. Owens Corning.
   d. Approved equal.

2. Mineral Wool Blanket Insulation:

   a. Industrial Insulation Group, LLC (IIG-LLC).
   b. Roxul Inc.
   c. Thermafiber, Inc.; an Owens Corning company; SAFB.
   d. Approved equal.

2.2 INSULATING MATERIALS

A. General: Provide insulating materials of thickness as shown, which comply with requirements indicated and with referenced standards.

2.3 EXTRUDED-POLYSTYRENE BOARD INSULATION

A. Extruded Polystyrene Board Insulation: Extruded polystyrene, rigid, ASTM C578 Type X with R-value (aged) of 5.6/inch at 75 degrees F mean temperature when tested in accordance with ASTM C518.

1. Basis- of- Design, Subject to compliance with requirements, provide the following or equal as approved by the Engineer:

   a. Styrofoam Brand Cavity-Mate Ultra by Dow Chemical.
   b. Panel size: 16 inches wide by 96 inches high.
   c. Thickness: As indicated on the Drawings.

2. Thermal Resistance (R Value): As indicated on the Drawings, for wall type indicated.

3. Insulation manufacturer shall verify compatibility for substrate and vapor barrier.

4. Product shall not be produced with or contain any of the U.S. EPA regulated CFC compounds which are listed in the Montreal Protocol.

5. Minimum compressive strength: 25 psi in vertical direction when tested in accordance with ASTM D1621.

6. Maximum water absorption: 0.1% by volume when tested in accordance with ASTM C272.
7. Surface Burning Characteristics in accordance with UL tests: Flame Spread - 5, Smoke Developed - 165.

2.4 MINERAL WOOL BLANKET INSULATION

A. Mineral-Wool Blanket, Unfaced: ASTM C 665, Type I (blankets without membrane facing); consisting of fibers; with maximum flame-spread and smoke-developed indexes of 25 and 50, respectively, per ASTM E 84; passing ASTM E 136 for combustion characteristics.

1. Basis- of- Design, Subject to compliance with requirements, provide the following or equal as approved by the Engineer:

   a. Roxul Inc; COMFORTBATT.
   b. Thickness: As indicated on the Drawings.

2. Thermal Resistance (R Value): As indicated on the Drawings, for wall type indicated.
3. Mold Resistance: All insulation shall be mold resistant.

2.5 AUXILIARY INSULATING MATERIALS

A. Adhesive for Bonding Insulation: Type recommended by insulation manufacturer and complying with requirements for fire performance.

B. Mechanical Anchors: Type and size as recommended by insulation manufacturer for type of application and condition of substrate.

PART 3 - EXECUTION

3.1 EXAMINATION

A. Examine substrates and conditions under which insulation work is to be performed. Do not proceed with installation of insulation until unsatisfactory conditions have been corrected.

3.2 PREPARATION

A. Clean substrates of substances harmful to insulation.

B. Commencement of the building insulation work implies the Contractors acceptance of the underlying conditions and substrate construction to which the building materials are installed.

3.3 INSTALLATION

A. Comply with manufacturer's instructions. If printed instructions are not available or not applicable, consult manufacturer's technical representative for specific recommendations before proceeding with Work.

B. Install insulation that is undamaged, dry, and unsoiled and that has not been left exposed at any time to ice and snow.

C. Extend insulation full thickness as shown over entire area to be insulated. Cut and fit tightly around obstructions, and fill voids with insulation. Remove projections which interfere with placement.

D. Apply a single layer of insulation of required thickness, unless otherwise shown or required to make up total thickness.

E. If no specific method is indicated, bond units with adhesive or use mechanical anchorage to provide permanent placement and support.

F. Install Board type insulation on concrete or masonry substrates by adhesively attached, spindle-type insulation anchors as follows:

1. Fasten insulation anchors to concrete substrates with insulation anchor adhesive per anchor manufacturer's written instructions. Space anchors per insulation manufacturer's written instructions for insulation type, thickness, and application indicated.
2. After adhesive, has dried, install board insulation by pressing insulation into position over spindles and securing it tightly in place with insulation-retaining washers, taking care not to compress insulation below indicated thickness. Take the necessary precautions required to prevent damage to the facings of the board insulations.

G. Mineral Wool Blanket Insulation: Install in cavities formed by framing members according to the following requirements:

1. Use insulation widths and lengths that fill the cavities formed by framing members. If more than one length is required to fill the cavities, provide lengths that will produce a snug fit between ends.
2. Place insulation in cavities formed by framing members to produce a friction fit between edges of insulation and adjoining framing members.
3. Maintain 3-inch clearance of insulation around recessed lighting fixtures not rated for or protected from contact with insulation.
4. For metal-framed wall cavities where cavity heights exceed 96 inches, support unfaced blankets mechanically and support faced blankets by taping flanges of insulation to flanges of metal studs.

3.4 PROTECTION

A. General: Protect installed insulation from harmful weather exposures and from possible physical abuses.

B. Provide temporary coverings or enclosures where insulation is subject to abuse and cannot be concealed and protected by permanent construction immediately after installation.

END OF SECTION

No Text On This Page

SECTION 07 26 00 – VAPOR RETARDERS

PART 1 - GENERAL

1.1 SUMMARY

A. Section Includes:

1. Polyethylene vapor retarders.
2. Reinforced-polyethylene vapor retarders.
3. Fire-retardant, reinforced-polyethylene vapor retarders.

1.2 ACTION SUBMITTALS

A. Product Data: For each type of product.

1.3 INFORMATIONAL SUBMITTALS

A. Product Test Reports: For each product, for tests performed by a qualified testing agency.

1.4 DELIVERY, STORAGE AND HANDLING

A. Store vapor retarder at a temperature above 60 degrees F prior to installation for length of time recommended in writing by vapor retarder manufacturer.

B. Store rolls in original packed condition, upright in a cool, dry environment, covered with manufacturer's UV resistant film.

PART 2 - PRODUCTS

2.1 FIRE-RETARDANT, REINFORCED VAPOR RETARDERS

A. Fire-Retardant, Reinforced Vapor Retarders: Sheet consisting of a reinforced composite aluminum foil with a self-adhesive SBS backing and removable poly-release film 0.06 lbs. per sf., with maximum permeance rating of 0.03 perms.

1. Basis of Design Product: Subject to compliance with requirements, provide "Vapair MD" as manufactured by Carlisle Syntec Systems, or an Engineer approved equal by one of the following:

   a. WR Meadows.
   b. GAF.
   c. Approved equal.

2.2 ACCESSORIES

A. Vapor-Retarder Tape: Pressure-sensitive tape of type recommended by vapor-retarder manufacturer for sealing joints and penetrations in vapor retarder.

B. Adhesive for Vapor Retarders: Product recommended by vapor-retarder manufacturer and has demonstrated capability to bond vapor retarders securely to substrates indicated.

C. Vapor-Retarder Fasteners: Pancake-head, self-tapping steel drill screws; with fender washers.

PART 3 - EXECUTION

3.1 PREPARATION

A. Clean substrates of substances that are harmful to vapor retarders, including removing projections capable of puncturing vapor retarders.

3.2 INSTALLATION OF VAPOR RETARDERS ON FRAMING

A. Place vapor retarders on metal decking, as indicated on Drawings.

1. When installing during weather conditions with strong sunlight, ensure that rolls that are taken from the pallet remain under UV protective cover until ready to be installed.

B. Extend vapor retarders to extremities of areas to protect from vapor transmission. Secure vapor retarders in place with adhesives, vapor retarder fasteners, or other anchorage system as recommended by manufacturer. Extend vapor retarders to cover miscellaneous voids in insulated substrates, including those filled with loose-fiber insulation.

C. Seal vertical joints in vapor retarders over framing by lapping no fewer than two studs and sealing with vapor-retarder tape according to vapor-retarder manufacturer's written instructions. Locate all joints over framing members or other solid substrates.

D. Seal joints caused by pipes, conduits, electrical boxes, and similar items penetrating vapor retarders with vapor-retarder tape to create an airtight seal between penetrating objects and vapor retarders.

E. Repair tears or punctures in vapor retarders immediately before concealment by other work. Cover with vapor-retarder tape or another layer of vapor retarders.

3.3 PROTECTION

A. Protect vapor retarders from damage until concealed by permanent construction.

END OF SECTION

SECTION 07 27 26 – FLUID-APPLIED MEMBRANE AIR/VAPOR BARRIERS

PART 1 - GENERAL

1.1 SUMMARY

A. Section Includes:

1. Vapor-retarding, fluid-applied air barriers.
2. Vapor-permeable, fluid-applied air barriers.

1.2 DEFINITIONS

A. Air-Barrier Material: A primary element that provides a continuous barrier to the movement of air.

B. Air-Barrier Accessory: A transitional component of the air barrier that provides continuity.

C. Air-Barrier Assembly: The collection of air-barrier materials and accessories applied to an opaque wall, including joints and junctions to abutting construction, to control air movement through the wall.

1.3 PREINSTALLATION MEETINGS

A. Preinstallation Conference: Conduct conference at Project site.

1. Review air-barrier requirements and installation, special details, mockups, air-leakage and bond testing, air-barrier protection, and work scheduling that covers air barriers.

1.4 ACTION SUBMITTALS

A. Product Data: For each type of product.

1. Include manufacturer's written instructions for evaluating, preparing, and treating each substrate; technical data; dry film thickness; and tested physical and performance properties of products.

B. Shop Drawings: For air-barrier assemblies.

1. Show locations and extent of air-barrier materials, accessories, and assemblies specific to Project conditions.
2. Include details for substrate joints and cracks, counterflashing strips, penetrations, inside and outside corners, terminations, and tie-ins with adjoining construction.
3. Include details of interfaces with other materials that form part of air barrier.

1.5 INFORMATIONAL SUBMITTALS

A. Qualification Data: For Installer.

B. Product Certificates: From air-barrier manufacturer, certifying compatibility of air barriers and accessory materials with Project materials that connect to or that come in contact with the barrier.

C. Product Test Reports: For each air-barrier assembly, for tests performed by a qualified testing agency.

D. Field quality-control reports.

1.6 QUALITY ASSURANCE

A. Installer Qualifications: An entity that employs installers and supervisors who are trained and approved by manufacturer.

1. Installer shall be licensed by ABAA according to ABAA's Quality Assurance Program and shall employ ABAA-certified installers and supervisors on Project.

B. Mockups: Build mockups to set quality standards for materials and execution.

1. Build integrated mockups of exterior wall assembly as directed by the Engineer incorporating backup wall construction, external cladding, door frame and sill, insulation, ties and other penetrations, and flashing to demonstrate surface preparation, crack and joint treatment, application of air barriers, and sealing of gaps, terminations, and penetrations of air-barrier assembly.

   a. Coordinate construction of mockups to permit inspection and testing of air barrier before external insulation and cladding are installed.
   b. Include junction with roofing membrane, building corner condition, and foundation wall intersection.
   c. If Engineer determines mockups do not comply with requirements, reconstruct mockups and apply air barrier until mockups are approved.

2. Approval of mockups does not constitute approval of deviations from the Contract Documents contained in mockups unless Engineer specifically approves such deviations in writing.

3. Subject to compliance with requirements, approved mockups may become part of the completed Work if undisturbed at time of Substantial Completion.

1.7 DELIVERY, STORAGE, AND HANDLING

A. Remove and replace liquid materials that cannot be applied within their stated shelf life.

B. Protect stored materials from direct sunlight.

1.8 FIELD CONDITIONS

A. Environmental Limitations: Apply air barrier within the range of ambient and substrate temperatures recommended in writing by air-barrier manufacturer.

1. Protect substrates from environmental conditions that affect air-barrier performance.
2. Do not apply air barrier to a damp or wet substrate or during snow, rain, fog, or mist.

PART 2 - PRODUCTS

2.1 PERFORMANCE REQUIREMENTS

A. Air-Barrier Performance: Air-barrier assembly and seals with adjacent construction shall be capable of performing as a continuous air barrier and as a liquid-water drainage plane flashed to discharge to the exterior incidental condensation or water penetration. Air-barrier assemblies shall be capable of accommodating substrate movement and of sealing substrate expansion and control joints, construction material changes, penetrations, tie-ins to installed waterproofing, and transitions at perimeter conditions without deterioration and air leakage exceeding specified limits.

B. Air-Barrier Assembly Air Leakage: Maximum 0.04 cfm/sq. ft. of surface area at 1.57 lbf/sq. ft., when tested according to ASTM E 2357.

C. Air Barrier Fire Propagation Characteristics: Each type shall pass NFPA 285 testing as part of an approved assembly.

D. Liquid Emulsion Vapor Permeable Air Barrier Membrane: One component liquid applied, rubberized (elastomeric) membrane, having the following characteristics:

1. Modified Bituminous Type: Basis of Design: Air-Bloc 31 MR as manufactured by Henry Company, or an approved equal by one of the following:

a. Carlisle Coatings & Waterproofing Inc.
b. W.R. Meadows, Inc.
c. Or approved equal

E. High-Build, Vapor-Retarding Air Barrier: Modified bituminous or synthetic polymer membrane with an installed dry film thickness, according to manufacturer's written instructions, of 35 mils or thicker over smooth, void-free substrates.

1. Modified Bituminous Type: Basis of Design: Air-Bloc 16 MR as manufactured by Henry Company, or an approved equal by one of the following:

a. Carlisle Coatings & Waterproofing Inc.
b. W.R. Meadows, Inc.

c. Or approved equal

2.2 ACCESSORY MATERIALS

A. Requirement: Provide primers, transition strips, termination strips, joint reinforcing fabric and strips, joint sealants, counterflashing strips, flashing sheets and metal termination bars, termination mastic, substrate patching materials, adhesives, tapes, foam sealants, lap sealants, and other accessory materials that are recommended in writing by air-barrier manufacturer to produce a complete air-barrier assembly and that are compatible with primary air-barrier material and adjacent construction to which they may seal.

B. Primer: Liquid primer recommended for substrate by air-barrier material manufacturer.

C. Transition Membrane: Manufacturers standard self-adhering, transition membrane that is compatible with air barrier membrane

D. Transition Membrane Primer: Manufacturers standard primer that is compatible with air barrier membrane.

PART 3 - EXECUTION

3.1 EXAMINATION

A. Examine substrates, areas, and conditions, with Installer present, for compliance with requirements and other conditions affecting performance of the Work.

1. Verify that substrates are sound and free of oil, grease, dirt, excess mortar, or other contaminants.
2. Verify that substrates have cured and aged for minimum time recommended in writing by air-barrier manufacturer.
3. Verify that substrates are visibly dry and free of moisture. Test concrete substrates for capillary moisture by plastic sheet method according to ASTM D 4263.
4. Verify that masonry joints are flush and completely filled with mortar.

B. Proceed with installation only after unsatisfactory conditions have been corrected.

3.2 SURFACE PREPARATION

A. Clean, prepare, treat, fill, and seal substrate and joints and cracks in substrate according to manufacturer's written instructions and details. Provide clean, dust-free, and dry substrate for air-barrier application.

B. Mask off adjoining surfaces not covered by air barrier to prevent spillage and overspray affecting other construction.

C. Remove grease, oil, bitumen, form-release agents, paints, curing compounds, and other penetrating contaminants or film-forming coatings from concrete.

D. Remove fins, ridges, mortar, and other projections and fill honeycomb, aggregate pockets, holes, and other voids in concrete with substrate-patching material.

E. Remove excess mortar from masonry ties, shelf angles, and other obstructions.

F. At changes in substrate plane, apply sealant or termination mastic beads at sharp corners and edges to form a smooth transition from one plane to another.

G. Cover gaps in substrate plane and form a smooth transition from one substrate plane to another with stainless-steel sheet mechanically fastened to structural framing to provide continuous support for air barrier.

H. Bridge isolation joints, expansion joints and discontinuous wall-to-wall, deck-to-wall, and deck-to-deck joints with air-barrier accessory material that accommodates joint movement according to manufacturer's written instructions and details.

3.3 ACCESSORIES INSTALLATION

A. Install accessory materials according to air-barrier manufacturer's written instructions and details to form a seal with adjacent construction and ensure continuity of air and water barrier.

1. Coordinate the installation of air barrier with installation of roofing membrane and base flashing to ensure continuity of air barrier with roofing membrane.
2. Install transition strip on roofing membrane or base flashing so that a minimum of 3 inches of coverage is achieved over each substrate.
3. Unless manufacturer recommends in writing against priming, apply primer to substrates at required rate and allow it to dry.
4. Apply primer to substrates at required rate and allow it to dry. Limit priming to areas that will be covered by air-barrier material on same day. Reprime areas exposed for more than 24 hours.

B. Connect and seal exterior wall air-barrier material continuously to roofing-membrane air barrier, concrete below-grade structures, floor-to-floor construction, exterior louvers, exterior door framing, and other construction used in exterior wall openings, using accessory materials.

C. At end of each working day, seal top edge of strips and transition strips to substrate with termination mastic.

D. Apply joint sealants forming part of air-barrier assembly within manufacturer's recommended application temperature ranges. Consult Engineer when sealant cannot be applied within these temperature ranges.

E. Wall Openings: Prime concealed, perimeter frame surfaces of doors. Apply transition strip so that a minimum of 3 inches of coverage is achieved over each substrate. Maintain 3 inches of full contact over firm bearing to perimeter frames, with not less than 1 inch of full contact.

1. Transition Strip: Roll firmly to enhance adhesion.

2. Preformed Silicone Extrusion: Set in full bed of silicone sealant applied to walls, frame,

F. Fill gaps in perimeter frame surfaces of doors and miscellaneous penetrations of air-barrier material with foam sealant.

G. Seal strips and transition strips around masonry reinforcing or ties and penetrations with termination mastic.

H. Seal top of through-wall flashings to air barrier with an additional 6-inch-wide, transition strip.

I. Seal exposed edges of strips at seams, cuts, penetrations, and terminations not concealed by metal counterflashings or ending in reglets with termination mastic.

J. Repair punctures, voids, and deficient lapped seams in strips and transition strips. Slit and flatten fishmouths and blisters. Patch with transition strips extending 6 inches beyond repaired areas in strip direction.

3.4 FLUID-APPLIED AIR/VAPOR BARRIER INSTALLATION

A. Apply air-barrier material to form a seal with strips and transition strips and to achieve a continuous air barrier according to air-barrier manufacturer's written instructions and details. Apply air-barrier material within manufacturer's recommended application temperature ranges.

1. Unless manufacturer recommends in writing against priming, apply primer to substrates at required rate and allow it to dry.
2. Limit priming to areas that will be covered by air-barrier material on same day. Reprime areas exposed for more than 24 hours.
3. Where multiple prime coats are needed to achieve required bond, allow adequate drying time between coats.

B. Application: Apply continuous unbroken air-barrier material to substrates according to the following thickness. Apply air-barrier material in full contact around protrusions such as masonry ties.

1. Dry Film Thickness: Total dry film thickness as recommended in writing by manufacturer to comply with performance requirements, but not less than 35 mils, applied in one or more equal coats.

C. Correct deficiencies in or remove air barrier that does not comply with requirements; repair substrates and reapply air-barrier components.

3.5 FIELD QUALITY CONTROL

A. ABAA Quality Assurance Program: Perform examinations, preparation, installation, testing, and inspections under ABAA's Quality Assurance Program.

B. Testing Agency: Engineer will engage a qualified testing agency to perform tests and inspections.

C. Inspections: Air-barrier materials, accessories, and installation are subject to inspection for compliance with requirements. Inspections may include the following:

1. Continuity of air-barrier system has been achieved throughout the building envelope with no gaps or holes.
2. Air-barrier dry film thickness.
3. Continuous structural support of air-barrier system has been provided.
4. Masonry and concrete surfaces are smooth, clean, and free of cavities, protrusions, and mortar droppings.
5. Site conditions for application temperature and dryness of substrates have been maintained.
6. Maximum exposure time of materials to UV deterioration has not been exceeded.
7. Surfaces have been primed, if applicable.
8. Laps in strips and transition strips have complied with minimum requirements and have been shingled in the correct direction (or mastic has been applied on exposed edges), with no fishmouths.
9. Termination mastic has been applied on cut edges.
10. Strips and transition strips have been firmly adhered to substrate.
11. Compatible materials have been used.
12. Transitions at changes in direction and structural support at gaps have been provided.
13. Connections between assemblies (air-barrier and sealants) have complied with requirements for cleanliness, surface preparation and priming, structural support, integrity, and continuity of seal.
14. All penetrations have been sealed.

D. Tests: As determined by testing agency from among the following tests:

1. Air-Leakage-Location Testing: Air-barrier assemblies will be tested for evidence of air leakage according to ASTM E 1186, chamber pressurization or depressurization with smoke tracers or ASTM E 1186, chamber depressurization using detection liquids.
2. Air-Leakage-Volume Testing: Air-barrier assemblies will be tested for air-leakage rate according to ASTM E 783 or ASTM E 2357.
3. Adhesion Testing: Air-barrier assemblies will be tested for required adhesion to substrate according to ASTM D 4541 for each 600 sq. ft. of installed air barrier or part thereof.

E. Air barriers will be considered defective if they do not pass tests and inspections.

1. Apply additional air-barrier material, according to manufacturer's written instructions, where inspection results indicate insufficient thickness.
2. Remove and replace deficient air-barrier components for retesting as specified above.

F. Repair damage to air barriers caused by testing; follow manufacturer's written instructions.

G. Prepare test and inspection reports.

3.6 CLEANING AND PROTECTION

A. Protect air-barrier system from damage during application and remainder of construction period, according to manufacturer's written instructions.

1. Protect air barrier from exposure to UV light and harmful weather exposure as recommended in writing by manufacturer. If exposed to these conditions for longer than recommended, remove and replace air barrier or install additional, full-thickness, air-barrier application after repairing and preparing the overexposed materials according to air-barrier manufacturer's written instructions.
2. Protect air barrier from contact with incompatible materials and sealants not approved by air-barrier manufacturer.

B. Clean spills, stains, and soiling from construction that would be exposed in the completed work using cleaning agents and procedures recommended in writing by manufacturer of affected construction.

C. Remove masking materials after installation.

END OF SECTION

SECTION 07 42 13 – METAL ROOF PANELS

PART 1 - GENERAL

1.1 SUMMARY

A. Section Includes:

1. Four-sided interlocking steel roof panels.

1.2 PREINSTALLATION MEETINGS

A. Preinstallation Conference: Conduct conference at Project site.

1. Meet with the Engineer, metal panel Installer, metal panel manufacturer's representative, structural-support Installer, and installers whose work interfaces with or affects metal panels, including installers of roof accessories and roof-mounted equipment.
2. Review and finalize construction schedule and verify availability of materials, Installer's personnel, equipment, and facilities needed to make progress and avoid delays.
3. Review methods and procedures related to metal panel installation, including manufacturer's written instructions.
4. Examine support conditions for compliance with requirements, including alignment between and attachment to structural members.
5. Review structural loading limitations of deck during and after roofing.
6. Review flashings, special details, drainage, penetrations, and condition of other construction that affect metal panels.
7. Review governing regulations and requirements for insurance, certificates, and tests and inspections if applicable.
8. Review temporary protection requirements for metal panel systems during and after installation.
9. Review procedures for repair of metal panels damaged after installation.
10. Document proceedings, including corrective measures and actions required, and furnish copy of record to each participant.

1.3 SUBMITTALS

A. Product Data: Submit manufacturer’s product data. Include construction details, material descriptions, dimensions of individual components and profiles, and finishes for each type of panel and accessory.

B. Samples for Verification: For each type of exposed finish required, prepared on Samples of size indicated below:

1. Metal Panels: 12 inches long by actual panel width. Include fasteners, closures, underlayment and other metal panel accessories.

C. Shop Drawings: Show fabrication and installation details for roof panels.

1. Include fabrication and installation layouts of metal panels; details of edge conditions, joints, panel profiles, corners, anchorages, attachment system, trim, flashings, closures, and accessories; and special details.
2. Accessories: Include details of the flashing, trim, underlayment and anchorage systems, at a scale of not less than 1-1/2 inches per 12 inches (1:10).

D. Qualification Data: For Installer.

E. Product Test Reports: For each product, for tests performed by a qualified testing agency.

F. Field quality-control reports.

G. Sample Warranties: For special warranties.

H. Maintenance Data: For metal panels to include in maintenance manuals.

1.4 QUALITY ASSURANCE

A. Installer Qualifications: An entity that employs installers and supervisors who are trained and approved by manufacturer.

B. Mockups: Build mockups to verify selections made under Sample submittals and to demonstrate aesthetic effects and set quality standards for fabrication and installation.

1. Build mockup of typical roof area, including underlayment and fascia, as shown on Drawings; approximately 48 inches 12 feet square by full thickness, including attachments, and accessories.
2. Approval of mockups does not constitute approval of deviations from the Contract Documents contained in mockups unless Engineer specifically approves such deviations in writing.
3. Approved mockups may become part of the completed Work if undisturbed at time of Substantial Completion.

1.5 DELIVERY, STORAGE, AND HANDLING

A. Deliver components, metal panels, and other manufactured items so as not to be damaged or deformed. Package metal panels for protection during transportation and handling.

B. Unload, store, and erect metal panels in a manner to prevent bending, warping, twisting, and surface damage.

C. Stack metal panels horizontally on platforms or pallets, covered with suitable weathertight and ventilated covering. Store metal panels to ensure dryness, with positive slope for drainage of water. Do not store metal panels in contact with other materials that might cause staining, denting, or other surface damage.

D. Retain strippable protective covering on metal panels during installation.

1.6 FIELD CONDITIONS

A. Weather Limitations: Proceed with installation only when existing and forecasted weather conditions permit assembly of metal panels to be performed according to manufacturers' written instructions and warranty requirements.

1.7 COORDINATION

A. Coordinate sizes and locations of roof curbs, equipment supports, and roof penetrations with actual equipment provided.

B. Coordinate metal panel installation with flashing, trim, and other adjoining work to provide a leakproof, secure, and noncorrosive installation.

1.8 WARRANTY

A. Special Warranty: Manufacturer's standard form in which manufacturer agrees to repair or replace components of metal panel systems that fail in materials or workmanship within specified warranty period.

1. Failures include, but are not limited to, the following:

   a. Structural failures including rupturing, cracking, or puncturing.
   b. Deterioration of metals and other materials beyond normal weathering.

2. Warranty Period: Two years from date of Substantial Completion.

B. Special Warranty on Panel Finishes: Manufacturer's standard form in which manufacturer agrees to repair finish or replace metal panels that show evidence of deterioration of factory-applied finishes within specified warranty period.

1. Exposed Panel Finish: Deterioration includes, but is not limited to, the following:

   a. Color fading more than 5 Hunter units when tested according to ASTM D 2244.
   b. Chalking in excess of a No. 8 rating when tested according to ASTM D 4214.
   c. Cracking, checking, peeling, or failure of paint to adhere to bare metal.

2. Finish Warranty Period: 20 years from date of Substantial Completion.

PART 2 - PRODUCTS

2.1 PERFORMANCE REQUIREMENTS

A. Structural Performance: Provide metal panel systems capable of withstanding the effects of the following loads, based on testing according to ASTM E 1592:

1. Wind Loads: As indicated on the Structural Drawings.
2. Other Design Loads: As indicated on the Structural Drawings.
3. Deflection Limits: For wind loads, no greater than 1/240 > of the span.

B. Air Infiltration: Air leakage of not more than 0.06 cfm/sq. ft. when tested according to ASTM E 1680 or ASTM E 283 at the following test-pressure difference:

1. Test-Pressure Difference: 6.24 lbf/sq. ft.

C. Water Penetration under Static Pressure: No water penetration when tested according to ASTM E 1646 or ASTM E 331 at the following test-pressure difference:

1. Test-Pressure Difference: 6.24 lbf/sq. ft.

D. Hydrostatic-Head Resistance: No water penetration when tested according to ASTM E 2140.

E. Wind-Uplift Resistance: Provide metal roof panel assemblies that comply with UL 580 for wind-uplift-resistance class indicated.

1. Uplift Rating: UL-90.

F. Thermal Movements: Provide exterior metal fabrications that allow for thermal movements resulting from the following maximum change (range) in ambient and surface temperatures by preventing buckling, opening of joints, overstressing of components, failure of connections, and other detrimental effects. Base engineering calculation on surface temperatures of materials due to both solar heat gain and nighttime-sky heat loss.

1. Temperature Change (Range): 120 deg F, ambient; 180 deg F, material surfaces

2.2 MANUFACTURERS

A. Manufacturers: Subject to compliance with requirements, manufacturers offering products which may be incorporated in the Work include but are not limited to one of the following:

1. Millennium Forms.
2. MetalTech USA.
3. Reliable Sheet Metal.
4. Approved equal.

B. Basis of Design Product: Subject to compliance with requirements, provide flat lock steel roof tiles as manufacture by Millennium Forms, or an Engineer approved equal.

1. Flat-Lock Panel Exposure Size: As indicated on the Drawings.
2. Reveal Panel Sizes: As indicate on the Drawings.
3. Thickness: 24-gage, mill tolerances apply.
4. Temper: Hot Rolled.
5. Tensile Strength: ASTM E8/E8M, 50,000 psi.
6. Yield Strength: ASTM E8/E8M, 27,600 psi.
7. Elongation: ASTM E8/E8/M 22 percent
8. Rockwell Hardness: ASTM E18, 58
9. Thermal Conductivity: 360 BTU-in/hr-ft^2-ºF ^{2}-°F
10. Performance Rating:

    a. Wind Resistance: 110 mph.

11. Finish: Zalmag, Pre-Patina II.

2.3 FERROUS METALS

A. Commercial Steel (CS): ASTM A1046, Grade B, 50 ksi yield, with manufacturer's non-corrosive coating, consisting of zinc, aluminum, magnesium and silicon, Coating designation ZM40.

2.4 ACCESSORIES

A. Trim, Coping and Flashing: Same material, finish, and gage as roof panels except where otherwise noted; refer to Section 076200 – "Sheet Metal Flashing and Trim" for additional fabrication and installation requirements.

1. Verify that materials not provided by panel manufacturer are compatible to panels and trim.
2. Trim Length: 8 or 10-foot.

B. Trim:

1. 1-piece Outside Corner: 1/4 -inch exposed faces.
2. 3-piece Outside Corner: 2-inch exposed faces.
3. J-Channels: 1-inch exposed face.
4. Mounting Clips: 3.4 by 3.4 inches.
5. Custom Formed Coping: As indicated on the Drawings.

C. Vapor Retarder: Fire resistant, composite aluminum foil with a self-adhering SBS backing. Refer to Section 072600 – "Vapor Retarders" for additional requirements.

D. Synthetic Underlayment: Laminated or reinforced, woven polyethylene or polypropylene, synthetic roofing underlayment; bitumen free; slip resistant; suitable for high temperatures over 220 deg F; and complying with physical requirements of ASTM D 226/D 226M for Type I and Type II felts.

1. Manufacturers: Subject to compliance with requirements, available manufacturers offering products that may be incorporated into the Work include, but are not limited to the following:

    a. Atlas Roofing Corporation.
    b. Intertape Polymer Group.
    c. Kirsch Building Products, LLC.
    d. Approved equal.

E. Joint Sealants: Exterior-grade, high-temperature, silicone joint sealant, as specified in Section 079200 – “Joint Sealants”.

F. Snow Guards: Basis of Design: Subject to compliance with requirements, provide “PD50 Pad Style Snow Guard” as manufactured by Alpine Snow Guards.

1. Galvanized Steel Shingle: Provide roof/metal tile installation type w/ extended leg.
2. Finish: Mill finish.
3. Other Manufacturers:

    a. Sno Gem.
    b. Rocky Mountain Snow Guard.
    c. Approved equal.

G. Roof Plane Ventilating Mat: Basis of Design: Subject to compliance with requirements, provide “EnkaMat ASV 7020” as manufactured by Low & Bonar.

1. Continuous woven nylon matrix with a min. 85% open construction for free air and water movement.
2. Thickness: ½” min or as recommended by manufacturer for Climate Zone 4a.
3. Other Manufacturers:

    a. R-Vent by Advanced Building Products.
    b. Cedar Breather by Benjamin Obdyke.
    c. Approved equal.

2.5 FASTENERS

A. Fasteners: Galvanized steel screws, minimum length: 1 inch.

B. Underlayment Fasteners: Galvanized steel, ring-shank roofing nails, or staples with washers.

2.6 MISCELLANEOUS MATERIALS

A. Galvanizing Repair Paint: High-zinc-dust-content paint for re-galvanizing welds in steel, complying with SSPC-Paint 20.

B. Bituminous Paint: Cold-applied asphalt mastic complying with SSPC-Paint 12, except containing no asbestos fibers, or cold-applied asphalt emulsion complying with ASTM D 1187.

C. Nonshrink, Nonmetallic Grout: Factory-packaged, nonstaining, noncorrosive, nongaseous grout complying with ASTM C 1107. Provide grout specifically recommended by manufacturer for interior and exterior applications.

2.7 FABRICATION, GENERAL

A. Form exposed work true to line and level with accurate angles and surfaces and straight edges.

2.8 FINISHES, GENERAL

A. Comply with NAAMM's "Metal Finishes Manual for Architectural and Metal Products" for recommendations for applying and designating finishes.

B. Protect mechanical finishes on exposed surfaces from damage by applying a strippable, temporary protective covering before shipment.

C. Appearance of Finished Work: Noticeable variations in same piece are not acceptable. Variations in appearance of abutting or adjacent pieces are acceptable if they are within one-half of the range of approved Samples. Variations in appearance of other components are acceptable if they are within the range of approved Samples and are assembled or installed to minimize contrast.

2.9 STEEL AND IRON FINISHES

A. Zalmag Finish:

1. Manufacturer’s coating consists of Zinc, Aluminum, and Magnesium.

PART 3 - EXECUTION

3.1 EXAMINATION

A. Examine substrate to receive steel roof panels.

B. Notify Engineer of conditions that would adversely affect installation.

C. Do not begin surface preparation or installation until unacceptable conditions are corrected.

D. Ensure cover board is solid with a minimum thickness of $^{1}/_{2}$ inch.

1. Cover Board: Refer to Section 092900 – “Gypsum Board” for additional requirements.

E. Ensure underlayment in properly installed and undamaged.

3.2 SURFACE PREPARATION

A. Prepare surfaces in accordance with manufacturer's instructions.

B. Ensure surfaces to receive metal roof panels are smooth and even, and that there are no protruding fasteners.

3.3 INSTALLATION

A. Install metal roof panels and snow guards, in accordance with manufacturer's instructions.

B. Pull panels from several boxes during installation process to ensure random finish variation.

C. Install metal roof panels and snow guards to achieve performance rating.

D. Use specified fasteners at spacing in accordance with manufacturer's instructions.

E. Prevent Electrolysis:

1. Prevent dissimilar metals and corrosive nonmetallic materials from coming into direct contact with steel materials.
2. Do not allow water to flow from dissimilar metals to steel materials.

F. Install trim and flashing in accordance with manufacturer's instructions.

G. Joint Sealants:

1. Install joint sealants as specified in Section 079200 – "Joint Sealants".
2. Install joint sealants at overlapping flashing and exposed fastener heads.

3.4 PROTECTION

A. Protect installed metal roof panels to ensure that, except for normal weathering, panels will be without damage or deterioration at time of substantial completion.

END OF SECTION

SECTION 07 62 00 – SHEET METAL FLASHING AND TRIM

PART 1 - GENERAL

1.1 SUMMARY

A. Section Includes:

1. Manufactured through-wall flashing with counterflashing.
2. Manufactured reglets with counterflashing.

1.2 COORDINATION

A. Coordinate sheet metal flashing and trim layout and seams with sizes and locations of penetrations to be flashed, and joints and seams in adjacent materials.

B. Coordinate sheet metal flashing and trim installation with adjoining roofing and wall materials, joints, and seams to provide leakproof, secure, and noncorrosive installation.

1.3 PREINSTALLATION MEETINGS

A. Preinstallation Conference: Conduct conference at Project site.

1. Review construction schedule. Verify availability of materials, Installer's personnel, equipment, and facilities needed to make progress and avoid delays.
2. Review special roof details, roof drainage, roof-penetration flashing, equipment curbs, and condition of other construction that affect sheet metal flashing and trim.
3. Review requirements for insurance and certificates if applicable.
4. Review sheet metal flashing observation and repair procedures after flashing installation.

1.4 ACTION SUBMITTALS

A. Product Data: For each type of product.

1. Include construction details, material descriptions, dimensions of individual components and profiles, and finishes for each manufactured product and accessory.

B. Shop Drawings: For sheet metal flashing and trim.

1. Include plans, elevations, sections, and attachment details.
2. Detail fabrication and installation layouts, expansion-joint locations, and keyed details. Distinguish between shop- and field-assembled work.

3. Include identification of material, thickness, weight, and finish for each item and location in Project.
4. Include details for forming, including profiles, shapes, seams, and dimensions.
5. Include details for joining, supporting, and securing, including layout and spacing of fasteners, clips, and other attachments. Include pattern of seams.
6. Include details of termination points and assemblies.
7. Include details of expansion joints and expansion-joint covers, including showing direction of expansion and contraction from fixed points.
8. Include details of roof-penetration flashing.
9. Include details of edge conditions and counterflashings as applicable.
10. Include details of special conditions.
11. Include details of connections to adjoining work.

C. Samples for Verification: For each type of exposed finish.

1. Sheet Metal Flashing: 12 inches long by actual width of unit, including finished seam and in required profile. Include fasteners, clips, closures, and other attachments.
2. Trim, Metal Closures, Expansion Joints, Joint Intersections, and Miscellaneous Fabrications: 12 inches long and in required profile. Include fasteners and other exposed accessories.
3. Unit-Type Accessories and Miscellaneous Materials: Full-size Sample.

1.5 INFORMATIONAL SUBMITTALS

A. Qualification Data: For fabricator.

B. Product Certificates: For each type of coping and roof edge flashing that is SPRI ES-1 tested.

C. Product Test Reports: For each product, for tests performed by a qualified testing agency.

D. Sample Warranty: For special warranty.

1.6 CLOSEOUT SUBMITTALS

A. Maintenance Data: For sheet metal flashing and trim, and its accessories, to include in maintenance manuals.

1.7 QUALITY ASSURANCE

A. Fabricator Qualifications: Employs skilled workers who custom fabricate sheet metal flashing and trim similar to that required for this Project and whose products have a record of successful in-service performance.

B. Mockups: Build mockups to verify selections made under Sample submittals, to demonstrate aesthetic effects, and to set quality standards for fabrication and installation.

1. Build mockup of typical roof edge, approximately 4 feet long, including seams, attachments, underlayment, and accessories.
2. Approval of mockups does not constitute approval of deviations from the Contract Documents contained in mockups unless Engineer specifically approves such deviations in writing.
3. Subject to compliance with requirements, approved mockups may become part of the completed Work if undisturbed at time of Substantial Completion.

1.8 DELIVERY, STORAGE, AND HANDLING

A. Do not store sheet metal flashing and trim materials in contact with other materials that might cause staining, denting, or other surface damage. Store sheet metal flashing and trim materials away from uncured concrete and masonry.

B. Protect strippable protective covering on sheet metal flashing and trim from exposure to sunlight and high humidity, except to extent necessary for period of sheet metal flashing and trim installation.

1.9 WARRANTY

A. Special Warranty on Finishes: Manufacturer agrees to repair finish or replace sheet metal flashing and trim that shows evidence of deterioration of factory-applied finishes within specified warranty period.

1. Exposed Panel Finish: Deterioration includes, but is not limited to, the following:

   a. Color fading more than 5 Hunter units when tested according to ASTM D 2244.
   b. Chalking in excess of a No. 8 rating when tested according to ASTM D 4214.
   c. Cracking, checking, peeling, or failure of paint to adhere to bare metal.

2. Finish Warranty Period: 20 years from date of Substantial Completion.

PART 2 - PRODUCTS

2.1 PERFORMANCE REQUIREMENTS

A. General: Sheet metal flashing and trim assemblies shall withstand wind loads, structural movement, thermally induced movement, and exposure to weather without failure due to defective manufacture, fabrication, installation, or other defects in construction. Completed sheet metal flashing and trim shall not rattle, leak, or loosen, and shall remain watertight.

B. Sheet Metal Standard for Flashing and Trim: Comply with NRCA's "The NRCA Roofing Manual" and SMACNA's "Architectural Sheet Metal Manual" requirements for dimensions and profiles shown unless more stringent requirements are indicated.

C. SPRI Wind Design Standard: Manufacture and install roof edge flashings tested according to SPRI ES-1 and capable of resisting the following design pressure:

1. Design Pressure: As indicated on Drawings.

D. Thermal Movements: Allow for thermal movements from ambient and surface temperature changes to prevent buckling, opening of joints, overstressing of components, failure of joint sealants, failure of connections, and other detrimental effects. Base calculations on surface temperatures of materials due to both solar heat gain and nighttime-sky heat loss.

1. Temperature Change: 120 deg F, ambient; 180 deg F, material surfaces.

2.2 SHEET METALS

A. General: Protect mechanical and other finishes on exposed surfaces from damage by applying strippable, temporary protective film before shipping.

B. Stainless-Steel Sheet: ASTM A 240 or ASTM A 666, Type 316, dead soft, fully annealed; with smooth, flat surface.

1. Finish: 4 (polished directional satin).

2.3 UNDERLAYMENT MATERIALS

A. Felt: ASTM D 226/D 226M, Type II (No. 30), asphalt-saturated organic felt; nonperforated.

B. Synthetic Underlayment: Laminated or reinforced, woven polyethylene or polypropylene, synthetic roofing underlayment; bitumen free; slip resistant; suitable for high temperatures over 220 deg F; and complying with physical requirements of ASTM D 226/D 226M for Type I and Type II felts.

1. Manufacturers: Subject to compliance with requirements, available manufacturers offering products that may be incorporated into the Work include, but are not limited to the following:

    a. Atlas Roofing Corporation.
    b. Intertape Polymer Group.
    c. Kirsch Building Products, LLC.
    d. Or approved equal.

C. Self-Adhering, High-Temperature Sheet: Minimum 30 mils thick, consisting of a slip-resistant polyethylene- or polypropylene-film top surface laminated to a layer of butyl- or SBS-modified asphalt adhesive, with release-paper backing; specifically designed to withstand high metal temperatures beneath metal roofing. Provide primer according to written recommendations of underlayment manufacturer.

1. Manufacturers: Subject to compliance with requirements, available manufacturers offering products that may be incorporated into the Work include, but are not limited to the following:

    a. Carlisle Coatings & Waterproofing Inc.
    b. Henry Company.
    c. Owens Corning.
    d. Or approved equal

2. Thermal Stability: ASTM D 1970; stable after testing at 240 deg F or higher.

3. Low-Temperature Flexibility: ASTM D 1970; passes after testing at minus 20 deg F or lower.

D. Slip Sheet: Rosin-sized building paper, 3 lb/100 sq. ft. minimum.

2.4 MISCELLANEOUS MATERIALS

A. General: Provide materials and types of fasteners, solder, protective coatings, sealants, and other miscellaneous items as required for complete sheet metal flashing and trim installation and as recommended by manufacturer of primary sheet metal or manufactured item unless otherwise indicated.

B. Fasteners: Wood screws, annular threaded nails, self-tapping screws, self-locking rivets and bolts, and other suitable fasteners designed to withstand design loads and recommended by manufacturer of primary sheet metal or manufactured item.

1. General: Blind fasteners or self-drilling screws, gasketed, with hex-washer head.

    a. Exposed Fasteners: Heads matching color of sheet metal using plastic caps or factory-applied coating. Provide metal-backed EPDM or PVC sealing washers under heads of exposed fasteners bearing on weather side of metal.
    b. Blind Fasteners: High-strength stainless-steel rivets suitable for metal being fastened.

2. Fasteners for Stainless-Steel Sheet: Series 300 stainless steel.

3. Fasteners for Zinc-Tin Alloy-Coated Stainless-Steel Sheet: Series 300 stainless steel.

C. Sealant Tape: Pressure-sensitive, 100 percent solids, polyisobutylene compound sealant tape with release-paper backing. Provide permanently elastic, nonsag, nontoxic, nonstaining tape 1/2 inch wide and 1/8 inch thick.

D. Elastomeric Sealant: ASTM C 920, elastomeric polyurethane, polysulfide, or silicone polymer sealant; of type, grade, class, and use classifications required to seal joints in sheet metal flashing and trim and remain watertight.

E. Butyl Sealant: ASTM C 1311, single-component, solvent-release butyl rubber sealant; polyisobutylene plasticized; heavy bodied for hooked-type expansion joints with limited movement.

F. Epoxy Seam Sealer: Two-part, noncorrosive, aluminum seam-cementing compound, recommended by aluminum manufacturer for exterior nonmoving joints, including riveted joints.

G. Bituminous Coating: Cold-applied asphalt emulsion according to ASTM D 1187.

H. Asphalt Roofing Cement: ASTM D 4586, asbestos free, of consistency required for application.

2.5 MANUFACTURED SHEET METAL FLASHING AND TRIM

A. Through-Wall, Ribbed, Sheet Metal Flashing: Manufacture through-wall sheet metal flashing for embedment in masonry, with ribs at 3-inch intervals along length of flashing to provide integral mortar bond. Manufacture through-wall flashing with interlocking counterflashing on exterior face, of same metal as flashing.

1. Stainless Steel: 0.019 inch, 26 ga thick.

a. Manufacturers: Subject to compliance with requirements, available manufacturers offering products that may be incorporated into the Work include, but are not limited to the following:

1) Cheney Flashing Company.
2) Hohmann & Barnard, Inc.
3) Keystone Flashing Company, Inc.
4) Approved equal.

B. Reglets: Units of type, material, and profile required, formed to provide secure interlocking of separate reglet and counterflashing pieces, and compatible with flashing indicated with factory-mitered and -welded corners and junctions with interlocking counterflashing on exterior face, of same metal as reglet.

1. Manufacturers: Subject to compliance with requirements, available manufacturers offering products that may be incorporated into the Work include, but are not limited to the following:

    a. Fry Reglet Corporation.
    b. Hohmann & Barnard, Inc.
    c. Keystone Flashing Company, Inc.
    d. Approved equal.

2. Material: Stainless steel, 0.019 inch thick.
3. Surface-Mounted Type: Provide with slotted holes for fastening to substrate, with neoprene or other suitable weatherproofing washers, and with channel for sealant at top edge.
4. Accessories:

    a. Flexible-Flashing Retainer: Provide resilient plastic or rubber accessory to secure flexible flashing in reglet where clearance does not permit use of standard metal counterflashing or where Drawings show reglet without metal counterflashing.
    b. Counterflashing Wind-Restraint Clips: Provide clips to be installed before counterflashing to prevent wind uplift of counterflashing's lower edge.

5. Finish: Mill.

2.6 FABRICATION, GENERAL

A. General: Custom fabricate sheet metal flashing and trim to comply with details shown and recommendations in cited sheet metal standard that apply to design, dimensions, geometry, metal thickness, and other characteristics of item required. Fabricate sheet metal flashing and trim in shop to greatest extent possible.

1. Fabricate sheet metal flashing and trim in thickness or weight needed to comply with performance requirements, but not less than that specified for each application and metal.
2. Obtain field measurements for accurate fit before shop fabrication.
3. Form sheet metal flashing and trim to fit substrates without excessive oil canning, buckling, and tool marks; true to line, levels, and slopes; and with exposed edges folded back to form hems.
4. Conceal fasteners and expansion provisions where possible. Do not use exposed fasteners on faces exposed to view.

B. Fabrication Tolerances: Fabricate sheet metal flashing and trim that is capable of installation to a tolerance of 1/4 inch in 20 feet on slope and location lines indicated on Drawings and within 1/8-inch offset of adjoining faces and of alignment of matching profiles.

C. Fabrication Tolerances: Fabricate sheet metal flashing and trim that is capable of installation to tolerances specified in MCA's "Guide Specification for Residential Metal Roofing."

D. Expansion Provisions: Form metal for thermal expansion of exposed flashing and trim.

1. Form expansion joints of intermeshing hooked flanges, not less than 1 inch deep, filled with butyl sealant concealed within joints.

2. Use lapped expansion joints only where indicated on Drawings.

E. Sealant Joints: Where movable, nonexpansion-type joints are required, form metal to provide for proper installation of elastomeric sealant according to cited sheet metal standard.

F. Seams: Fabricate nonmoving seams with flat-lock seams. Form seams and seal with elastomeric sealant unless otherwise recommended by sealant manufacturer for intended use. Rivet joints where necessary for strength.

G. Do not use graphite pencils to mark metal surfaces.

PART 3 - EXECUTION

3.1 EXAMINATION

A. Examine substrates, areas, and conditions, with Installer present, for compliance with requirements for installation tolerances, substrate, and other conditions affecting performance of the Work.

1. Verify compliance with requirements for installation tolerances of substrates.
2. Verify that substrate is sound, dry, smooth, clean, sloped for drainage, and securely anchored.
3. Verify that air- or water-resistant barriers have been installed over sheathing or backing substrate to prevent air infiltration or water penetration.

B. Proceed with installation only after unsatisfactory conditions have been corrected.

3.2 UNDERLAYMENT INSTALLATION

A. Felt Underlayment: Install felt underlayment, wrinkle free, using adhesive to minimize use of mechanical fasteners under sheet metal flashing and trim. Apply in shingle fashion to shed water, with lapped joints of not less than 2 inches.

B. Synthetic Underlayment: Install synthetic underlayment, wrinkle free, according to manufacturers' written instructions, and using adhesive where possible to minimize use of mechanical fasteners under sheet metal.

3.3 INSTALLATION, GENERAL

A. General: Anchor sheet metal flashing and trim and other components of the Work securely in place, with provisions for thermal and structural movement. Use fasteners, solder, protective coatings, separators, sealants, and other miscellaneous items as required to complete sheet metal flashing and trim system.

1. Install sheet metal flashing and trim true to line, levels, and slopes. Provide uniform, neat seams with minimum exposure of solder, welds, and sealant.
2. Install sheet metal flashing and trim to fit substrates and to result in watertight performance. Verify shapes and dimensions of surfaces to be covered before fabricating sheet metal.
3. Install exposed sheet metal flashing and trim with limited oil canning, and free of buckling and tool marks.
4. Torch cutting of sheet metal flashing and trim is not permitted.
5. Do not use graphite pencils to mark metal surfaces.

B. Protection: Where dissimilar metals contact each other, or where metal contacts pressure-treated wood or other corrosive substrates, protect against galvanic action or corrosion by painting contact surfaces with bituminous coating or by other permanent separation as recommended by sheet metal manufacturer or cited sheet metal standard.

1. Coat concealed side of uncoated-aluminum and stainless-steel sheet metal flashing and trim with bituminous coating where flashing and trim contact wood, ferrous metal, or cementitious construction.
2. Underlayment: Where installing sheet metal flashing and trim directly on cementitious or wood substrates, install underlayment and cover with slip sheet.

C. Expansion Provisions: Provide for thermal expansion of exposed flashing and trim. Space movement joints at maximum of 10 feet with no joints within 24 inches of corner or intersection.

1. Form expansion joints of intermeshing hooked flanges, not less than 1 inch deep, filled with sealant concealed within joints.
2. Use lapped expansion joints only where indicated on Drawings.

D. Fasteners: Use fastener sizes that penetrate wood blocking or sheathing not less than 1-1/4 inches for nails and not less than 3/4 inch for wood screws or substrate not less than recommended by fastener manufacturer to achieve maximum pull-out resistance.

E. Conceal fasteners and expansion provisions where possible in exposed work and locate to minimize possibility of leakage. Cover and seal fasteners and anchors as required for a tight installation.

F. Seal joints as required for watertight construction.

1. Use sealant-filled joints unless otherwise indicated. Embed hooked flanges of joint members not less than 1 inch into sealant. Form joints to completely conceal sealant. When ambient temperature at time of installation is between 40 and 70 deg F, set joint members for 50 percent movement each way. Adjust setting proportionately for installation at higher ambient temperatures. Do not install sealant-type joints at temperatures below 40 deg F.

2. Prepare joints and apply sealants to comply with requirements in Section 079200 "Joint Sealants."

G. Soldered Joints: Clean surfaces to be soldered, removing oils and foreign matter. Pre-tin edges of sheets with solder to width of 1-1/2 inches; however, reduce pre-tinning where pre-tinned surface would show in completed Work.

1. Do not use torches for soldering.
2. Heat surfaces to receive solder, and flow solder into joint. Fill joint completely. Completely remove flux and spatter from exposed surfaces.
3. Stainless-Steel Soldering: Tin edges of uncoated sheets, using solder for stainless steel and acid flux. Promptly remove acid flux residue from metal after tinning and soldering. Comply with solder manufacturer's recommended methods for cleaning and neutralization.

H. Rivets: Rivet joints where necessary for strength.

3.4 ROOF FLASHING INSTALLATION

A. General: Install sheet metal flashing and trim to comply with performance requirements, sheet metal manufacturer's written installation instructions, and cited sheet metal standard. Provide concealed fasteners where possible, and set units true to line, levels, and slopes. Install work with laps, joints, and seams that are permanently watertight and weather resistant.

B. Roof Edge Flashing: Anchor to resist uplift and outward forces according to recommendations in cited sheet metal standard unless otherwise indicated. Interlock bottom edge of roof edge flashing with continuous cleat anchored to substrate at staggered 3-inch centers.

C. Counterflashing: Coordinate installation of counterflashing with installation of base flashing. Insert counterflashing in reglets or receivers and fit tightly to base flashing. Extend counterflashing 4 inches over base flashing. Lap counterflashing joints minimum of 4 inches. Secure in waterproof manner by means of snap-in installation and sealant or lead wedges and sealant interlocking folded seam or blind rivets and sealant anchor and washer at 36-inch centers unless otherwise indicated.

D. Roof-Penetration Flashing: Coordinate installation of roof-penetration flashing with installation of roofing and other items penetrating roof. Seal with elastomeric sealant and clamp flashing to pipes that penetrate roof.

3.5 WALL FLASHING INSTALLATION

A. General: Install sheet metal wall flashing to intercept and exclude penetrating moisture according to cited sheet metal standard unless otherwise indicated. Coordinate installation of wall flashing with installation of wall-opening components such as windows, doors, and louvers.

B. Reglets: Install reglets to receive waterproofing and to receive through-wall flashings in outer face of concrete frame at exterior walls, where flashing is shown at lintels, shelf angles, and other conditions.

C. Opening Flashings in Frame Construction: Install continuous head, sill, jamb, and similar flashings to extend 4 inches beyond wall openings.

3.6 MISCELLANEOUS FLASHING INSTALLATION

A. Equipment Support Flashing: Coordinate installation of equipment support flashing with installation of roofing and equipment. Weld or seal flashing with elastomeric sealant to equipment support member.

B. Overhead-Piping Safety Pans: Suspend pans from structure above, independent of other overhead items such as equipment, piping, and conduit, unless otherwise indicated on Drawings. Pipe and install drain line to plumbing waste or drainage system.

3.7 ERECTION TOLERANCES

A. Installation Tolerances: Shim and align sheet metal flashing and trim within installed tolerance of 1/4 inch in 20 feet on slope and location lines indicated on Drawings and within 1/8-inch offset of adjoining faces and of alignment of matching profiles.

B. Installation Tolerances: Shim and align sheet metal flashing and trim within installed tolerances specified in MCA's "Guide Specification for Residential Metal Roofing."

3.8 CLEANING AND PROTECTION

A. Clean exposed metal surfaces of substances that interfere with uniform oxidation and weathering.

B. Clean and neutralize flux materials. Clean off excess solder.

C. Clean off excess sealants.

D. Remove temporary protective coverings and strippable films as sheet metal flashing and trim are installed unless otherwise indicated in manufacturer's written installation instructions. On completion of sheet metal flashing and trim installation, remove unused materials and clean finished surfaces as recommended by sheet metal flashing and trim manufacturer. Maintain sheet metal flashing and trim in clean condition during construction.

E. Replace sheet metal flashing and trim that have been damaged or that have deteriorated beyond successful repair by finish touchup or similar minor repair procedures.

END OF SECTION

No Text On This Page

SECTION 07 92 00 – JOINT SEALANTS

PART 1 - GENERAL

1.1 SUMMARY

A. Section Includes:

1. Silicone joint sealants.

1.2 PREINSTALLATION MEETINGS

A. Preinstallation Conference: Conduct conference at Project site.

1.3 ACTION SUBMITTALS

A. Product Data: For each joint-sealant product.

B. Samples for Verification: For each kind and color of joint sealant required, provide Samples with joint sealants in 1/2-inch-wide joints formed between two 6-inch-long strips of material matching the appearance of exposed surfaces adjacent to joint sealants.

C. Joint-Sealant Schedule: Include the following information:

1. Joint-sealant application, joint location, and designation.
2. Joint-sealant manufacturer and product name.
3. Joint-sealant color.

1.4 INFORMATIONAL SUBMITTALS

A. Qualification Data: For qualified testing agency.

B. Product Test Reports: For each kind of joint sealant, for tests performed by manufacturer and witnessed by a qualified testing agency.

C. Sample Warranties: For special warranties.

1.5 QUALITY ASSURANCE

A. Installer Qualifications: An authorized representative who is trained and approved by manufacturer.

B. Mockups: Install sealant in mockups of assemblies specified in other Sections that are indicated to receive joint sealants specified in this Section. Use materials and installation methods specified in this Section.

1.6 FIELD CONDITIONS

A. Do not proceed with installation of joint sealants under the following conditions:

1. When ambient and substrate temperature conditions are outside limits permitted by joint-sealant manufacturer or are below 40 deg F.
2. When joint substrates are wet.
3. Where joint widths are less than those allowed by joint-sealant manufacturer for applications indicated.
4. Where contaminants capable of interfering with adhesion have not yet been removed from joint substrates.

1.7 WARRANTY

A. Special Installer's Warranty: Installer agrees to repair or replace joint sealants that do not comply with performance and other requirements specified in this Section within specified warranty period.

1. Warranty Period: Two years from date of Substantial Completion.

B. Special Manufacturer's Warranty: Manufacturer agrees to furnish joint sealants to repair or replace those joint sealants that do not comply with performance and other requirements specified in this Section within specified warranty period.

1. Warranty Period: Five years from date of Substantial Completion.

C. Special warranties specified in this article exclude deterioration or failure of joint sealants from the following:

1. Movement of the structure caused by stresses on the sealant exceeding sealant manufacturer's written specifications for sealant elongation and compression.
2. Disintegration of joint substrates from causes exceeding design specifications.
3. Mechanical damage caused by individuals, tools, or other outside agents.
4. Changes in sealant appearance caused by accumulation of dirt or other atmospheric contaminants.

PART 2 - PRODUCTS

2.1 JOINT SEALANTS, GENERAL

A. Compatibility: Provide joint sealants, backings, and other related materials that are compatible with one another and with joint substrates under conditions of service and application, as demonstrated by joint-sealant manufacturer, based on testing and field experience.

B. Colors of Exposed Joint Sealants: As selected by Engineer from manufacturer's full range.

2.2 PAINT GRADE ACRYLIC LATEX SEALANT

A. Paint Grade Acrylic Latex: Acrylic Emulsion Sealant, non-sagging when tested according to ASTM C 834.

1. Basis of Design: Subject to compliance with requirements, provide “AC 20+Silicone” as manufactured by Pecora Corp., or an approved equal by one of the following:

   a. Tremco.
   b. BASF Building Systems.
   c. Approved equal.

2.3 NONSTAINING SILICONE JOINT SEALANTS

A. Nonstaining Joint Sealants: No staining of substrates when tested according to ASTM C 1248.

B. Silicone, Nonstaining, S, NS, 50, NT: Nonstaining, single-component, nonsag, plus 50 percent and minus 50 percent movement capability, nontraffic-use, neutral-curing silicone joint sealant; ASTM C 920, Type S, Grade NS, Class 50, Use NT, T2, M, G, A, O.

1. Manufacturers: Subject to compliance with requirements, available manufacturers offering products that may be incorporated into the Work include, but are not limited to the following:

   a. GE Construction Sealants; Momentive Performance Materials Inc.
   b. Pecora Corporation.
   c. The Dow Chemical Company.
   d. Or approved equal

2.4 JOINT-SEALANT BACKING

A. Sealant Backing Material, General: Nonstaining; compatible with joint substrates, sealants, primers, and other joint fillers; and approved for applications indicated by sealant manufacturer based on field experience and laboratory testing.

B. Bond-Breaker Tape: Polyethylene tape or other plastic tape recommended by sealant manufacturer for preventing sealant from adhering to rigid, inflexible joint-filler materials or joint surfaces at back of joint. Provide self-adhesive tape where applicable.

2.5 MISCELLANEOUS MATERIALS

A. Primer: Material recommended by joint-sealant manufacturer where required for adhesion of sealant to joint substrates indicated, as determined from preconstruction joint-sealant-substrate tests and field tests.

B. Cleaners for Nonporous Surfaces: Chemical cleaners acceptable to manufacturers of sealants and sealant backing materials, free of oily residues or other substances capable of staining or harming joint substrates and adjacent nonporous surfaces in any way, and formulated to promote optimum adhesion of sealants to joint substrates.

C. Masking Tape: Nonstaining, nonabsorbent material compatible with joint sealants and surfaces adjacent to joints.

PART 3 - EXECUTION

3.1 EXAMINATION

A. Examine joints indicated to receive joint sealants, with Installer present, for compliance with requirements for joint configuration, installation tolerances, and other conditions affecting performance of the Work.

B. Proceed with installation only after unsatisfactory conditions have been corrected.

3.2 PREPARATION

A. Surface Cleaning of Joints: Clean out joints immediately before installing joint sealants to comply with joint-sealant manufacturer's written instructions and the following requirements:

1. Remove all foreign material from joint substrates that could interfere with adhesion of joint sealant, including dust, paints (except for permanent, protective coatings tested and approved for sealant adhesion and compatibility by sealant manufacturer), old joint sealants, oil, grease, waterproofing, water repellents, water, surface dirt, and frost.
2. Clean porous joint substrate surfaces by brushing, grinding, mechanical abrading, or a combination of these methods to produce a clean, sound substrate capable of developing optimum bond with joint sealants. Remove loose particles remaining after cleaning operations above by vacuuming or blowing out joints with oil-free compressed air. Porous joint substrates include the following:
   a. Concrete.
   b. Masonry.
3. Remove laitance and form-release agents from concrete.
4. Clean nonporous joint substrate surfaces with chemical cleaners or other means that do not stain, harm substrates, or leave residues capable of interfering with adhesion of joint sealants. Nonporous joint substrates include the following:

a. Metal.

B. Joint Priming: Prime all joint substrates. Apply primer to comply with joint-sealant manufacturer's written instructions. Confine primers to areas of joint-sealant bond; do not allow spillage or migration onto adjoining surfaces.

C. Masking Tape: Use masking tape where required to prevent contact of sealant or primer with adjoining surfaces that otherwise would be permanently stained or damaged by such contact or by cleaning methods required to remove sealant smears. Remove tape immediately after tooling without disturbing joint seal.

3.3 INSTALLATION OF JOINT SEALANTS

A. General: Comply with joint-sealant manufacturer's written installation instructions for products and applications indicated, unless more stringent requirements apply.

B. Sealant Installation Standard: Comply with recommendations in ASTM C 1193 for use of joint sealants as applicable to materials, applications, and conditions indicated.

C. Install sealant backings of kind indicated to support sealants during application and at position required to produce cross-sectional shapes and depths of installed sealants relative to joint widths that allow optimum sealant movement capability.

1. Do not leave gaps between ends of sealant backings.
2. Do not stretch, twist, puncture, or tear sealant backings.
3. Remove absorbent sealant backings that have become wet before sealant application, and replace them with dry materials.

D. Install bond-breaker tape behind sealants where sealant backings are not used between sealants and backs of joints.

E. Install sealants using proven techniques that comply with the following and at the same time backings are installed:

1. Place sealants so they directly contact and fully wet joint substrates.
2. Completely fill recesses in each joint configuration.
3. Produce uniform, cross-sectional shapes and depths relative to joint widths that allow optimum sealant movement capability.

F. Tooling of Nonsag Sealants: Immediately after sealant application and before skinning or curing begins, tool sealants according to requirements specified in subparagraphs below to form smooth, uniform beads of configuration indicated; to eliminate air pockets; and to ensure contact and adhesion of sealant with sides of joint.

1. Remove excess sealant from surfaces adjacent to joints.
2. Use tooling agents that are approved in writing by sealant manufacturer and that do not discolor sealants or adjacent surfaces.
3. Provide concave joint profile per Figure 8A in ASTM C 1193 unless otherwise indicated.

3.4 FIELD QUALITY CONTROL

A. Field-Adhesion Testing: Field test joint-sealant adhesion to joint substrates as follows:

1. Extent of Testing: Test completed and cured sealant joints as follows:

   a. Perform one test for each 100 feet of joint length thereafter or one test per each floor per elevation.

2. Test Method: Test joint sealants according to Method A, Field-Applied Sealant Joint Hand Pull Tab, in Appendix X1 in ASTM C 1193 or Method A, Tail Procedure, in ASTM C 1521.

   a. For joints with dissimilar substrates, verify adhesion to each substrate separately; extend cut along one side, verifying adhesion to opposite side. Repeat procedure for opposite side.

3. Inspect tested joints and report on the following:

   a. Whether sealants filled joint cavities and are free of voids.
   b. Whether sealant dimensions and configurations comply with specified requirements.
   c. Whether sealants in joints connected to pulled-out portion failed to adhere to joint substrates or tore cohesively. Include data on pull distance used to test each kind of product and joint substrate. Compare these results to determine if adhesion complies with sealant manufacturer's field-adhesion hand-pull test criteria.

4. Record test results in a field-adhesion-test log. Include dates when sealants were installed, names of persons who installed sealants, test dates, test locations, whether joints were primed, adhesion results and percent elongations, sealant material, sealant configuration, and sealant dimensions.

5. Repair sealants pulled from test area by applying new sealants following same procedures used originally to seal joints. Ensure that original sealant surfaces are clean and that new sealant contacts original sealant.

B. Evaluation of Field-Adhesion-Test Results: Sealants not evidencing adhesive failure from testing or noncompliance with other indicated requirements will be considered satisfactory. Remove sealants that fail to adhere to joint substrates during testing or to comply with other requirements. Retest failed applications until test results prove sealants comply with indicated requirements.

3.5 CLEANING

A. Clean off sealant or sealant smears adjacent to joints as the Work progresses by methods and with cleaning materials approved in writing by manufacturers of joint sealants and of products in which joints occur.

3.6 PROTECTION

A. Protect joint sealants during and after curing period from contact with contaminating substances and from damage resulting from construction operations or other causes so sealants are without deterioration or damage at time of Substantial Completion. If, despite such protection, damage or deterioration occurs, cut out, remove, and repair damaged or deteriorated joint sealants immediately so installations with repaired areas are indistinguishable from original work.

END OF SECTION

No Text On This Page

SECTION 08 06 71 – DOOR HARDWARE SCHEDULE

PART 1 - GENERAL

A. Refer to PART 1 in each of the specification sections listed in 3.1.C below.

PART 2 - PRODUCTS

2.1 SCHEDULED DOOR HARDWARE

A. Refer to “PART 3 – EXECUTION” for required specification sections.

PART 3 - EXECUTION

3.1 DOOR HARDWARE SETS

A. The door hardware sets represent the design intent and direction of the Engineer. They are a guideline only and should not be considered a detailed hardware schedule. Discrepancies, conflicting hardware and missing items should be brought to the attention of the Engineer with corrections made prior to the bidding process. Omitted items not included in a hardware set should be scheduled with the appropriate additional hardware required for proper application and functionality.

B. The supplier is responsible for handing and sizing all products and providing the correct option for the appropriate door type and material where more than one is presented in the hardware sets. Quantities listed are for each pair of doors, or for each single door.

C. Products listed in the hardware sets indicate basis of design. Subject to compliance with requirements, provide the basis of design product or an approved equal. All products shall be supplied by and in accordance with the requirements described in the specification section 08 71 00 Door Hardware as noted for each item.

D. Manufacturer’s Abbreviations:

1. MK - McKinney
2. PE - Pemko
3. SA - SARGENT
4. NO – Norton

Hardware Sets

Set: 1.0

Doors: N03, S03

Description: Exterior storeroom function exit device - single

3 Hinge (heavy weight)	TA386 FT	US32D	MK	087100
1 Rim Exit Device, Storeroom	DG264 16 19 8804 ETME	US32D	SA	087100
1 Mortise Cylinder	complete/ permanent core as req'd	US15	SA	087100
1 Door Closer	UNI7500	689	NO	087100
1 Gasketing	290APK x 2891APK		PE	087100

Set: 2.0

Doors: N01, N02, S01, S02

Description: Exterior storeroom function exit device - single

1 Continuous Hinge	CFM83SLF-HD1		PE	087100
1 Rim Exit Device, Storeroom	DG264 16 19 8804 ETME	US32D	SA	087100
1 Mortise Cylinder	complete/ permanent core as req'd	US15	SA	087100
1 Door Closer	UNI7500	689	NO	087100
1 Gasketing	290APK x 2891APK		PE	087100

END OF SECTION

SECTION 08 11 19 – STAINLESS STEEL DOORS AND FRAMES

PART 1 - GENERAL

1.1 SUMMARY

A. Section Includes:

1. Stainless steel, hollow metal door.
2. Stainless steel, hollow metal frame.

1.2 DEFINITIONS

A. Stainless Steel Sheet Thicknesses: Indicated as the specified thicknesses for which over and under thickness tolerances apply, according to ASTM A 480/A 480M.

1.3 SUBMITTALS

A. Product Data: Include construction details, material descriptions, core descriptions and finishes for each type of stainless steel door and frame specified.

B. Shop Drawings: In addition to requirements below, provide a schedule of stainless steel door and frame using same reference numbers for details and opening as those on Drawings:

1. Elevations of door design.
2. Details of door, including vertical and horizontal edge details.
3. Frame details, including dimensioned profiles.
4. Details and locations of reinforcement and preparations for hardware.
5. Details of wall opening condition.
6. Details of anchorages, accessories, joints, and connections.

C. Samples for Verification: For each type of exposed finish required.

1.4 QUALITY ASSURANCE

A. Installer Qualifications: An employer of workers trained and approved by manufacturer.

B. Source Limitations: Obtain stainless steel door and frame through one source from a single manufacturer.

1.5 DELIVERY, STORAGE, AND HANDLING

A. Deliver door and frame palletized, wrapped, or crated to provide protection during transit and Project site storage. Do not use nonvented plastic.

B. Deliver welded frame with two removable spreader bars across bottom of frame, tack welded to jambs and mullions.

C. Store door and frame under cover at Project site. Place units in a vertical position with heads up, spaced by blocking, on minimum 4-inch- high, wood blocking. Avoid using nonvented plastic or canvas shelters that could create a humidity chamber.

1. If wrapper on door become wet, remove cartons immediately.

1.6 PROJECT CONDITIONS

A. Field Measurements: Verify openings by field measurements before fabrication and indicate measurements on Shop Drawings.

B. Established Dimensions: Where field measurements cannot be made without delaying the Work, establish opening dimensions and proceed with fabricating stainless steel frame without field measurements. Coordinate wall construction to ensure that actual opening dimensions correspond to established dimensions.

1.7 COORDINATION

A. Coordinate installation of anchorages for stainless steel frame. Furnish setting drawings, templates, and directions for installing anchorages, including sleeves, masonry inserts, anchor bolts, and items with integral anchors, that are to be embedded in masonry. Deliver such items to Project site in time for installation.

PART 2 - PRODUCTS

2.1 MANUFACTURERS

A. Subject to compliance with requirements, provide products by one of the following:

1. Ceco Door Products; an ASSA ABLOY Group Company.
2. CURRIES Company; an ASSA ABLOY Group Company.
3. Fleming Door Products Ltd.; an ASSA ABLOY Group Company.
4. Pioneer Industries, Inc.
5. Or approved equal

2.2 MATERIALS

A. Stainless Steel Sheet: ASTM A 666, austenitic stainless steel, Type indicated.

B. Cold-Rolled Steel Sheet: ASTM A 1008/A 1008M, Commercial Steel (CS), Type B; suitable for exposed applications.

C. Hot-Rolled Steel Sheet: ASTM A 1011/A 1011M, Commercial Steel (CS), Type B; free of scale, pitting, or surface defects; pickled and oiled.

D. Metallic Coated Steel Sheet: ASTM A 653/A 653M, Commercial Steel (CS), Type B; with minimum A60 zinc-iron-alloy (galvannealed) coating designation.

E. Supports and Anchors: After fabricating, galvanize units to be built into exterior walls according to ASTM A 153/A 153M, Class B.

F. Inserts, Bolts, and Fasteners: Provide items to be built into exterior walls, hot-dip galvanized according to ASTM A 153/A 153M.

G. Grout: Comply with Section 04 81 00 -Unit Masonry Assemblies.

H. Grout: Comply with ASTM C 476, with a slump of 4 inches for stainless steel door frames built into concrete or masonry, as measured according to ASTM C 143/C 143M.

I. Bituminous Coating: Cold applied asphalt mastic, SSPC Paint 12, compounded for 15-mil dry film thickness per coat. Provide inert type noncorrosive compound free of asbestos fibers, sulfur components, and other deleterious impurities.

2.3 STAINLESS-STEEL DOORS

A. General: Provide flush design door, not less than 1-3/4 inches thick, of seamless hollow construction, unless otherwise indicated. Construct door with smooth, flush surfaces without visible joints or seams on exposed faces.

1. Provide fully welded seams ground smooth. No chemical fillers are allowed.

B. Face Sheets: Fabricated from minimum 0.042-inch- thick, stainless steel sheet, Type as follows:

1. Door: Type 304.

C. Core Construction: Fabricate door with core indicated.

1. Steel Stiffened Core: 0.026-inch- thick, steel vertical stiffeners extending full door height, with vertical webs spaced not more than 6 inches apart, spot welded to face sheets a maximum of 5 inches o.c.

D. Top and Bottom Channels: Minimum 0.053-inch- thick, steel channel spot welded, not more than 6 inches o.c., to face sheets.

1. Tops and bottoms of door reinforced with inverted horizontal channels, continuous across full width of door, of same material as face sheets so flanges of channels are even with bottom and top edges of face sheets.

2. Top and bottom edges of exterior door closed with closing channels of same material and thickness as face sheets; welded so webs of channels are flush with door edges.

E. Insulated Core Stainless Steel Doors: Polyurethane Core: Minimum U-Value – 61.

F. Hardware Reinforcement: Fabricate reinforcement plates from stainless steel or steel, as indicated in Part 2 "Fabrication" Article, to comply with the following minimum sizes:

1. Hinges and Pivots: Minimum 0.167 inch thick by 1-1/2 inches wide by 6 inches longer than hinge, secured by not less than 6 spot welds.
2. Lock Face, Flush Bolts, Closers, and Concealed Holders: Minimum 0.093 inch thick.
3. All Other Surface Mounted Hardware: Minimum 0.067 inch thick.

2.4 STAINLESS-STEEL FRAMES

A. General: Fabricate frames of construction indicated, with faces of corners mitered and contact edges closed tight.

1. Frames for Door: Fully welded.
2. Door Frame for Openings 48 Inches Wide or Less: Fabricated from 0.053-inch-thick, stainless steel sheet.

B. Material: Fabricate frames from stainless steel sheet, Type as follows:

1. Frames: Type 304.

C. Hardware Reinforcement: Fabricate reinforcement plates from stainless steel or steel, as indicated in Part 2 "Fabrication" Article, to comply with the following minimum sizes:

1. Hinges and Pivots: Minimum 0.167 inch thick by 1-1/4 inches wide by 10 inches long, secured by not less than 6 spot welds.
2. Strikes, Flush Bolts, Hold Open Arms, and Closers: Minimum 0.093 inch thick.
3. Surface Mounted Hardware: Minimum 0.093 inch thick.

D. Head Reinforcement: Minimum 0.093-inch- thick, steel channel or angle stiffener.

E. Jamb Anchors: Formed from material indicated in Part 2 "Fabrication" Article.

F. Floor Anchors: Formed from material indicated in Part 2 "Fabrication" Article, not less than 0.067 inch thick, and as follows:

1. Monolithic Concrete Slabs: Clip type anchors, with two holes to receive fasteners.

G. Plaster Guards: Formed from material indicated in Part 2 "Fabrication" Article, not less than 0.016 inches thick.

2.5 STOPS AND MOLDINGS

A. Fixed Frame Moldings: Formed integral with stainless steel frames, minimum 5/8-inch high, unless otherwise indicated.

2.6 FABRICATION

A. General: Fabricate stainless steel door and frame to be rigid and free of defects, warp, or buckle. Accurately form metal to required sizes and profiles, with minimum radius for thickness of metal. Where practical, fit and assemble units in manufacturer's plant. To ensure proper assembly at Project site, clearly identify work that cannot be permanently factory assembled before shipment.

B. Stainless Steel Door: Comply with ANSI A250.4, Level A.

1. Exterior Door: Provide weep hole openings in bottom of exterior door to permit moisture to escape. Seal joints in top edges of door against water penetration.
2. Edges: Door face sheets joined at vertical edges by continuous weld extending full height of door; with edges ground and polished, providing smooth, flush surfaces with no visible seams.
3. Edges: Both vertical door edges joined by visible, continuous interlocking seam (lock seam) full height of door.
4. Edges: Both vertical door edges joined by visible seam that is projection, spot, or tack welded on inside edges of door at 6 inches o.c.
5. Door for Moderately Corrosive Applications: Fabricate door with door faces and internal components, including stiffeners and hardware reinforcements, from Type 304 stainless steel sheet.
6. Undercut door maximum 1/2 inch where indicated or required.

C. Stainless Steel Frame: Weld flush face joints continuously; grind, fill, dress, and make smooth, flush, and invisible. Where frames are fabricated in sections due to shipping or handling limitations, provide alignment plates or angles at each joint, fabricated from same thickness metal as frames.

1. Frames for Moderately Corrosive Applications: Fabricate frames with internal components, including anchors, plaster guards, and hardware reinforcements, from Type 304 stainless steel sheet.

1. Provide countersunk, flat- or oval head exposed screws and bolts for exposed fasteners, unless otherwise indicated.
2. Plaster Guards: Weld guards to frame at back of hardware mortises in frames installed in concrete or masonry.
3. Where installed in masonry, leave vertical mullions in frames open at top for grouting.
4. Floor Anchors: Weld anchors to bottom of jambs and mullions with at least four spot welds per anchor.
5. Jamb Anchors: Provide number and spacing of anchors as indicated on the Drawings.

6. Head Reinforcement: For frames more than 48 inches wide, provide continuous head reinforcement for full width of opening, welded to back of frame at head.

D. Hardware Preparation: Factory prepare stainless steel door and frame to receive templated mortised hardware; include cutouts, reinforcement, mortising, drilling, and tapping, according to the Door Hardware Schedule and templates furnished as specified in Section 087100 – “Door Hardware”.

1. Reinforce door and frame to receive nontemplated mortised and surface mounted door hardware.

2. Locate door hardware as indicated, or if not indicated, according to HMMA 831, "Recommended Hardware Locations for Custom Hollow Metal Doors and Frames."

2.7 STAINLESS-STEEL FINISHES

A. General: Comply with NAAMM's "Metal Finishes Manual for Architectural and Metal Products" for recommendations for applying and designating finishes. Remove tool and die marks and stretch lines or blend into finish.

1. Grind and polish surfaces to produce uniform, directionally textured, polished finish indicated, free of cross scratches.

   a. Grain for Door: Vertical (long dimension of door) unless otherwise indicated.
   b. Grain for Frame Jamb: Vertical (long dimension of jamb).
   c. Grain for Frame Head: Vertical.

B. Protect mechanical finishes on exposed surfaces from damage by applying a strippable, temporary protective covering before shipping.

C. Finish stainless steel door and frame after assembly.

D. Directional Satin Finish: No. 4 finish.

E. When polishing is completed, passivate and rinse surfaces. Remove embedded foreign matter and leave surfaces chemically clean.

PART 3 - EXECUTION

3.1 EXAMINATION

A. Examine substrates, areas, and conditions, with Installer present, for compliance with requirements for installation tolerances and other conditions affecting performance of stainless steel door and frame.

1. Examine roughing-in for embedded and built-in anchors to verify actual locations of stainless steel door-frame connections before frame installation.
2. For the record, prepare written report, endorsed by Installer, listing conditions detrimental to performance of work.
3. Proceed with installation only after unsatisfactory conditions have been corrected.

3.2 PREPARATION

A. Remove welded-in shipping spreaders installed at factory.

B. Prior to installation and with installation spreaders in place, adjust and securely brace stainless steel door frame for squareness, alignment, twist, and plumb to the following tolerances:

1. Squareness: Plus or minus 1/16 inch, measured at door rabbet on a line 90 degrees from jamb perpendicular to frame head.
2. Alignment: Plus or minus 1/16 inch, measured at jambs on a horizontal line parallel to plane of wall.
3. Twist: Plus or minus 1/16 inch, measured at opposite face corners of jambs on parallel lines, and perpendicular to plane of wall.
4. Plumbness: Plus or minus 1/16 inch, measured at jambs on a perpendicular line from head to floor.

C. Drill and tap door and frame to receive nontemplated mortised and surface mounted door hardware.

3.3 INSTALLATION

A. General: Install stainless steel door and frame plumb, rigid, properly aligned, and securely fastened in place; comply with Drawings and manufacturer's written instructions.

B. Stainless Steel Frame: Install stainless steel frame for door of size and profile indicated.

1. Set frame accurately in position; plumbed, aligned, and braced securely until permanent anchors are set. After wall construction is complete, remove temporary braces, leaving surfaces smooth and undamaged.

    a. Where frame is fabricated in sections due to shipping or handling limitations, field splice at approved locations by welding face joint continuously; grind, fill, dress, and make splice smooth, flush, and invisible on exposed faces.
    b. Remove temporary braces necessary for installation only after frame has been properly set and secured.
    c. Check plumb, squareness, and twist of frames as walls are constructed. Shim as necessary to comply with installation tolerances.

d. Apply bituminous coating to backs of frames that are filled with mortar, grout, and plaster containing anti-freezing agents.

2. Floor Anchors: Provide floor anchors for each jamb and mullion that extends to floor and secure with postinstalled expansion anchors.

   a. Floor anchors may be set with powder-actuated fasteners instead of postinstalled expansion anchors, if so indicated and approved on Shop Drawings.

3. Installation Tolerances: Adjust stainless-steel door frame for squareness, alignment, twist, and plumb to the following tolerances:

   a. Squareness: Plus or minus 1/16 inch, measured at door rabbet on a line 90 degrees from jamb perpendicular to frame head.
   b. Alignment: Plus or minus 1/16 inch, measured at jambs on a horizontal line parallel to plane of wall.
   c. Twist: Plus or minus 1/16 inch, measured at opposite face corners of jambs on parallel lines, and perpendicular to plane of wall.
   d. Plumbness: Plus or minus 1/16 inch, measured at jambs at floor.

C. Stainless Steel Door: Fit non-fire rated door accurately in frames with the following clearances:

1. Non-Fire Rated Door:

   a. Jambs and Head: 1/8 inch plus or minus 1/16 inch.
   b. Between Bottom of Door and Top of Threshold: Maximum 3/8 inch.
   c. Between Bottom of Door and Top of Finish Floor (No Threshold): Maximum 3/4 inch.

3.4 ADJUSTING AND CLEANING

A. Final Adjustments: Check and readjust operating hardware items immediately before final inspection. Leave work in complete and proper operating condition. Remove and replace defective work including stainless steel door or frame that are warped, bowed, or otherwise unacceptable.

B. Clean grout and other bonding material off stainless steel door and immediately after installation.

C. Stainless Steel Touchup: Immediately after erection, smooth any abraded areas of stainless steel and polish to match undamaged finish.

END OF SECTION

SECTION 08 39 00 – WATERTIGHT HATCHES

PART 1 - GENERAL

1.1 SUMMARY

A. Section Includes:

1. Watertight Access Hatches

1.2 DEFINITIONS

A. ASTM B 209 - Standard Specification for Aluminum and Aluminum-Alloy Sheet and Plate.

B. ASTM B 211 - Standard Specification for Aluminum and Aluminum-Alloy Bar, Rod, and Wire.

C. ASTM A 36 - Standard Specification for Carbon Structural Steel.

D. ASTM A 240 - Standard Specification for Chromium and Chromium-Nickel Stainless Steel Plate, Sheet, and Strip for Pressure Vessels and for General Applications.

E. AISI CL 304 - American Iron and Steel Institute.

F. Aluminum Association - Specification for Aluminum Structures, 7th Edition.

G. AWS D1.2 - Structural Welding Code - Aluminum.

H. Aluminum Structures - A Guide to Their Specifications and Design.

I. ASME Structural Welding Code Section IX.

J. FEMA Technical Bulletin 3-93 - Non-Residential Flood Proofing.

K. Aluminum Design Manual (Latest applicable edition).

L. ACI American Concrete Institute (Latest applicable edition).

M. AISC American Institute of Steel Construction (Latest applicable edition).

N. SEI/ASCE 7 (Latest applicable addition) Minimum Design Loads for Buildings and Other Structures.

O. AWS D1.2 - Structural Welding Code - Aluminum.

P. U.S. Army Corps of Engineers, EP 1165-2-314 - Flood Proofing Regulations, 15 December 1995.

Q. FEMA #114 - Engineering Principles and Practices of Retrofitting Flood-Prone Residential Structures.

R. ASCE 24 Flood Resistant Design and Construction (Latest applicable addition)

1.3 PERFORMANCE REQUIREMENTS

A. Design watertight flood hatch to control short-term load pressure types as indicated on the structural drawings. All water pressure loads and operating loads are transferred to the mounting structure.
   a. Hydrostatic Loading
   b. Hydrodynamic Loading

B. Margin of Safety: Engineer product to conform to the design requirements that are based on the latest adopted edition of the NYC Building Code.

C. Water Density: Assume 64 pcf, unless otherwise noted on drawings.

1.4 SUBMITTALS

A. Manufacturer's data sheets on each product to be used, including:
   a. Storage and handling requirements and recommendations.
   b. Installation instructions.

B. Shop Drawings: Provide shop drawings showing layout, profiles, and product components, including anchorage, hardware, and finishes. Include dimensional plans, applicable material specifications, elevations and sections detailing mounting and connections, and load diagrams.

C. Calculations: Upon signed finalization and approval of dimensions, mounting location material and configuration, and load requirements;
   a. Submit stamped calculations by a registered professional engineer licensed in New York, to verify the flood door's ability to withstand the design loading.

D. Closeout Submittals: Provide Operation and Maintenance data to include methods for maintaining installed products, precautions against cleaning materials and methods detrimental to finishes and performance

1.5 QUALITY ASSURANCE

A. Manufacturer Qualifications: Manufacturer must demonstrate a minimum of five (5) years successful experience in design and manufacture of similar flood related closures. Upon request, provide supporting evidence including list of installations, descriptions, name and method of contact.

B. Minimum Qualifications: Manufacturer must demonstrate compliance and certification of a Quality Management System administered by the International Organization for Standardization (ISO). Documentation of current certification status to be provided upon request.

C. Welder Qualifications: Welders Certified in accordance with American Welding Society Procedures for applicable material used in production of specified product.

1.6 DELIVERY, STORAGE, AND HANDLING

A. Store products in manufacturer's unopened packaging container with identification labels intact until ready for installation.
B. Protect materials from exposure to moisture during storage.
C. Store materials in a dry, warm, ventilated weathertight location. If outdoor storage is required, block materials to store at an incline, to prevent pooling of any moisture and promote runoff. Tarp materials in a tent-like arrangement, elevated above the product with open sides to allow airflow. Store all other hardware in a dry controlled environment.
D. Use caution when unloading and handling product to avoid bending, denting, crushing, or other damage to the product.
E. When using forklifts, use forks of proper length to fully support product being moved. Consult shop drawings or consult with factory for proper lift points.

1.7 PROJECT CONDITIONS

A. Maintain environmental conditions (temperature, humidity, and ventilation) within limits recommended by manufacturer for optimum results. Do not install products under environmental conditions outside manufacturer's indicated limits.

1.8 COORDINATION

A. Contractor shall conduct site survey and provide to flood barrier manufacturer, prior to manufacturers' commencement of shop drawings, the actual site conditions of the mounting location, to include; material type, dimensions and configuration, interferences with mounting surface, or any other condition that may impact the ability of the flood hatch to be properly installed.

B. Coordinate work with other operations and installation of adjacent materials to avoid damage.

1.9 WARRANTY

A. 1-Year Limited Against Defects and Workmanship.

PART 2 - PRODUCTS

2.1 MANUFACTURERS

A. Basis of Design: Subject to compliance with requirements, provide "D3HA Watertight Hatch" as manufactured by Presay Corporation, or approved equal from one of the following:

1. PS Flood Barriers.
2. Walz & Krenzer.
3. Approved equal.

2.2 MATERIALS

A. Structural Steel Plates and Shapes: ASTM A36 type 304 stainless steel.

B. Finish: Brush-off blast clean per SSPC-SP7, prime with one coat rust inhibitive, lead free, red primer.

C. Hatch Gasket: Type 25 durometer neoprene molded rather then extruded, with fully molded corners, no mitered joints allowed.

D. Hardware:

1. Hinges: Flush heavy-duty low friction hinges with slotted blades to protect the hinges from the pressure load.

2. Dogs: Provide stainless steel rollers; number of dogs dictated by hatch size, spacing to be suitable for distributing loads equally to each. The handle shall be provided with an “o” ring seal and two oil-impregnated bronze flange bearings to maintain shaft alignment. When not in the dogged position, the handles shall be held in the stored position by disk springs. Each dog shall be equipped with a means for adjusting seal compression after installation in the field.

2.3 DESIGN

A. Watertight hatch shall be designed with a minimum 2:1 factor of safety based on material strength, and shall provide an effective seal against the design pressure.

B. The design of the hatch shall allow the pressure on the hatch to be transmitted to the frame and/or dogs.

C. The hatch shall provide a rectangular opening with square corners for easy passage.

D. Frame shall include suitable anchors for embedment in concrete.

2.4 FABRICATION

A. The edge coaming contacting the door gasket shall be machined, rather than as rolled, to maximize sealing.

2.5 INSPECTION AND TEST

A. All welds on steel assemblies that may be potential “leak path” shall be liquid penetrant inspected in accordance with ASME section VIII Div. of Appendix 8.

B. Finished assembly, or assembly similar in design shall be factory leak tested to verify that it will withstand the design hydrostatic pressure.

PART 3 - EXECUTION

3.1 INSTALLATION

A. Install special door in accordance with manufacturer's instructions and approved shop drawings.

END OF SECTION

No Text On This Page

SECTION 08 42 39 – REMOVABLE ALUMINUM FLOOD BARRIERS

PART 1 - GENERAL

1.1 SUMMARY

A. Section Includes:

1. Flood plank--type barriers with jambs, planks, sill, and latching hardware.

1.2 SUBMITTALS

A. Manufacturer's data sheets on each product to be used, including:

1. Storage and handling requirements and recommendations.
2. Installation instructions.

B. Shop Drawings: Provide shop drawings showing layout, profiles, and product components, including anchorage, hardware, and finishes. Include dimensional plans, applicable material specifications, elevations and sections detailing mounting and connections, and load diagrams.

C. Calculations: Upon signed finalization and approval of dimensions, mounting location material and configuration, and load requirements:

1. Submit stamped calculations by a registered professional engineer from within the state or territory where the project will be constructed or substantially improved, to verify the flood barrier's ability to withstand the design loading.

1.3 CLOSEOUT SUBMITTALS

A. Closeout Submittals: Provide Operation and Maintenance data to include methods for maintaining installed products, precautions against cleaning materials and methods detrimental to finishes and performance.

1.4 QUALITY ASSURANCE

A. Manufacturer Qualifications: Manufacturer must demonstrate a minimum of five (5) years successful experience in design and manufacture of similar flood related closures. Upon request, provide supporting evidence including list of installations, descriptions, name and method of contact.

B. Minimum Qualifications: Manufacturer must demonstrate compliance and certification of a Quality Management System administered by the International Organization for Standardization (ISO). Documentation of current certification status to be provided upon request.

C. Welder Qualifications: Welders Certified in accordance with American Welding Society Procedures for applicable material used in production of specified product.

1.5 DELIVERY, STORAGE, AND HANDLING

A. Store products in manufacturer's unopened packaging container with identification labels intact until ready for installation.

B. Protect materials from exposure to moisture during storage.

C. Store materials in a dry, warm, ventilated weathertight location. If outdoor storage is required, block materials to store at an incline, to prevent pooling of any moisture and promote runoff. Tarp materials in a tent-like arrangement, elevated above the product with open sides to allow airflow. Store all other hardware in a dry controlled environment.

D. Use caution when unloading and handling product to avoid bending, denting, crushing, or other damage to the product.

E. When using forklifts, use forks of proper length to fully support product being moved. Consult Approved for Construction drawings or consult with factory for proper lift points.

1.6 PROJECT CONDITIONS

A. Maintain environmental conditions (temperature, humidity, and ventilation) within limits recommended by manufacturer for optimum results. Do not install products under environmental conditions outside manufacturer's indicated limits.

1.7 COORDINATION

A. Conduct site survey and provide to flood barrier manufacturer, prior to manufacturers' commencement of shop drawings; the actual site conditions of the mounting location, to include; material type, dimensions and configuration, interferences with mounting surface, or any other condition that may impact the ability of the flood barrier to be properly installed.

B. Coordinate work with other operations and installation of adjacent materials to avoid damage.

1.8 WARRANTY

A. Manufacturer's Standard Warranty: Product to be free from defects in material and workmanship for a period of one (1) year from date of shipment.

PART 2- PRODUCTS

2.1 PERFORMANCE REQUIREMENTS

A. Design watertight flood planks to support, solely or in combinations of, temporary super-imposed live loads indicated below and as shown on the structural drawings. All applied types of flood related loadings are transferred from the flood product barriers, solely or

in combinations of, by mullion anchorage to structural floor slabs and/or jamb anchorage and direct pressure contact to structural walls or other structural elements.

1. Hydrostatic Loading.
2. Hydrodynamic Loading.
3. Wind Loading.

B. Engineering Code Practices: Engineer flood products to conform to the design requirements that are based on the latest adopted edition of the NYC Building Code. LRFD and/or ASD methodologies are applied as appropriate to align with specific project specifications and/or limited published material data.

C. Water Density: 64 pcf, unless otherwise noted on “Approved for Construction” drawings.

2 2 MANUFACTURERS

A. Watertight Flood Plank Barriers:

Basis of Design: Subject to compliance with requirements, provide “Flood Logs” as manufactured by Flood Panel Ltd. A division of Architectural Metals Ltd., or approved equal from one of the following:

1. PS Flood Barriers
2. Flood Control International.
3.Approved equal.

B. Single Source Responsibilities: Obtain all watertight barriers and flood plank assemblies and equipment from single manufacturer.

2.3 EQUIPMENT

A. Products Details:

1. Sealing Requirements: Flood Plank and gasket design shall provide an effective barrier against short-term high-water situations, to the protection level indicated on drawings.
2. Latching: Provide with pad-lockable latching to secure deployed barrier from tamper or theft. One (1) latch per jamb.
3. Operation: Flood Planks and latches to be non-handed to allow for reversible installation.
4. Mounting/Load Transfer: Anchor to existing structure. Flood Plank designed for specified hydrostatic pressure (and other loads as specified) and will transfer loads to adjacent structure.
5. Frame to be cast-in-place or anchored utilizing mechanical, chemical or other framing methods as designed. Manufacturer to include all anchors, water-stop, and sealants, as designed, unless otherwise noted.
6. Jamb mounting location:
   a. Wall Face Mount:

1) Positive Pressure Loading, (direction of loading against flood plank so as to force the barrier against the wall structure. "Seating").
2) Provide compression gasket which requires no inflation.

b. Between-Wall Mount: (jamb mounted within the wall opening).

1) Provide compression gasket which requires no inflation.

2.4 MATERIALS

A. Flood Plank: Aluminum: 6000 Series alloy.

B. Gaskets: Factory mounted, compressible rubber type, field replaceable. Gasket does not require air inflation.

1. Material: UV resistant EPDM unless otherwise noted.

C. Frame to include jamb and optional sill members for field locating and installation on structure. Jamb members to be designed and fabricated with appropriate material as required for the loading.

1. Aluminum of appropriate size and strength with welded or mechanical fastened construction.

D. Sill:
1. Embedded angle with Nelson studs, Stainless Steel Type 304, mill finish.

E. Frame Mounting Hardware: Provide anchors, sealant, and water stop, as required.

F. Operating Hardware:

1. Provide hardware sized for the size and weight of the flood plank and loads.
2. Hardware to be factory located on jambs and plank panels, as practical.
3. Latching hardware to be as indicated on the "Approved for Construction" Drawings.
4. Flood plank panel to be factory prepared for applicable latching devices.

G. Aluminum: Mill finish, welds ground smooth, not polished.

H. Labeling. Each watertight plank and jamb will be individually identified for matched installation.

I. Instruction Placard: Provide pictorial and written operation instruction placards on flood plank.

2.5 FABRICATION

a. Fit and factory assemble items in largest practical sections, for shipment to site.

b. Fabricate items with joints tightly fitted and secured.

c. Supply components required for anchorage of fabrications.

PART 3 - EXECUTION

3.1 EXAMINATION

A. Do not begin installation until substrates have been properly prepared.

B. Inspect opening for compliance with flood plank manufacturer requirements. Verify opening conditions are within required tolerances.

3.2 PREPARATION

A. Clean surfaces thoroughly prior to installation.

B. Prepare surfaces using the methods recommended by the manufacturer for achieving the best result for the substrate under the project conditions.

3.3 INSTALLATION

A. Install in accordance with manufacturer's installation instructions, "Approved for Construction" Drawings, shipping, handling, and storage instructions, and product carton instructions for installation.

B. Sills, jambs, and mullions shall be installed level, square, plumb, and rigid.

C. Sealants, water-stop, and grouting to be completed by appropriate personnel, and in accordance with product application directions, manufacturer’s instructions, and "Approved for Construction" Drawings.

D. Tolerances: All dimensional requirements must be in accordance with manufacturer's installation instructions and "Approved for Construction" Drawings.

E. Products to be operated and field verified that sealing surfaces maintain contact at the correct sealing points.

F. Inspect gaskets for damage, wear, and adhesion. Replace compromised gaskets immediately.

G. Verify that latching assemblies operate freely and correctly.

H. Verify all anchorage is in accordance with manufacturer's installation instructions and applicable data sheets.

I. Inspect installation sealants to ensure a watertight juncture.

3.4 FIELD QUALITY CONTROL

A. Field Testing:
   1. Installer to perform visual dry test for gasket alignment, continuity contact and pre-compression.
   2. Installer to perform hose test of barrier to frame in accordance with manufacturer’s standard Hose Test Procedure.

3.5 CLEANING

A. Touch-up, repair or replace damaged products or components before Substantial Completion.

B. Clean all sealing surfaces.

3.6 PROTECTION

A. Protect installed products until completion of project.

END OF SECTION

SECTION 08 51 13 – ALUMINUM WINDOWS

PART 1 - GENERAL

1.1 SUMMARY

A. Section Includes:

2. Combination aluminum fixed and lower hopper windows.
3. Fixed aluminum windows.

1.2 DEFINITIONS

A. Performance class and grade designations according to AAMA/WDMA 101/I.S.2/NAFS:

1. AW: Architectural Windows.
2. Minimum Performance Grade: 50, but not less than required to match existing, where indicated.

1.3 PREINSTALLATION MEETINGS

A. Preinstallation Conference: Conduct conference at Project site.

1. Review and finalize construction schedule and verify availability of materials, Installer's personnel, equipment, and facilities needed to make progress and avoid delays.
2. Review and discuss any finishing of aluminum windows that is required to be coordinated with the finishing of other aluminum work for color and finish matching.
3. Review, discuss, and coordinate the interrelationship of aluminum windows with other exterior wall components. Include provisions for anchoring, flashing, weeping, sealing perimeters, and protecting finishes.
4. Review and discuss the sequence of work required to construct a watertight and weathertight exterior building envelope.
5. Inspect and discuss the condition of substrate and other preparatory work performed by other trades.

1.4 SUBMITTALS

A. Product Data: For each type of product.

1. Include construction details, material descriptions, glazing and fabrication methods, dimensions of individual components and profiles, hardware, and finishes for aluminum windows.

B. Shop Drawings: For aluminum windows.

1. In plans, elevations, sections, hardware, accessories, operational clearances, and details of installation, including anchor, flashing, and sealant installation.

C. Samples for Verification: For aluminum windows and components required, prepared on Samples of size indicated below.

1. Main Framing Member: 12-inch long, full-size sections of extrusions with factory-applied color finish.
2. Window Corner Fabrication: 12-by-12-inch long, full-size window corner including full-size sections of extrusions with factory-applied color finish, weather stripping, and glazing.

D. Test Reports: Submit material and product test reports showing compliance with performance and Building Code requirements.

E. Field quality-control reports.

F. Sample Warranties: For manufacturer's warranties.

1.5 QUALITY ASSURANCE

D. Manufacturer Qualifications: A manufacturer capable of fabricating aluminum windows that meet or exceed performance requirements indicated and of documenting this performance by inclusion in lists and by labels, test reports, and calculations.

E. Installer Qualifications: An installer Pre-approved by aluminum window manufacturer for installation of units required for this Project.

F. Testing Agency Qualifications: Qualified according to ASTM E 699 for testing indicated.

G. Fenestration Standard: Comply with AAMA/WDMA 101/I.S.2/NAFS, "North American Fenestration Standard Voluntary Performance Specification for Windows, Skylights and Glass Doors," for definitions and minimum standards of performance, materials, components, accessories, and fabrication. Comply with more stringent requirements if indicated.

1. Provide AAMA-certified aluminum windows with an attached label.

H. Source Limitations: Obtain aluminum windows through one source from a single manufacturer.

I. Glazing Publications: Comply with published recommendations of glass manufacturers and with GANA's "Glazing Manual" unless more stringent requirements are indicated.

J. Mockups: Build mockups to verify selections made under sample submittals and to demonstrate aesthetic effects and set quality standards for materials and execution.

1. Build mockup for types of windows indicated, in locations shown on Drawings.

2. Approval of mockups does not constitute approval of deviations from the Contract Documents contained in mockups unless Engineer specifically approves such deviations in writing.
3. Subject to compliance with requirements, approved mockups may become part of the completed Work if undisturbed at time of Substantial Completion.

1.6 WARRANTY

A. Special Warranty: Manufacturer's standard form in which manufacturer agrees to repair or replace aluminum windows which fail in materials or workmanship within specified warranty period.

1. Failures include, but are not limited to, the following:

a. Failure to meet performance requirements.
b. Structural failures including excessive deflection, water leakage, air infiltration, or condensation.
c. Faulty operation of movable sash and hardware.
d. Deterioration of metals, other materials, and metal finishes beyond normal weathering.
e. Failure of insulating glass.

2. Warranty Period:

a. Window: Three years from date of Substantial Completion.
b. Glazing: 10 years from date of Substantial Completion.
c. Metal Finish: 20 years from date of Substantial Completion.

PART 2 - PRODUCTS

2.1 PERFORMANCE REQUIREMENTS

A. General: Provide aluminum windows capable of complying with performance requirements indicated, based on testing manufacturer's windows that are representative of those specified, and that are of minimum test size indicated below:

1. Size indicated on Drawings or required by AAMA/WDMA/CSA 101/I.S.2/A440, NAFS for performance grade.

B. Wind/Design Loads: As indicated on the Drawings and required by the City of New York Building Code.

C. Window Performance Characteristics: Testing shall demonstrate compliance with requirements indicated in AAMA 101 for air infiltration, water penetration, and structural performance for type, grade, and performance class of window units required. Where required design pressure exceeds the minimum for the specified window grade of 65 (Operable), 100 (Fixed), comply with requirements of AAMA 101, Section 3, "Optional Performance Classes," for higher than minimum performance class.

1. Operable and Fixed Windows:

    a. Air-Infiltration Rate: Not more than 0.10 CFM/ft. of frame area for an inward test pressure of 6.24 lbs/sq. ft. when tested in accordance with ASTM E283.
    b. Water Penetration: No uncontrolled water penetration for a static air pressure difference of 12 lbs/sq. ft.(operable) and 15 lbs/sq.ft. (fixed) when tested in accordance with ASTM E331 and ASTM E547.
    c. Structural Performance: As required by AAMA/WDMA/CSA 101/I.S.2/A440, NAFS for performance Class and Grade indicated.
    d. Condensation Resistance: Provide units that have been tested for thermal performance in accordance with AAMA 1503.1 showing a condensation resistance factor (CRF) of not less than 57 (Fixed) and 53 (Operable).
    e. Thermal Transmittance: With window sash closed and locked, and tested in accordance with AAMA 1503.1, Conductive thermal transmittance (U-value) shall not be more than 0.39 (Fixed), 0.52 (Operable) BTU/hr/sf/deg F.
    f. Acoustical Performance: When tested in accordance with ASTM E 90 and ASTM E 1332, the Sound Transmission Class (STC) shall not be less than 32 (Fixed) and 33 (Operable) units.

D. Deflection: Design glass framing system to limit lateral deflections of glass edges to less than 1/175 of glass-edge length or 3/4 inch, whichever is less, at design pressure based on testing performed according to AAMA/WDMA 101/I.S.2/NAFS, Uniform Load Deflection Test or structural computations.

E. Thermal Movements: Provide aluminum windows, including anchorage, that allow for thermal movements resulting from the following maximum change (range) in ambient and surface temperatures by preventing buckling, opening of joints, overstressing of components, failure of joint sealants, failure of connections, and other detrimental effects. Base engineering calculation on surface temperatures of materials due to both solar heat gain and nighttime-sky heat loss.

    1. Temperature Change (Range): 120 deg F, ambient; 180 deg F material surfaces.

2.2 MANUFACTURERS

A. Basis of Design: Subject to compliance with requirements, provide “Yow 225 TU ThermaBond Plus Operable and Fixed Aluminum Window” as manufactured by YKK America, or approved equal from one of the following:

    1. EFCO.
    2. Kawneer North America; an Alcoa company.
    3. Approved equal.

2.3 MATERIALS

A. Aluminum Extrusions: ASTM B221, Alloy 6063-T5.

B. Fasteners: Nonmagnetic stainless steel, AISI 300 series, or other materials warranted by manufacturer to be noncorrosive and compatible with aluminum window members, trim, hardware, anchors, and other components.

1. Reinforcement: Where fasteners screw anchor into aluminum less than 0.125 inch thick, reinforce interior with aluminum or nonmagnetic stainless steel to receive screw threads, or provide standard, noncorrosive, pressed-in, splined grommet nuts.
2. Exposed Fasteners: Unless unavoidable for applying hardware, do not use exposed fasteners. For application of hardware, use fasteners that match finish of member or hardware being fastened, as appropriate.

C. Anchors, Clips, and Accessories: Aluminum, nonmagnetic stainless steel, or zinc-coated steel or iron complying with ASTM B 633 for SC 3 severe service conditions; provide sufficient strength to withstand design pressure indicated.

D. Reinforcing Members: Aluminum, nonmagnetic stainless steel, or nickel/chrome-plated steel complying with ASTM B 456 for Type SC 3 severe service conditions, or zinc-coated steel or iron complying with ASTM B 633 for SC 3 severe service conditions; provide sufficient strength to withstand design pressure indicated.

E. Sealant: For sealants required within fabricated windows, provide window manufacturer's standard, permanently elastic, nonshrinking, and nonmigrating type recommended by sealant manufacturer for joint size and movement.

3. Provide Non-skinning type, AAMA 803.3.

4. Comply with Section 079200 - “Joint Sealants” for additional requirements.

2.4 HARDWARE

E. Hardware, General: Provide manufacturer's standard hardware fabricated from aluminum, stainless steel, carbon steel complying with AAMA 907, or other corrosion-resistant material compatible with adjacent materials; designed to smoothly operate, tightly close, and securely lock windows, and sized to accommodate sash weight and dimensions.

F. Hopper Window Hardware:

1. Standard concealed stainless steel 4 bar hinges for casement outswing.
2. White bronze cam handles and strikes.

2.5 GLAZING

A. Glass and Glazing Materials: 1 inch insulated glazing. Refer to Section 088000 - "Glazing" issued separately for insulated glass units and glazing requirements applicable to glazed aluminum window units.

B. Glazing Accessories: Provide setting blocks, edge blocks, gaskets and spacers meeting requirements of ASTM C 864, with shore durometer hardness as recommended by manufacturer.

2.6 FABRICATION

A. Fabricate aluminum windows in sizes indicated. Include a complete system for assembling components and anchoring windows.

1. Perimeter frame minimum depth of 2-1/4".
2. Principal window frame and sash ventilator members shall be a minimum 0.125" in thickness, unless otherwise indicated.
3. Extruded or formed trim components shall be minimum 0.060" thick, unless otherwise indicated.

B. Thermal-Break Construction: Fabricate aluminum windows with an integrally concealed, structural thermal barrier, located between exterior materials and exposed interior members to eliminate direct metal-to-metal contact. Use manufacturer's standard construction consisting of a two-part, chemically curing high density polyurethane which is bonded to the aluminum framing.

1. Protection of Metals: Provide protection against galvanic (electrolytic) action wherever dissimilar metals are in contact.

   a. Protect contact surfaces of aluminum which is to be in contact with concrete, mortar or plaster with an approved coating or separator.
   b. Furnish a schedule of protective coatings and separators, including the designations of locations, materials, special instructions and specification data sheets.

C. Weep Holes: Provide weep holes and internal passages to conduct infiltrating water to exterior.

D. Mullions: Provide mullions and cover plates as shown, matching window units, complete with anchors for support to structure and installation of window units. Allow for erection tolerances and provide for movement of window units due to thermal expansion and building deflections, as indicated. Provide mullions and cover plates capable of withstanding design loads of window units.

E. Factory-Glazed Fabrication: Glaze aluminum windows in the factory where practical and possible for applications indicated. Comply with additional requirements of Section 088000 - "Glazing" issued separately and with AAMA/WDMA 101/I.S.2/NAFS.

F. Glazing Stops: Provide snap-on glazing stops coordinated with glazing system indicated. Provide glazing stops to match sash and ventilator frames.

2.7 ALUMINUM FINISHES

A. Comply with NAAMM's "Metal Finishes Manual for Architectural and Metal Products" for recommendations for applying and designating finishes.

1. Finish designations prefixed by AA comply with the system established by the Aluminum Association for designating aluminum finishes.

B. Factory Anodized Finish:

1. Color and Gloss: As selected by the Engineer from manufacturer's full range.

PART 3 - EXECUTION

3.1 EXAMINATION

A. Examine openings, substrates, structural support, anchorage, and conditions, with Installer present, for compliance with requirements for installation tolerances and other conditions affecting performance of work. Verify rough opening dimensions, levelness of sill plate, and operational clearances. Examine wall flashings, vapor retarders, water and weather barriers, and other built-in components to ensure a coordinated, weathertight window installation.

1. Metal Surfaces: Dry; clean; free of grease, oil, dirt, rust, corrosion, and welding slag; without sharp edges or offsets at joints.
2. Proceed with installation only after unsatisfactory conditions have been corrected.

3.2 INSTALLATION

A. Comply with Drawings, Shop Drawings, and manufacturer's written instructions for installing windows, hardware, accessories, and other components.

B. Install windows level, plumb, square, true to line, without distortion or impeding thermal movement, anchored securely in place to structural support, and in proper relation to wall flashing and other adjacent construction.

C. Set sill members in bed of sealant or with gaskets, as indicated, for weathertight construction.

D. Install windows and components to drain condensation, water penetrating joints, and moisture migrating within windows to the exterior.

E. Separate aluminum and other corrodible surfaces from sources of corrosion or electrolytic action at points of contact with other materials.

3.3 FIELD QUALITY CONTROL

A. Testing Agency: Engage a qualified testing agency to perform tests and inspections.

1. Testing and inspecting agency will interpret tests and state in each report whether tested work complies with or deviates from requirements.

B. Testing Services: Testing and inspecting of installed windows shall take place as follows:

1. Testing Methodology: Testing of windows for air infiltration and water resistance shall be performed according to AAMA 502.
2. Air-Infiltration Testing:
   a. Test Pressure: That required to determine compliance with AAMA/WDMA/CSA 101/I.S.2/A440 performance class indicated.
   b. Allowable Air-Leakage Rate: 1.5 times the applicable AAMA/WDMA/CSA 101/I.S.2/A440 rate for product type and performance class rounded down to one decimal place.
3. Water-Resistance Testing:
   a. Test Pressure: Two-thirds times test pressure required to determine compliance with AAMA/WDMA/CSA 101/I.S.2/A440 performance grade indicated.
   b. Allowable Water Infiltration: No water penetration.
4. Testing Extent: Three mockup windows of each type as selected by Engineer and a qualified independent testing and inspecting agency. Windows shall be tested after perimeter sealants have cured.
5. Test Reports: Prepared according to AAMA 502.

C. Remove and replace noncomplying windows and retest as specified above.

D. Additional testing and inspecting, at Contractor's expense, will be performed to determine compliance of replaced or additional work with specified requirements.

E. Prepare test and inspection reports.

END OF SECTION

SECTION 08 71 00 – DOOR HARDWARE

PART 1 - GENERAL

1.1 SUMMARY

A. This Section includes commercial door hardware for the following:

1. Swinging doors.
2. Other doors to the extent indicated.

B. Door hardware includes, but is not necessarily limited to, the following:

1. Mechanical door hardware.
2. Cylinders specified for doors in other sections.

C. Related Sections:

1. Division 08 Section “Door Hardware Schedule”.
2. Division 08 Section “Hollow Metal Doors and Frames”.
3. Division 08 Section “Stainless Steel Doors and Frames”.

D. Codes and References: Comply with the version year adopted by the Authority Having Jurisdiction.

1. ANSI A117.1 - Accessible and Usable Buildings and Facilities.
2. ICC/IBC - International Building Code.
3. NFPA 70 - National Electrical Code.
4. NFPA 80 - Fire Doors and Windows.
5. NFPA 101 - Life Safety Code.
6. NFPA 105 - Installation of Smoke Door Assemblies.
7. State Building Codes, Local Amendments.

E. Standards: All hardware specified herein shall comply with the following industry standards:

1. ANSI/BHMA Certified Product Standards - A156 Series
2. UL10C – Positive Pressure Fire Tests of Door Assemblies

1.2 SUBMITTALS

A. Product Data: Manufacturer's product data sheets including installation details, material descriptions, dimensions of individual components and profiles, operational descriptions and finishes.

B. Door Hardware Schedule: Prepared by or under the supervision of supplier, detailing fabrication and assembly of door hardware, as well as procedures and diagrams. Coordinate the final Door Hardware Schedule with doors, frames, and related work to ensure proper size, thickness, hand, function, and finish of door hardware.

1. Format: Comply with scheduling sequence and vertical format in DHI's "Sequence and Format for the Hardware Schedule."

2. Organization: Organize the Door Hardware Schedule into door hardware sets indicating complete designations of every item required for each door or opening. Organize door hardware sets in same order as in the Door Hardware Sets at the end of Part 3. Submittals that do not follow the same format and order as the Door Hardware Sets will be rejected and subject to resubmission.

3. Content: Include the following information:

   a. Type, style, function, size, label, hand, and finish of each door hardware item.
   b. Manufacturer of each item.
   c. Fastenings and other pertinent information.
   d. Location of door hardware set, cross-referenced to Drawings, both on floor plans and in door and frame schedule.
   e. Explanation of abbreviations, symbols, and codes contained in schedule.
   f. Mounting locations for door hardware.
   g. Door and frame sizes and materials.
   h. Warranty information for each product.

4. Submittal Sequence: Submit the final Door Hardware Schedule at earliest possible date, particularly where approval of the Door Hardware Schedule must precede fabrication of other work that is critical in the Project construction schedule. Include Product Data, Samples, Shop Drawings of other work affected by door hardware, and other information essential to the coordinated review of the Door Hardware Schedule.

C. Keying Schedule: After a keying meeting with the Engineer has taken place prepare a separate keying schedule detailing final instructions. Submit the keying schedule in electronic format. Include keying system explanation, door numbers, key set symbols, hardware set numbers and special instructions. Engineer must approve submitted keying schedule prior to the ordering of permanent cylinders/cores.

D. Informational Submittals:

1. Product Test Reports: Indicating compliance with cycle testing requirements, based on evaluation of comprehensive tests performed by manufacturer and witnessed by a qualified independent testing agency.

E. Operating and Maintenance Manuals: Provide (3) copies manufacturers operating and maintenance manuals for each item comprising the complete door hardware installation

1.3 QUALITY ASSURANCE

A. Manufacturers Qualifications: Engage qualified manufacturers with a minimum 5 years of documented experience in producing hardware and equipment similar to that indicated for this Project and that have a proven record of successful in-service performance.

B. Installer Qualifications: A minimum 3 years documented experience installing both standard and electrified door hardware similar in material, design, and extent to that indicated for this Project and whose work has resulted in construction with a record of successful in-service performance.

C. Door Hardware Supplier Qualifications: Experienced commercial door hardware distributors with a minimum 5 years documented experience supplying both mechanical and electromechanical hardware installations comparable in material, design, and extent to that indicated for this Project. Supplier recognized as a factory direct distributor by the manufacturers of the primary materials with a warehousing facility in Project's vicinity. Supplier to have on staff a certified Architectural Hardware Consultant (AHC) available during the course of the Work to consult with the Engineer concerning both standard and electromechanical door hardware and keying.

D. Source Limitations: Obtain each type and variety of door hardware specified in this section from a single source unless otherwise indicated.

1. Electrified modifications or enhancements made to a source manufacturer's product line by a secondary or third party source will not be accepted.

E. Each unit to bear third party permanent label demonstrating compliance with the referenced standards.

F. Keying Conference: Keying conference to incorporate the following criteria into the final keying schedule document:

1. Function of building, purpose of each area and degree of security required.
2. Plans for existing and future key system expansion.
3. Requirements for key control storage and software.
4. Installation of permanent keys, cylinder cores and software.
5. Address and requirements for delivery of keys.

G. Pre-Submittal Conference: Conduct coordination conference with attendance by representatives of Supplier(s), Installer(s), and Contractor(s) to review proper methods and the procedures for receiving, handling, and installing door hardware.

1. Prior to installation of door hardware, conduct a project specific training meeting to instruct the installing contractors' personnel on the proper installation and adjustment of their respective products. Product training to be attended by installers of door hardware (including electromechanical hardware) for aluminum, hollow metal and wood doors. Training will include the use of installation manuals, hardware schedules, templates and physical product samples as required.
2. Inspect and discuss electrical roughing-in, power supply connections, and other preparatory work performed by other trades.
3. Review sequence of operation narratives for each unique access controlled opening.
4. Review and finalize construction schedule and verify availability of materials.
5. Review the required inspecting, testing, commissioning, and demonstration procedures

H. At completion of installation, provide written documentation that components were applied to manufacturer's instructions and recommendations and according to approved schedule.

1.4 DELIVERY, STORAGE, AND HANDLING

A. Inventory door hardware on receipt and provide secure lock-up and shelving for door hardware delivered to Project site. Do not store electronic access control hardware, software or accessories at Project site without prior authorization.

B. Tag each item or package separately with identification related to the final Door Hardware Schedule, and include basic installation instructions with each item or package.

C. Deliver, as applicable, permanent keys, cylinders, cores, access control credentials, software and related accessories directly to Engineer via registered mail or overnight package service. Instructions for delivery to the Engineer shall be established at the "Keying Conference".

1.5 COORDINATION

A. Templates: Obtain and distribute to the parties involved templates for doors, frames, and other work specified to be factory prepared for installing standard and electrified hardware. Check Shop Drawings of other work to confirm that adequate provisions are made for locating and installing hardware to comply with indicated requirements.

B. Door and Frame Preparation: Doors and corresponding frames are to be prepared, reinforced and pre-wired (if applicable) to receive the installation of the specified electrified, monitoring, signaling and access control system hardware without additional in-field modifications.

1.6 WARRANTY

A. Warranty Period: Written warranty, executed by manufacturer(s), agreeing to repair or replace components of standard and electrified door hardware that fails in materials or workmanship within specified warranty period after final acceptance by the Engineer. Failures include, but are not limited to, the following:

1. Structural failures including excessive deflection, cracking, or breakage.
2. Faulty operation of the hardware.
3. Deterioration of metals, metal finishes, and other materials beyond normal weathering.
4. Electrical component defects and failures within the systems operation.

B. Standard Warranty Period: One year from date of Substantial Completion, unless otherwise indicated.

C. Special Warranty Periods:

1. Five years from Substantial Completion for exit hardware.
2. Twenty five years from Substantial Completion for manual surface door closer bodies.

1.7 MAINTENANCE SERVICE

A. Maintenance Tools and Instructions: Furnish a complete set of specialized tools and maintenance instructions as needed for Engineer 's continued adjustment, maintenance, and removal and replacement of door hardware.

PART 2 - PRODUCTS

2.1 SCHEDULED DOOR HARDWARE

A. General: Provide door hardware for each door to comply with requirements in Door Hardware Sets and each referenced section that products are to be supplied under.

B. Designations: Requirements for quantity, item, size, finish or color, grade, function, and other distinctive qualities of each type of door hardware are indicated in the Door Hardware Sets at the end of Part 3. Products are identified by using door hardware designations, as follows:

1. Named Manufacturer's Products: Product designation and manufacturer are listed for each door hardware type required for the purpose of establishing requirements. Manufacturers' names are abbreviated in the Door Hardware Schedule.

C. Substitutions: Requests for substitution and product approval for inclusive mechanical and electromechanical door hardware in compliance with the specifications must be submitted in. Approval of requests is at the discretion of the Engineer and their designated consultants.

2.2 HANGING DEVICES

A. Hinges: ANSI/BHMA A156.1 certified butt hinges with number of hinge knuckles and other options as specified in the Door Hardware Sets.
1. Quantity: Provide the following hinge quantity:

a. Two Hinges: For doors with heights up to 60 inches.
b. For doors with heights more than 60 inches, provide 1 hinge for every 30 inches of door height greater than 60 inches.
2. Hinge Size: Provide the following, unless otherwise indicated, with hinge widths sized for door thickness and clearances required:

a. Widths up to 3’0”: 4-1/2” standard weight.
b. Sizes over 3’0” or high frequency: 5” heavy weight.
3. Hinge Base Material: Unless otherwise indicated, provide the following:

a. Exterior Doors: Heavy weight, non-ferrous, ball bearing or oil impregnated bearing hinges unless Hardware Sets indicate standard weight.
b. Interior Doors: steel, ball bearing or oil impregnated bearing hinges unless Hardware Sets indicate non-ferrous.

4. Hinge Options: Comply with the following:

a. Non-removable Pins: Provide set screw in hinge barrel that, when tightened into a groove in hinge pin, prevents removal of pin while door is closed; for the all out-swinging lockable doors.

5. Manufacturers:

a. McKinney Products; ASSA ABLOY Architectural Door Accessories (MK) - TA Series.
b. Or approved equal

B. Continuous Geared Hinges: ANSI/BHMA A156.26 Grade 1-600 certified continuous geared hinge. with minimum 0.120-inch thick extruded 6060 T6 aluminum alloy hinge leaves and a minimum overall width of 4 inches. Hinges are non-handed, reversible and fabricated to template screw locations. Factory trim hinges to suit door height and prepare for electrical cut-outs.

1. Manufacturers:

a. Pemko Products; ASSA ABLOY Architectural Door Accessories (PE).
b. Or approved equal

2.3 CYLINDERS AND KEYING

A. General: Cylinder manufacturer to have minimum (10) years experience designing secured master key systems and have on record a published security keying system policy.

B. Source Limitations: Obtain each type of keyed cylinder and keys from the same source manufacturer as locksets and exit devices, unless otherwise indicated.

C. Cylinders: Original manufacturer cylinders complying with the following:

1. Mortise Type: Threaded cylinders with rings and cams to suit hardware application.
2. Rim Type: Cylinders with back plate, flat-type vertical or horizontal tailpiece, and raised trim ring.
3. Bored-Lock Type: Cylinders with tailpieces to suit locks.
4. Mortise and rim cylinder collars to be solid and recessed to allow the cylinder face to be flush and be free spinning with matching finishes.
5. Keyway: Manufacturer’s Standard.

D. Permanent Cores: Manufacturer's standard; finish face to match lockset; complying with the following:

1. Removable Cores: Core insert, removable by use of a special key, and for use with only the core manufacturer's cylinder and door hardware. Provide removable core (small or large format) as specified in Hardware Sets.

E. Patented Cylinders: ANSI/BHMA A156.5, Grade 1, certified cylinders employing a utility patented and restricted keyway requiring the use of patented controlled keys. Provide bump resistant, fixed core cylinders as standard with solid recessed cylinder collars. Cylinders are to be factory keyed where permanent keying records will be established and maintained.

1. Provide a 6 pin multi-level master key system comprised of patented controlled keys and security and high security cylinders operated by one (1) key of the highest level. Geographical exclusivity to be provided for all security and high security cylinders and UL437 certification where specified.

    a. Level 1 Cylinders: Provide utility patented controlled keyway cylinders that are furnished with patented keys available only from authorized distribution.
    b. Level 2 Cylinders: Provide utility patented controlled keyway and side bar locking incorporating unique angled bottom pins for geographical exclusivity. Cylinders constructed to provide protection against bumping and picking.
    c. Level 3 Cylinders: Provide utility patented controlled keyway and side bar locking incorporating unique angled bottom pins for geographical exclusivity. Cylinders to be UL437 certified and constructed to provide protection against bumping, picking, and drilling.
    d. Refer to hardware sets for specified levels.

2. Manufacturers:

    a. Sargent Manufacturing (SA) - Degree Series.
    b. Corbin Russwin (RU) – Access 3 Series.
    c. Or approved equal

F. Keying System: Each type of lock and cylinders to be factory keyed.

1. Conduct specified "Keying Conference" to define and document keying system instructions and requirements.
2. Furnish factory cut, nickel-silver large bow permanently inscribed with a visual key control number as directed by Engineer.
3. New System: Key locks to a new key system as directed by the Engineer.

G. Key Quantity: Provide the following minimum number of keys:

1. Change Keys per Cylinder: Three (3).
2. Master Keys (per Master Key Level/Group): Five (5).
3. Construction Keys (where required): Ten (10).
4. Construction Control Keys (where required): Two (2).
5. Permanent Control Keys (where required): Two (2).

H. Construction Keying: Provide temporary keyed construction cores.

I. Key Registration List (Bitting List):

1. Provide keying transcript list to Engineer in the proper format for importing into key control software.

2. Provide transcript list in writing or electronic file as directed by the Engineer.

J. Key Control Cabinet: Provide a key control system including envelopes, labels, and tags with self-locking key clips, receipt forms, 3-way visible card index, temporary markers, permanent markers, and standard metal cabinet. Key control cabinet shall have expansion capacity of 150% of the number of locks required for the project.

1. Manufacturers:

a. Lund Equipment (LU).
b. MMF Industries (MM).
c. Telkee (TK).
d. Or approved equal

K. Key Control Software: Provide one network version of "Key Wizard" branded key management software package that includes one year of technical support and upgrades to software at no charge. Provide factory key system formatted for importing into “Key Wizard” software.

2.4 MECHANICAL LOCKS AND LATCHING DEVICES

Not Used

2.5 CONVENTIONAL EXIT DEVICES

A. General Requirements: All exit devices specified herein shall meet or exceed the following criteria:

1. At doors not requiring a fire rating, provide devices complying with NFPA 101 and listed and labeled for "Panic Hardware" according to UL305. Provide proper fasteners as required by manufacturer including sex nuts and bolts at openings specified in the Hardware Sets.

2. Where exit devices are required on fire rated doors, provide devices complying with NFPA 80 and with UL labeling indicating "Fire Exit Hardware". Provide devices with the proper fasteners for installation as tested and listed by UL. Consult manufacturer’s catalog and template book for specific requirements.

3. Except on fire rated doors, provide exit devices with hex key dogging device to hold the pushbar and latch in a retracted position. Provide optional keyed cylinder dogging on devices where specified in Hardware Sets.

4. Devices must fit flat against the door face with no gap that permits unauthorized dogging of the push bar. The addition of filler strips is required in any case where the door light extends behind the device as in a full glass configuration.

5. Energy Efficient Design: Provide lock bodies which have a holding current draw of 15mA maximum, and can operate on either 12 or 24 volts. Locks are to be field configurable for fail safe or fail secure operation.

6. Lever Operating Trim: Where exit devices require lever trim, furnish manufacturer's heavy duty escutcheon trim with threaded studs for thru-bolts.

    a. Lock Trim Design: As indicated in Hardware Sets, provide finishes and designs to match that of the specified locksets.
    b. Where function of exit device requires a cylinder, provide a cylinder (Rim or Mortise) as specified in Hardware Sets.

7. Vertical Rod Exit Devices: Where surface or concealed vertical rod exit devices are used at interior openings, provide as less bottom rod (LBR) unless otherwise indicated. Provide dust proof strikes where thermal pins are required to project into the floor.

8. Narrow Stile Applications: At doors constructed with narrow stiles, or as specified in Hardware Sets, provide devices designed for maximum 2” wide stiles.

9. Dummy Push Bar: Nonfunctioning push bar matching functional push bar.

10. Rail Sizing: Provide exit device rails factory sized for proper door width application.

11. Through Bolt Installation: For exit devices and trim as indicated in Door Hardware Sets.

B. Conventional Push Rail Exit Devices (Heavy Duty): ANSI/BHMA A156.3, Grade 1 certified panic and fire exit hardware devices furnished in the functions specified in the Hardware Sets. Exit device latch to be stainless steel, pullman type, with deadlock feature.

1. Manufacturers:

    a. Corbin Russwin Hardware (RU) - ED4000 / ED5000 Series.
    b. Sargent Manufacturing (SA) - 80 Series.
    c. Or approved equal

2.6 DOOR CLOSERS

A. All door closers specified herein shall meet or exceed the following criteria:

1. General: Door closers to be from one manufacturer, matching in design and style, with the same type door preparations and templates regardless of application or spring size. Closers to be non-handed with full sized covers including installation and adjusting information on inside of cover.

2. Standards: Closers to comply with UL-10C for Positive Pressure Fire Test and be U.L. listed for use of fire rated doors.

3. Cycle Testing: Provide closers which have surpassed 15 million cycles in a test witnessed and verified by UL.

4. Size of Units: Comply with manufacturer's written recommendations for sizing of door closers depending on size of door, exposure to weather, and anticipated frequency of use. Where closers are indicated for doors required to be accessible to the physically handicapped, provide units complying with ANSI ICC/A117.1.

5. Closer Arms: Provide heavy duty, forged steel closer arms unless otherwise indicated in Hardware Sets.

6. Closers shall not be installed on exterior or corridor side of doors; where possible install closers on door for optimum aesthetics.

7. Closer Accessories: Provide door closer accessories including custom templates, special mounting brackets, spacers and drop plates as required for proper installation. Provide through-bolt and security type fasteners as specified in the hardware sets.

B. Door Closers, Surface Mounted (Unitrol): Unitrol arms to have door stop mechanism to absorb dead stop shock on arm and top hinge. Hold-open arms to have a spring loaded mechanism in addition to shock absorber assembly. Arms to be provided with rigid steel main arm and secondary arm lengths proportional to the door width.

1. Manufacturers:

a. Corbin Russwin Hardware (RU) - Unitrol Series.
b. Norton Door Controls (NO) - Unitrol Series.
c. Or approved equal

2.7 DOOR STOPS AND HOLDERS

A. General: Door stops and holders to be of type and design as specified below or in the Hardware Sets.

B. Door Stops and Bumpers: ANSI/BHMA A156.16, Grade 1 certified door stops and wall bumpers. Provide wall bumpers, either convex or concave types with anchorage as indicated, unless floor or other types of door stops are specified in Hardware Sets. Do not mount floor stops where they will impede traffic. Where floor or wall bumpers are not appropriate, provide overhead type stops and holders.

1. Manufacturers:

a. Rockwood Products; ASSA ABLOY Architectural Door Accessories (RO).
b. Or approved equal

2.8 ARCHITECTURAL SEALS

A. General: Thresholds, weatherstripping, and gasket seals to be of type and design as specified below or in the Hardware Sets. Provide continuous weatherstrip gasketing on exterior doors and provide smoke, light, or sound gasketing on interior doors where

indicated. At exterior applications provide non-corrosive fasteners and elsewhere where indicated.

B. Smoke Labeled Gasketing: Assemblies complying with NFPA 105 that are listed and labeled by a testing and inspecting agency acceptable to authorities having jurisdiction, for smoke control ratings indicated, based on testing according to UL 1784.

1. Provide smoke labeled perimeter gasketing at all smoke labeled openings.

C. Fire Labeled Gasketing: Assemblies complying with NFPA 80 that are listed and labeled by a testing and inspecting agency acceptable to authorities having jurisdiction, for fire ratings indicated, based on testing according to UL-10C.

1. Provide intumescent seals as indicated to meet UL10C Standard for Positive Pressure Fire Tests of Door Assemblies, and NPFA 252, Standard Methods of Fire Tests of Door Assemblies.

D. Sound-Rated Gasketing: Assemblies that are listed and labeled by a testing and inspecting agency, for sound ratings indicated.

E. Replaceable Seal Strips: Provide only those units where resilient or flexible seal strips are easily replaceable and readily available from stocks maintained by manufacturer.

F. Manufacturers:

1. Pemko Products; ASSA ABLOY Architectural Door Accessories (PE).
2. Or approved equal

2.9 FABRICATION

A. Fasteners: Provide door hardware manufactured to comply with published templates generally prepared for machine, wood, and sheet metal screws. Provide screws according to manufacturers recognized installation standards for application intended.

2.10 FINISHES

A. Standard: Designations used in the Hardware Sets and elsewhere indicate hardware finishes complying with ANSI/BHMA A156.18, including coordination with traditional U.S. finishes indicated by certain manufacturers for their products.

B. Provide quality of finish, including thickness of plating or coating (if any), composition, hardness, and other qualities complying with manufacturer's standards, but in no case less than specified by referenced standards for the applicable units of hardware

C. Protect mechanical finishes on exposed surfaces from damage by applying a strippable, temporary protective covering before shipping.

PART 3 - EXECUTION

3.1 EXAMINATION

A. Examine scheduled openings, with Installer present, for compliance with requirements for installation tolerances, labeled fire door assembly construction, wall and floor construction, and other conditions affecting performance.

B. Notify the Engineer of any discrepancies or conflicts between the door schedule, door types, drawings and scheduled hardware. Proceed only after such discrepancies or conflicts have been resolved in writing.

3.2 PREPARATION

A. Hollow Metal Doors and Frames: Comply with ANSI/DHI A115 series.

B. Wood Doors: Comply with ANSI/DHI A115-W series.

3.3 INSTALLATION

A. Install each item of mechanical and electromechanical hardware and access control equipment to comply with manufacturer's written instructions and according to specifications.

1. Installers are to be trained and certified by the manufacturer on the proper installation and adjustment of fire, life safety, and security products including: hanging devices; locking devices; closing devices; and seals.

B. Mounting Heights: Mount door hardware units at heights indicated in following applicable publications, unless specifically indicated or required to comply with governing regulations:

1. Standard Steel Doors and Frames: DHI's "Recommended Locations for Architectural Hardware for Standard Steel Doors and Frames."
2. Wood Doors: DHI WDHS.3, "Recommended Locations for Architectural Hardware for Wood Flush Doors."
3. Where indicated to comply with accessibility requirements, comply with ANSI A117.1 "Accessibility Guidelines for Buildings and Facilities."
4. Provide blocking in drywall partitions where wall stops or other wall mounted hardware is located.

C. Retrofitting: Install door hardware to comply with manufacturer's published templates and written instructions. Where cutting and fitting are required to install door hardware onto or into surfaces that are later to be painted or finished in another way, coordinate removal, storage, and reinstallation of surface protective trim units with finishing work specified in Division 9 Sections. Do not install surface-mounted items until finishes have been completed on substrates involved.

D. Thresholds: Set thresholds for exterior and acoustical doors in full bed of sealant complying with requirements specified in Division 7 Section "Joint Sealants."

E. Storage: Provide a secure lock up for hardware delivered to the project but not yet installed. Control the handling and installation of hardware items so that the completion of the work will not be delayed by hardware losses before and after installation.

3.4 FIELD QUALITY CONTROL

A. Field Inspection: Supplier will perform a final inspection of installed door hardware and state in report whether work complies with or deviates from requirements, including whether door hardware is properly installed, operating and adjusted.

3.5 ADJUSTING

A. Initial Adjustment: Adjust and check each operating item of door hardware and each door to ensure proper operation or function of every unit. Replace units that cannot be adjusted to operate as intended. Adjust door control devices to compensate for final operation of heating and ventilating equipment and to comply with referenced accessibility requirements.

3.6 CLEANING AND PROTECTION

A. Protect all hardware stored on construction site in a covered and dry place. Protect exposed hardware installed on doors during the construction phase. Install any and all hardware at the latest possible time frame.

B. Clean adjacent surfaces soiled by door hardware installation.

C. Clean operating items as necessary to restore proper finish. Provide final protection and maintain conditions that ensure door hardware is without damage or deterioration at time of substantial completion.

3.7 DEMONSTRATION

A. Instruct City maintenance personnel to adjust, operate, and maintain mechanical and electromechanical door hardware.

3.8 DOOR HARDWARE SETS

A. The hardware sets represent the design intent and direction of the Engineer. They are a guideline only and should not be considered a detailed hardware schedule. Discrepancies, conflicting hardware and missing items should be brought to the attention of the Engineer with corrections made prior to the bidding process. Omitted items not included in a hardware set should be scheduled with the appropriate additional hardware required for proper application and functionality.

B. The supplier is responsible for handing and sizing all products and providing the correct option for the appropriate door type and material where more than one is presented in the hardware sets. Quantities listed are for each pair of doors, or for each single door.

C. Refer to Section 080671, Door Hardware Sets, for hardware sets.

END OF SECTION

SECTION 08 80 00 – GLAZING

PART 1 - GENERAL

1.1 SUMMARY

A. Section includes:

1. Glass for windows.
2. Glazing sealants and accessories.

1.2 DEFINITIONS

A. Glass Manufacturers: Firms that produce primary glass, fabricated glass, or both, as defined in referenced glazing publications.

B. Glass Thicknesses: Indicated by thickness designations in millimeters according to ASTM C 1036.

C. IBC: International Building Code.

D. Interspace: Space between lites of an insulating-glass unit.

1.3 COORDINATION

A. Coordinate glazing channel dimensions to provide necessary bite on glass, minimum edge and face clearances, and adequate sealant thicknesses, with reasonable tolerances.

1.4 PREINSTALLATION MEETINGS

A. Preinstallation Conference: Conduct conference at Project Site.

1. Review and finalize construction schedule and verify availability of materials, Installer's personnel, equipment, and facilities needed to make progress and avoid delays.
2. Review temporary protection requirements for glazing during and after installation.

1.5 ACTION SUBMITTALS

A. Product Data: For each type of product.

B. Glass Samples: For each type of following products; 12 inches square.

1. Insulating glass.

C. Glazing Accessory Samples: For sealants, provide a 12 inch-long sample.

D. Calculations, General: For glass indicated to comply with performance requirements and design criteria, including analysis data signed and sealed by the qualified professional engineer responsible for their preparation.

E. Calculations: Submit for Engineer's Information:

1. Glass manufacturer's substantiating calculation or data showing that the probability of breakage at the design wind pressure will not exceed the specified probability of breakage for each type, size and thickness of exterior glass.
2. Thermal stress calculations for each type, size and thickness of exterior glass.

1.6 INFORMATIONAL SUBMITTALS

A. Qualification Data: For Installer, glass testing agency sealant testing agency.

B. Product Certificates: For glass.

C. Product Test Reports: For insulating glass and glazing sealants, for tests performed by a qualified testing agency.

1. For glazing sealants, provide test reports based on testing current sealant formulations within previous 36-month period.

D. Preconstruction adhesion and compatibility test report.

E. Sample Warranties: For special warranties.

1.7 QUALITY ASSURANCE

A. Manufacturer Qualifications for Insulating-Glass Units with Sputter-Coated, Low-E Coatings: A qualified insulating-glass manufacturer who is approved and certified by coated-glass manufacturer.

B. Installer Qualifications: A qualified installer who employs glass installers for this Project who are certified under the National Glass Association's Certified Glass Installer Program.

C. Glass Testing Agency Qualifications: A qualified independent testing agency accredited according to the NFRC CAP 1 Certification Agency Program.

D. Sealant Testing Agency Qualifications: An independent testing agency qualified according to ASTM C 1021 to conduct the testing indicated.

E. Mockups: Build mockups to demonstrate aesthetic effects and to set quality standards for materials and execution.

1. Install glazing in mockups specified in 085113 "Aluminum Windows to match glazing systems required for Project, including glazing methods.
2. Subject to compliance with requirements, approved mockups may become part of the completed Work if undisturbed at time of Substantial Completion.

1.8 PRECONSTRUCTION TESTING

A. Preconstruction Adhesion and Compatibility Testing: Test each glass product, tape sealant, gasket, glazing accessory, and glass-framing member for adhesion to and compatibility with elastomeric glazing sealants.

1. Testing is not required if data are submitted based on previous testing of current sealant products and glazing materials matching those submitted.
2. Use ASTM C 1087 to determine whether priming and other specific joint-preparation techniques are required to obtain rapid, optimum adhesion of glazing sealants to glass, tape sealants, gaskets, and glazing channel substrates.
3. Test no fewer than four Samples of each type of material, including joint substrates, shims, sealant backings, secondary seals, and miscellaneous materials.
4. Schedule enough time for testing and analyzing results to prevent delaying the Work.
5. For materials failing tests, submit sealant manufacturer's written instructions for corrective measures including the use of specially formulated primers.

1.9 DELIVERY, STORAGE, AND HANDLING

A. Protect glazing materials according to manufacturer's written instructions. Prevent damage to glass and glazing materials from condensation, temperature changes, direct exposure to sun, or other causes.

1.10 FIELD CONDITIONS

A. Environmental Limitations: Do not proceed with glazing when ambient and substrate temperature conditions are outside limits permitted by glazing material manufacturers and when glazing channel substrates are wet from rain, frost, condensation, or other causes.

1. Do not install glazing sealants when ambient and substrate temperature conditions are outside limits permitted by sealant manufacturer or are below 40 deg F.

1.11 WARRANTY

A. Manufacturer's Special Warranty for Coated-Glass Products: Manufacturer agrees to replace coated-glass units that deteriorate within specified warranty period. Deterioration of coated glass is defined as defects developed from normal use that are not attributed to glass breakage or to maintaining and cleaning coated glass contrary to manufacturer's written instructions. Defects include peeling, cracking, and other indications of deterioration in coating.

1. Warranty Period: 10 years from date of Substantial Completion.

B. Manufacturer's Special Warranty for Insulating Glass: Manufacturer agrees to replace insulating-glass units that deteriorate within specified warranty period. Deterioration of insulating glass is defined as failure of hermetic seal under normal use that is not attributed to glass breakage or to maintaining and cleaning insulating glass contrary to manufacturer's written instructions. Evidence of failure is the obstruction of vision by dust, moisture, or film on interior surfaces of glass.

1. Warranty Period: 10 years from date of Substantial Completion.

PART 2 - PRODUCTS

2.1 MANUFACTURERS

A. Manufacturers: Subject to compliance with requirements, available manufacturers offering products that may be incorporated into the Work include, but are not limited to the following:

1. Pilkington North America.
2. Schott North America, Inc.
3. Vitro.
4. Approved equal.

B. Source Limitations for Glass: Obtain from single source from single manufacturer for each glass type.

1. Obtain reflective-coated glass from single source from single manufacturer.

C. Source Limitations for Glazing Accessories: Obtain from single source from single manufacturer for each product and installation method.

2.2 PERFORMANCE REQUIREMENTS

A. General: Installed glazing systems shall withstand normal thermal movement and wind and impact loads (where applicable) without failure, including loss or glass breakage attributable to the following: defective manufacture, fabrication, or installation; failure of sealants or gaskets to remain watertight and airtight; deterioration of glazing materials; or other defects in construction.

B. Structural Performance: Glazing shall withstand the following design loads within limits and under conditions indicated determined according to the IBC and ASTM E 1300.

1. Design Wind Pressures: Determine design wind pressures applicable to Project according to ASCE/SEI 7, based on heights above grade indicated on Drawings.

   a. Wind Design Data: As indicated on the Structural Drawings.

2. Maximum Lateral Deflection: For glass supported on all four edges, limit center-of-glass deflection at design wind pressure to not more than 1/50 times the short-side length or 1 inch, whichever is less.

C. Safety Glazing: Where safety glazing is indicated, provide glazing that complies with 16 CFR 1201, Category II.

D. Thermal and Optical Performance Properties: Provide glass with performance properties specified, as indicated in manufacturer's published test data, based on procedures indicated below:

1. For insulating-glass units, properties are based on units of thickness indicated for overall unit and for each lite.
2. U-Factors: Center-of-glazing values, according to NFRC 100 and based on LBL's WINDOW 5.2 computer program, expressed as Btu/sq. ft. x h x deg F.
3. Visible Reflectance: Center-of-glazing values, according to NFRC 300.

2.3 GLASS PRODUCTS, GENERAL

A. Glazing Publications: Comply with published recommendations of glass product manufacturers and organizations below unless more stringent requirements are indicated. See these publications for glazing terms not otherwise defined in this Section or in referenced standards.

1. IGMA Publication for Insulating Glass: SIGMA TM-3000, "North American Glazing Guidelines for Sealed Insulating Glass Units for Commercial and Residential Use."

B. Safety Glazing Labeling: Where safety glazing is indicated, permanently mark glazing with certification label of the SGCC or another certification agency acceptable to authorities having jurisdiction or manufacturer. Label shall indicate manufacturer's name, type of glass, thickness, and safety glazing standard with which glass complies.

C. Insulating-Glass Certification Program: Permanently marked either on spacers or on at least one component lite of units with appropriate certification label of IGCC.

D. Thickness: Where glass thickness is indicated, it is a minimum. Provide glass that complies with performance requirements and is not less than the thickness indicated.

E. Strength: Where annealed float glass is indicated, provide annealed float glass, heat-strengthened float glass, or fully tempered float glass as needed to comply with "Performance Requirements" Article. Where heat-strengthened float glass is indicated, provide heat-strengthened float glass or fully tempered float glass as needed to comply with "Performance Requirements" Article. Where fully tempered float glass is indicated, provide fully tempered float glass.

2.4 GLASS PRODUCTS

A. Ultraclear Float Glass: ASTM C 1036, Type I, Quality-Q3, Class I, complying with other requirements specified and with visible light transmission not less than 91 percent and solar heat gain coefficient not less than 0.87.

1. Basis of Design Product: Subject to compliance with requirements, provide “Starphire” ultra clear, low E glass as manufactured by Vitro, or an Engineer approved equal by one of the following:

   a. AFG Industries, Inc.
   b. Guardian Industries Corp.
   c. Pilkington North America.
   d. Approved equal.

2.5 INSULATING GLASS

A. Insulating-Glass Units: Factory-assembled units consisting of sealed lites of glass separated by a dehydrated interspace, qualified according to ASTM E 2190.

1. Basis of Design Product: Subject to compliance with requirements, provide “Solarban R100” as manufactured by Vitro, or an Engineer approved equal by one of the following:

   a. AFG Industries, Inc.
   b. Guardian Industries Corp.
   c. Pilkington North America.
   d. Approved equal.

      1) Visible Light Transmittance (VLT): 42%
      2) Exterior Reflectance: 32%
      3) Shading Coefficient (SC): 0.27.
      4) Solar Heat Gain Coefficient (SHGC): 0.23.
      5) U-Value: 0.29 (Winter); 0.27 (Summer).
      6) Light to Solar Gain (LSG): 1.83

2. Low-E Coated Glass Products: Clear monolithic glass with a high performance low-emissivity (low-E) coating for use in an insulating unit:

   a. Low-E coating(s) shall be neutral in transmitted and otherwise exhibit the visual and performance characteristics of the products specified herein.

b. Visual quality control acceptance criteria of the coating shall be consistent with industry guidelines, subject to approval by the Contractor.
c. Provide edge deletion on low-e coatings.

3. Sealing System: Dual seal, with manufacturer's standard primary and secondary sealants.
4. Perimeter Spacer: Manufacturer's standard spacer material and construction.
5. Desiccant: Molecular sieve or silica gel, or a blend of both.

2.6 GLAZING SEALANTS

A. General:

1. Compatibility: Compatible with one another and with other materials they contact, including glass products, seals of insulating-glass units, and glazing channel substrates, under conditions of service and application, as demonstrated by sealant manufacturer based on testing and field experience.
2. Suitability: Comply with sealant and glass manufacturers' written instructions for selecting glazing sealants suitable for applications indicated and for conditions existing at time of installation.
3. Colors of Exposed Glazing Sealants: As selected by the Engineer from manufacturer's full range.

B. Glazing Sealant: Neutral-curing silicone glazing sealant complying with ASTM C 920, Type S, Grade NS, Class 100/50, and Use NT.

1. Products: Subject to compliance with requirements, available products that may be incorporated into the Work include, but are not limited to, the following:

a. Dow Corning Corporation; 790.
b. GE Advanced Materials - Silicones; SilPruf LM SCS2700.
c. Sika Corporation U.S.; Sikasil WS-290.
d. Approved equal.

2.7 GLAZING TAPES

A. Back-Bedding Mastic Glazing Tapes: Preformed, butyl-based, 100 percent solids elastomeric tape; nonstaining and nonmigrating in contact with nonporous surfaces; with or without spacer rod as recommended in writing by tape and glass manufacturers for application indicated; and complying with ASTM C 1281 and AAMA 800 for products indicated below:

1. AAMA 804.3 tape, where indicated.
2. AAMA 806.3 tape, for glazing applications in which tape is subject to continuous pressure.
3. AAMA 807.3 tape, for glazing applications in which tape is not subject to continuous pressure.

B. Expanded Cellular Glazing Tapes: Closed-cell, PVC foam tapes; factory coated with adhesive on both surfaces; and complying with AAMA 800 for the following types:

1. AAMA 810.1, Type 1, for glazing applications in which tape acts as the primary sealant.
2. AAMA 810.1, Type 2, for glazing applications in which tape is used in combination with a full bead of liquid sealant.

2.8 MISCELLANEOUS GLAZING MATERIALS

A. General: Provide products of material, size, and shape complying with referenced glazing standard, with requirements of manufacturers of glass and other glazing materials for application indicated, and with a proven record of compatibility with surfaces contacted in installation.

B. Cleaners, Primers, and Sealers: Types recommended by sealant or gasket manufacturer.

C. Setting Blocks: Elastomeric material with a Shore, Type A durometer hardness of 85, plus or minus 5.

D. Spacers: Elastomeric blocks or continuous extrusions of hardness required by glass manufacturer to maintain glass lites in place for installation indicated.

E. Edge Blocks: Elastomeric material of hardness needed to limit glass lateral movement (side walking).

F. Cylindrical Glazing Sealant Backing: ASTM C 1330, Type O (open-cell material), of size and density to control glazing sealant depth and otherwise produce optimum glazing sealant performance.

2.9 FABRICATION OF GLAZING UNITS

A. Fabricate glazing units in sizes required to fit openings indicated for Project, with edge and face clearances, edge and surface conditions, and bite complying with written instructions of product manufacturer and referenced glazing publications, to comply with system performance requirements.

1. Allow for thermal movements from ambient and surface temperature changes acting on glass framing members and glazing components.

    a. Temperature Change: 120 deg F, ambient; 180 deg F.

PART 3 - EXECUTION

3.1 EXAMINATION

A. Examine framing, glazing channels, and stops, with Installer present, for compliance with the following:

1. Manufacturing and installation tolerances, including those for size, squareness, and offsets at corners.
2. Presence and functioning of weep systems.
3. Minimum required face and edge clearances.
4. Effective sealing between joints of glass-framing members.

B. Proceed with installation only after unsatisfactory conditions have been corrected.

3.2 PREPARATION

A. Clean glazing channels and other framing members receiving glass immediately before glazing. Remove coatings not firmly bonded to substrates.

B. Examine glazing units to locate exterior and interior surfaces. Label or mark units as needed so that exterior and interior surfaces are readily identifiable. Do not use materials that leave visible marks in the completed Work.

3.3 GLAZING, GENERAL

A. Comply with combined written instructions of manufacturers of glass, sealants, gaskets, and other glazing materials, unless more stringent requirements are indicated, including those in referenced glazing publications.

B. Protect glass edges from damage during handling and installation. Remove damaged glass from Project site and legally dispose of off Project site. Damaged glass includes glass with edge damage or other imperfections that, when installed, could weaken glass, impair performance, or impair appearance.

C. Apply primers to all joint surfaces for adhesion of sealants, as determined by preconstruction testing.

D. Install setting blocks in sill rabbets, sized and located to comply with referenced glazing publications, unless otherwise required by glass manufacturer. Set blocks in thin course of compatible sealant suitable for heel bead.

E. Do not exceed edge pressures stipulated by glass manufacturers for installing glass lites.

F. Provide spacers for glass lites where length plus width is larger than 50 inches.

1. Locate spacers directly opposite each other on both inside and outside faces of glass. Install correct size and spacing to preserve required face clearances, unless gaskets and glazing tapes are used that have demonstrated ability to maintain required face clearances and to comply with system performance requirements.
2. Provide 1/8-inch minimum bite of spacers on glass and use thickness equal to sealant width. With glazing tape, use thickness slightly less than final compressed thickness of tape.

G. Provide edge blocking where indicated or needed to prevent glass lites from moving sideways in glazing channel, as recommended in writing by glass manufacturer and according to requirements in referenced glazing publications.

H. Set glass lites in each series with uniform pattern, draw, bow, and similar characteristics.

I. Set glass lites with proper orientation so that coatings face exterior or interior as specified.

J. Where wedge-shaped gaskets are driven into one side of channel to pressurize sealant or gasket on opposite side, provide adequate anchorage so gasket cannot walk out when installation is subjected to movement.

K. Square cut wedge-shaped gaskets at corners and install gaskets in a manner recommended by gasket manufacturer to prevent corners from pulling away; seal corner joints and butt joints with sealant recommended by gasket manufacturer.

3.4 TAPE GLAZING

A. Position tapes on fixed stops so that, when compressed by glass, their exposed edges are flush with or protrude slightly above sightline of stops.

B. Install tapes continuously, but not necessarily in one continuous length. Do not stretch tapes to make them fit opening.

C. Cover vertical framing joints by applying tapes to heads and sills first, then to jambs. Cover horizontal framing joints by applying tapes to jambs, then to heads and sills.

D. Place joints in tapes at corners of opening with adjoining lengths butted together, not lapped. Seal joints in tapes with compatible sealant approved by tape manufacturer.

E. Do not remove release paper from tape until right before each glazing unit is installed.

F. Apply heel bead of elastomeric sealant where indicated on the Drawings.

G. Center glass lites in openings on setting blocks, and press firmly against tape by inserting dense compression gaskets formed and installed to lock in place against faces of removable stops. Start gasket applications at corners and work toward centers of openings.

H. Apply cap bead of elastomeric sealant over exposed edge of tape where fixed stops are located on the exterior.

3.5 GASKET GLAZING (DRY)

A. Cut compression gaskets to lengths recommended by gasket manufacturer to fit openings exactly, with allowance for stretch during installation.

B. Insert soft compression gasket between glass and frame or fixed stop so it is securely in place with joints miter cut and bonded together at corners.

C. Installation with Drive-in Wedge Gaskets: Center glass lites in openings on setting blocks, and press firmly against soft compression gasket by inserting dense compression gaskets formed and installed to lock in place against faces of removable stops. Start gasket applications at corners and work toward centers of openings. Compress gaskets to produce a weathertight seal without developing bending stresses in glass. Seal gasket joints with sealant recommended by gasket manufacturer.

D. Installation with Pressure-Glazing Stops: Center glass lites in openings on setting blocks, and press firmly against soft compression gasket. Install dense compression gaskets and pressure-glazing stops, applying pressure uniformly to compression gaskets. Compress gaskets to produce a weathertight seal without developing bending stresses in glass. Seal gasket joints with sealant recommended by gasket manufacturer.

E. Install gaskets so they protrude past face of glazing stops.

3.6 SEALANT GLAZING (WET)

A. Install continuous spacers, or spacers combined with cylindrical sealant backing, between glass lites and glazing stops to maintain glass face clearances and to prevent sealant from extruding into glass channel and blocking weep systems until sealants cure. Secure spacers or spacers and backings in place and in position to control depth of installed sealant relative to edge clearance for optimum sealant performance.

B. Force sealants into glazing channels to eliminate voids and to ensure complete wetting or bond of sealant to glass and channel surfaces.

C. Tool exposed surfaces of sealants to provide a substantial wash away from glass.

3.7 CLEANING AND PROTECTION

A. Immediately after installation remove nonpermanent labels and clean surfaces.

B. Protect glass from contact with contaminating substances resulting from construction operations. Examine glass surfaces adjacent to or below exterior concrete and other masonry surfaces at frequent intervals during construction, but not less than once a month, for buildup of dirt, scum, alkaline deposits, or stains.

1. If, despite such protection, contaminating substances do come into contact with glass, remove substances immediately as recommended in writing by glass manufacturer. Remove and replace glass that cannot be cleaned without damage to coatings.

C. Remove and replace glass that is damaged during construction period.

D. Wash glass on both exposed surfaces not more than four days before date scheduled for inspections that establish date of Substantial Completion. Wash glass as recommended in writing by glass manufacturer.

END OF SECTION

SECTION 09 29 00 – GYPSUM BOARD

PART 1 - GENERAL

1.1 SUMMARY

A. Work Included: The Work of this Section includes, but is not limited to, the following:

1. Gypsum board wall and ceiling applications screw-attached to steel systems.
2. Coverboard for exterior roofing application.
3. Drywall finishing with joint tape-and-compound.
4. Metal trims.

1.2 SUBMITTALS

A. Submittal Requirements.

B. Product Data: Submit manufacturer's specifications and installation instructions for materials for gypsum drywall and backer board. Submit other data as required to show compliance with these specifications.

C. Shop Drawings: Show locations, fabrication, and installation of control and expansion joints including plans, elevations, sections, details of components, and attachments to other units of Work.

1. Coordinate shop drawing submittal by clearly indicating concealed reinforcements, brackets and other such support assemblies for surface applied construction.

D. Samples: Submit three (3) full-size samples in 12 inch long length for each trim accessory indicated.

E. Product Certificates: Submit manufacturer’s certificates showing compliance with performance requirements for each type of gypsum board product from manufacturer.

F. Maintenance Data: Submit manufacturer’s maintenance instructions or recommendations for gypsum board products to include in maintenance manuals.

1.3 QUALITY ASSURANCE

A. Gypsum Board Terminology Standard: GA-505 by Gypsum Association.

B. Fire-Resistance-Rated Assemblies: For fire-resistance-rated assemblies, provide materials and construction identical to those tested in assembly indicated according to ASTM E 119 by an independent testing agency.

C. Mockups: Before beginning gypsum board installation, install mockups of at least 100 sq. ft. in surface area to demonstrate aesthetic effects and set quality standards for materials and execution.

1. Install mockups for the following:

   a. Each level of gypsum board finish indicated for use in exposed locations.

2. Apply or install final painting, on exposed surfaces for review of mockups.
3. Simulate finished lighting conditions for review of mockups.
4. Approved mockups may become part of the completed Work if undisturbed at time of Substantial Completion.

1.4 DELIVERY, STORAGE AND HANDLING

A. Store materials inside under cover and keep them dry and protected against weather, condensation, direct sunlight, construction traffic, and other potential causes of damage. Stack panels flat and supported on risers on a flat platform to prevent sagging.

1.5 FIELD CONDITIONS

A. Environmental Limitations: Comply with ASTM C 840 requirements or gypsum board manufacturer's written recommendations, whichever are more stringent.

B. Do not install panels that are wet, those that are moisture damaged, and those that are mold damaged.

1. Indications that panels are wet or moisture damaged include, but are not limited to, discoloration, sagging, or irregular shape.
2. Indications that panels are mold damaged include, but are not limited to, fuzzy or splotchy surface contamination and discoloration.

PART 2 - PRODUCTS

2.1 MANUFACTURERS

A. Manufacturers: Subject to compliance with requirements, provide glass-mat interior gypsum board from one of the following manufacturers:

1. USG.
2. Georgia Pacific.
3. National Gypsum.
4. Approved equal.

2.2 INTERIOR GYPSUM BOARD

A. General: Complying with ASTM C 36 or ASTM C 1396, as applicable to type of gypsum board indicated and whichever is more stringent.

B. Glass-Mat Interior Gypsum Board: ASTM C 1658, with fiberglass mat laminated to both sides. Specifically designed for interior use.

1. Basis of Design: Subject to compliance with requirements, provide “DensArmour Plus,” as manufactured by Georgia-Pacific Gypsum, LLC, or approved equal.
2. Core: 5/8 inch, Type X, unless otherwise indicated.
3. Long Edges: Tapered.
4. Mold Resistance: ASTM D 3273, score of 10 as rated according to ASTM D 3274.
5. Impact Resistance: ASTM C 1629-06 standard classification for abuse-resistant non-decorated interior gypsum panel products, hard body impact classification level 3, and both base and finish layers shall be min. 5/8” thick. As per code requirements.
6. Locations: In areas requiring flood damage resistant material, per code.

2.3 COVER BOARD

A. Cover Board & Sheathing: ASTM C 1177/C 1177M, glass-mat, water-resistant gypsum substrate, factory primed.

1. Basis-of-Design, Product: Subject to compliance with requirements, provide ‘DensDeck’ Prime Roof Board as supplied by Georgia-Pacific Gypsum, LLC., or approved equal.
2. Thickness: As indicated on the Drawings.

2.4 TRIM ACCESSORIES

A. Interior Trim: ASTM C 1047.

1. Material: Galvanized or aluminum-coated steel sheet or rolled zinc.
2. Shapes:

    a. Cornerbead.
    b. Bullnose bead.
    c. LC-Bead: J-shaped; exposed long flange receives joint compound.
    d. L-Bead: L-shaped; exposed long flange receives joint compound.
    e. U-Bead: J-shaped; exposed short flange does not receive joint compound.
    f. Expansion (control) joint.
    g. Curved-Edge Cornerbead: With notched or flexible flanges.

B. Wall Base:

1. Material: Type 304,16 GA stainless steel; #4 satin polish.
2. Profile:4 ¾” height w/ ¼” cover

3. Pre-formed corners

C. End Wall Guards:

1. Material: Type 304,16 GA stainless steel; #4 satin polish.
2. Profile: Width per partitions as shown on drawings; 2” return wings

2.5 JOINT TREATMENT MATERIALS

A. General: Comply with ASTM C 475.

B. Joint Tape: As recommended by panel manufacturer.

C. Joint Compound:

1. Interior Gypsum Wallboard: For each coat use formulation that is compatible with other compounds applied on previous or for successive coats.

a. Prefilling: At open joints, rounded or beveled panel edges, and damaged surface areas, use setting-type taping compound.

2.6 AUXILIARY MATERIALS

A. General: Provide auxiliary materials that comply with referenced installation standards and manufacturer's written recommendations.

B. Steel Drill Screws: ASTM C 1002. Provide galvanized screws, unless otherwise indicated.

1. Use screws complying with ASTM C 954 for fastening panels to steel members from 0.033 to 0.112 inch thick.

C. Leveling and Patching Compound: Latex cement as recommended by gypsum board manufacturer.

PART 3 - EXECUTION

3.1 EXAMINATION

A. Examine areas and substrates, with Installer present, and including welded hollow-metal frames and framing, for compliance with requirements and other conditions affecting performance.

B. Examine panels before installation. Reject panels that are wet, moisture damaged, and mold damaged.

C. Proceed with installation only after unsatisfactory conditions have been corrected.

3.2 APPLYING AND FINISHING PANELS, GENERAL

A. Comply with ASTM C 840.

B. Install ceiling panels across framing to minimize the number of abutting end joints and to avoid abutting end joints in central area of each ceiling. Stagger abutting end joints of adjacent panels not less than one framing member.

C. Install panels with face side out. Butt panels together for a light contact at edges and ends with not more than 1/16 inch of open space between panels. Do not force into place.

D. Form control and expansion joints with space between edges of adjoining gypsum panels.

E. Cover both faces of support framing with gypsum panels in concealed spaces (above ceilings, etc.), except in chases braced internally.

F. Seal joints between edges and abutting structural surfaces with acoustical sealant.

G. Attachment to Steel Framing: Attach panels so leading edge or end of each panel is attached to open (unsupported) edges of stud flanges first.

H. No drywall layers shall be continuous between two adjacent rooms. Interrupt drywall panels at all partition intersections, and close through perimeter fascia to the base building construction.

I. Isolate perimeter of gypsum board applied to non-load-bearing partitions at structural abutments, except floors. Provide 1/4- to 1/2-inch wide spaces at these locations and trim edges with edge trim where edges of panels are exposed. Seal joints between edges and abutting structural surfaces with acoustical sealant.

3.3 APPLYING INTERIOR GYPSUM BOARD

A. Single-Layer Application:

1. On ceilings, apply gypsum panels before wall/partition board application to greatest extent possible and at right angles to framing.
2. On partitions/walls, apply gypsum panels vertically (parallel to framing or required by fire-resistance-rated assembly, and minimize end joints.

    a. Stagger abutting end joints not less than one framing member in alternate courses of panels.

3. On Z-furring members, apply gypsum panels vertically (parallel to framing) with no end joints. Locate edge joints over furring members.
4. Fastening Methods: Apply gypsum panels to supports with steel drill screws.

B. Multilayer Application:

1. On ceilings, apply gypsum board indicated for base layers before applying base layers on walls/partitions; apply face layers in same sequence. Apply base layers at right angles to framing members and offset face-layer joints 1 framing member, 16 inches minimum, from parallel base-layer joints.
2. On partitions/walls, apply gypsum board indicated for base layers and face layers vertically (parallel to framing) with joints of base layers located over stud or furring member and face-layer joints offset at least one stud or furring member with base-layer joints.
3. On Z-furring members, apply base layer vertically (parallel to framing) and face layer either vertically (parallel to framing) or horizontally (perpendicular to framing) with vertical joints offset at least one furring member. Locate edge joints of base layer over furring members.
4. Fastening Methods: Fasten base layers and face layers separately to supports with screws.
5. Stagger joints for multiple layers of drywall.

C. Seal gypsum board shaft wall systems with acoustical sealant at perimeter of each assembly where it abuts other work and at joints and penetrations within each assembly. Install acoustical sealant to withstand dislocation by air-pressure differential between shaft and external spaces; maintain an airtight and smoke-tight seal; and comply with ASTM C 919 requirements or with manufacturer's written instructions, whichever are more stringent.

D. In shafts where gypsum board shaft-wall assemblies cannot be positioned within 4 inches of the shaft face of structural beams, floor edges, and similar projections into shaft, install 5/8-inch thick, gypsum board cants covering tops of projections. No recesses allowed (at steel beams especially).

1. Slope cant panels at least 75 degrees from horizontal. Set base edge of panels in adhesive and secure top edges to shaft walls at 24 inches o.c. with screws fastened to shaft-wall framing.
2. Where steel framing is required to support gypsum board cants, install framing at 24 inches o.c. and extend studs from the projection to shaft-wall framing.

3.4 INSTALLING TRIM ACCESSORIES

A. Control Joints: Install control joints according to ASTM C 840 and in specific locations approved by the Engineer for visual effect.

3.5 FINISHING GYPSUM BOARD

A. General: Treat gypsum board joints, interior angles, edge trim, control joints, penetrations, fastener heads, surface defects, and elsewhere as required to prepare gypsum board surfaces for decoration. Promptly remove residual joint compound from adjacent surfaces.

B. Prefill open joints, rounded or beveled edges, and damaged surface areas.

C. Apply joint tape over gypsum board joints, except those with trim having flanges not intended for tape.

D. Gypsum Board Finish Levels: Finish panels to levels indicated below and according to ASTM C 840:

1. Level 1: Concealed areas, and where indicated.
2. Level 2: Where indicated.
3. Level 3: Where indicated.

3.6 PROTECTION

A. Protect installed products from damage from weather, condensation, direct sunlight, construction, and other causes during remainder of the construction period.

B. Remove and replace panels that are wet, moisture damaged, and mold damaged.

1. Indications that panels are wet or moisture damaged include, but are not limited to, discoloration, sagging, or irregular shape.
2. Indications that panels are mold damaged include, but are not limited to, fuzzy or splotchy surface contamination and discoloration.

END OF SECTION

No Text On This Page

SECTION 09 91 00 – INTERIOR PAINTING

PART 1 - GENERAL

1.1 SUMMARY

A. Section Includes:

1. Surface preparation and the application of paint systems on the following interior substrates:

   a. Steel.
   b. Galvanized metal.
   c. Interior gypsum board.

1.2 SUBMITTALS

A. Product Data: For each type of product indicated.

B. Samples for Initial Selection: For each type of topcoat product indicated.

C. Samples for Verification: For each type of paint system and in each color and gloss of topcoat indicated.

1. Submit Samples on rigid backing, 8 inches square.
2. Step coats on Samples to show each coat required for system.
3. Label each coat of each Sample.
4. Label each Sample for location and application area.

D. Product List: For each product indicated, include the following:

1. Cross-reference to paint system and locations of application areas. Use same designations indicated on Drawings and in schedules.
2. Printout of current "MPI Approved Products List" for each product category specified in Part 2, with the proposed product highlighted.

1.3 QUALITY ASSURANCE

A. MPI Standards:

1. Products: Complying with MPI standards indicated and listed in "MPI Approved Products List."
2. Preparation and Workmanship: Comply with requirements in "MPI Architectural Painting Specification Manual" for products and paint systems indicated.

1.4 DELIVERY, STORAGE, AND HANDLING

A. Store materials not in use in tightly covered containers in well-ventilated areas with ambient temperatures continuously maintained at not less than 45 deg F.

1. Maintain containers in clean condition, free of foreign materials and residue.
2. Remove rags and waste from storage areas daily.

1.5 PROJECT CONDITIONS

A. Apply paints only when temperature of surfaces to be painted and ambient air temperatures are between 50 and 95 deg F.

B. Do not apply paints when relative humidity exceeds 85 percent; at temperatures less than 5 deg F above the dew point; or to damp or wet surfaces.

PART 2 - PRODUCTS

2.1 MANUFACTURERS

A. Manufacturers: Subject to compliance with requirements, provide products by the following:

1. Benjamin Moore & Co.
2. PPG Architectural Finishes, Inc.
3. Sherwin-Williams Company (The).
4. Or approved equal.

2.2 PAINT, GENERAL

A. Material Compatibility:

1. Provide materials for use within each paint system that are compatible with one another and substrates indicated, under conditions of service and application as demonstrated by manufacturer, based on testing and field experience.
2. For each coat in a paint system, provide products recommended in writing by manufacturers of topcoat for use in paint system and on substrate indicated.

B. Colors: As selected by Engineer from manufacturer's full range.

2.3 PRIMERS/ SEALERS

A. Interior Latex Primer/Sealer: Basis of Design: Benjamin Moore Eco Spec Latex Primer N372.

2.4 METAL PRIMERS

A. Quick-Drying Alkyd Metal Primer: Basis of Design: Benjamin Moore Super Spec HP Alkyd Metal Primer (P06).

B. Galvanized Metal Primer: Basis of Design: Benjamin Moore Ultra Spec HP Acrylic Metal Primer (HP04).

2.5 LATEX PAINTS

A. Interior Latex (Low Sheen): Basis of Design: Benjamin Moore Eco Spec Latex Flat Finish N373.

PART 3 - EXECUTION

3.1 EXAMINATION

A. Examine substrates and conditions, with Applicator present, for compliance with requirements for maximum moisture content and other conditions affecting performance of work.

B. Maximum Moisture Content of Substrates: When measured with an electronic moisture meter as follows:

1. Concrete: 12 percent.
2. Masonry (Clay and CMU): 12 percent.
3. Wood: 15 percent.

C. Verify suitability of substrates, including surface conditions and compatibility with existing finishes and primers.

D. Begin coating application only after unsatisfactory conditions have been corrected and surfaces are dry.

1. Beginning coating application constitutes Contractor's acceptance of substrates and conditions.

3.2 PREPARATION

A. Comply with manufacturer's written instructions and recommendations in "MPI Architectural Painting Specification Manual" applicable to substrates indicated.

B. Remove plates, machined surfaces, and similar items already in place that are not to be painted. If removal is impractical or impossible because of size or weight of item, provide surface-applied protection before surface preparation and painting.

1. After completing painting operations, use workers skilled in the trades involved to reinstall items that were removed. Remove surface-applied protection if any.
2. Do not paint over labels of independent testing agencies or equipment name, identification, performance rating, or nomenclature plates.

C. Clean substrates of substances that could impair bond of paints, including dirt, oil, grease, and incompatible paints and encapsulants.

1. Remove incompatible primers and reprime substrate with compatible primers as required to produce paint systems indicated.

D. Concrete Masonry Substrates: Remove efflorescence and chalk. Do not paint surfaces if moisture content or alkalinity of surfaces to be painted exceeds that permitted in manufacturer's written instructions.

E. Steel Substrates: Remove rust and loose mill scale. Clean using methods recommended in writing by paint manufacturer.

F. Galvanized-Metal Substrates: Remove grease and oil residue from galvanized sheet metal fabricated from coil stock by mechanical methods to produce clean, lightly etched surfaces that promote adhesion of subsequently applied paints.

3.3 APPLICATION

A. Apply paints according to manufacturer's written instructions.

1. Use applicators and techniques suited for paint and substrate indicated.
2. Paint surfaces behind movable equipment and furniture same as similar exposed surfaces. Before final installation, paint surfaces behind permanently fixed equipment or furniture with prime coat only.
3. Paint front and backsides of access panels, removable or hinged covers, and similar hinged items to match exposed surfaces.

B. Tint each undercoat a lighter shade to facilitate identification of each coat if multiple coats of same material are to be applied. Tint undercoats to match color of topcoat, but provide sufficient difference in shade of undercoats to distinguish each separate coat.

C. If undercoats or other conditions show through topcoat, apply additional coats until cured film has a uniform paint finish, color, and appearance.

D. Apply paints to produce surface films without cloudiness, spotting, holidays, laps, brush marks, roller tracking, runs, sags, ropiness, or other surface imperfections. Cut in sharp lines and color breaks.

3.4 FIELD QUALITY CONTROL

A. Testing of Paint Materials: The Engineer reserves the right to invoke the following procedure at any time and as often as the Engineer deems necessary during the period when paints are being applied:

1. The Engineer will engage the services of a qualified testing agency to sample paint materials being used. Samples of material delivered to Project site will be taken, identified, sealed, and certified in presence of Contractor.
2. Testing agency will perform tests for compliance with product requirements.

3. The Engineer may direct Contractor to stop applying paints if test results show materials being used do not comply with product requirements. Contractor shall remove noncomplying-paint materials from Project site, pay for testing, and repaint surfaces painted with rejected materials. Contractor will be required to remove rejected materials from previously painted surfaces if, on repainting with complying materials, the two paints are incompatible.

3.5 CLEANING AND PROTECTION

A. At end of each workday, remove rubbish, empty cans, rags, and other discarded materials from Project site.

B. After completing paint application, clean spattered surfaces. Remove spattered paints by washing, scraping, or other methods. Do not scratch or damage adjacent finished surfaces.

C. Protect work of other trades against damage from paint application. Correct damage to work of other trades by cleaning, repairing, replacing, and refinishing, as approved by Engineer, and leave in an undamaged condition.

D. At completion of construction activities of other trades prior to Substantial Completion, touch up and restore damaged or defaced painted surfaces.

3.6 INTERIOR PAINTING SCHEDULE

A. As indicated on the Drawings and Finish Schedule.

END OF SECTION

No Text On This Page

SECTION 10 44 16 – FIRE EXTINGUISHERS

PART 1 - GENERAL

1.1 SUMMARY

A. Section Includes:

1. Portable, hand-carried fire extinguishers and mounting brackets for fire extinguishers.

1.2 PREINSTALLATION MEETINGS

A. Preinstallation Conference: Conduct conference at Project site.

1. Review methods and procedures related to fire extinguishers including, but not limited to, the following:

a. Schedules and coordination requirements.

1.3 ACTION SUBMITTALS

A. Product Data: For each type of product. Include rating and classification, material descriptions, dimensions of individual components and profiles, and finishes for fire extinguisher and mounting brackets.

1.4 INFORMATIONAL SUBMITTALS

A. Warranty: Sample of special warranty.

1.5 CLOSEOUT SUBMITTALS

A. Operation and Maintenance Data: For fire extinguishers to include in maintenance manuals.

1.6 COORDINATION

A. Coordinate type and capacity of fire extinguishers with mounting brackets and indicated locations to ensure fit and function.

PART 2 - PRODUCTS

2.1 PERFORMANCE REQUIREMENTS

A. NFPA Compliance: Fabricate and label fire extinguishers to comply with NFPA 10, "Portable Fire Extinguishers."

B. Fire Extinguishers: Listed and labeled for type, rating, and classification by an independent testing agency acceptable to authorities having jurisdiction.

1. Provide fire extinguishers approved, listed, and labeled by FM Global.

2.2 PORTABLE, HAND-CARRIED FIRE EXTINGUISHERS

A. Fire Extinguishers: Type, size, and capacity for each mounting bracket indicated.

1. Manufacturers: Subject to compliance with requirements, available manufacturers offering products that may be incorporated into the Work include, but are not limited to the following:

a. Babcock-Davis.
b. JL Industries, Inc.; a division of the Activar Construction Products Group.
c. Nystrom.
d. Potter Roemer LLC.
e. Approved equal.

B. Fire Extinguishers: Type, size, and capacity for each mounting bracket indicated.

1. Basis of Design: Subject to compliance with requirements, provide “3010” as manufactured by Poetter Roemer, or Engineer approved equal.
2. Handles and Levers: Manufacturer's standard.
3. Instruction Labels: Include pictorial marking system complying with NFPA 10, Appendix B.

C. Multipurpose Dry-Chemical Type in Steel Container UL-rated 4-A:80-B:C, 10-lbnominal capacity, with monoammonium phosphate-based dry chemical in enameled-steel container.

2.3 MOUNTING BRACKETS

A. Mounting Brackets: Manufacturer's standard, galvanized steel, designed to secure fire extinguisher to wall or structure, of sizes required for types and capacities of fire extinguishers indicated, with plated or black baked-enamel finish.

B. Identification: Lettering complying with authorities having jurisdiction for letter style, size, spacing, and location. Locate as indicated by Engineer.

1. Identify bracket-mounted fire extinguishers with the words "FIRE EXTINGUISHER" in red letter decals applied to mounting surface.

a. Orientation: Vertical, as indicated.

PART 3 - EXECUTION

3.1 EXAMINATION

A. Examine fire extinguishers for proper charging and tagging.

1. Remove and replace damaged, defective, or undercharged fire extinguishers.

B. Proceed with installation only after unsatisfactory conditions have been corrected.

3.2 INSTALLATION

A. General: Install fire extinguishers and mounting brackets in locations indicated and in compliance with requirements of authorities having jurisdiction.

1. Mounting Brackets: 54 inches above finished floor to top of fire extinguisher.

B. Mounting Brackets: Fasten mounting brackets to surfaces, square and plumb, at locations indicated.

END OF SECTION

No Text On This Page

SECTION 10 61 00 – FOLDING GATES

PART 1 - GENERAL

1.1 SUMMARY

A. Section Includes:

1. Folding gates and hardware for exterior use.

1.2 SUBMITTALS

A. Product Data: Manufacturer's printed data on products to be furnished.

B. Shop Drawings: Complete layout and fabrication drawings.

C. Samples: Finish color samples for selection.

D. Keys: Turn over keys for door locks to Engineer at completion of project.

PART 2 - PRODUCTS

2.1 MANUFACTURERS

A. Manufacturers: Subject to compliance with requirements, manufacturers offer products which may be incorporated in the Work include, but are not limited to one of the following:

1. Blockader Gates.
2. L.K. Goodwin.
3. American Door.
4. Approved equal.

2.2 FOLDING GATES

A. Folding Gate: Accordion-style folding steel gate.

1. Height to Top of Fabric: As indicated.
2. Single fixed side.
3. Folded gate swinging against wall perpendicular to open gate position.
4. Finish: Galvanized.
5. Center drop pin.
6. Steel caster on free end.

2.3 COMPONENTS

A. Gate Fabric: Verticals with pantographic action lattices at top and bottom and intermediate locations as required by height. Galvanized for exterior use.

1. Verticals: Two $^{3}/_{4}$ inch by 3/8" inch steel channels spaced at not more than 6 inches on center.
2. Lattice Bars: 5/8 inch by 3/16 inch flat cold rolled steel bars arranged with machined roller bearings running in vertical channels.
3. End Verticals: Enclosed.
4. Self-locking tie-back arms.

B. Locks: Hasps; padlocks by others.

PART 3 - EXECUTION

3.1 INSTALLATION

A. Install in accordance with manufacturer's instructions.

B. Install plumb, level, and securely anchored to structural members where indicated.

C. Adjust gate for smooth, easy operation.

END OF SECTION

SECTION 22 05 00 – COMMON WORK RESULTS FOR PLUMBING – IG/PC

PART 1 - GENERAL

1.1 SUMMARY

A. This Section includes the following:

1. General Plumbing Requirements specifically applicable to all Division 22 Sections.
2. Some piping material and installation instructions common to most piping systems.
3. Grout.
4. Equipment installation requirements common to equipment sections.
5. Concrete bases.
6. Supports and anchorages.

1.2 DEFINITIONS

A. Finished Spaces: Spaces other than mechanical and electrical equipment rooms, furred spaces, pipe and duct chases, unheated spaces immediately below roof, spaces above ceilings, unexcavated spaces, crawlspaces, and tunnels.

B. Exposed, Interior Installations: Exposed to view indoors. Examples include finished occupied spaces and mechanical equipment rooms.

C. Concealed, Exterior Installations: Concealed from view and protected from weather conditions and physical contact by building occupants but subject to outdoor ambient temperatures. Examples include installations within unheated shelters.

D. The following are industry abbreviations for rubber materials:

1. EPDM: Ethylene-propylene-diene monomer rubber.
2. NBR: Acrylonitrile-butadiene rubber.

1.3 REFERENCES AND STANDARDS:

A. The editions recognized by the latest of the following are hereby included in and made a part of Division 22:

1. NFPA National Fire Protection Association
2. UL Underwriters' Laboratories, Inc.
3. NEMA National Electrical Manufacturer's Association
4. NEC National Electric Code
5. ASME American Society of Mechanical Engineers
6. AWS American Welding Society
7. ANSI American National Standards Institute
8. AGA American Gas Association
9. HI Hydronics Institute

10. OSHA Occupational Safety and Health Act
11. AWWA American Water Works Association
12. CISPI Cast Iron Soil Pipe Institute

1.4 QUALITY ASSURANCE AND COORDINATION

A. Electrical Characteristics for Equipment: Equipment of higher electrical characteristics may be furnished provided such proposed equipment is approved in writing and connecting electrical services, circuit breakers, and conduit sizes are appropriately modified. If minimum energy ratings or efficiencies are specified, equipment shall comply with requirements.

B. All work to meet in-force local plumbing code. In the case of discrepancies between the project contract documents and the in-force local code, the most stringent shall govern.

C. Comply with most current edition of New York City Building Code.

D. All materials and installations shall meet applicable FM Global requirements.

1.5 DELIVERY, STORAGE, AND HANDLING

A. Deliver pipes and tubes with factory-applied end caps. Maintain end caps through shipping, storage, and handling to prevent pipe end damage and to prevent entrance of dirt, debris, and moisture.

B. Store plastic pipes protected from direct sunlight. Support to prevent sagging and bending.

1.6 COORDINATION

A. Contractor shall coordinate the work of the different trades so that interference between piping, equipment, structural, and electrical work will be avoided. All necessary offsets in piping and ductwork, and all fittings, and other components, required to install the work properly shall be furnished complete in place at no additional cost.

B. Unless otherwise stipulated under a particular heading, the following rules relative to responsibilities of the entity performing the work will apply:

1. Make-up water piping connections shall be provided by the Plumbing Contractor to within five (5) feet of the required point of connection to the equipment and there terminated with a shut-off valve. Each trade shall make the final connection to the equipment it installs.

2. The Plumbing Contractor shall install all roughing-in pertaining to trade for each item of equipment furnished under another Section of the Specifications or by the City.

3. The Plumbing Contractor shall make final connections of equipment to rough-ins.

1.7 EQUIPMENT START-UP

A. Start-up of all plumbing equipment shall be video-recorded by the plumbing contractor. Two DVD copies shall be turned over to the City maintenance staff.

1.8 TESTING AND REPAIR

A. All piping systems shall be thoroughly cleaned and flushed prior to final testing.

B. Pressure testing shall be completed for the following piping systems:

1. Domestic water, sanitary and vent piping systems, and other systems as noted on the plans.

C. All testing must be witnessed and accurately recorded noting methods of testing, times, dates, and results.

D. Any damage as a result of tests shall be repaired or damaged materials replaced at no cost to the City.

1.9 SUBSTANTIAL COMPLETION

A. All work shall be cleaned prior to issuance of Substantial Completion.

B. Retouch or repaint factory painted prime and finish coats where scratched or damaged.

C. Deliver any equipment as required by this Specification to City and obtained signed receipts of delivery.

D. Clean equipment, restore damaged materials, and leave the Work in acceptable condition.

E. Remove all site tools, equipment, surplus materials and rubbish continuously at no additional cost to the City.

F. Contractor shall submit written certificates warranting each item of equipment.

PART 2 - PRODUCTS

2.1 EQUIPMENT AND MATERIALS:

A. All equipment and materials shall be furnished in strict accordance with the equipment named and according to Specification requirements.

B. Equipment and materials specified shall be considered to have prior approval, but submittal for approval is required. Furnish construction drawings to other Contractors when required to coordinate construction.

C. Where multiple manufacturers are named the drawings and specifications are based on the requirements and layouts for the equipment of the first named manufacturer. Any change required by the use of other approved manufacturers such as revisions to foundations, bases, piping, controls, wiring, openings, and appurtenances shall be made by the Contractor at no additional cost to the City.

2.2 PIPE, TUBE, AND FITTINGS - GENERAL

A. Refer to individual Division 22 Piping Sections for pipe, tube, and fitting materials and joining methods.

B. Pipe Threads: ASME B1.20.1 for factory-threaded pipe and pipe fittings.

2.3 GROUT

A. Description: ASTM C 1107, Grade B, non-shrink and nonmetallic, dry hydraulic-cement grout.

1. Characteristics: Post-hardening, volume-adjusting, non-staining, inoncorrosive, nongaseous, and recommended for interior and exterior applications.

2. Design Mix: 5000-psi, 28-day compressive strength.
3. Packaging: Premixed and factory packaged.

PART 3 - EXECUTION

3.1 PIPING SYSTEMS - COMMON REQUIREMENTS

A. All materials and/or equipment shall be installed per manufacturer's recommendations and instructions.

B. When temporary water is required, an approved backflow device shall be used and testing reports from device shall be sent to the Engineer for verification.

C. Install piping according to the following requirements and Division 22 Sections specifying piping systems.

D. Drawing plans, schematics, and diagrams indicate general location and arrangement of piping systems. Indicated locations and arrangements were used to size pipe and calculate friction loss, expansion, pump sizing, and other design considerations. Install piping as indicated unless deviations to layout are approved on Coordination Drawings.

E. Install piping in concealed locations, unless otherwise indicated and except in equipment rooms and service areas.

F. Install piping indicated to be exposed and piping in equipment rooms and service areas at right angles or parallel to building walls. Diagonal runs are prohibited unless specifically indicated otherwise.

G. Piping shall not project beyond walls or steel lines nor shall it hang below slabs more than is absolutely necessary. Particular attention shall be paid to the required clearances.

H. Offset piping where required to avoid interference with other work, to provide greater headroom or clearance, or to conceal pipe more readily. Offsets shall be properly drained or trapped where necessary.

I. Provide swing joints and expansion bends wherever required to allow the piping to expand without undue stress to connections or equipment.

J. Exposed piping around fixtures or in other conspicuous places shall not show tool marks at fittings.

K. Isolate pipe from the building construction to prevent transmission of vibration to the structure and to eliminate noise.

L. Install piping such that any equipment connected to piping may be removed by disconnecting two (2) flanges or unions and removing only one or two pipe sections. All equipment shall have bolted or screwed flanges or unions at pipe connections.

M. Install fittings for changes in direction and branch connections. T-drill system for mechanically formed tee connections and couplings, and Victaulic hole cut piping system are not allowed.

N. Do not route piping through transformer vaults or above transformers, panelboards, or switchboards, including the required service space for this equipment, unless the piping is serving this equipment.

O. Install groups of pipes parallel to each other, spaced to permit applying insulation and servicing of valves.

P. Install piping above accessible ceilings to allow sufficient space for ceiling panel removal.

Q. Install piping to permit valve servicing.

R. Install piping at indicated slopes.

S. Install piping free of sags and bends.

T. Install piping to allow application of insulation.

U. Eccentric reducing couplings shall be provided in all cases where air or water pockets would otherwise occur due to a reduction in pipe size.

V. Cap and plug all openings in pipes during construction with suitable metal plugs or cap to keep out dirt and rubbish until equipment is connected.

W. Install drains, consisting of a tee fitting, NPS 3/4 full port-ball valve, and short NPS 3/4 threaded nipple with cap, at low points in piping system mains and elsewhere as required for system drainage.

X. Select system components with pressure rating equal to or greater than system operating pressure.

Y. Fire-Barrier Penetrations: Maintain indicated fire rating of walls, partitions, ceilings, and floors at pipe penetrations. Seal pipe penetrations with firestop materials. Refer to Division 07 Section " FIRESTOPPING" for materials.

Z. Verify final equipment locations for roughing-in.

AA. Refer to equipment specifications in other Sections of these Specifications for roughing-in requirements.

BB. Provide proper access to materials and equipment that require inspection, repair, service, or maintenance.

CC. Minimum service access size for materials equipment/components above ceilings shall be 24" square.

3.2 PIPING JOINT CONSTRUCTION

A. Join pipe and fittings according to the following requirements and Division 22 Sections specifying piping systems.

B. Ream ends of pipes and tubes and remove burrs. Bevel plain ends of steel pipe.

C. Remove scale, slag, dirt, and debris from inside and outside of pipe and fittings before assembly.

D. Threaded Joints: Thread pipe with tapered pipe threads according to ASME B1.20.1. Cut threads full and clean using sharp dies. Ream threaded pipe ends to remove burrs and restore full ID. Join pipe fittings and valves as follows:

1. Apply appropriate tape or thread compound to external pipe threads unless dry seal threading is specified.

2. Damaged Threads: Do not use pipe or pipe fittings with threads that are corroded or damaged. Do not use pipe sections that have cracked or open welds.

3.3 PIPING CONNECTIONS

A. Pipe sizes indicated shall be carried full size to equipment served. Any change of size to match equipment connection shall be made within one foot of the equipment. At temperature control valves with sizes smaller than connected lines, reduction shall be made immediately adjacent to valves.

3.4 EQUIPMENT INSTALLATION - COMMON REQUIREMENTS

A. Install equipment to allow maximum possible headroom unless specific mounting heights are not indicated.

B. Install equipment level and plumb, parallel and perpendicular to other building systems and components in exposed interior spaces, unless otherwise indicated.

C. Install Plumbing equipment to facilitate service, maintenance, and repair or replacement of components. Connect equipment for ease of disconnecting, with minimum interference to other installations. Extend grease fittings to accessible locations.

D. Install equipment to allow right of way for piping installed at required slope.

3.5 ERECTION OF METAL SUPPORTS AND ANCHORAGES

A. Cut, fit, and place miscellaneous metal supports accurately in location, alignment, and elevation to support and anchor Plumbing materials and equipment.

3.6 GROUTING

A. Mix and install grout for Plumbing equipment base bearing surfaces, pump and other equipment base plates, and anchors.

B. Clean surfaces that will come into contact with grout.

C. Provide forms as required for placement of grout.

D. Avoid air entrapment during placement of grout.

E. Place grout, completely filling equipment bases.

F. Place grout on concrete bases and provide smooth bearing surface for equipment.

G. Place grout around anchors.

H. Cure placed grout.

END OF SECTION

SECTION 22 05 17 – SLEEVES AND SLEEVE SEALS FOR PLUMBING PIPING – IG/PC

PART 1 - GENERAL

1.1 SUMMARY

A. Section Includes:

1. Sleeves.
2. Stack-sleeve fittings.
3. Sleeve-seal systems.
4. Sleeve-seal fittings.
5. Grout.

1.2 SUBMITTALS

A. Product Data: For each type of product indicated.

PART 2 – PRODUCTS

2.1 SLEEVES

A. Cast-Iron Wall Pipes: Cast or fabricated of cast or ductile iron and equivalent to ductile-iron pressure pipe, with plain ends and integral waterstop unless otherwise indicated.

2.2 STACK-SLEEVE FITTINGS

A. Manufacturers: Subject to compliance with requirements, provide products by one of the following:

1. Smith, Jay R. Mfg.Co.
2. Zurn Specification Drainage Operation; Zurn Plumbing Products Group.
3. Metraflex.
4. Or Approved equal.

B. Description: Manufactured, cast-iron sleeve with integral clamping flange. Include clamping ring, bolts, and nuts for membrane flashing.

1. Underdeck Clamp: Clamping ring with setscrews.

2.3 SLEEVE-SEAL SYSTEMS

A. Manufacturers: Subject to compliance with requirements, provide products by one of the following:

1. Advance Products & Systems, Inc.
2. CALIPICO, Inc.
3. Metraflex Company (The)
4. Pipeline Seal and Insulator, Inc.
5. Proco Products, Inc.

6. Or approved equal.

B. Description: Modular sealing-element unit, designed for field assembly, for filling annular space between piping and sleeve.

1. Sealing Elements: EPDM-rubber interlocking links shaped to fit surface of pipe. Include type and number required for pipe material and size of pipe.

2. Pressure Plates: Carbon steel.

3. Connecting Bolts and Nuts: Carbon steel, with corrosion-resistant coating, of length required to secure pressure plates to sealing elements.

2.4 SLEEVE-SEAL FITTINGS

A. Manufacturers: Subject to compliance with requirements, provide products by one of the following:

1. Prescaled Systems

2. Flexicraft.

3. Link-Seal

4. Or approved equal.

B. Description: Manufactured plastic, sleeve-type, waterstop assembly made for imbedding in concrete slab or wall. Unit has plastic or rubber waterstop collar with center opening to match piping OD.

2.5 GROUT

A. Standard: ASTM C 1107, Grade B, post-hardening and volume-adjusting, dry, hydraulic-cement grout.

B. Characteristics: Nonshrink; recommended for interior and exterior applications.

C. Design Mix: 5000-psi, 28-day compressive strength.

D. Packaging: Premixed and factory packaged.

PART 3 – EXECUTION

3.1 SLEEVE INSTALLATION

A. Install sleeves for piping passing through penetrations in floors, partitions, roofs, and walls.

B. For sleeves that will have sleeve-seal system installed, select sleeves of size large enough to provide 1-inch annular clear space between piping and concrete slabs and walls.

1. Sleeves are not required for core-drilled holes.

C. Install sleeves in concrete floors, concrete roof slabs, and concrete walls as new slabs and walls are constructed.

1. Permanent sleeves are not required for holes in slabs formed by molded-PE or – PP sleeves.

2. Cut sleeves to length for mounting flush with both surfaces.

a. Exception: Extend sleeves installed in floors of mechanical equipment areas or other wet areas 2 inches above finished floor level.

3. Using grout, seal the space outside of sleeves in slabs and walls without sleeve-seal system.

D. Install sleeves for pipes passing through interior partitions.

1. Cut sleeves to length for mounting flush with both surfaces.

2. Install sleeves that are large enough to provide 1/4-inch annular clear space between sleeve and pipe or pipe insulation.

3. Seal annular space between sleeve and piping or piping insulation; use joint sealants Appropriate for size, depth, and location of joint. Comply with requirements for sealants specified in Section 079200 "Joint Sealants."

E. Fire-Barrier Penetrations: Maintain indicated fire rating of walls, partitions, ceilings, and floors at pipe penetrations. Seal pipe penetrations with firestop materials. Comply with requirements for firestopping specified in Section 078400 "Firestops."

3.2 STACK-SLEEVE-FITTING INSTALLATION

A. Install stack-sleeve fittings in new slabs as slabs are constructed.

1. Install fittings that are large enough to provide 1/4-inch annular clear space between sleeve and pipe or pipe insulation.

2. Secure flashing between clamping flanges for pipes penetrating floors with membrane waterproofing.

3. Install section of cast-iron soil pipe to extend sleeve to 2 inches above finished floor level.

4. Extend cast-iron sleeve fittings below floor slab as required to secure clamping ring if ring is specified.

5. Using grout, seal the space around outside of stack-sleeve fittings.

B. Fire-Barrier Penetrations: Maintain indicated fire rating of floors at pipe penetrations. Seal pipe penetrations with firestop materials. Comply with requirements for firestopping specified in Section 078400 “Firestops."

3.3 SLEEVE-SEAL-SYSTEM INSTALLATION

A. Install sleeve-seal systems in sleeves in exterior concrete walls and slabs-on-grade at service piping entries into building.

B. Select type, size, and number of sealing elements required for piping material and size and for sleeve ID or whole size. Position piping in center of sleeve. Center piping in penetration, assemble sleeve-seal system components, and install in annular space between piping and sleeve. Tighten bolts against pressure plates that cause sealing elements to expand and make a watertight seal.

3.4 SLEEVE-SEAL-FITTING INSTALLATION

A. Install sleeve-seal fittings in new walls and slabs as they are constructed.

B. Assemble fitting components of length to be flush with both surfaces of concrete slabs and walls. Position waterstop flange to be centered in concrete slab or wall.

C. Secure nailing flanges to concrete forms.

D. Using grout, seal the space around outside of sleeve-seal fittings.

3.5 SLEEVE AND SLEEVE-SEAL SCHEDULE

A. Use sleeves and sleeve seals for the following piping-penetration applications:

1. Concrete Slabs-on-Grade:

   a. Piping Smaller than NPS 6: Galvanized-steel wall sleeves with sleeve-seal system.

      1) Select sleeve size to allow for 1-inch annular clear space between piping and sleeve for installing sleeve-seal system.

   b. Piping NPS 6 and larger: Galvanized-steel wall sleeves with sleeve-seal system.

      1) Select sleeve size to allow for 1-inch annular clear space between piping and sleeve for installing sleeve-seal system.

2. Concrete Slabs above Grade:

   a. Piping Smaller than NPS 6: Galvanized-steel-pipe sleeves and Sleeve-seal fittings.

   b. Piping NPS 6 and larger: Galvanized-steel-pipe sleeves.

3. Interior Partitions:

   a. Piping Smaller than NPS 6: Galvanized-steel-pipe sleeves.

   b. Piping NPS 6 and larger: Galvanized-steel-sheet sleeves.

END OF SECTION

SECTION 22 05 23 – GENERAL DUTY VALVES FOR PLUMBING PIPING – IG/PC

PART 1 - GENERAL

1.1 SUMMARY

A. Section Includes:

1. Brass ball valves.
2. Bronze ball valves.
3. Bronze gate valves.
4. Iron gate Valve..

B. Related Sections:

1. Section 22 05 53 "Identification for Plumbing Piping and Equipment" for valve tags and schedules.
2. Section 22 11 16 "Domestic Water Piping" for valves applicable only to this piping.

1.2 DEFINITIONS

A. CWP: Cold working pressure.

B. EPDM: Ethylene propylene copolymer rubber.

C. NBR: Acrylonitrile-butadiene, Buna-N, or nitrile rubber.

D. NRS: Nonrising stem.

E. OS&Y: Outside screw and yoke.

F. RS: Rising stem.

G. SWP: Steam working pressure.

1.3 ACTION SUBMITTALS

A. Product Data: For each type of valve indicated.

1.4 QUALITY ASSURANCE

A. Source Limitations for Valves: Obtain each type of valve from single source from single manufacturer.

B. ASME Compliance:

1. ASME B16.10 and ASME B16.34 for ferrous valve dimensions and design criteria.
2. ASME B31.9 for building services piping valves.

C. NSF Compliance: NSF 61 for valve materials for potable-water service.

EFFECTIVE JAN. 4TH, 2014, ALL PROPOSED INSTALLATIONS OF VALVES TO BE UTILIZED ON ALL DOMESTIC DRINKING WATER SERVICES FOR HUMAN CONSUMPTION, MUST BE LEAD-FREE IN COMPLIANCE WITH THE AMENDED FEDERAL LAW, SAFE DRINKING WATER ACT (SDWA).

1.5 DELIVERY, STORAGE, AND HANDLING

A. Prepare valves for shipping as follows:

1. Protect internal parts against rust and corrosion.
2. Protect threads and flange faces ends.
3. Set ball and plug valves open to minimize exposure of functional surfaces.
4. Block check valves in either closed or open position.

B. Use the following precautions during storage:

1. Maintain valve end protection.
2. Store valves indoors and maintain at higher than ambient dew point temperature. If outdoor storage is necessary, store valves off the ground in watertight enclosures.

C. Use sling to handle large valves; rig sling to avoid damage to exposed parts. Do not use hand-wheels or stems as lifting or rigging points.

PART 2 - PRODUCTS

2.1 GENERAL REQUIREMENTS FOR VALVES

A. Refer to valve schedule articles for applications of valves.

B. Valve Pressure and Temperature Ratings: Not less than indicated and as required for system pressures and temperatures.

C. Valve Sizes: Same as upstream piping unless otherwise indicated.

D. Valve Actuator Types:

1. Handwheel: For valves other than quarter-turn types.

E. Valves in Insulated Piping: With 2-inch stem extensions and the following features:

1. Gate Valves: With rising stem.
2. Ball Valves: With extended operating handle of non-thermal-conductive material, and protective sleeve that allows operation of valve without breaking the vapor seal or disturbing insulation.

F. Valve-End Connections:

1. Flanged: With flanges according to ASME B16.1 for iron valves.

   Valve solder-joint connections are common in smaller sizes of plumbing piping. Soldering and brazing methods used to achieve required pressure-temperature ratings may damage internal valve parts. Special installation requirements for soldered valves may make threaded valves more cost-effective.

2. Solder Joint: With sockets according to ASME B16.18.
3. Threaded: With threads according to ASME B1.20.1.

G. Valve Bypass and Drain Connections: MSS SP-45.

2.2 BRASS BALL VALVES

A. Two-Piece, Regular-Port, Brass Ball Valves with Brass Trim:

1. Manufacturers: Subject to compliance with requirements, provide products by one of the following:

a. Hammond Valve.

b. Jamesbury; a subsidiary of Metso Automation.

c. Legend Valve.

d. Marwin Valve; a division of Richards Industries.

e. Milwaukee Valve Company.

f. Or approved equal

2. Description:

a. Standard: MSS SP-110.

b. SWP Rating: 150 psig.

c. CWP Rating: 600 psig.

d. Body Design: Two piece.

e. Body Material: Forged brass.

f. Ends: Threaded.

g. Seats: PTFE or TFE.

h. Stem: Brass.

i. Ball: Chrome-plated brass.

j. Port: Regular.

B. Three-Piece, Full-Port, Brass Ball Valves with Brass Trim:

1. Manufacturers: Subject to compliance with requirements, provide products by one of the following:

a. Jomar International, LTD.

b. Kitz Corporation.

c. Red-White Valve Corporation.

d. Watts Regulator Co.; a division of Watts Water Technologies, Inc.

e. Or approved equal.

2. Description:

a. Standard: MSS SP-110.

b. SWP Rating: 150 psig.

c. CWP Rating: 600 psig.

d. Body Design: Three piece.

e. Body Material: Forged brass.

f. Ends: Threaded.

g. Seats: PTFE or TFE.

h. Stem: Brass.

i. Ball: Chrome-plated brass.

j. Port: Full.

k. Vented.

l. Port: Full.

2.3 BRONZE BALL VALVES

A. Three-Piece, Full-Port, Bronze Ball Valves with Bronze Trim:

1. Manufacturers: Subject to compliance with requirements, provide products by one of the following:

a. Conbraco Industries, Inc.; Apollo Valves.

b. DynaQuip Controls.

c. Hammond Valve.

d. Milwaukee Valve Company.

e. NIBCO INC.

f. Red-White Valve Corporation.

g. Or approved equal.

2. Description:

a. Standard: MSS SP-110.

b. SWP Rating: 150 psig.

c. CWP Rating: 600 psig.

d. Body Design: Three piece.

e. Body Material: Bronze.

f. Ends: Threaded.

g. Seats: PTFE or TFE.

h. Stem: Bronze.

i. Ball: Chrome-plated brass.

j. Port: Full.

2.4 BRONZE GATE VALVES

A. Class 125, NRS Bronze Gate Valves:

1. Manufacturers: Subject to compliance with requirements, provide products by one of the following:

a. American Valve, Inc.

b. Crane Co.; Crane Valve Group; Crane Valves.

c. Crane Co.; Crane Valve Group; Jenkins Valves.

d. Crane Co.; Crane Valve Group; Stockham Division.

e. Hammond Valve.

f. Kitz Corporation.

g. Milwaukee Valve Company.
h. NIBCO INC.
i. Powell Valves.
j. Red-White Valve Corporation.
k. Watts Regulator Co.; a division of Watts Water Technologies, Inc.
l. Zy-Tech Global Industries, Inc.
m. Or approved equal.

2. Description:
   a. Standard: MSS SP-80, Type 1.
   b. CWP Rating: 200 psig.
   c. Body Material: ASTM B 62, bronze with integral seat and screw-in bonnet.
   d. Ends: Threaded or solder joint.
   e. Stem: Bronze.
   f. Disc: Solid wedge; bronze.
   g. Packing: Asbestos free.
   h. Handwheel: Malleable iron, bronze.

B. Class 125, RS Bronze Gate Valves:
   1. Manufacturers: Subject to compliance with requirements, provide products by one of the following:
      a. American Valve, Inc.
      b. Crane Co.; Crane Valve Group; Crane Valves.
      c. Crane Co.; Crane Valve Group; Jenkins Valves.
      d. Crane Co.; Crane Valve Group; Stockham Division.
      e. Hammond Valve.
      f. Kitz Corporation.
      g. Milwaukee Valve Company.
      h. NIBCO INC.
      i. Powell Valves.
      j. Watts Regulator Co.; a division of Watts Water Technologies, Inc.
      k. Zy-Tech Global Industries, Inc.
      l. Or approved equal.
   2. Description:
      a. Standard: MSS SP-80, Type 2.
      b. CWP Rating: 200 psig.
      c. Body Material: ASTM B 62, bronze with integral seat and screw-in bonnet.

d. Ends: Threaded.

e. Stem: Bronze.

f. Disc: Solid wedge; bronze.

g. Packing: Asbestos free.

h. Handwheel: Malleable iron.

C. Class 150, RS Bronze Gate Valves:

1. Manufacturers: Subject to compliance with requirements, [provide products by one of the following:

a. Crane Co.; Crane Valve Group; Crane Valves.

b. Crane Co.; Crane Valve Group; Stockham Division.

c. Hammond Valve.

d. Kitz Corporation.

e. Milwaukee Valve Company.

f. NIBCO INC.

g. Powell Valves.

h. Watts Regulator Co.; a division of Watts Water Technologies, Inc.

i. Zy-Tech Global Industries, Inc.

j. Or approved equal.

2. Description:

a. Standard: MSS SP-80, Type 2.

b. CWP Rating: 300 psig (2070 kPa).

c. Body Material: ASTM B 62, bronze with integral seat and union-ring bonnet.

d. Ends: Threaded.

e. Stem: Bronze.

f. Disc: Solid wedge; bronze.

g. Packing: Asbestos free.

h. Handwheel: Malleable iron

2.5 IRON GATE VALVES

A. Class 125, NRS, Iron Gate Valves:

1. Manufacturers: Subject to compliance with requirements, provide products by one of the following:

a. Crane Co.; Crane Valve Group; Crane Valves.

b. Crane Co.; Crane Valve Group; Jenkins Valves.

c. Crane Co.; Crane Valve Group; Stockham Division.

d. Flo Fab Inc.

e. Hammond Valve.
f. Kitz Corporation.
g. Legend Valve.
h. Milwaukee Valve Company.
i. NIBCO INC.
j. Powell Valves.
k. Red-White Valve Corporation.
l. Watts Regulator Co.; a division of Watts Water Technologies, Inc.
m. Zy-Tech Global Industries, Inc.
n. Or approved equal.

2. Description:
   a. Standard: MSS SP-70, Type I.
   b. CWP Rating: 200 psig .
   c. Body Material: ASTM A 126, gray iron with bolted bonnet.
   d. Ends: Flanged.
   e. Trim: Bronze.
   f. Disc: Solid wedge.
   g. Packing and Gasket: Asbestos free.

B. Class 125, OS&Y, Iron Gate Valves:
   1. Manufacturers: Subject to compliance with requirements, provide products by one of the following:
      a. Crane Co.; Crane Valve Group; Crane Valves.
      b. Crane Co.; Crane Valve Group; Jenkins Valves.
      c. Crane Co.; Crane Valve Group; Stockham Division.
      d. Flo Fab Inc.
      e. Hammond Valve.
      f. Kitz Corporation.
      g. Legend Valve.
      h. Milwaukee Valve Company.
      i. NIBCO INC.
      j. Powell Valves.
      k. Red-White Valve Corporation.
      l. Watts Regulator Co.; a division of Watts Water Technologies, Inc.
      m. Zy-Tech Global Industries, Inc.
      n. Or approved equal.

2. Description:
    a. Standard: MSS SP-70, Type I.
    b. CWP Rating: 200 psig .
    c. Body Material: ASTM A 126, gray iron with bolted bonnet.
    d. Ends: Flanged.
    e. Trim: Bronze.
    f. Disc: Solid wedge.
    g. Packing and Gasket: Asbestos free.

C. Class 250, NRS, Iron Gate Valves:
1. Manufacturers: Subject to compliance with requirements, provide products by one of the following:
    a. Crane Co.; Crane Valve Group; Crane Valves.
    b. Crane Co.; Crane Valve Group; Stockham Division.
    c. NIBCO INC.
    d. Or approved equal.
2. Description:
    a. Standard: MSS SP-70, Type I.
    b. CWP Rating: 500 psig .
    c. Body Material: ASTM A 126, gray iron with bolted bonnet.
    d. Ends: Flanged.
    e. Trim: Bronze.
    f. Disc: Solid wedge.
    g. Packing and Gasket: Asbestos free.

D. Class 250, OS&Y, Iron Gate Valves:
1. Manufacturers: Subject to compliance with requirements, provide products by one of the following:
    a. Crane Co.; Crane Valve Group; Crane Valves.
    b. Crane Co.; Crane Valve Group; Stockham Division.
    c. Hammond Valve.
    d. Milwaukee Valve Company.
    e. NIBCO INC.
    f. Powell Valves.
    g. Watts Regulator Co.; a division of Watts Water Technologies, Inc.
    h. Or approved equal.

2. Description:
   a. Standard: MSS SP-70, Type I.
   b. CWP Rating: 500 psig .
   c. Body Material: ASTM A 126, gray iron with bolted bonnet.
   d. Ends: Flanged.
   e. Trim: Bronze.
   f. Disc: Solid wedge.
   g. Packing and Gasket: Asbestos free.

PART 3 - EXECUTION

3.1 EXAMINATION

A. Examine valve interior for cleanliness, freedom from foreign matter, and corrosion. Remove special packing materials, such as blocks, used to prevent disc movement during shipping and handling.

B. Operate valves in positions from fully open to fully closed. Examine guides and seats made accessible by such operations.

C. Examine threads on valve and mating pipe for form and cleanliness.

D. Examine mating flange faces for conditions that might cause leakage. Check bolting for proper size, length, and material. Verify that gasket is of proper size, that its material composition is suitable for service, and that it is free from defects and damage.

E. Do not attempt to repair defective valves; replace with new valves.

3.2 VALVE INSTALLATION

A. Install valves with unions or flanges at each piece of equipment arranged to allow service, maintenance, and equipment removal without system shutdown.

B. Locate valves for easy access and provide separate support where necessary.

C. Install valves in horizontal piping with stem at or above center of pipe.

D. Install valves in position to allow full stem movement.

3.3 ADJUSTING

A. Adjust or replace valve packing after piping systems have been tested and put into service but before final adjusting and balancing. Replace valves if persistent leaking occurs.

3.4 DOMESTIC, HOT- AND COLD-WATER VALVE SCHEDULE

1. All valves to be installed as indicated on the contract drawings.

END OF SECTION

No Text On This Page

SECTION 22 05 29 – HANGERS AND SUPPORTS FOR PLUMBING PIPING AND EQUIPMENT – IG/PC

PART 1 - GENERAL

1.1 RELATED DOCUMENTS

A. The work under this section shall include all labor, material, plant equipment, services and administrative tasks required to complete and make operable the plumbing work shown on the Drawings and specified herein.

1.2 SUMMARY

A. Section Includes:

1. Metal pipe hangers and supports.
2. Trapeze pipe hangers.
3. Metal framing systems.
4. Thermal-hanger shield inserts.
5. Fastener systems.
6. Pipe stands.
7. Pipe positioning systems.
8. Equipment supports.

B. Related Sections:

1. Section 22 05 00 "Common Work Results for Plumbing”.

1.3 DEFINITIONS

A. MSS: Manufacturers Standardization Society of the Valve and Fittings Industry Inc.

1.4 PERFORMANCE REQUIREMENTS

A. Design Criteria: Design trapeze pipe hangers and equipment supports, including comprehensive engineering analysis by a professional engineer licensed in the State of New York, using performance requirements and design criteria indicated.

B. Structural Performance: Hangers and supports for plumbing piping and equipment shall withstand the effects of gravity loads and stresses within limits and under conditions indicated according to ASCE/SEI 7.

1.5 SUBMITTALS

A. Product Data: For each type of product indicated.

B. Shop Drawings: Show fabrication and installation details and include calculations for the following; include Product Data for components:

1. Trapeze pipe hangers.
2. Pipe hangers, rods, washers and nuts.
3. Pipe stands.
4. Equipment supports.

PART 2 – PRODUCTS

2.1 METAL PIPE HANGERS AND SUPPORTS

A. Carbon-Steel Pipe Hangers and Supports:

1. Description: MSS SP-58, Types 1 through 58, factory-fabricated components.
2. Galvanized Metallic Coatings: Pre-galvanized or hot dipped.
3. Nonmetallic Coatings: Plastic coating, jacket, or liner.
4. Padded Hangers: Hanger with fiberglass or other pipe insulation pad or cushion to support bearing surface of piping.
5. Hanger Rods: Continuous-thread rod, nuts, and washer made of carbon steel.

B. Copper Pipe Hangers:

1. Description: MSS SP-58, Types 1 through 58, copper-coated-steel, factory-fabricated components.
2. Hanger Rods: Continuous-thread rod, nuts, and washer made of stainless steel.

2.2 METAL FRAMING SYSTEMS

A. MFMA Manufacturer Metal Framing Systems:

1. Manufacturers: Subject to compliance with requirements, provide products by one of the following:
   a. Allied Tube & Conduit.
   b. Cooper B-Line, Inc.
   c. Flex-Strut Inc.
   d. GS Metals Corp.
   e. Thomas & Betts Corporation.
   f. Unistrut Corporation; Tyco International, Ltd.
   g. Wesanco, Inc.
   h. Or approved equal.
2. Description: Shop- or field-fabricated pipe-support assembly for supporting multiple parallel pipes.
3. Standard: MFMA-4.
4. Channels: Continuous slotted steel channel with inturned lips.
5. Channel Nuts: Formed or stamped steel nuts or other devices designed to fit into channel slot and, when tightened, prevent slipping along channel.
6. Hanger Rods: Continuous-thread rod, nuts, and washer made of carbon steel.
7. Metallic Coating: Electroplated zinc, Hot-dipped galvanized.
8. Paint Coating: Epoxy.
9. Plastic Coating: PVC, Polyurethane.

10. Combination Coating:

2.3 FASTENER SYSTEMS

A. Powder-Actuated Fasteners: Threaded-steel stud, for use in hardened portland cement concrete with pull-out, tension, and shear capacities appropriate for supported loads and building materials where used.

B. Mechanical-Expansion Anchors: Insert-wedge-type, zinc-coated stainless- steel anchors, for use in hardened portland cement concrete; with pull-out, tension, and shear capacities appropriate for supported loads and building materials where used.

2.4 PIPE STANDS

A. General Requirements for Pipe Stands: Shop- or field-fabricated assemblies made of manufactured corrosion-resistant components to support roof-mounted piping.

B. Compact Pipe Stand: One-piece plastic unit with integral-rod roller, pipe clamps, or V-shaped cradle to support pipe, for roof installation without membrane penetration.

C. Low-Type, Single-Pipe Stand: One-piece stainless-steel base unit with plastic roller, for roof installation without membrane penetration.

D. High-Type, Single-Pipe Stand:

1. Description: Assembly of base, vertical and horizontal members, and pipe support, for roof installation without membrane penetration.

2. Base: Stainless steel.

3. Vertical Members: Two or more cadmium-plated-steel or stainless-steel, continuous- thread rods.

4. Horizontal Member: Cadmium-plated-steel or stainless-steel rod with plastic or stainless- steel, roller-type pipe support.

E. High-Type, Multiple-Pipe Stand:

1. Description: Assembly of bases, vertical and horizontal members, and pipe supports, for roof installation without membrane penetration.

2. Bases: One or more; plastic.

3. Vertical Members: Two or more protective-coated-steel channels.

4. Horizontal Member: Protective-coated-steel channel.

5. Pipe Supports: Galvanized-steel, clevis-type pipe hangers.

F. Curb-Mounting-Type Pipe Stands: Shop- or field-fabricated pipe supports made from structural-steel shapes, continuous-thread rods, and rollers, for mounting on permanent stationary roof curb.

2.5 EQUIPMENT SUPPORTS

A. Description: Welded, shop- or field-fabricated equipment support made from structural carbon- steel shapes.

2.6 MISCELLANEOUS MATERIALS

A. Structural Steel: ASTM A 36/A 36M, carbon-steel plates, shapes, and bars;

black and galvanized.

B. Grout: ASTM C 1107, factory-mixed and -packaged, dry, hydraulic-cement, nonshrink and nonmetallic grout; suitable for interior and exterior applications.

1. Properties: Nonstaining, noncorrosive, and nongaseous.

2. Design Mix: 5000-psi, 28-day compressive strength.

PART 3 - EXECUTION

3.1 HANGER AND SUPPORT INSTALLATION

A. Metal Pipe-Hanger Installation: Comply with MSS SP-69 and MSS SP-89. Install hangers, supports, clamps, and attachments as required to properly support piping from the building structure.

B. Metal Trapeze Pipe-Hanger Installation: Comply with MSS SP-69 and MSS SP-89. Arrange for grouping of parallel runs of horizontal piping, and support together on field-fabricated trapeze pipe hangers.

1. Pipes of Various Sizes: Support together and space trapezes for smallest pipe size or install intermediate supports for smaller diameter pipes as specified for individual pipe hangers.

2. Field fabricate from ASTM A 36/A 36M, carbon-steel shapes selected for loads being supported. Weld steel according to AWS D1.1/D1.1M.

C. Metal Framing System Installation: Arrange for grouping of parallel runs of piping, and support together on field-assembled metal framing systems.

D. Thermal-Hanger Shield Installation: Install in pipe hanger or shield for insulated piping.

E. Fastener System Installation:

1. Install powder-actuated fasteners for use in lightweight concrete or concrete slabs less than 4 inches (100 mm) thick in concrete after concrete is placed and completely cured. Use operators that are licensed by powder-actuated tool manufacturer. Install fasteners according to powder-actuated tool manufacturer's operating manual.

2. Install mechanical-expansion anchors in concrete after concrete is placed and completely cured. Install fasteners according to manufacturer's written instructions.

F. Pipe Positioning-System Installation: Install support devices to make rigid supply and waste piping connections to each plumbing fixture.

G. Install hangers and supports complete with necessary attachments, inserts, bolts, rods, nuts, washers, and other accessories.

H. Equipment Support Installation: Fabricate from welded-structural-steel shapes.

I. Install hangers and supports to allow controlled thermal and seismic movement of piping systems, to permit freedom of movement between pipe anchors, and to facilitate action of expansion joints, expansion loops, expansion bends, and similar units.

J. Install lateral bracing with pipe hangers and supports to prevent swaying.

K. Install building attachments within concrete slabs or attach to structural steel. Install

additional attachments at concentrated loads, including valves, flanges, and strainers, NPS 2-1/2 (DN 65) and larger and at changes in direction of piping. Install concrete inserts before concrete is placed; fasten inserts to forms and install reinforcing bars through openings at top of inserts.

L. Load Distribution: Install hangers and supports so that piping live and dead loads and stresses from movement will not be transmitted to connected equipment.

M. Pipe Slopes: Install hangers and supports to provide indicated pipe slopes and to not exceed maximum pipe deflections allowed by ASME B31.9 for building services piping.

N. Insulated Piping:

1. Attach clamps and spacers to piping.

   a. Piping Operating above Ambient Air Temperature: Clamp may project through insulation.

   b. Piping Operating below Ambient Air Temperature: Use thermal-hanger shield insert with clamp sized to match OD of insert.

   c. Do not exceed pipe stress limits allowed by ASME B31.9 for building services piping.

2. Install MSS SP-58, Type 39, protection saddles if insulation without vapor barrier is indicated. Fill interior voids with insulation that matches adjoining insulation.

   a. Option: Thermal-hanger shield inserts may be used. Include steel weight- distribution plate for pipe NPS 4 and larger if pipe is installed on rollers.

3. Install MSS SP-58, Type 40, protective shields on cold piping with vapor barrier. Shields shall span an arc of 180 degrees.

   a. Option: Thermal-hanger shield inserts may be used. Include steel weight- distribution plate for pipe NPS 4 and larger if pipe is installed on rollers.

4. Shield Dimensions for Pipe: Not less than the following:

   a. NPS 1/4 to NPS 3-1/2: 12 inches long and 0.048 inch thick.

   b. NPS 4: 12 inches long and 0.06 inch thick.

   c. NPS 5 to NPS 6 : 18 inches long and 0.06 inch thick.

   d. NPS 8 to NPS 14: 24 inches long and 0.075 inch thick.

   e. NPS 16 to NPS 24: 24 inches long and 0.105 inch thick.

5. Pipes NPS 8 and Larger: Include wood or reinforced calcium-silicate-insulation inserts of length at least as long as protective shield.

6. Thermal-Hanger Shields: Install with insulation same thickness as piping insulation.

3.2 EQUIPMENT SUPPORTS

A. Fabricate structural-steel stands to suspend equipment from structure overhead or to support equipment above floor.

B. Grouting: Place grout under supports for equipment and make bearing surface smooth.

C. Provide lateral bracing, to prevent swaying, for equipment supports.

3.3 ADJUSTING

A. Hanger Adjustments: Adjust hangers to distribute loads equally on attachments and to achieve indicated slope of pipe.

B. Trim excess length of continuous-thread hanger and support rods to 1-1/2 inches.

3.4 PAINTING

A. Touchup: Clean field welds and abraded areas of shop paint. Paint exposed areas immediately after erecting hangers and supports. Use same materials as used for shop painting. Comply with SSPC-PA 1 requirements for touching up field-painted surfaces.

1. Apply paint by brush or spray to provide a minimum dry film thickness of 2.0 mils (0.05 mm).

B. Touchup: Cleaning and touchup painting of field welds, bolted connections, and abraded areas of shop paint on miscellaneous metal are specified in Section 099123 "Interior Painting." Section 099600 "High-Performance Coatings."

C. Galvanized Surfaces: Clean welds, bolted connections, and abraded areas and apply galvanizing-repair paint to comply with ASTM A 780.

3.5 HANGER AND SUPPORT SCHEDULE

A. Specific hanger and support requirements are in Sections specifying piping systems and equipment.

B. Comply with MSS SP-69 for pipe-hanger selections and applications that are not specified in Piping system Sections.

C. Use hangers and supports with galvanized metallic coatings for piping and equipment that will not have field-applied finish.

D. Use nonmetallic coatings on attachments for electrolytic protection where attachments are in direct contact with copper tubing.

E. Use carbon-steel pipe hangers and supports metal trapeze pipe hangers, metal framing systems and attachments for general service applications.

F. Use stainless-steel pipe hangers and stainless-steel or corrosion-resistant attachments for hostile environment applications.

G. Use copper-plated pipe hangers and stainless-steel attachments for copper piping and tubing.

H. Use padded hangers for piping that is subject to scratching.

I. Use thermal-hanger shield inserts for insulated piping and tubing.

J. Horizontal-Piping Hangers and Supports: Unless otherwise indicated and except as specified in piping system Sections, install the following types:

1. Adjustable, Steel Clevis Hangers (MSS Type 1): For suspension of noninsulated or insulated, stationary pipes NPS 1/2 to NPS 30.

2. Yoke-Type Pipe Clamps (MSS Type 2): For suspension of up to 1050 deg F, pipes NPS 4 to NPS 24, requiring up to 4 inches of insulation.
3. Carbon- or Alloy-Steel, Double-Bolt Pipe Clamps (MSS Type 3): For suspension of pipes NPS 3/4 to NPS 36, requiring clamp flexibility and up to 4 inches of insulation.
4. Steel Pipe Clamps (MSS Type 4): For suspension of cold and hot pipes NPS 1/2 to NPS 24 if little or no insulation is required.
5. Pipe Hangers (MSS Type 5): For suspension of pipes NPS 1/2 to NPS 4, to allow off-center closure for hanger installation before pipe erection.
6. Adjustable, Swivel Split- or Solid-Ring Hangers (MSS Type 6): For suspension of noninsulated, stationary pipes NPS 3/4 to NPS 8.
7. Adjustable, Steel Band Hangers (MSS Type 7): For suspension of noninsulated, stationary pipes NPS 1/2 to NPS 8 .
8. Adjustable Band Hangers (MSS Type 9): For suspension of noninsulated, stationary pipes NPS 1/2 to NPS 8.
9. Adjustable, Swivel-Ring Band Hangers (MSS Type 10): For suspension of noninsulated, stationary pipes NPS 1/2 to NPS 8 .
10. Split Pipe Ring with or without Turnbuckle Hangers (MSS Type 11): For suspension of noninsulated, stationary pipes NPS 3/8 to NPS 8.
11. Extension Hinged or Two-Bolt Split Pipe Clamps (MSS Type 12): For suspension of noninsulated, stationary pipes NPS 3/8 to NPS 3
12. U-Bolts (MSS Type 24): For support of heavy pipes NPS 1/2 to NPS 30.
13. Clips (MSS Type 26): For support of insulated pipes not subject to expansion or contraction.
14. Pipe Saddle Supports (MSS Type 36): For support of pipes NPS 4 to NPS 36, with steel-pipe base stanchion support and cast-iron floor flange or carbon-steel plate.
15. Pipe Stanchion Saddles (MSS Type 37): For support of pipes NPS 4 to NPS 36, with steel-pipe base stanchion support and cast-iron floor flange or carbon- steel plate, and with U-bolt to retain pipe.
16. Adjustable Pipe Saddle Supports (MSS Type 38): For stanchion-type support for pipes NPS 2-1/2 to NPS 36 if vertical adjustment is required, with steel- pipe base stanchion support and cast-iron floor flange.
17. Single-Pipe Rolls (MSS Type 41): For suspension of pipes NPS 1 to NPS 30, from two rods if longitudinal movement caused by expansion and contraction might occur.
18. Adjustable Roller Hangers (MSS Type 43): For suspension of pipes NPS 2-1/2 to NPS 24, from single rod if horizontal movement caused by expansion and contraction might occur.
19. Complete Pipe Rolls (MSS Type 44): For support of pipes NPS 2 to NPS 42 if longitudinal movement caused by expansion and contraction might occur but vertical adjustment is not necessary.

20. Pipe Roll and Plate Units (MSS Type 45): For support of pipes NPS 2 to NPS 24 if small horizontal movement caused by expansion and contraction might occur and vertical adjustment is not necessary.

21. Adjustable Pipe Roll and Base Units (MSS Type 46): For support of pipes NPS 2 to NPS 30 if vertical and lateral adjustment during installation might be required in addition to expansion and contraction.

K. Vertical-Piping Clamps: Unless otherwise indicated and except as specified in piping system Sections, install the following types:

1. Extension Pipe or Riser Clamps (MSS Type 8): For support of pipe risers NPS 3/4 to NPS 24.

2. Carbon- or Alloy-Steel Riser Clamps (MSS Type 42): For support of pipe risers NPS 3/4 to NPS 24if longer ends are required for riser clamps.

L. Hanger-Rod Attachments: Unless otherwise indicated and except as specified in piping system Sections, install the following types:

1. Steel Turnbuckles (MSS Type 13): For adjustment up to 6 inches (150 mm) for heavy loads.

2. Steel Clevises (MSS Type 14): For 120 to 450 deg F piping installations.

3. Swivel Turnbuckles (MSS Type 15): For use with MSS Type 11, split pipe rings.

4. Malleable-Iron Sockets (MSS Type 16): For attaching hanger rods to various types of building attachments.

5. Steel Weldless Eye Nuts (MSS Type 17): For 120 to 450 deg F piping installations.

M. Building Attachments: Unless otherwise indicated and except as specified in piping system Sections, install the following types:

1. Steel or Malleable Concrete Inserts (MSS Type 18): For upper attachment to suspend pipe hangers from concrete ceiling.

2. Top-Beam C-Clamps (MSS Type 19): For use under roof installations with bar-joist construction, to attach to top flange of structural shape.

3. Side-Beam or Channel Clamps (MSS Type 20): For attaching to bottom flange of beams, channels, or angles.

4. Center-Beam Clamps (MSS Type 21): For attaching to center of bottom flange of beams.

5. Welded Beam Attachments (MSS Type 22): For attaching to bottom of beams if loads are considerable and rod sizes are large.

6. C-Clamps (MSS Type 23): For structural shapes.

7. Top-Beam Clamps (MSS Type 25): For top of beams if hanger rod is required tangent to flange edge.

8. Side-Beam Clamps (MSS Type 27): For bottom of steel I-beams.

9. Steel-Beam Clamps with Eye Nuts (MSS Type 28): For attaching to bottom of steel I- beams for heavy loads.

10. Linked-Steel Clamps with Eye Nuts (MSS Type 29): For attaching to bottom of steel I-beams for heavy loads, with link extensions.
11. Malleable-Beam Clamps with Extension Pieces (MSS Type 30): For attaching to structural steel.
12. Welded-Steel Brackets: For support of pipes from below or for suspending from above by using clip and rod. Use one of the following for indicated loads:
    a. Light (MSS Type 31): 750 lb .
    b. Medium (MSS Type 32): 1500 lb .
    c. Heavy (MSS Type 33): 3000 lb .
13. Side-Beam Brackets (MSS Type 34): For sides of steel or wooden beams.
14. Plate Lugs (MSS Type 57): For attaching to steel beams if flexibility at beam is required.
15. Horizontal Travelers (MSS Type 58): For supporting piping systems subject to linear horizontal movement where headroom is limited.

N. Saddles and Shields: Unless otherwise indicated and except as specified in piping system Sections, install the following types:
    1. Steel-Pipe-Covering Protection Saddles (MSS Type 39): To fill interior voids with insulation that matches adjoining insulation.
    2. Protection Shields (MSS Type 40): Of length recommended in writing by manufacturer to prevent crushing insulation.
    3. Thermal-Hanger Shield Inserts: For supporting insulated pipe.

Q. Comply with MFMA-103 for metal framing system selections and applications that are not specified in piping system Sections.

R. Use powder-actuated fasteners or mechanical-expansion anchors instead of building attachments where required in concrete construction.

END OF SECTION

No Text On This Page

SECTION 22 05 53 – IDENTIFICATION FOR PLUMBING PIPING AND EQUIPMENT – IG/PC

PART 1 - GENERAL

1.1 SUMMARY

A. Section Includes:

1. Equipment labels.
2. Warning signs and labels.
3. Pipe labels.
4. Stencils.
5. Valve tags.
6. Warning tags.

1.2 ACTION SUBMITTALS

A. Product Data: For each type of product indicated.

B. Samples: For color, letter style, and graphic representation required for each identification material and device.

C. Equipment Label Schedule: Include a listing of all equipment to be labeled with the proposed content for each label.

D. Valve numbering scheme.

E. Valve Schedules: For each piping system to include in maintenance manuals.

1.3 COORDINATION

A. Coordinate installation of identifying devices with completion of covering and painting of surfaces where devices are to be applied.

B. Coordinate installation of identifying devices with locations of access panels and doors.

C. Install identifying devices before installing acoustical ceilings and similar concealment.

PART 2 - PRODUCTS

2.1 EQUIPMENT LABELS

A. Metal Labels for Equipment:

1. Material and Thickness: Aluminum, 0.032-inch minimum thickness, and having predrilled or stamped holes for attachment hardware.
2. Minimum Label Size: Length and width vary for required label content, but not less than 2-1/2 by 3/4 inch.
3. Minimum Letter Size: 1/4 inch for name of units if viewing distance is less than 24 inches, 1/2 inch for viewing distances up to 72 inches, and proportionately larger lettering for greater viewing distances. Include secondary lettering two-thirds to three-fourths the size of principal lettering.
4. Fasteners: Stainless-steel self-tapping screws.

5. Adhesive: Contact-type permanent adhesive, compatible with label and with substrate.

B. Plastic Labels for Equipment:

1. Material and Thickness: Multilayer, multicolor, plastic labels for mechanical engraving, 1/8 inch (3.2 mm) thick, and having predrilled holes for attachment hardware.
2. Letter Color: Black.
3. Background Color: Yellow.
4. Maximum Temperature: Able to withstand temperatures up to 160 deg F.
5. Minimum Label Size: Length and width vary for required label content, but not less than 2-1/2 by 3/4 inch.
6. Minimum Letter Size: 1/4 inch for name of units if viewing distance is less than 24 inches, 1/2 inch for viewing distances up to 72 inches, and proportionately larger lettering for greater viewing distances. Include secondary lettering two-thirds to three-fourths the size of principal lettering.
7. Fasteners: Stainless-steel rivets or self-tapping screws.
8. Adhesive: Contact-type permanent adhesive, compatible with label and with substrate.

C. Label Content: Include equipment's Drawing designation or unique equipment number, Drawing numbers where equipment is indicated (plans, details, and schedules), plus the Specification Section number and title where equipment is specified.

D. Equipment Label Schedule: For each item of equipment to be labeled, on 8-1/2-by-11-inch bond paper. Tabulate equipment identification number and identify Drawing numbers where equipment is indicated (plans, details, and schedules), plus the Specification Section number and title where equipment is specified. Equipment schedule shall be included in operation and maintenance data.

2.2 WARNING SIGNS AND LABELS

A. Material and Thickness: Multilayer, multicolor, plastic labels for mechanical engraving, 1/8 inch thick, and having predrilled holes for attachment hardware.

B. Letter Color: Black.

C. Background Color: White

D. Maximum Temperature: Able to withstand temperatures up to 160 deg F (71 deg C).

E. Minimum Label Size: Length and width vary for required label content, but not less than 2-1/2 by 3/4 inch (64 by 19 mm).

F. Minimum Letter Size: 1/4 inch (6.4 mm) for name of units if viewing distance is less than 24 inches (600 mm), 1/2 inch (13 mm) for viewing distances up to 72 inches (1830 mm), and proportionately larger lettering for greater viewing distances. Include secondary lettering two-thirds to three-fourths the size of principal lettering.

G. Fasteners: Stainless-steel rivets or self-tapping screws.

H. Adhesive: Contact-type permanent adhesive, compatible with label and with substrate.

I. Label Content: Include caution and warning information, plus emergency notification instructions.

2.3 PIPE LABELS

A. General Requirements for Manufactured Pipe Labels: Preprinted, color-coded, with lettering indicating service, and showing flow direction.

B. Pretensioned Pipe Labels: Precoiled, semirigid plastic formed to cover full circumference of pipe and to attach to pipe without fasteners or adhesive.

C. Self-Adhesive Pipe Labels: Printed plastic with contact-type, permanent-adhesive backing.

D. Pipe Label Contents: Include identification of piping service using same designations or abbreviations as used on Drawings, pipe size, and an arrow indicating flow direction.

1. Flow-Direction Arrows: Integral with piping system service lettering to accommodate both directions, or as separate unit on each pipe label to indicate flow direction.

2. Lettering Size: At least 1-1/2 inches (38 mm) high.

2.4 STENCILS

A. Stencils: Prepared with letter sizes according to ASME A13.1 for piping; and minimum letter height of 3/4 inch (19 mm) for access panel and door labels, equipment labels, and similar operational instructions.

1. Stencil Material: Aluminum.

2. Stencil Paint: Exterior, gloss, alkyd enamel black unless otherwise indicated. Paint may be in pressurized spray-can form.

3. Identification Paint: Exterior, acrylic enamel in colors according to ASME A13.1 unless otherwise indicated.

2.5 VALVE TAGS

A. Valve Tags: Stamped or engraved with 1/4-inch letters for piping system abbreviation and 1/2-inch numbers.

1. Tag Material: Brass, 0.032-inch (0.8-mm) minimum thickness, and having predrilled or stamped holes for attachment hardware.

2. Fasteners: Brass wire-link or beaded chain; or S-hook.

B. Valve Schedules: For each piping system, on 8-1/2-by-11-inch bond paper. Tabulate valve number, piping system, system abbreviation (as shown on valve tag), location of valve (room or space), normal-operating position (open, closed, or modulating), and variations for identification. Mark valves for emergency shutoff and similar special uses.

1. Valve-tag schedule shall be included in operation and maintenance data.

2.6 WARNING TAGS

A. Warning Tags: Preprinted or partially preprinted, accident-prevention tags, of plasticized card stock with matte finish suitable for writing.

1. Size: Approximately 4 by 7 inches.

2. Fasteners: Brass grommet and wire.

3. Nomenclature: Large-size primary caption such as "DANGER," "CAUTION," or "DO NOT OPERATE."
4. Color: Yellow background with black lettering.

PART 3 - EXECUTION

3.1 PREPARATION

A. Clean piping and equipment surfaces of substances that could impair bond of identification devices, including dirt, oil, grease, release agents, and incompatible primers, paints, and encapsulants.

3.2 EQUIPMENT LABEL INSTALLATION

A. Install or permanently fasten labels on each major item of mechanical equipment.

B. Locate equipment labels where accessible and visible.

3.3 PIPE LABEL INSTALLATION

A. Piping Color-Coding: Painting of piping is specified in Architectural Section “Interior Painting."

B. Stenciled Pipe Label Option: Stenciled labels may be provided instead of manufactured pipe labels, at Installer's option. Install stenciled pipe labels with painted, color-coded bands or rectangles, complying with ASME A13.1, on each piping system.

1. Identification Paint: Use for contrasting background.
2. Stencil Paint: Use for pipe marking.

C. Locate pipe labels where piping is exposed or above accessible ceilings in finished spaces; machine rooms; accessible maintenance spaces such as shafts, tunnels, and plenums; and exterior exposed locations as follows:

1. Near each valve and control device.
2. Near each branch connection, excluding short takeoffs for fixtures and terminal units. Where flow pattern is not obvious, mark each pipe at branch.
3. Near penetrations through walls, floors, ceilings, and inaccessible enclosures.
4. At access doors, manholes, and similar access points that permit view of concealed piping.
5. Near major equipment items and other points of origination and termination.
6. Spaced at maximum intervals of 50 feet along each run. Reduce intervals to 25 feet in areas of congested piping and equipment.
7. On piping above removable acoustical ceilings. Omit intermediately spaced labels.

D. Pipe Label Color Schedule:

1. Domestic Water Piping:
   a. Background Color: Blue
   b. Letter Color: White.

2. Sanitary Waste and Storm Drainage Piping:
    a. Background Color: Black.
    b. Letter Color: Yellow.

3.4 VALVE-TAG INSTALLATION

A. Install tags on valves and control devices in piping systems, except check valves; valves within factory-fabricated equipment units; shutoff valves; faucets; convenience and lawn-watering hose connections; and similar roughing-in connections of end-use fixtures and units. List tagged valves in a valve schedule.

B. Valve-Tag Application Schedule: Tag valves according to size, shape, and color scheme and with captions similar to those indicated in the following subparagraphs:
    1. Valve-Tag Size and Shape:
        a. Cold Water: 2 inches, round.
        b. Hot Water: 2 inches, round.
    2. Valve-Tag Color:
        a. Cold Water: Green.
        b. Hot Water: Green.
    3. Letter Color:
        a. Cold Water: Black.
        b. Hot Water: Black.

3.5 WARNING-TAG INSTALLATION

A. Write required message on, and attach warning tags to, equipment and other items where required.

END OF SECTION

No Text On This Page

SECTION 22 07 19 – PLUMBING PIPING INSULATION – IG/PC

PART 1 - GENERAL

1.1 SUMMARY

A. Section Includes:

1. Insulation Materials:
   a. Flexible elastomeric.
   b. Mineral fiber.
   c. Polyolefin.
2. Insulating cements.
3. Adhesives.
4. Mastics.
5. Sealants.
6. Factory-applied jackets.
7. Field-applied fabric-reinforcing mesh.
8. Field-applied jackets.
9. Tapes.
10. Securements.
11. Corner angles.

1.3 SUBMITTALS

A. Product Data: For each type of product indicated.

B. LEED Submittal:

1. Product Data for Credit EQ 4.1: For adhesives and sealants, including printed statement of VOC content.

C. Shop Drawings:

1. Detail application of protective shields, saddles, and inserts at hangers for each type of insulation and hanger.
2. Detail attachment and covering of heat tracing inside insulation
3. Detail insulation application at pipe expansion joints for each type of insulation.
4. Detail insulation application at elbows, fittings, flanges, valves, and specialties for each type of insulation.
5. Detail removable insulation at piping specialties, equipment connections, and access panels.
6. Detail application of field-applied jackets.
7. Detail application at linkages of control devices.
8. Detail field application for each equipment type.

D. Field quality-control reports.

1.4 QUALITY ASSURANCE

A. Fire-Test-Response Characteristics: Insulation and related materials shall have fire-test response characteristics indicated, as determined by testing identical products per ASTM E 84, by a testing and inspecting agency acceptable to authorities having jurisdiction. Factory label insulation and jacket materials and adhesive, mastic, tapes, and cement material containers, with appropriate markings of applicable testing and inspecting agency.

1. Insulation Installed Indoors: Flame-spread index of 25 or less, and smoke-developed index of 50 or less.
2. Insulation Installed Outdoors: Flame-spread index of 75 or less, and smoke-developed index of 150 or less.

PART 2 - PRODUCTS

2.1 INSULATION MATERIALS

A. Comply with requirements in Part 3 schedule articles for where insulating materials shall be applied.

B. Products shall not contain asbestos, lead, mercury, or mercury compounds.

C. Foam insulation materials shall not use CFC or HCFC blowing agents in the manufacturing process.

D. Mineral-Fiber, Preformed Pipe Insulation:

1. Products: Subject to compliance with requirements, provide one of the following:
   a. Johns Manville; Micro-Lok.
   b. Knauf Insulation; 1000 Pipe Insulation.
   c. Owens Corning; Fiberglas Pipe Insulation.
   d. Or approved equal

2. Type I, 850 deg F Materials: Mineral or glass fibers bonded with a thermosetting resin. Comply with ASTM C 547, Type I, Grade A, with factory-applied ASJ. Factory-applied jacket requirements are specified in "Factory-Applied Jackets" Article.

2.2 INSULATING CEMENTS

A. Mineral-Fiber, Hydraulic-Setting Insulating and Finishing Cement: Comply with ASTM C 449/C 449M.

1. Products: Subject to compliance with requirements, provide one of the following:
   a. Insulco, Division of MFS, Inc.; SmoothKote.
   b. P. K. Insulation Mfg. Co., Inc.; PK No. 127, and Quik-Cote.
   c. Rock Wool Manufacturing Company; Delta One Shot.
   d. Or approved equal

2.3 ADHESIVES

A. Materials shall be compatible with insulation materials, jackets, and substrates and for bonding insulation to itself and to surfaces to be insulated, unless otherwise indicated.

B. Mineral-Fiber Adhesive: Comply with MIL-A-3316C, Class 2, Grade A.

1. Products: Subject to compliance with requirements, provide one of the following:

   a. Childers Products, Division of ITW; CP-82.

   b. Foster Products Corporation, H. B. Fuller Company; 85-20.

   c. ITW TACC, Division of Illinois Tool Works; S-90/80.

   d. Marathon Industries, Inc.; 225.

   e. Mon-Eco Industries, Inc.; 22-25.

   f. Or approved equal

2. For indoor applications, use adhesive that has a VOC content of 80 g/L or less when calculated according to 40 CFR 59, Subpart D (EPA Method 24).

C. ASJ Adhesive, and FSK and PVDC Jacket Adhesive: Comply with MIL-A-3316C, Class 2, Grade A for bonding insulation jacket lap seams and joints.

1. Products: Subject to compliance with requirements, provide one of the following:

   a. Childers Products, Division of ITW; CP-82.

   b. Foster Products Corporation, H. B. Fuller Company; 85-20.

   c. ITW TACC, Division of Illinois Tool Works; S-90/80.

   d. Marathon Industries, Inc.; 225.

   e. Mon-Eco Industries, Inc.; 22-25.

   f. Or approved equal

2. For indoor applications, use adhesive that has a VOC content of 50 g/L or less when calculated according to 40 CFR 59, Subpart D (EPA Method 24).

D. PVC Jacket Adhesive: Compatible with PVC jacket.

1. Products: Subject to compliance with requirements, provide one of the following:

   a. Dow Chemical Company (The); 739, Dow Silicone.

   b. Johns-Manville; Zeston Perma-Weld, CEEL-TITE Solvent Welding Adhesive.

   c. P.I.C. Plastics, Inc.; Welding Adhesive.

   d. Speedline Corporation; Speedline Vinyl Adhesive.

   e. Or approved equal

2. For indoor applications, use adhesive that has a VOC content of 50 g/L or less when calculated according to 40 CFR 59, Subpart D (EPA Method 24).

2.4 MASTICS

A. Materials shall be compatible with insulation materials, jackets, and substrates; comply with MIL-C-19565C, Type II.

1. For indoor applications, use mastics that have a VOC content of 50 g/L or less when calculated according to 40 CFR 59, Subpart D (EPA Method 24).

B. Vapor-Barrier Mastic: Water based; suitable for indoor and outdoor use on below ambient services.

1. Products: Subject to compliance with requirements, provide one of the following:
   a. Childers Products, Division of ITW; CP-35.
   b. Foster Products Corporation, H. B. Fuller Company; 30-90.
   c. ITW TACC, Division of Illinois Tool Works; CB-50.
   d. Marathon Industries, Inc.; 590.
   e. Mon-Eco Industries, Inc.; 55-40.
   f. Or approved equal
2. Water-Vapor Permeance: ASTM E 96, Procedure B, 0.013 perm at 43-mil dry film thickness.
3. Service Temperature Range: Minus 20 to plus 180 deg F.
4. Solids Content: ASTM D 1644, 59 percent by volume and 71 percent by weight.
5. Color: White.

C. Breather Mastic: Water based; suitable for indoor and outdoor use on above ambient services:

1. Products: Subject to compliance with requirements, provide one of the following:
   a. Childers Products, Division of ITW; CP-10.
   b. Foster Products Corporation, H. B. Fuller Company; 35-00.
   c. ITW TACC, Division of Illinois Tool Works; CB-05/15.
   d. Marathon Industries, Inc.; 550.
   e. Mon-Eco Industries, Inc.; 55-50.
   f. Or approved equal
2. Water-Vapor Permeance: ASTM F 1249, 3 perms at 0.0625-inch dry film thickness.
3. Service Temperature Range: Minus 20 to plus 200 deg F.
4. Solids Content: 63 percent by volume and 73 percent by weight.
5. Color: White.

2.5 SEALANTS

A. Joint Sealants:

1. Joint Sealants for Cellular-Glass Products: Subject to compliance with requirements, provide one of the following:
   a. Childers Products, Division of ITW; CP-76.
   b. Foster Products Corporation, H. B. Fuller Company; 30-45.

c. Marathon Industries, Inc.; 405.

d. Mon-Eco Industries, Inc.; 44-05.

e. Or approved equal

B. ASJ Flashing Sealants, and Vinyl, PVDC, and PVC Jacket Flashing Sealants:

1. Products: Subject to compliance with requirements, provide one of the following:

   a. Childers Products, Division of ITW; CP-76.

   b. Or approved equal

2. Materials shall be compatible with insulation materials, jackets, and substrates.

3. Fire- and water-resistant, flexible, elastomeric sealant.

4. Service Temperature Range: Minus 40 to plus 250 deg F.

5. Color: White.

6. For indoor applications, use sealants that have a VOC content of 250 g/L or less when calculated according to 40 CFR 59, Subpart D (EPA Method 24).

2.6 FACTORY-APPLIED JACKETS

A. Insulation system schedules indicate factory-applied jackets on various applications. When factory-applied jackets are indicated, comply with the following:

1. ASJ: White, kraft-paper, fiberglass-reinforced scrim with aluminum-foil backing; complying with ASTM C 1136, Type I.

2. ASJ-SSL: ASJ with self-sealing, pressure-sensitive, acrylic-based adhesive covered by a removable protective strip; complying with ASTM C 1136, Type I.

3. FSK Jacket: Aluminum-foil, fiberglass-reinforced scrim with kraft-paper backing; complying with ASTM C 1136, Type II.

4. PVDC Jacket for Indoor Applications: 4-mil- thick, white PVDC biaxially oriented barrier film with a permeance at 0.02 perms when tested according to ASTM E 96 and with a flame-spread index of 5 and a smoke-developed index of 20 when tested according to ASTM E 84.

   a. Products: Subject to compliance with requirements, provide one of the following:

      1) Dow Chemical Company (The); Saran 540 Vapor Retarder Film and Saran 560 Vapor Retarder Film;

      2) 3M Pipe Insulation;

      3) Armacell LLC;

      4) Or approved equal.

      5. PVDC-SSL Jacket: PVDC jacket with a self-sealing, pressure-sensitive, acrylic-based adhesive covered by a removable protective strip.

         a. Products: Subject to compliance with requirements, provide one of the following:

1) Dow Chemical Company (The); Saran 540 Vapor Retarder Film and Saran 560 Vapor Retarder Film;
2) 3M Pipe Insulation;
3) Armacell LLC;
4) Or approved equal.

2.7 FIELD-APPLIED JACKETS

A. Field-applied jackets shall comply with ASTM C 921, Type I, unless otherwise indicated.

B. PVC Jacket: High-impact-resistant, UV-resistant PVC complying with ASTM D 1784, Class 16354-C; thickness as scheduled; roll stock ready for shop or field cutting and forming Thickness is indicated in field-applied jacket schedules.

1. Products: Subject to compliance with requirements, provide one of the following:
   a. Johns Manville; Zeston.
   b. P.I.C. Plastics, Inc.; FG Series.
   c. Proto PVC Corporation; LoSmoke.
   d. Speedline Corporation; SmokeSafe.
   e. Or approved equal
2. Adhesive: As recommended by jacket material manufacturer.
3. Color: White.

4. Factory-fabricated fitting covers to match jacket if available; otherwise, field fabricate.
   a. Shapes: 45- and 90-degree, short- and long-radius elbows, tees, valves, flanges, unions, reducers, end caps, soil-pipe hubs, traps, mechanical joints, and P-trap and supply covers for lavatories.

2.8 TAPES

A. ASJ Tape: White vapor-retarder tape matching factory-applied jacket with acrylic adhesive, complying with ASTM C 1136.

1. Products: Subject to compliance with requirements, provide one of the following:
   a. Avery Dennison Corporation, Specialty Tapes Division; Fasson 0835.
   b. Compac Corp.; 104 and 105.
   c. Ideal Tape Co., Inc., an American Biltrite Company; 428 AWF ASJ.
   d. Venture Tape; 1540 CW Plus, 1542 CW Plus, and 1542 CW Plus/SQ.
   e. Or approved equal
2. Width: 3 inches.
3. Thickness: 11.5 mils.
4. Adhesion: 90 ounces force/inch in width.
5. Elongation: 2 percent.
6. Tensile Strength: 40 lbf/inch in width.

7. ASJ Tape Disks and Squares: Precut disks or squares of ASJ tape.

B. FSK Tape: Foil-face, vapor-retarder tape matching factory-applied jacket with acrylic adhesive; complying with ASTM C 1136.

1. Products: Subject to compliance with requirements, provide one of the following:
   a. Avery Dennison Corporation, Specialty Tapes Division; Fasson 0827.
   b. Compac Corp.; 110 and 111.
   c. Ideal Tape Co., Inc., an American Biltrite Company; 491 AWF FSK.
   d. Venture Tape; 1525 CW, 1528 CW, and 1528 CW/SQ.
2. Width: 3 inches.
3. Thickness: 6.5 mils.
4. Adhesion: 90 ounces force/inch in width.
5. Elongation: 2 percent.
6. Tensile Strength: 40 lbf/inch in width.
7. FSK Tape Disks and Squares: Precut disks or squares of FSK tape.

C. PVC Tape: White vapor-retarder tape matching field-applied PVC jacket with acrylic adhesive.

Suitable for indoor and outdoor applications.

1. Products: Subject to compliance with requirements, provide one of the following:
   a. Avery Dennison Corporation, Specialty Tapes Division; Fasson 0555.
   b. Compac Corp.; 130.
   c. Ideal Tape Co., Inc., an American Biltrite Company; 370 White PVC tape.
   d. Venture Tape; 1506 CW NS.
   e. Or approved equal
2. Width: 2 inches.
3. Thickness: 6 mils.
4. Adhesion: 64 ounces force/inch in width.
5. Elongation: 500 percent.
6. Tensile Strength: 18 lbf/inch in width.

D. PVDC Tape: White vapor-retarder PVDC tape with acrylic adhesive.

1. Products: Subject to compliance with requirements, provide one of the following:
   a. Dow Chemical Company (The); Saran 540 Vapor Retarder Tape.
   b. 3M Pipe Insulation;
   c. Armacell LLC;
   d. Or approved equal.
2. Width: 3 inches.

3. Film Thickness: 4 mils.
4. Adhesive Thickness: 1.5 mils.
5. Elongation at Break: 145 percent.
6. Tensile Strength: 55 lbf/inch in width.

PART 3 - EXECUTION

3.1 PREPARATION

A. Surface Preparation: Clean and dry surfaces to receive insulation. Remove materials that will adversely affect insulation application.

B. Coordinate insulation installation with the trade installing heat tracing. Comply with requirements for heat tracing that apply to insulation.

C. Mix insulating cements with clean potable water; if insulating cements are to be in contact with stainless-steel surfaces, use demineralized water.

3.2 GENERAL INSTALLATION REQUIREMENTS

A. Install insulation materials, accessories, and finishes with smooth, straight, and even surfaces; free of voids throughout the length of equipment and piping including fittings, valves, and specialties.

B. Install insulation materials, forms, vapor barriers or retarders, jackets, and thicknesses required for each item of equipment and pipe system as specified in insulation system schedules.

C. Install accessories compatible with insulation materials and suitable for the service. Install accessories that do not corrode, soften, or otherwise attack insulation or jacket in either wet or dry state.

D. Install insulation with longitudinal seams at top and bottom of horizontal runs.

E. Install multiple layers of insulation with longitudinal and end seams staggered.

F. Do not weld brackets, clips, or other attachment devices to piping, fittings, and specialties.

G. Keep insulation materials dry during application and finishing.

H. Install insulation with tight longitudinal seams and end joints. Bond seams and joints with adhesive recommended by insulation material manufacturer.

I. Install insulation with least number of joints practical.

J. Where vapor barrier is indicated, seal joints, seams, and penetrations in insulation at hangers, supports, anchors, and other projections with vapor-barrier mastic.

1. Install insulation continuously through hangers and around anchor attachments.
2. For insulation application where vapor barriers are indicated, extend insulation on anchor legs from point of attachment to supported item to point of attachment to structure. Taper and seal ends at attachment to structure with vapor-barrier mastic.

3. Install insert materials and install insulation to tightly join the insert. Seal insulation to insulation inserts with adhesive or sealing compound recommended by insulation material manufacturer.
4. Cover inserts with jacket material matching adjacent pipe insulation. Install shields over jacket, arranged to protect jacket from tear or puncture by hanger, support, and shield.

K. Apply adhesives, mastics, and sealants at manufacturer's recommended coverage rate and wet and dry film thicknesses.

L. Install insulation with factory-applied jackets as follows:

1. Draw jacket tight and smooth.
2. Cover circumferential joints with 3-inch- wide strips, of same material as insulation jacket. Secure strips with adhesive and outward clinching staples along both edges of strip, spaced 4 inches o.c.
3. Overlap jacket longitudinal seams at least 1-1/2 inches. Install insulation with longitudinal seams at bottom of pipe. Clean and dry surface to receive self-sealing lap. Staple laps with outward clinching staples along edge at 2 inches o.c.
   a. For below ambient services, apply vapor-barrier mastic over staples.
4. Cover joints and seams with tape as recommended by insulation material manufacturer to maintain vapor seal.
5. Where vapor barriers are indicated, apply vapor-barrier mastic on seams and joints and at ends adjacent to pipe flanges and fittings.

M. Cut insulation in a manner to avoid compressing insulation more than 75 percent of its nominal thickness.

N. Finish installation with systems at operating conditions. Repair joint separations and cracking due to thermal movement.

O. Repair damaged insulation facings by applying same facing material over damaged areas. Extend patches at least 4 inches beyond damaged areas. Adhere, staple, and seal patches similar to butt joints.

P. For above ambient services, do not install insulation to the following:

1. Vibration-control devices.
2. Testing agency labels and stamps.
3. Nameplates and data plates.
4. Manholes.
5. Handholes.
6. Cleanouts

3.3 PENETRATIONS

A. Insulation Installation at Roof Penetrations: Install insulation continuously through roof penetrations.

1. Seal penetrations with flashing sealant.

2. For applications requiring only indoor insulation, terminate insulation above roof surface and seal with joint sealant. For applications requiring indoor and outdoor insulation, install insulation for outdoor applications tightly joined to indoor insulation ends. Seal joint with joint sealant.
3. Extend jacket of outdoor insulation outside roof flashing at least 2 inches below top of roof flashing.
4. Seal jacket to roof flashing with flashing sealant.

B. Insulation Installation at Underground Exterior Wall Penetrations: Terminate insulation flush with sleeve seal. Seal terminations with flashing sealant.

C. Insulation Installation at Aboveground Exterior Wall Penetrations: Install insulation continuously through wall penetrations.

1. Seal penetrations with flashing sealant.
2. For applications requiring only indoor insulation, terminate insulation inside wall surface and seal with joint sealant. For applications requiring indoor and outdoor insulation, install insulation for outdoor applications tightly joined to indoor insulation ends. Seal joint with joint sealant.
3. Extend jacket of outdoor insulation outside wall flashing and overlap wall flashing at least 2 inches.
4. Seal jacket to wall flashing with flashing sealant.

D. Insulation Installation at Interior Wall and Partition Penetrations (That Are Not Fire Rated): Install insulation continuously through walls and partitions.

E. Insulation Installation at Fire-Rated Wall and Partition Penetrations: Install insulation continuously through penetrations of fire-rated walls and partitions.

1. Comply with requirements in Division 07 Section "Penetration Firestopping" and fire-resistive joint sealers.

F. Insulation Installation at Floor Penetrations:

1. Pipe: Install insulation continuously through floor penetrations.
2. Seal penetrations through fire-rated assemblies. Comply with requirements in Division 07 Section "Penetration Firestopping."

3.4 GENERAL PIPE INSULATION

A. Requirements in this article generally apply to all insulation materials except where more specific requirements are specified in various pipe insulation material installation articles.

B. Insulation Installation on Fittings, Valves, Strainers, Flanges, and Unions:

1. Install Insulation over fittings, valves, strainers, flanges, unions, and other specialties with continuous thermal and vapor-retarder integrity, unless otherwise indicated.
2. Insulate pipe elbows using preformed fitting insulation or mitered fittings made from same material and density as adjacent pipe insulation. Each piece shall be butted tightly against adjoining piece and bonded with adhesive. Fill joints, seams, voids, and irregular surfaces with insulating cement finished to a smooth, hard, and uniform contour that is uniform with adjoining pipe insulation.

3. Insulate tee fittings with preformed fitting insulation or sectional pipe insulation of same material and thickness as used for adjacent pipe. Cut sectional pipe insulation to fit. Butt each section closely to the next and hold in place with tie wire. Bond pieces with adhesive.
4. Insulate valves using preformed fitting insulation or sectional pipe insulation of same material, density, and thickness as used for adjacent pipe. Overlap adjoining pipe insulation by not less than two times the thickness of pipe insulation, or one pipe diameter, whichever is thicker. For valves, insulate up to and including the bonnets, valve stuffing-box studs, bolts, and nuts. Fill joints, seams, and irregular surfaces with insulating cement.
5. Insulate strainers using preformed fitting insulation or sectional pipe insulation of same material, density, and thickness as used for adjacent pipe. Overlap adjoining pipe insulation by not less than two times the thickness of pipe insulation, or one pipe diameter, whichever is thicker. Fill joints, seams, and irregular surfaces with insulating cement. Insulate strainers so strainer basket flange or plug can be easily removed and replaced without damaging the insulation and jacket. Provide a removable reusable insulation cover. For below ambient services, provide a design that maintains vapor barrier.
6. Insulate flanges and unions using a section of oversized preformed pipe insulation.

   Overlap adjoining pipe insulation by not less than two times the thickness of pipe insulation, or one pipe diameter, whichever is thicker.
7. Cover segmented insulated surfaces with a layer of finishing cement and coat with a mastic. Install vapor-barrier mastic for below ambient services and a breather mastic for above ambient services. Reinforce the mastic with fabric-reinforcing mesh. Trowel the mastic to a smooth and well-shaped contour.
8. For services not specified to receive a field-applied jacket except for flexible elastomeric and polyolefin, install fitted PVC cover over elbows, tees, strainers, valves, flanges, and unions. Terminate ends with PVC end caps. Tape PVC covers to adjoining insulation facing using PVC tape.
9. Stencil or label the outside insulation jacket of each union with the word "UNION." Match size and color of pipe labels.

C. Insulate instrument connections for thermometers, pressure gages, pressure temperature taps, test connections, flow meters, sensors, switches, and transmitters on insulated pipes, vessels, and equipment. Shape insulation at these connections by tapering it to and around the connection with insulating cement and finish with finishing cement, mastic, and flashing sealant.

D. Install removable insulation covers at locations indicated. Installation shall conform to the following:

1. Make removable flange and union insulation from sectional pipe insulation of same thickness as that on adjoining pipe. Install same insulation jacket as adjoining pipe insulation.
2. When flange and union covers are made from sectional pipe insulation, extend insulation from flanges or union long at least two times the insulation thickness over adjacent pipe insulation on each side of flange or union. Secure flange

cover in place with stainless steel or aluminum bands. Select band material compatible with insulation and jacket.

3. Construct removable valve insulation covers in same manner as for flanges except divide the two-part section on the vertical center line of valve body

4. When covers are made from block insulation, make two halves, each consisting of mitered blocks wired to stainless-steel fabric. Secure this wire frame, with its attached insulation, to flanges with tie wire. Extend insulation at least 2 inches over adjacent pipe insulation on each side of valve. Fill space between flange or union cover and pipe insulation with insulating cement. Finish cover assembly with insulating cement applied in two coats. After first coat is dry, apply and trowel second coat to a smooth finish.

5. Unless a PVC jacket is indicated in field-applied jacket schedules, finish exposed surfaces with a metal jacket.

3.5 MINERAL-FIBER INSULATION INSTALLATION

A. Insulation Installation on Straight Pipes and Tubes:

1. Secure each layer of preformed pipe insulation to pipe with wire or bands and tighten bands without deforming insulation materials.

2. Where vapor barriers are indicated, seal longitudinal seams, end joints, and protrusions with vapor-barrier mastic and joint sealant.

3. For insulation with factory-applied jackets on above ambient surfaces, secure laps with outward clinched staples at 6 inches o.c.

4. For insulation with factory-applied jackets on below ambient surfaces, do not staple longitudinal tabs but secure tabs with additional adhesive as recommended by insulation material manufacturer and seal with vapor-barrier mastic and flashing sealant.

B. Insulation Installation on Pipe Flanges:

1. Install preformed pipe insulation to outer diameter of pipe flange.

2. Make width of insulation section same as overall width of flange and bolts, plus twice the thickness of pipe insulation.

3. Fill voids between inner circumference of flange insulation and outer circumference of adjacent straight pipe segments with mineral-fiber blanket insulation.

4. Install jacket material with manufacturer's recommended adhesive, overlap seams at least 1 inch, and seal joints with flashing sealant.

C. Insulation Installation on Pipe Fittings and Elbows:

1. Install preformed sections of same material as straight segments of pipe insulation when available.

2. When preformed insulation elbows and fittings are not available, install mitered sections of pipe insulation, to a thickness equal to adjoining pipe insulation. Secure insulation materials with wire or bands.

D. Insulation Installation on Valves and Pipe Specialties:

1. Install preformed sections of same material as straight segments of pipe insulation when available.
2. When preformed sections are not available, install mitered sections of pipe insulation to valve body.
3. Arrange insulation to permit access to packing and to allow valve operation without disturbing insulation.
4. Install insulation to flanges as specified for flange insulation application.

3.6 FIELD-APPLIED JACKET INSTALLATION

A. Where FSK jackets are indicated, install as follows:

1. Draw jacket material smooth and tight.
2. Install lap or joint strips with same material as jacket.
3. Secure jacket to insulation with manufacturer's recommended adhesive.
4. Install jacket with 1-1/2-inch laps at longitudinal seams and 3-inch- wide joint strips at end joints.
5. Seal openings, punctures, and breaks in vapor-retarder jackets and exposed insulation with vapor-barrier mastic.

B. Where PVC jackets are indicated, install with 1-inch overlap at longitudinal seams and end joints; for horizontal applications, install with longitudinal seams along top and bottom of tanks and vessels. Seal with manufacturer's recommended adhesive.

1. Apply two continuous beads of adhesive to seams and joints, one bead under lap and the finish bead along seam and joint edge.

C. Where metal jackets are indicated, install with 2-inch overlap at longitudinal seams and end joints. Overlap longitudinal seams arranged to shed water. Seal end joints with weatherproof sealant recommended by insulation manufacturer. Secure jacket with stainless-steel bands 12 inches o.c. and at end joints.

D. Where PVDC jackets are indicated, install as follows:

1. Apply three separate wraps of filament tape per insulation section to secure pipe insulation to pipe prior to installation of PVDC jacket.
2. Wrap factory-presized jackets around individual pipe insulation sections with one end overlapping the previously installed sheet. Install presized jacket with an approximate overlap at butt joint of 2 inches over the previous section. Adhere lap seal using adhesive or SSL, and then apply 1-1/4 circumferences of appropriate PVDC tape around overlapped butt joint.
3. Continuous jacket can be spiral wrapped around a length of pipe insulation. Apply adhesive or PVDC tape at overlapped spiral edge. When electing to use adhesives, refer to manufacturer's written instructions for application of adhesives along this spiral edge to maintain a permanent bond.
4. Jacket can be wrapped in cigarette fashion along length of roll for insulation systems with an outer circumference of 33-1/2 inches or less. The 33-1/2-inch-circumference limit allows for 2-inch- overlap seal. Using the length of roll allows for longer sections of jacket to be installed at one time. Use adhesive on the lap

seal. Visually inspect lap seal for "fishmouthing," and use PVDC tape along lap seal to secure joint.

5. Repair holes or tears in PVDC jacket by placing PVDC tape over the hole or tear and wrapping a minimum of 1-1/4 circumferences to avoid damage to tape edges.

3.7 FINISHES

A. Equipment and Pipe Insulation with ASJ or Other Paintable Jacket Material: Paint jacket with paint system identified below and as specified in Division 09 painting Sections.

1. Flat Acrylic Finish: Two finish coats over a primer that is compatible with jacket material and finish coat paint. Add fungicidal agent to render fabric mildew proof.

a. Finish Coat Material: Interior, flat, latex-emulsion size.

B. Flexible Elastomeric Thermal Insulation: After adhesive has fully cured, apply two coats of insulation manufacturer's recommended protective coating.

C. Color: Final color as selected by Engineer. Vary first and second coats to allow visual inspection of the completed Work.

D. Do not field paint aluminum or stainless-steel jackets.

3.8 FIELD QUALITY CONTROL

A. Perform tests and inspections.

B. Tests and Inspections:

1. Inspect pipe, fittings, strainers, and valves, randomly selected by Engineer, by removing field-applied jacket and insulation in layers in reverse order of their installation. Extent of inspection shall be limited to three locations of straight pipe, three locations of threaded fittings, three locations of welded fittings, two locations of threaded strainers, locations of welded strainers, locations of threaded valves, and locations of flanged valves for each pipe service defined in the "Piping Insulation Schedule, General" Article.

C. All insulation applications will be considered defective Work if sample inspection reveals noncompliance with requirements.

3.9 PIPING INSULATION SCHEDULE, GENERAL

A. Acceptable preformed pipe and tubular insulation materials and thicknesses are identified for each piping system and pipe size range. If more than one material is listed for a piping system, selection from materials listed is Contractor's option.

B. Items Not Insulated: Unless otherwise indicated, do not install insulation on the following:

1. Underground piping.

3.10 INDOOR PIPING INSULATION SCHEDULE

A. Domestic Cold and Non-potable Cold Water: Insulation shall be one of the following:

1. Mineral-Fiber, Preformed Pipe Insulation, Type I: 1/2 inch thick for pipe sizes less than 1- 1/2 inches, 1 inch thick for pipe sizes 2 inches and greater

END OF SECTION

SECTION 22 11 16 – DOMESTIC WATER PIPING – IG/PC

PART 1 – GENERAL

RELATED DOCUMENTS

A. Section 22 05 17 - SLEEVS AND SLEEVE SEALS FOR PLUMBING PIPING

B. Section 22 05 23 - GENERAL DUTY VALVES FOR PLUMBING PIPING

C. Section 22 05 53 – IDENTIFICATION FOR PLUMBING PIPING AND EQUIPMNET.

D. Section 22 07 19 – PLUMBING PIPING INSULATION.

E. Section 22 11 19 – DOMESTIC WATER PIPING SPECIALTIES.

1.1 SUMMARY

A. Section Includes:

1. Aboveground domestic water pipes, tubes, and fittings inside buildings.

B. Related Requirements:

1. Wet Connection – 4”

2. Ductile Iron Cement Lined Water Pipe – 4”

1.2 SUBMITTALS

A. Product Data: Piping material, type of connections, transition fittings and dielectric fittings.

B. System purging and disinfecting activities report.

C. Field quality-control reports.

PART 2 – PRODUCTS

2.1 PIPING MATERIALS

A. Comply with requirements in "Piping Schedule" Article for applications of pipe, tube, fitting materials, and joining methods for specific services, service locations, and pipe sizes.

B. Potable-water piping and components shall comply with NSF 14 and NSF 61. Plastic piping components shall be marked with "NSF-pw."

2.01 STEEL PIPE AND FITTINGS

A. Steel Pipe for Threading: Standard weight, Schedule 40, black or galvanized; ASTM A 53 or ASTM A 135.

B. Malleable Iron, Steam Pattern Threaded Fittings:

1. 150 lb Class: ASME B16.3.

2. 300 lb Class: ASME B16.3.

C. Cast Iron Fittings:

1. Drainage Pattern, Threaded: ASME B16.12.

2. Steam Pattern, Threaded: ASME B16.4.
   a. Standard Weight: Class 125.
   b. Extra Heavy Weight: Class 250.
3. Flanged Fittings and Threaded Flanges: ASME B16.1.
   a. Standard Weight: Class 125.
   b. Extra Heavy: Class 250.

D. Unions: Malleable iron, 250 lb class, brass to iron or brass to brass seats.

E. Couplings: Same material and pressure rating as adjoining pipe, conforming to standards for fittings in such pipe. Use taper tapped threaded type in screwed pipe systems operating in excess of 15 psig.

F. Nipples: Same material and strength as adjoining pipe, except nipples having a length of less than one inch between threads shall be extra heavy.

2.2 COPPER TUBE AND FITTINGS

A. Hard Copper Tube: ASTM B 88, Type K, L and M water tube, drawn temper.

B. Cast-Copper, Solder-Joint Fittings: ASME B16.18, pressure fittings.

C. Wrought-Copper, Solder-Joint Fittings: ASME B16.22, wrought-copper pressure fittings.

D. Flared-Joint Fittings: ASME B16.26, Cast Copper Alloy Fittings for Fared Copper Tubes

E. Copper Unions:
   1. MSS SP-123.
   2. Cast-copper-alloy, hexagonal-stock body.
   3. Ball-and-socket, metal-to-metal seating surfaces.
   4. Solder-joint or threaded ends.

2.3 DUCTILE IRON PIPE AND FITTINGS

A. Water Pipe: Bitumin coated and cement-mortar lined; AWWA C151.
   1. 3 and 4 Inch Sizes: Class 51.

B. Fittings: Bitumin coated and cement-mortar lined; AWWA C110.

2.4 PIPING JOINING MATERIALS

A. Solder Filler Metals: ASTM B 32, lead-free alloys.

B. Flux: ASTM B 813, water flushable.

C. Braze Filler Metal: AWS A5.8

2.5 TRANSITION FITTINGS

A. General Requirements:
   1. Same size as pipes to be joined.
   2. Pressure rating at least equal to pipes to be joined.

3. End connections compatible with pipes to be joined.

B. Fitting-Type Transition Couplings: Manufactured piping coupling or specified piping system fitting.

C. Sleeve-Type Transition Coupling: AWWA C219.

1. Manufacturers: Subject to compliance with requirements, provide products by the following:

a. Cascade Waterworks Manufacturing.

b. Dresser, Inc.; Piping Specialties Products.

c. Ford Meter Box Company, Inc. (The).

d. JCM Industries.

e. Romac Industries, Inc.

f. Smith-Blair, Inc.; a Sensus company.

g. Viking Johnson.

h. Or approved equal.

2.6 DIELECTRIC FITTINGS

A. General Requirements:Assembly of copper alloy and ferrous materials with separating nonconductive insulating material. Include end connections compatible with pipes to be joined.

B. Dielectric Unions:

1. Manufacturers: Subject to compliance with requirements, provide products by the following:

a. Capitol Manufacturing Company; member of the Phoenix Forge Group.

b. Central Plastics Company.

c. Hart Industries International, Inc.

d. Jomar International.

e. Matco-Norca.

f. McDonald, A. Y. Mfg. Co.

g. Watts; a division of Watts Water Technologies, Inc.

h. Wilkins; a Zurn company.

i. Or approved equal.

2. Standard: ASSE 1079.

3. Pressure Rating: 250 psig (1725 kPa)

4. End Connections: Solder-joint copper alloy and threaded ferrous.

C. Dielectric Flanges:

1. Manufacturers: Subject to compliance with requirements, provide products by the following:

2. Approved Manufacturers: Subject to compliance with requirements, provide product indicated on Drawings or comparable product by one of the following:
    a. Capitol Manufacturing Company; member of the Phoenix Forge Group.
    b. Central Plastics Company.
    c. Matco-Norca.
    d. Watts; a division of Watts Water Technologies, Inc.
    e. Wilkins; a Zurn company.
    f. Or approved equal.
3. Standard: ASSE 1079.
4. Factory-fabricated, bolted, companion-flange assembly.
5. Pressure Rating: 175 psig (1200 kPa).
6. End Connections: Solder-joint copper alloy and threaded ferrous; threaded solder-joint copper alloy and threaded ferrous.

D. Dielectric-Flange Insulating Kits:
1. Manufacturers: Subject to compliance with requirements, provide products by the following:
    a. Advance Products & Systems, Inc.
    b. Calpico, Inc.
    c. Central Plastics Company.
    d. Pipeline Seal and Insulator, Inc.
    e. Or approved equal.
3. Nonconducting materials for field assembly of companion flanges.
4. Pressure Rating: 150 psig (1035 kPa).
5. Gasket: Neoprene or phenolic.
6. Bolt Sleeves: Phenolic or polyethylene.
7. Washers: Phenolic with steel backing washers.

E. Dielectric Nipples:
1. Manufacturers: Subject to compliance with requirements, provide products by the following:
    a. Elster Perfection Corporation.
    b. Grinnell Mechanical Products; Tyco Fire Products LP.
    c. Matco-Norca.
    d. Precision Plumbing Products, Inc.
    e. Victaulic Company.
    f. Or approved equal.
3. Standard: IAPMO PS 66.

4. Electroplated steel nipple complying with ASTM F 1545.
5. Pressure Rating and Temperature: 300 psig at 225 deg F.
6. End Connections: Male threaded or grooved.
7. Lining: Inert and noncorrosive, propylene.

PART 3 - EXECUTION

3.1 PIPING INSTALLATION

A. Drawing plans, schematics, and diagrams indicate general location and arrangement of domestic water piping. Indicated locations and arrangements are used to size pipe and calculate friction loss, expansion, and other design considerations. Install piping as indicated unless deviations to layout are approved on coordination drawings.

B. Install copper tubing under building slab according to CDA's "Copper Tube Handbook."

C. Install shutoff valve, hose-end drain valve, strainer, pressure gage, and test tee with valve inside the building at each domestic water-service entrance. Comply with requirements for pressure gages in Section 220519 "Meters and Gages for Plumbing Piping" and with requirements for drain valves and strainers in Section 221119 "Domestic Water Piping Specialties."

D. Install shutoff valve immediately upstream of each dielectric fitting.

E. Install water-pressure-reducing valves downstream from shutoff valves. Comply with requirements for pressure-reducing valves in Section 22 11 19 "Domestic Water Piping Specialties."

F. Install domestic water piping level without pitch and plumb.

G. Rough-in domestic water piping for water-meter installation according to utility company's requirements.

H. Install piping concealed from view and protected from physical contact by building occupants unless otherwise indicated and except in equipment rooms and service areas.

I. Install piping indicated to be exposed and piping in equipment rooms and service areas at right angles or parallel to building walls. Diagonal runs are prohibited unless specifically indicated otherwise.

J. Install piping above accessible ceilings to allow sufficient space for ceiling panel removal, and coordinate with other services occupying that space.

K. Install piping to permit valve servicing.

L. Install nipples, unions, special fittings, and valves with pressure ratings the same as or higher than the system pressure rating used in applications below unless otherwise indicated.

M. Install piping free of sags and bends.

N. Install fittings for changes in direction and branch connections.

O. Install unions in copper tubing at final connection to each piece of equipment, machine, and specialty.

P. Install pressure gages on suction and discharge piping for each plumbing pump and packaged booster pump. Comply with requirements for pressure gages in Section 220519 "Meters and Gages for Plumbing Piping."

Q. Install thermometers on inlet and outlet piping from each water heater. Comply with requirements for thermometers in Section 220519 "Meters and Gages for Plumbing Piping."

R. Install sleeves for piping penetrations of walls, ceilings, and floors. Comply with requirements for sleeves specified in Section 220517 "Sleeves and Sleeve Seals for Plumbing Piping."

S. Install sleeve seals for piping penetrations of concrete walls and slabs. Comply with requirements for sleeve seals specified in Section 220517 "Sleeves and Sleeve Seals for Plumbing Piping."

T. Install escutcheons for piping penetrations of walls, ceilings, and floors. Comply with requirements for escutcheons specified in Section 220518 "Escutcheons for Plumbing Piping."

3.3 JOINT CONSTRUCTION

A. Ream ends of pipes and tubes and remove burrs. Bevel plain ends of steel pipe.

B. Remove scale, slag, dirt, and debris from inside and outside of pipes, tubes, and fittings before assembly.

C. Brazed Joints: All joint surface shall be cleaned. An approved flux shall be applied where required. The joint shall be brazed with a filter metal conforming to AWS A5.8.

D. Soldered Joints: Solder joints shall be made in accordance with the methods of ASTM B 828. All cut tube ends shall be reamed to the full inside diameter of the tube end. All joints surface shall be cleaned. A flux conforming to ASTM B 813 shall be applied. The joint shall be soldered with a solder conforming to ASTM B 32. The joining of water supply piping shall made with lead-free solders and flux. ”Lead-free” shall mean a chemical composition equal to or less than 0.2 percent lead.

E. Mechanical joints: Mechanical joints for copper shall be installed in accordance with the manufacturer’s instructions and shall be tested, designed and evaluated in accordance with IAPMO PS ICCES, ICC-ES PMG LC and ASSE 1061

F. Flared Joints: Flared joints for water pipe shall be made by a tool designed for that operation. Join copper tube and pressure-seal fittings with tools recommended by fitting manufacturer.

G. Joints for Dissimilar-Material Piping: Make joints using adapters compatible with materials of both piping systems.

H. Join copper tube and fittings according to ASTM B 828 or CDA's "Copper Tube Handbook."

3.4 TRANSITION FITTING INSTALLATION

A. Install transition couplings at joints of dissimilar piping.

B. Transition Fittings in Underground Domestic Water Piping:

1. Fittings for NPS 1-1/2 and Smaller: Fitting-type coupling.

2. Fittings for NPS 2 and Larger: Sleeve-type coupling.

C. Transition Fittings in Aboveground Domestic Water Piping NPS 2 and Smaller.

3.5 DIELECTRIC FITTING INSTALLATION

A. Install dielectric fittings in piping at connections of dissimilar metal piping and tubing.

B. Dielectric Fittings for NPS 2 and Smaller: Use dielectric couplings.

C. Dielectric Fittings for NPS 2-1/2 to NPS 4: Use dielectric nipples.

D. Dielectric Fittings for NPS 5 and Larger: Use dielectric flange kits.

3.6 HANGER AND SUPPORT INSTALLATION

A. Comply with requirements for pipe hanger, support products, and installation in Section 220529 "Hangers and Supports for Plumbing Piping and Equipment."

1. Vertical Piping: MSS Type 8 or 42, clamps.

2. Individual, Straight, Horizontal Piping Runs:

a. 100 Feet and Less: MSS Type 1, adjustable, steel clevis hangers.

b. Longer Than 100 Feet: MSS Type 43, adjustable roller hangers.

c. Longer than 100 Feet if indicated: MSS Type 49, spring cushion rolls.

3. Multiple, Straight, Horizontal Piping Runs 100 Feet or Longer: MSS Type 44, pipe rolls. Support pipe rolls on trapeze.

4. Base of Vertical Piping: MSS Type 52, spring hangers.

B. Support vertical piping and tubing at base and at each floor.

C. Rod diameter may be reduced one size for double-rod hangers, to a minimum of 3/8 inch.

D. Install hangers for copper tubing with the following maximum horizontal spacing and minimum rod diameters:

1. NPS 3/4 and smaller: 60 inches with 3/8-inch rod.

2. NPS 1 and NPS 1-1/4 : 72 inches with 3/8-inch rod.

3. NPS 1-1/2 and NPS 2: 96 inches with 3/8-inch rod.

4. NPS 2-1/2: 108 inches with 1/2-inch rod.

5. NPS 3 to NPS 5: 10 feet with 1/2-inch rod.

6. NPS 6: 10 feet with 5/8-inch rod.

7. NPS 8: 10 feet with 3/4-inch rod.

E. Install supports for vertical copper tubing every 10 feet.

F. Install supports for vertical steel piping every 15 feet.

3.7 CONNECTIONS

A. Drawings indicate general arrangement of piping, fittings, and specialties.

B. When installing piping adjacent to equipment and machines, allow space for service and maintenance.

C. Connect domestic water piping to exterior water-service piping. Use transition fitting to join dissimilar piping materials.

D. Connect domestic water piping to water-service piping with shutoff valve; extend and connect to the following:

1. Water Booster Pumps: Cold-water suction and discharge piping.

3.8 IDENTIFICATION

A. Identify system components. Comply with requirements for identification materials and installation in Section 220553 "Identification for Plumbing Piping and Equipment."

B. Label pressure piping with system operating pressure.

3.9 FIELD QUALITY CONTROL

A. Perform the following tests and inspections:

1. Piping Inspections:

a. Do not enclose, cover, or put piping into operation until it has been inspected and approved by authorities having jurisdiction.

b. During installation, notify the Engineer at least one day before inspection must be made. Perform tests specified below in presence of authorities having jurisdiction:

1) Roughing-in Inspection: Arrange for inspection of piping before concealing or closing in after roughing in and before setting fixtures.

2) Final Inspection: Arrange for the Engineer to observe tests specified in "Piping Tests" Subparagraph below and to ensure compliance with requirements.

c. Reinspection: If the Engineer finds that piping will not pass tests or inspections, make required corrections and arrange for reinspection.

d. Reports: Prepare inspection reports and have them signed by the Engineer.

2. Piping Tests:

a. Fill domestic water piping. Check components to determine that they are not air bound and that piping is full of water.

b. Test for leaks and defects in new piping and parts of existing piping that have been altered, extended, or repaired. If testing is performed in segments, submit a separate report for each test, complete with diagram of portion of piping tested.

c. Leave new, altered, extended, or replaced domestic water piping uncovered and unconcealed until it has been tested and approved. Expose work that was covered

or concealed before it was tested.

d. Cap and subject piping to static water pressure of 50 psig above operating pressure, without exceeding pressure rating of piping system materials. Isolate test source and allow it to stand for four hours. Leaks and loss in test pressure constitute defects that must be repaired.

e. Repair leaks and defects with new materials, and retest piping or portion thereof until satisfactory results are obtained.

f. Prepare reports for tests and for corrective action required.

B. Domestic water piping will be considered defective if it does not pass tests and inspections.

C. Prepare test and inspection reports.

3.10 ADJUSTING

A. Perform the following adjustments before operation:

1. Close drain valves, hydrants, and hose bibbs.

2. Open shutoff valves to fully open position.

3. Open throttling valves to proper setting.

4. Adjust balancing valves in hot-water-circulation return piping to provide adequate flow.

a. Manually adjust ball-type balancing valves in hot-water-circulation return piping to provide hot-water flow in each branch.

b. Adjust calibrated balancing valves to flows indicated.

5. Remove plugs used during testing of piping and for temporary sealing of piping during installation.

6. Remove and clean strainer screens. Close drain valves and replace drain plugs.

7. Remove filter cartridges from housings and verify that cartridges are as specified for application where used and are clean and ready for use.

8. Check plumbing specialties and verify proper settings, adjustments, and operation.

3.11 CLEANING

A. Clean and disinfect potable domestic water piping as follows:

1. Purge new piping and parts of existing piping that have been altered, extended, or repaired before using.

2. Use purging and disinfecting procedures prescribed by authorities having jurisdiction; if methods are not prescribed, use procedures described in either AWWA C651 or AWWA C652 or follow procedures described below:

a. Flush piping system with clean, potable water until dirty water does not appear at outlets.

b. Fill and isolate system according to either of the following:

1) Fill system or part thereof with water/chlorine solution with at least 50 ppm of chlorine. Isolate with valves and allow to stand for 24 hours.

2) Fill system or part thereof with water/chlorine solution with at least 200 ppm of chlorine. Isolate and allow to stand for three hours.

c. Flush system with clean, potable water until no chlorine is in water coming from system after the standing time.

d. Repeat procedures if biological examination shows contamination.

e. Submit water samples in sterile bottles to authorities having jurisdiction.

B. Clean non-potable domestic water piping as follows:

1. Purge new piping and parts of existing piping that have been altered, extended, or repaired before using.

2. Use purging procedures prescribed by authorities having jurisdiction or; if methods are not prescribed, follow procedures described below:

a. Flush piping system with clean, potable water until dirty water does not appear at outlets.

b. Submit water samples in sterile bottles to authorities having jurisdiction. Repeat procedures if biological examination shows contamination.

C. Prepare and submit reports of purging and disinfecting activities. Include copies of water- sample approvals from authorities having jurisdiction.

D. Clean interior of domestic water piping system. Remove dirt and debris as work progresses.

3.12 PIPING SCHEDULE

A. Transition and special fittings with pressure ratings at least equal to piping rating may be used in applications below unless otherwise indicated.

B. Flanges and unions may be used for aboveground piping joints unless otherwise indicated.

C. Fitting Option: Extruded-tee connections, 95/5 Lead Free Soldered Joints and brazed joints may be used on aboveground copper tubing.

E. Under-building-slab, domestic water, building-service piping, NPS 4 and larger, shall be one of the following:

1. Ductile Iron cement lined water pipe

E. Aboveground domestic water piping, NPS 2 and smaller, shall be one of the following:

1. Hard copper tube, ASTM B 88, Type K cast- or wrought-copper, solder-joint fittings; and brazed joints or 95/5 Lead Free Soldered Joints.

F. Aboveground domestic water piping, NPS 2-1/2 to NPS 4, shall be one of the following:

1. Hard copper tube, ASTM B 88, Type K; cast or wrought copper, solder-joint fittings; and brazed joints or 95/5 Lead Free Soldered Joints.

G. Aboveground not potable water piping, NPS 4 shall be one of the following:

1. Steel Pipe for Threading: Standard weight, Schedule 40, black or galvanized; ASTM A 53 or ASTM A 135.

END OF SECTION

SECTION 22 11 19 – DOMESTIC WATER PIPING SPECIALTIES – IG/PC

PART 1 - GENERAL

1.1 SUMMARY

A. Section Includes:

1. Backflow preventers.
2. Strainers.
3. Hose bibbs.
4. Drain valves.
5. Water-hammer arresters.
6. Flexible connectors.
7. Domestic Booster Pump.

B. Related Requirements:

1. Section 22 05 19 "Meters and Gages for Plumbing Piping" for thermometers, pressure gages, and flow meters in domestic water piping.
2. Section 22 11 16 "Domestic Water Piping" for water meters.
3. Comply with requirements for ground equipment in Section 260526 "Grounding and Bonding for Electrical Systems."
4. Fire-retardant-treated-wood blocking is specified in Section 260519 "Low-Voltage Electrical Power Conductors and Cables" for electrical connections.
5. Section 06 10 00 "Rough Carpentry."

1.2 SUBMITTALS

A. Product Data: For each type of product.

B. Shop Drawings: For domestic water piping specialties.

1. Include diagrams for power, signal, and control wiring.

C. Field quality-control reports.

D. Operation and Maintenance Data: For domestic water piping specialties to include in emergency, operation, and maintenance manuals.

PART 2 - PRODUCTS

2.1 GENERAL REQUIREMENTS FOR PIPING SPECIALTIES

A. Potable-water piping and components shall comply with NSF 61 and NSF 14

2.2 PERFORMANCE REQUIREMENTS

A. Minimum Working Pressure for Domestic Water Piping Specialties: 200 psig unless otherwise indicated.

2.3 BACKFLOW PREVENTERS

A. Reduced-Pressure-Principle Backflow Preventers:

1. The Reduced Pressure Zone Backflow Prevention Device shall consist of two independently operating check valves and one hydraulically dependent differential relief valve. Check valve and relief valve components shall be constructed so they may be serviced without removing the valve body from the line.

2. All RPZ's shall be furnished and installed complete with resilient seated shut off valves and test cocks. The assembly shall meet the requirements of ASSE Standard 1013 and AWWA Standard Code 506-78 and shall be lead free in compliance with the amended Federal Law (SDWA).

3. The 3" RPZs and larger shall be manufactured by Febco model LF860 Wilkins, Watts or approved equal. The RPZ shall be installed as shown on the Approved Drawings.

   EFFECTIVE JAN. 4TH, 2014, ALL PROPOSED INSTALLATIONS/ REPAIR OF BACK FLOW PREVENTER (BFP) DEVICES AND ALL ASSOCIATED VALVES TO BE UTILIZED ON ALL DOMESTIC DRINKING WATER SERVICES FOR HUMAN CONSUMPTION, MUST BE LEAD-FREE IN COMPLIANCE WITH THE AMENDED FEDERAL LAW, SAFE DRINKING WATER ACT (SDWA).

   Note: If the Contractor installs equipment Other than that approved by the Cross Connection Control Unit of DEP, it will be the Contractors responsibility to refile and obtain the required approvals at his/her own expense and at no additional cost to the City.

2.4 WATER METERS

A. Water meter shall be "evoQ4 Electronic Meter" with Scancoder emulation manufactured by Elster AMCO Water, LLC, Ocala, FL or "Omni C2" with full electronic register manufactured by Sensus, Raleigh, NC, or approved equal.

B. Meter shall be of the size shown on the NYC DEP approved plans. Only meters on the current "List of Approved Water Meters and Related Equipment", published by NYC DEP will be accepted as an approved equal.

C. The installation of water meters shall comply with RCNY Title 15, Chapter 20, "Rules and Regulations Governing and Restricting the Use and Supply of Water".

2.5 HOSE BIBBS

A. Hose Bibbs:

1. Standard: ASME A112.18.1 for sediment faucets.
2. Body Material: Bronze.
3. Seat: Bronze, replaceable.
4. Supply Connections: NPS 1/2 or NPS 3/4 threaded or solder-joint inlet.
5. Outlet Connection: Garden-hose thread complying with ASME B1.20.7.
6. Pressure Rating: 125 psig.
7. Vacuum Breaker: Integral nonremovable, drainable, hose-connection vacuum breaker complying with ASSE 1011.

8. Finish for Equipment Rooms: Rough bronze, or chrome or nickel plated.
9. Finish for Service Areas: Rough bronze.
10. Finish for Finished Rooms: Chrome or nickel plated.
11. Operation for Equipment Rooms: Wheel handle or operating key.
12. Operation for Service Areas: Operating key.
13. Operation for Finished Rooms: Operating key.
14. Include operating key with each operating-key hose bibbs.
15. Include integral wall flange with each chrome- or nickel-plated hose bibb

PART 3 - EXECUTION

3.1 INSTALLATION

A. Install backflow preventers in each water supply to mechanical equipment and systems and to other equipment and water systems that may be sources of contamination. Comply with authorities having jurisdiction.

1. Locate backflow preventers in same room as connected equipment or system.
2. Install drain for backflow preventers with atmospheric-vent drain connection with air-gap fitting, fixed air-gap fitting, or equivalent positive pipe separation of at least two pipe diameters in drain piping and pipe-to-floor drain. Locate air-gap device attached to or under backflow preventer. Simple air breaks are unacceptable for this application.
3. Do not install bypass piping around backflow preventers.

3.2 CONNECTIONS

A. Comply with requirements for ground equipment in Section 260526 "Grounding and Bonding for Electrical Systems."

3.3 LABELING AND IDENTIFYING

A. Equipment Nameplates and Signs: Install engraved plastic-laminate equipment nameplate or sign on or near each of the following:

1. Reduced-pressure-principle backflow preventers.
2. House valve.
3. Meter Inlet Control Valve.
4. Meter Outlet Control Valve

B. Distinguish among multiple units, inform operator of operational requirements, indicate safety and emergency precautions, and warn of hazards and improper operations, in addition to identifying unit. Nameplates and signs are specified in Section 22 05 53 "Identification for Plumbing Piping and Equipment."

3.4 FIELD QUALITY CONTROL

A. Perform the following tests and inspections:

1. Test reduced-pressure-principle backflow preventer according to authorities having jurisdiction and the device's reference standard.

B. Domestic water piping specialties will be considered defective if they do not pass tests and inspections.

C. Prepare test and inspection reports.

END OF SECTION

SECTION 22 13 16 – SANITARY WASTE AND VENT PIPING – IG/PC

PART 1 - GENERAL

1.1 SUMMARY

A. Section Includes:

1. Pipe, tube, and fittings.
2. Specialty pipe fittings.

1.2 PERFORMANCE REQUIREMENTS

A. Components and installation shall be capable of withstanding the following minimum working pressure unless otherwise indicated:

1. Soil, Waste, and Vent Piping: 10-foot head of water.
2. Waste, Force-Main Piping: 150 psig.

1.3 ACTION SUBMITTALS

A. Product Data: For each type of product indicated.

1.4 INFORMATIONAL SUBMITTALS

A. Field quality-control reports.

1.5 QUALITY ASSURANCE

A. Piping materials shall bear label, stamp, or other markings of specified testing agency.

1.6 PROJECT CONDITIONS

A. Interruption of Existing Sanitary Waste Service: Do not interrupt service to facilities occupied by City of New York or others unless permitted under the following conditions and then only after arranging to provide temporary service according to requirements indicated:

1. Notify Engineer no fewer than two days in advance of proposed interruption of sanitary waste service.
2. Do not proceed with interruption of sanitary waste service without Engineer's written permission.

PART 2 - PRODUCTS

2.1 PIPING MATERIALS

A. Comply with requirements in "Piping Schedule" Article for applications of pipe, tube, fitting materials, and joining methods for specific services, service locations, and pipe sizes.

2.2 HUB-AND-SPIGOT, CAST-IRON SOIL PIPE AND FITTINGS

A. Pipe and Fittings: ASTM A 74, Service class.

B. Gaskets: ASTM C 564, rubber.

C. Calking Materials: Oakum or hemp.

D. Hub-and-Spigot Pipe and Pipe Fittings:

1. Manufacturers: Subject to compliance with requirements, provide products by one of the following:

   a. ANACO-Husky.

   b. Dallas Specialty & Mfg. Co.

   c. Fernco Inc.

   d. Matco-Norca, Inc.

   e. MIFAB, Inc.

   f. Mission Rubber Company; a division of MCP Industries, Inc.

   g. Stant.

   h. Tyler Pipe.

   i. Or approved equal.

2. Standards: ASTM C 564, ASTM C 1563.

3. Description: Compression gaskets for hub and spigot pipe and fittings shall conform to ASTM C 564 and shall be tested to ASTM C 1563

2.3 HUBLESS, CAST-IRON SOIL PIPE AND FITTINGS

A. Pipe and Fittings: ASTM A 888 or CISPI 301.

B. ASTM B16.4 Gray Iron Threaded Fittings Classes 125 and 250

C. ASTM B16.12 Cast Iron Threaded Drainage Fittings

D. CISPI, Hubless-Piping Couplings:

1. Manufacturers: Subject to compliance with requirements, provide products by one of the following:

   a. ANACO-Husky.

   b. Dallas Specialty & Mfg. Co.

   c. Fernco Inc.

   d. Matco-Norca, Inc.

   e. MIFAB, Inc.

   f. Mission Rubber Company; a division of MCP Industries, Inc.

   g. Stant.

   h. Tyler Pipe.

   i. Or approved equal.

2. Standards: ASTM C 1277, ASTM C 1540 or CISPI 310.

3. Description: The elastomeric sealing sleeve shall conform to ASTM C 564 or CAN/CSA B602 and shall provide with a center stop.

2.5 SPECIALTY PIPE FITTINGS

A. Transition Couplings:

1. General Requirements: Fitting or device for joining piping with small differences in OD's or of different materials. Include end connections same size as and compatible with pipes to be joined.

2. Fitting-Type Transition Couplings: Manufactured piping coupling or specified piping system fitting.

3. Unshielded, Nonpressure Transition Couplings:

   a. Manufacturers: Subject to compliance with requirements, provide products by one of the following:

      1) Dallas Specialty & Mfg. Co.

      2) Fernco Inc.

      3) Mission Rubber Company; a division of MCP Industries, Inc.

      4) Plastic Oddities; a division of Diverse Corporate Technologies, Inc.

      5) or approved equal

   b. Standard: ASTM C 1173.

   c. Description: Elastomeric, sleeve-type, reducing or transition pattern. Include shear ring and corrosion-resistant-metal tension band and tightening mechanism on each end.

   d. Sleeve Materials:

      1) For Cast-Iron Soil Pipes: ASTM C 564, rubber.

      2) For Plastic Pipes: ASTM F 477, elastomeric seal or ASTM D 5926, PVC.

      3) For Dissimilar Pipes: ASTM D 5926, PVC or other material compatible with pipe materials being joined.

4. Shielded, Nonpressure Transition Couplings:

   a. Manufacturers: Subject to compliance with requirements, provide products by one of the following:

      1) Cascade Waterworks Mfg. Co.

      2) Mission Rubber Company; a division of MCP Industries, Inc.

      3) Fernco Inc.

      4) Or approved equal

   b. Standard: ASTM C 1460.

   c. Description: Elastomeric or rubber sleeve with full-length, corrosion-resistant outer shield and corrosion-resistant-metal tension band and tightening mechanism on each end.

5. Mechanical Transition Couplings:
   a. Manufacturers: Subject to compliance with requirements, provide products by one of the following:
      1) Cascade Waterworks Mfg. Co.
      2) Dresser, Inc.
      3) EBAA Iron, Inc.
      4) JCM Industries, Inc.
      5) Romac Industries, Inc.
      6) Smith-Blair, Inc.; a Sensus company.
      7) The Ford Meter Box Company, Inc.
      8) Viking Johnson.
      9) Or approved equal.
   b. Standard: ASTM C 1461
   c. Description: Thermoplastic Electrometric gasket

B. Dielectric Fittings:
   1. General Requirements: Assembly of copper alloy and ferrous materials with separating nonconductive insulating material. Include end connections compatible with pipes to be joined.
   2. Dielectric Unions:
      a. Manufacturers: Subject to compliance with requirements, provide products by one of the following:
         1) Capitol Manufacturing Company.
         2) Central Plastics Company.
         3) Hart Industries International, Inc.
         4) Jomar International Ltd.
         5) Matco-Norca, Inc.
         6) McDonald, A. Y. Mfg. Co.
         7) Watts Regulator Co.; a division of Watts Water Technologies, Inc.
         8) Wilkins; a Zurn company.
         9) Or approved equal.
      b. Description:
         1) Standard: ASSE 1079.
         2) Pressure Rating: 125 psig (860 kPa) minimum at 180 deg F (82 deg C).
         3) End Connections: Solder-joint copper alloy and threaded ferrous.

3. Dielectric Flanges:
   a. Manufacturers: Subject to compliance with requirements, provide products by one of the following:
      1) Capitol Manufacturing Company.
      2) Central Plastics Company.
      3) Matco-Norca, Inc.
      4) Watts Regulator Co.; a division of Watts Water Technologies, Inc.
      5) Wilkins; a Zurn company.
      6) Or approved equal.
   b. Description:
      1) Standard: ASSE 1079.
      2) Factory-fabricated, bolted, companion-flange assembly.
      3) Pressure Rating: 125 psig (860 kPa) minimum at 180 deg F (82 deg C).
      4) End Connections: Solder-joint copper alloy and threaded ferrous; threaded solder-joint copper alloy and threaded ferrous.
4. Dielectric-Flange Insulating Kits:
   a. Manufacturers: Subject to compliance with requirements, provide products by one of the following:
      1) Advance Products & Systems, Inc.
      2) Calpico, Inc.
      3) Central Plastics Company.
      4) Pipeline Seal and Insulator, Inc.
      5) Or approved equal.
   b. Description:
      1) Nonconducting materials for field assembly of companion flanges.
      2) Pressure Rating: 150 psig (1035 kPa).
      3) Gasket: Neoprene or phenolic.
      4) Bolt Sleeves: Phenolic or polyethylene.
      5) Washers: Phenolic with steel backing washers.
5. Dielectric Nipples:
   a. Manufacturers: Subject to compliance with requirements, provide products by one of the following:
      1) Elster Perfection.
      2) Grinnell Mechanical Products.
      3) Matco-Norca, Inc.

4) Precision Plumbing Products, Inc.

5) Victaulic Company.

6) Or approved equal.

b. Description:

1) Standard: IAPMO PS 66

2) Electroplated steel nipple.

3) Pressure Rating: 300 psig (2070 kPa) at 225 deg F (107 deg C).

4) End Connections: Male threaded or grooved.

5) Lining: Inert and noncorrosive, propylene.

PART 3 - EXECUTION

3.1 PIPING INSTALLATION

A. Drawing plans, schematics, and diagrams indicate general location and arrangement of piping systems. Indicated locations and arrangements were used to size pipe and calculate friction loss, expansion, pump sizing, and other design considerations. Install piping as indicated unless deviations to layout are approved on coordination drawings.

B. Install piping in concealed locations unless otherwise indicated and except in equipment rooms and service areas.

C. Install piping indicated to be exposed and piping in equipment rooms and service areas at right angles or parallel to building walls. Diagonal runs are prohibited unless specifically indicated otherwise.

D. Install piping above accessible ceilings to allow sufficient space for ceiling panel removal.

E. Install piping to permit valve servicing.

F. Install piping at indicated slopes.

G. Install piping free of sags and bends.

H. Install fittings for changes in direction and branch connections.

I. Install piping to allow application of insulation.

K. Make changes in direction for soil and waste drainage and vent piping using appropriate branches, bends, and long-sweep bends. Sanitary tees and short-sweep 1/4 bends may be used on vertical stacks if change in direction of flow is from horizontal to vertical. Use long-turn, double Y-branch and 1/8-bend fittings if two fixtures are installed back to back or side by side with common drain pipe. Straight tees, elbows, and crosses may be used on vent lines. Do not change direction of flow more than 90 degrees. Use proper size of standard increasers and reducers if pipes of different sizes are connected. Reducing size of drainage piping in direction of flow is prohibited.

L. Lay buried building drainage piping beginning at low point of each system. Install true to grades and alignment indicated, with unbroken continuity of invert. Place hub ends of piping upstream. Install required gaskets according to manufacturer's written instructions for use of lubricants, cements, and other installation requirements.

Maintain swab in piping and pull past each joint as completed.

M. Install soil and waste drainage and vent piping at the following minimum slopes unless otherwise indicated:

1. Building Sanitary Drain: 2 NPS 3 and smaller; 2 percent downward in direction of flow for piping NPS 4 and larger.
2. Horizontal Sanitary Drainage Piping: 2 percent downward in direction of flow.
3. Vent Piping: 1 percent down toward vertical fixture vent or toward vent stack.

N. Install cast-iron soil piping according to CISPI's "Cast Iron Soil Pipe and Fittings Handbook," Chapter IV, "Installation of Cast Iron Soil Pipe and Fittings."

1. Install encasement on underground piping according to ASTM A 674 or AWWA C105/A 21.5.

O. Install steel piping according to applicable plumbing code.

P. Install engineered soil and waste drainage and vent piping systems as follows:

1. Combination Waste and Vent: Comply with standards of authorities having jurisdiction.
3. Reduced-Size Venting: Comply with standards of authorities having jurisdiction.

Q. Install underground, ductile-iron, force-main piping according to AWWA C600. Install buried piping inside building between wall and floor penetrations and connection to sanitary sewer piping outside building with restrained joints. Anchor pipe to wall or floor. Install thrust-block supports at vertical and horizontal offsets.

1. Install encasement on piping according to ASTM A 674 or AWWA C105/A 21.5.

R. Install underground, copper, force-main tubing according to CDA's "Copper Tube Handbook."

1. Install encasement on piping according to ASTM A 674 or AWWA 105/A 21.5.

S. Install force mains at elevations indicated.

T. Plumbing Specialties:

1. Install backwater valves in sanitary waster gravity-flow piping. Comply with requirements for backwater valves specified in Section 221319 "Sanitary Waste Piping Specialties."
2. Install cleanouts at grade and extend to where building sanitary drains connect to building sanitary sewers in sanitary drainage gravity-flow piping. Install cleanout fitting with closure plug inside the building in sanitary drainage force-main piping. Comply with requirements for cleanouts specified in Section 221319 "Sanitary Waste Piping Specialties."
3. Install drains in sanitary drainage gravity-flow piping. Comply with requirements for drains specified in Section 221319 "Sanitary Waste Piping Specialties."

U. Do not enclose, cover, or put piping into operation until it is inspected and approved by authorities having jurisdiction.

V. Install sleeves for piping penetrations of walls, ceilings, and floors. Comply with requirements for sleeves specified in Section 220517 "Sleeves and Sleeve Seals for Plumbing Piping."

W. Install sleeve seals for piping penetrations of concrete walls and slabs. Comply with requirements for sleeve seals specified in Section 220517 "Sleeves and Sleeve Seals for Plumbing Piping."

X. Install escutcheons for piping penetrations of walls, ceilings, and floors. Comply with requirements for escutcheons specified in Section 220518 "Escutcheons for Plumbing Piping."

3.2 JOINT CONSTRUCTION

B. Caulked Joints: Joints for hub and spigot pipe shall be firmly packed with oakum or hemp. Molten lead shall be poured in one operation to a depth of not less than 1 inch. The lead shall not recede more than 0.125 inch below the rim of the hub and shall be caulked tight. Paint, varnish or other coatings shall not be permitted on the jointing material until after the join has been tested and approved. Lead shall be run in one pouring and shall be caulked tight. Acid-resistant rope and acid proof cement shall be permitted.

A. Compression Gasket Joints: Compression gaskets for hub and spigot pipe and fittings shall conform to ASTM C 564 and shall be tested to ASTM C 1563. Gaskets shall be compressed when the pipe is fully insert.

B. Mechanical Joint Coupling: Mechanical Joint coupling for hub-less pipe and fittings shall comply with CISPI 310 or ASTM C 1277 or ASTM C 1540. The elastomeric sealing sleeve shall conform to ASTM C 564 or CAN/CSA B602 and shall be provided with a center stop. Mechanical joint couplings shall be installed in accordance with the manufacturer’s installation instructions.

C. Join hub-and-spigot, cast-iron soil piping with calked joints according to CISPI's "Cast Iron Soil Pipe and Fittings Handbook" for lead-and-oakum calked joints

D. Join hubless, cast-iron soil piping according to CISPI 310 and CISPI's "Cast Iron Soil Pipe and Fittings Handbook" for hubless-piping coupling joints. Threaded Joints:

E. Joints between different materials: Joints between different piping materials shall be made with a mechanical joint of the compression or mechanical-sealing type conforming to ASTM C1173, ASTM C 1460, or ASTM C 1461. Connectors and adaptors shall have an elastomeric seal conforming to ASTM C 425, ASTM C 443, ASTM C 564, ASTM C 1440, ASTM D 1869, ASTM F 477, CAN/CSA A257.3 M or CAN/CSA B 602 or as required from following:

1. Copper or copper-alloy tubing to cast-iron hub pipe: Joints between copper or copper-alloy tubing and cast-iron hub pipe shall be made with a brass ferrule or compression joint. The copper or copper-alloy tubing shall be soldered to the ferrule in an approved manner, and the ferrule shall be joined to the cast-iron hub by a caulked joint or a mechanical compression joint.

2. Cast-iron pipe to galvanized steel or brass pipe: Joints between cast-iron and galvanized steel or brass pipe shall be made by either caulked or threaded joints or with an approved adapter fitting.

3. Plastic pipe or tubing to other material: Joints between different grades of plastic pipe or between plastic pipe and other piping material shall be made with an approved adapter fitting. Joints between plastic pipe and cast iron hub pipe shall be made by a caulked joint or a mechanical compression joint.

4. Lead pipe to other piping materials: Joint between lead pipe and other piping material shall be made by a wiped joint to a caulking ferrule, soldering nipple, or

bushing or shall be made with an approved adapter fitting.

5. Borosilicate glass to other materials: Joints between glass pipe and other type of materials shall be made with adapters having a TFE seal and shall be installed in accordance with the manufacturer's instruction.

6. Stainless steel drainage systems to other materials: Joints between stainless steel drainage systems and other piping materials shall be made with approved mechanical couplings.

Joint between glass pipe and other types of materials shall be made with adapters having a TEF seal. Joint shall be installed in accordance with the manufacturer's instructions.

F. Slip Joints connections: Slip joints shall be made with an approved elastomeric gasket and shall only be installed on the trap outlet, trap inlet and within the trap seal. Fixtures with concealed slip-joint connections shall be provided with an access panel or utility space at least 12 inches in its smallest dimension or other approved arrangement so as to provide access to the slip joint connection for inspection.

G. Caulking ferrules: Ferrules shall be of red brass and shall be in accordance with 2014 New York City Plumbing Code Table 705.21 Caulking Ferrule Specifications

H. Soldering Bushing: Soldering bushing shall be of red brass and shall be in accordance with 2014 New York City Plumbing Code Table 705.22 – Soldering Busing Specifications.

I. Thread pipe with tapered pipe threads according to ASME B1.20.1. Cut threads full and clean using sharp dies. Ream threaded pipe ends to remove burrs and restore full ID. Join pipe fittings and valves as follows:

1. Apply appropriate tape or thread compound to external pipe threads unless dry seal threading is specified.

2. Damaged Threads: Do not use pipe or pipe fittings with threads that are corroded or damaged. Do not use pipe sections that have cracked or open

3.3 SPECIALTY PIPE FITTING INSTALLATION

A. Transition Couplings:

1. Install transition couplings at joints of piping with small differences in OD's.

2. In Drainage Piping: Shielded, nonpressure transition couplings.

3. In Aboveground Force Main Piping: Fitting-type transition couplings.

4. In Underground Force Main Piping:

a. NPS 1-1/2 and Smaller: Fitting-type transition couplings.

b. NPS 2 and Larger: Pressure transition couplings.

B. Dielectric Fittings:

1. Install dielectric fittings in piping at connections of dissimilar metal piping and tubing.

2. Dielectric Fittings for NPS 2 and Smaller: Use dielectric nipples.

3. Dielectric Fittings for NPS 2-1/2 to NPS 4: Use dielectric nipples.

4. Dielectric Fittings for NPS 5 and Larger: Use dielectric flange kits.

3.4 HANGER AND SUPPORT INSTALLATION

A. Comply with requirements for pipe hanger and support devices and installation specified in Section 22 05 29 "Hangers and Supports for Plumbing Piping and Equipment."

B. Comply with requirements for pipe hanger and support devices and installation specified in Section 22 05 29 "Hangers and Supports for Plumbing Piping and Equipment."

1. Install carbon-steel pipe hangers for horizontal piping in noncorrosive environments.
2. Install stainless-steel pipe hangers for horizontal piping in corrosive environments.
3. Install carbon-steel pipe support clamps for vertical piping in noncorrosive environments.
4. Install stainless-steel pipe support clamps for vertical piping in corrosive environments.
5. Vertical Piping: MSS Type 8 or Type 42, clamps.
6. Install individual, straight, horizontal piping runs:
   a. 100 Feet and Less: MSS Type 1, adjustable, steel clevis hangers.
   b. Longer Than 100 Feet : MSS Type 43, adjustable roller hangers.
   c. Longer than 100 Feet if indicated: MSS Type 49, spring cushion rolls.
7. Multiple, Straight, Horizontal Piping Runs 100 Feet or Longer: MSS Type 44, pipe rolls. Support pipe rolls on trapeze.
8. Base of Vertical Piping: MSS Type 52, spring hangers.

C. Support horizontal piping and tubing within 12 inches (300 mm) of each fitting, valve, and coupling.

D. Support vertical piping and tubing at base and at each floor.

E. Rod diameter may be reduced one size for double-rod hangers, with 3/8-inch (10-mm) minimum rods.

F. Install hangers for cast-iron soil piping with the following maximum horizontal spacing and minimum rod diameters:

1. NPS 1-1/2 and NPS 2: 60 inches with 3/8-inch rod.
2. NPS 3: 60 inches with 1/2-inch rod.
3. NPS 4 and NPS 5: 60 inches with 5/8-inch rod.
4. NPS 6 and NPS 8: 60 inches with 3/4-inch rod.
5. NPS 10 and NPS 12: 60 inches with 7/8-inch rod.
6. Spacing for 10-foot lengths may be increased to 10 feet. Spacing for fittings is limited to 60 inches.

G. Install supports for vertical cast-iron soil piping at base and at each story height no greater than 20 feet.

H. Install hangers for steel piping with the following maximum horizontal spacing and minimum rod diameters:

1. NPS 1-1/4: 84 inches with 3/8-inch rod.
2. NPS 1-1/2: 108 inches with 3/8-inch rod.
3. NPS 2: 10 feet with 3/8-inch rod.
4. NPS 2-1/2: 11 feet with 1/2-inch rod.
5. NPS 3: 12 feet with 1/2-inch rod.
6. NPS 4 and NPS 5: 12 feet with 5/8-inch rod.
7. NPS 6 and NPS 8: 12 feet with 3/4-inch rod.
8. NPS 10 and NPS 12: 12 feet with 7/8-inch rod.

I. Install supports for vertical steel piping every 15 feet.

3.5 CONNECTIONS

A. Drawings indicate general arrangement of piping, fittings, and specialties.

B. Connect soil and waste piping to exterior sanitary sewerage piping. Use transition fitting to join dissimilar piping materials.

C. Connect drainage and vent piping to the following:

1. Plumbing Fixtures: Connect drainage piping in sizes indicated, but not smaller than required by plumbing code.
2. Plumbing Fixtures and Equipment: Connect atmospheric vent piping in sizes indicated, but not smaller than required by authorities having jurisdiction.
3. Plumbing Specialties: Connect drainage and vent piping in sizes indicated, but not smaller than required by plumbing code.
4. Install test tees (wall cleanouts) in conductors near floor and floor cleanouts with cover flush with floor.
5. Comply with requirements for cleanouts and drains specified in Section 221319 "Sanitary Waste Piping Specialties."
6. Equipment: Connect drainage piping as indicated. Provide shutoff valve if indicated and union for each connection. Use flanges instead of unions for connections NPS 2-1/2 and larger.

D. Connect force-main piping to the following:

1. Sanitary Sewer: To exterior force main.

E. Where installing piping adjacent to equipment, allow space for service and maintenance of equipment.

F. Make connections according to the following unless otherwise indicated:

1. Install unions, in piping NPS 2 and smaller, adjacent to each valve and at final connection to each piece of equipment.
2. Install flanges, in piping NPS 2-1/2 and larger, adjacent to flanged valves and at final connection to each piece of equipment.

3.6 IDENTIFICATION

A. Identify exposed sanitary waste and vent piping. Comply with requirements for identification specified in Section 220553 "Identification for Plumbing Piping and Equipment."

3.7 FIELD QUALITY CONTROL

A. During installation, notify authorities having jurisdiction at least 24 hours before inspection must be made. Perform tests specified below in presence of authorities having jurisdiction.

1. Roughing-in Inspection: Arrange for inspection of piping before concealing or closing-in after roughing-in and before setting fixtures.

2. Final Inspection: Arrange for final inspection by authorities having jurisdiction to observe tests specified below and to ensure compliance with requirements.

B. Re-inspection: If authorities having jurisdiction find that piping will not pass test or inspection, make required corrections and arrange for re-inspection.

C. Reports: Prepare inspection reports and have them signed by authorities having jurisdiction.

D. Test sanitary drainage and vent piping according to procedures of authorities having jurisdiction or, in absence of published procedures, as follows:

1. Test for leaks and defects in new piping and parts of existing piping that have been altered, extended, or repaired. If testing is performed in segments, submit separate report for each test, complete with diagram of portion of piping tested.

2. Leave uncovered and unconcealed new, altered, extended, or replaced drainage and vent piping until it has been tested and approved. Expose work that was covered or concealed before it was tested.

3. Roughing-in Plumbing Test Procedure: Test drainage and vent piping except outside leaders on completion of roughing-in. Close openings in piping system and fill with water to point of overflow, but not less than 10-foot head of water. From 15 minutes before inspection starts to completion of inspection, water level must not drop. Inspect joints for leaks.

4. Finished Plumbing Test Procedure: After plumbing fixtures have been set and traps filled with water, test connections and prove they are gastight and watertight. Plug vent- stack openings on roof and building drains where they leave building. Introduce air into piping system equal to pressure of 1-inch wg (250 Pa). Use U-tube or manometer inserted in trap of water closet to measure this pressure. Air pressure must remain constant without introducing additional air throughout period of inspection. Inspect plumbing fixture connections for gas and water leaks.

5. Repair leaks and defects with new materials and retest piping, or portion thereof, until satisfactory results are obtained.

6. Prepare reports for tests and required corrective action.

E. Test force-main piping according to procedures of authorities having jurisdiction or, in absence of published procedures, as follows:

1. Leave uncovered and unconcealed new, altered, extended, or replaced force-

main piping until it has been tested and approved. Expose work that was covered or concealed before it was tested.

2. Cap and subject piping to static-water pressure of 50 psig above operating pressure, without exceeding pressure rating of piping system materials. Isolate test source and allow to stand for four hours. Leaks and loss in test pressure constitute defects that must be repaired.

3. Repair leaks and defects with new materials and retest piping, or portion thereof, until satisfactory results are obtained.

4. Prepare reports for tests and required corrective action.

3.8 CLEANING AND PROTECTION

A. Clean interior of piping. Remove dirt and debris as work progresses.

B. Protect drains during remainder of construction period to avoid clogging with dirt and debris and to prevent damage from traffic and construction work.

C. Place plugs in ends of uncompleted piping at end of day and when work stops.

3.9 PIPING SCHEDULE

A. Flanges and unions may be used on aboveground pressure piping unless otherwise indicated.

B. Aboveground, soil and waste piping NPS 4 and smaller shall be any of the following:

1. Hubless, cast-iron soil pipe and fittings CISPI heavy-duty hubless-piping couplings; and coupled joints.

2. Copper DWV tube, copper drainage fittings, and soldered joints.

3. Dissimilar Pipe-Material Couplings: Shielded, nonpressure transition couplings.

C. Aboveground, soil and waste piping NPS 5 and larger shall be any of the following:

1. Service class, cast-iron soil pipe and fittings; gaskets; and gasketed joints.

2. Hubless, cast-iron soil pipe and fittings and sovent stack fittings; CISP hubless-piping couplings; and coupled joints.

3. Dissimilar Pipe-Material Couplings: Shielded, nonpressure transition couplings.

D. Aboveground, vent piping NPS 4 and smaller shall be any of the following:

1. Service class, cast-iron soil pipe and fittings; gaskets; and gasketed joints.

2. Hubless, cast-iron soil pipe and fittings; [CISPI] [heavy-duty] hubless-piping couplings; and coupled joints.

3. Galvanized-steel pipe, drainage fittings, and threaded joints.

4. Copper DWV tube, copper drainage fittings, and soldered joints.

a. Option for Vent Piping, NPS 2-1/2 and NPS 3-1/2: Hard copper tube, Type K; copper pressure fittings; and soldered joints.

5. Dissimilar Pipe-Material Couplings: Shielded, nonpressure transition couplings.

E. Aboveground, vent piping NPS 5 and larger shall be any of the following:

1. Service class, cast-iron soil pipe and fittings; gaskets; and gasketed joints.

2. Hubless, cast-iron soil pipe and fittings; [CISPI] hubless-piping couplings; and coupled joints.
3. Galvanized-steel pipe, drainage fittings, and threaded joints.
4. Dissimilar Pipe-Material Couplings: Shielded, nonpressure transition couplings.

F. Aboveground sanitary-sewage force mains NPS 1-1/2 and NPS 2 shall be any of the following:

1. Hard copper tube, Type K; copper pressure fittings; and soldered joints.
2. Galvanized-steel pipe, pressure fittings, and threaded joints.

G. Belowground, sanitary and vent piping shall be the following:

1. Extra heavy-weight, coated, cast iron bell and spigot pipe and fittings with Neoprene gasket joints.

END OF SECTION

SECTION 22 13 19 – SANITARY WASTE PIPING SPECIALTIES – IG/PC

PART 1 - GENERAL

1.1 RELATED DOCUMENTS

A. The work under this section shall include all labor, material, plant equipment, services and administrative tasks required to complete and make operable the plumbing work

1.2 SUMMARY

A. Section Includes:

1. Cleanouts.
2. Floor drains with cleanout
3. Backwater valves
3. Oil-Water Separator
4. Miscellaneous sanitary drainage piping specialties.
5. Flashing materials.

B. Related Requirements:

1. Section 22 13 16 "Sanitary Waste and Vent piping" for piping inside the building, drainage piping specialties, and drains.

1.3 ACTION SUBMITTALS

A. Product Data: For each type of product indicated. Include rated capacities, operating characteristics, and accessories for the following:

B. Shop Drawings: Show fabrication and installation details for frost-resistant vent terminals.

1. Wiring Diagrams: Power, signal, and control wiring.

C. Field quality-control reports.

1.4 CLOSEOUT SUBMITTALS

A. Operation and Maintenance Data: For drainage piping specialties to include in emergency, operation, and maintenance manuals.

1.5 QUALITY ASSURANCE

A. Drainage piping specialties shall bear label, stamp, or other markings of specified testing agency.

B. Electrical Components, Devices, and Accessories: Listed and labeled as defined in NFPA 70, Article 100, by a testing agency acceptable to authorities having jurisdiction, and marked for intended use.

C. Comply with NSF 14, "Plastics Piping Components and Related Materials," for plastic sanitary piping specialty components.

1.6 COORDINATION

A. Coordinate size and location of concrete bases. Cast anchor-bolt inserts into bases. Concrete, reinforcement, and formwork requirements are specified in Section 033000 “Cast-in-Place Concrete."

B. Coordinate size and location of roof penetrations.

PART 2 - PRODUCTS

2.1 CLEANOUTS

A. Exposed Metal Cleanouts:

1. Manufacturers: Subject to compliance with requirements, provide products by the following:

   1) Josam Company.
   2) MIFAB, Inc.
   3) Smith, Jay R. Mfg. Co.
   4) Tyler Pipe.
   5) Watts Drainage Products.
   6) Zurn Plumbing Products Group.
   7) Or approved equal.

2. Standard: ASME A112.3.1, ASME A112.36.2M or ASTM A 74
3. Size: Minimum 3-inch or same as connected drainage piping.
4. Body: Cast-iron hubless, cast-iron soil pipe test tee as required to match connected piping.
5. Closure: Countersunk cast-iron plug.
6. Closure Plug Size: Same as or not more than one size smaller than cleanout size.
7. Cleanout plug: Brass. Countersunk square head.

B. Cast-Iron Wall Cleanouts:

1. Manufacturers: Subject to compliance with requirements, provide products by the following:

   a. Josam Company; Josam Div.
   b. MIFAB, Inc.
   c. Smith, Jay R. Mfg. Co.
   d. Tyler Pipe; Wade Div.
   e. Watts Drainage Products.
   f. Zurn Plumbing Products Group; Specification Drainage Operation.
   g. Or approved equal.

2. Standard: ASME A112.36.2M. Include wall access.
3. Size: Same as connected drainage piping.
4. Body: Cast-iron hubless, cast-iron soil pipe test tee as required to match connected piping.
5. Closure: Countersunk cast-iron plug.
6. Closure Plug Size: Same as or not more than one size smaller than cleanout size.
7. Wall Access: Round, deep, chrome-plated bronze cover plate with screw.
8. Wall Access: Round, nickel-bronze, wall-installation frame and cover.
9. Cleanout plug: Brass. Countersunk square head.

2.2 FLOOR DRAINS WITH INTREGAL TRAP AND FLOOR-LEVEL CLEANOUTS

A. Cast-Iron Floor Drains:

1. Manufacturers: Subject to compliance with requirements, provide products by the following:
   a. Josam Company; Josam Div.
   b. MIFAB, Inc.
   c. Prier Products, Inc.
   d. Smith, Jay R. Mfg. Co.
   e. Tyler Pipe; Wade Div.
   f. Watts Drainage Products.
   g. Zurn Plumbing Products Group; Light Commercial Operation.
   h. Or approved equal.
2. Standard: ASME A112.3.1, ASME A112.6. Or CSA B79
3. Pattern: Floor drain.
4. Body Material: Cast iron.
5. Seepage Flange Required.
6. Anchor Flange: Required.
7. Clamping Device: Required.
8. Outlet: Minimum 3-inch and Bottom.
9. Coating on Interior and Exposed Exterior Surfaces: Not required.
10. Sediment Bucket: Not required.
11. Top or Strainer Material: Removable strainer and Stainless Steel
12. Top of Body and Strainer Finish: Stainless Steel
13. Top Shape: Round.
14. Funnel: Not required.

15. Inlet Fitting: Not required Gray iron, with threaded inlet and threaded or spigot outlet, and trap-seal primer valve connection.
16. Trap Material: Bronze
17. Trap Pattern: Standard P-trap
18. Trap Features: Cleanout

2.3 MISCELLANEOUS SANITARY DRAINAGE PIPING SPECIALTIES

A. Floor-Drain, Trap-Seal Primer Fittings:

1. Description: Cast iron, with threaded inlet and threaded or spigot outlet, and trap-seal primer valve connection.
2. Size: Same as floor drain outlet with NPS 1/2 side inlet.

B. Sleeve Flashing Device:

1. Description: Manufactured, cast-iron fitting, with clamping device that forms sleeve for pipe floor penetrations of floor membrane. Include galvanized-steel pipe extension in top of fitting that will extend dimension identified by engineer, above finished floor and galvanized-steel pipe extension in bottom of fitting that will extend through floor slab.
2. Size: As required for close fit to riser or stack piping.

2.4 OIL-WATER SEPARATOR

A. Oil-Water Separator shall conform to the following requirements:

1. The oil-water separator shall be double wall and designed for the specific project requirements and shall be a factory assembled unit which is a product of a manufacturer regularly engaged in the production of such equipment with similar units operating for a minimum of five years.
2. The oil-water separator shall be designed in accordance with Chapter 3 and 5 of the American Petroleum Institute (API) Manual on Disposal of Refinery Wastes (Volume on Liquid Wastes, Latest Edition) and with API Bulletin #1630, First Edition, May, 1979
3. Construction and thickness of the separator shall be in strict accordance with specifications established in Underwriters' Laboratories, Subject (UL-58 Standard for Steel Underground Tanks) meeting or exceeding requirements for specified depth of burial.
4. Separator shall bear the UL1746 label. Construction shall consist of a steel tank of all welded construction with a minimum of 100 of fiberglass Resin bonded to the exterior wall of the tank. The exterior structure shall show no holidays when using a Tinker & Rasor Model AP-W Holiday Detector set at 35,000 volts. By virtue of the UL listing, separator shall be warranted against external corrosion for 30 years without the need for cathodic protection.
5. The separator shall be designed for intermittent, variable or continuous flows of water, oil and/or any combination of non-emulsified oil-water mixtures containing up to 200,000 mg/L hydrocarbons and 100% hydrocarbons under spill conditions.
6. The separator shall process uncontrolled surges of water, oil, or oil/water

mixtures ranging from zero flow up to 100% of maximum hydraulic throughput capacity and provide water effluents which meet continuous discharge requirements of 15 PPM or less of oil and grease. The separator shall otherwise meet all Federal, State, and local requirements outlined in this specification.

7. The separator shall be designed in a manner to minimize solids build-up in the oil-water separator chamber, which could reduce the oil-water separation of the unit.

8. The separator shall be structurally designed to withstand underground soil pressure loads as dictated by the design depth below finished grade as indicated on the drawings, and/or static and dynamic loads for above ground location and installation.

9. The separator shall process oily water influent by means of continuous gravity flow and by specific gravity differential with enhancement. The separator shall be engineered and sized to handle flows as shown on the drawings.

10. As indicated on the drawings, the separator shall be 550 gallons total volume, cylindrical, with a pair of 24" I.D. access manways to the separation chamber to provide for easy maintenance.

11. The oil-water separator shall consist of a buried steel separation vessel buried as indicated on the drawings. A series of corrugated parallel plates shall be downstream set at a minimum 45 degree angle, spaced every no closer than 1/4" apart and supported by steel supports, welded to a solid steel plate on either side of the separator wall. This series of plates shall be located as close as possible to the inlet end of the separator in order to effect coalescence of the oil particles as soon as possible. Inlet, outlet and separation compartment shall be vented to the atmosphere. All vents shall terminate at elevations above grade as indicated on the drawings and shall be equipped per governing codes. The top covers of the separator manways shall be removable. Covers shall be completely gasketed. Provide all connections for pipe as shown on the drawings. All maintenance and entry access hardware shall be stainless steel. The separator shall be furnished with fittings for vent, waste oil pump out, float sensors, and incidental fitting for separate oil pump-out for oil removal prior to the oil reaching the 500 gallon mark. The outlet pipe shall be 6" diameter and extend to within 6" of the bottom of the separator, and be braced to the end of the separator.

12. The Oil-Water Separator should be as manufactured by HIGHLAND TANK, Model No. HTC 550 or approved equal.

    Acceptable manufactures:

    - Highland Tank, One Highland Road, Stoystown, PA.
    - HydroFloTech, 2560 Foxfield Road, St Charles IL.
    - Mercer International Inc., 4 Mountainside Rd., Mendham, NJ.

2.6 FLASHING MATERIALS

A. Lead Sheet: ASTM B 749, Type L51121, copper bearing, with the following minimum weights and thicknesses, unless otherwise indicated:

1. General Use: 4.0-lb/sq. ft., 0.0625-inch thickness.
2. Vent Pipe Flashing: 3.0-lb/sq. ft., 0.0469-inch thickness.

3. Burning: 6-lb/sq. ft., 0.0938-inch thickness.

B. Copper Sheet: ASTM B 152/B 152M, of the following minimum weights and thicknesses, unless otherwise indicated:

1. General Applications: 12 oz. /sq. ft.

2. Vent Pipe Flashing: 8 oz. /sq. ft.

C. Zinc-Coated Steel Sheet: ASTM A 653/A 653M, with 0.20 percent copper content and 0.04- inch minimum thickness, unless otherwise indicated. Include G90 hot-dip galvanized, mill-phosphatized finish for painting if indicated.

D. Elastic Membrane Sheet: ASTM D 4068, flexible, chlorinated polyethylene, 40-mil minimum thickness.

E. Fasteners: Metal compatible with material and substrate being fastened.

F. Metal Accessories: Sheet metal strips, clamps, anchoring devices, and similar accessory units required for installation; matching or compatible with material being installed.

G. Solder: ASTM B 32, lead-free alloy.

H. Bituminous Coating: SSPC-Paint 12, solvent-type, bituminous mastic.

PART 3 - EXECUTION

3.1 INSTALLATION

A. Install cleanouts in aboveground piping and building drain piping according to the following, unless otherwise indicated:

1. Size same as drainage piping up to NPS 4. Use NPS for larger drainage piping unless larger cleanout is indicated.

2. Locate at each change in direction of piping greater than 45 degrees.

3. Locate at minimum intervals of 50 feet for piping NPS 4 and smaller and 100 feet for larger piping.

4. Locate at base of each vertical soil and waste stack.

B. For floor cleanouts for piping below floors, install cleanout deck plates with top flush with finished floor.

C. For cleanouts located in concealed piping, install cleanout wall access covers, of types indicated, with frame and cover flush with finished wall.

D. Install floor drains at low points of surface areas to be drained. Set grates of drains flush with finished floor, unless otherwise indicated.

1. Position floor drains for easy access and maintenance.

2. Set floor drains below elevation of surrounding finished floor to allow floor drainage. Set with grates depressed according to the following drainage area radii:

a. Radius, 30 Inches or Less: Equivalent to 1 percent slope, but not less than 1/4-inch total depression.

b. Radius, 30 to 60 Inches: Equivalent to 1 percent slope.

c. Radius, 60 Inches or Larger: Equivalent to 1 percent slope, but not greater than 1-inch total depression.

3. Install floor-drain flashing collar or flange so no leakage occurs between drain and adjoining flooring. Maintain integrity of waterproof membranes where penetrated.

4. Install individual traps for floor drains connected to sanitary building drain, unless otherwise indicated.

E. Install trench drains at low points of surface areas to be drained. Set grates of drains flush with finished surface, unless otherwise indicated.

F. Assemble and install ASME A112.3.1, stainless-steel channel drainage systems according to ASME A112.3.1. Install on support devices so that top will be flush with surface.

G. Assemble non-ASME A112.3.1, stainless-steel channel drainage system components according to manufacturer's written instructions. Install on support devices so that top will be flush with adjacent surface.

H. Assemble FRP channel drainage system components according to manufacturer’s written instructions. Install on support devices so that top will be flush with adjacent surface.

I. Assemble plastic channel drainage system components according to manufacturer's written instructions. Install on support devices so that top will be flush with adjacent surface.

J. Install fixture air-admittance valves on fixture drain piping.

K. Install stack air-admittance valves at top of stack vent and vent stack piping.

L. Install air-admittance-valve wall boxes recessed in wall.

M. Install roof flashing assemblies on sanitary stack vents and vent stacks that extend through roof.

N. Install flashing fittings on sanitary stack vents and vent stacks that extend through roof.

O. Assemble open drain fittings and install with top of hub 2 inches above floor.

P. Install deep-seal traps on floor drains and other waste outlets, if indicated.

Q. Install floor-drain, trap-seal primer fittings on inlet to floor drains that require trap-seal primer connection.

1. Exception: Fitting may be omitted if trap has trap-seal primer connection.

2. Size: Same as floor drain inlet.

R. Install air-gap fittings on draining-type backflow preventers and on indirect-waste piping discharge into sanitary drainage system.

S. Install sleeve flashing device with each riser and stack passing through floors with waterproof membrane.

T. Install vent caps on each vent pipe passing through roof.

U. Install wood-blocking reinforcement for wall-mounting-type specialties.

V. Install traps on plumbing specialty drain outlets. Omit traps on indirect wastes unless trap is indicated.

3.2 CONNECTIONS

A. Comply with requirements in Section 221316 "Sanitary Waste and Vent piping" for piping installation requirements. Drawings indicate general arrangement of piping, fittings, and specialties.

B. Install piping adjacent to equipment to allow service and maintenance.

C. FOG Disposal Systems: Connect inlet and outlet to unit, connect flow-control fitting and fresh- air inlet piping to unit inlet piping, and connect vent piping between trap and media chamber. Connect electrical power.

D. Grease Interceptors: Connect inlet and outlet to unit, and connect flow-control fitting and vent to unit inlet piping. Install valve on outlet of automatic draw-off-type unit.

E. Grease Removal Devices: Connect controls, electrical power, factory-furnished accessories, and inlet, outlet, and vent piping to unit.

F. Oil Interceptors: Connect inlet, outlet, vent, and gravity draw-off piping to unit; flow-control fitting and vent to unit inlet piping; and gravity draw-off and suction piping to oil storage tank.

G. Ground equipment according to Section 260526 "Grounding and Bonding for Electrical Systems."

H. Connect wiring according to Section 260519 "Low-Voltage Electrical Power Conductors and Cables."

3.3 FLASHING INSTALLATION

A. Fabricate flashing from single piece unless large pans, sumps, or other drainage shapes are required. Join flashing according to the following if required:

1. Lead Sheets: Burn joints of lead sheets 6.0-lb/sq. ft., 0.0938-inch thickness or thicker. Solder joints of lead sheets 4.0-lb/sq. ft., 0.0625-inch thickness or thinner.

2. Copper Sheets: Solder joints of copper sheets.

B. Install sheet flashing on pipes, sleeves, and specialties passing through or embedded in floors and roofs with waterproof membrane.

1. Pipe Flashing: Sleeve type, matching pipe size, with minimum length of 10 inches, and skirt or flange extending at least 8 inches around pipe.

2. Sleeve Flashing: Flat sheet, with skirt or flange extending at least 8 inches around sleeve.

3. Embedded Specialty Flashing: Flat sheet, with skirt or flange extending at least 8 inches around specialty.

C. Set flashing on floors and roofs in solid coating of bituminous cement.

D. Secure flashing into sleeve and specialty clamping ring or device.

E. Install flashing for piping passing through roofs with counterflashing or commercially made flashing fittings, according to Section 07 6000 "Sheet Metal and Trim."

F. Extend flashing up vent pipe passing through roofs and turn down into pipe, or secure flashing into cast-iron sleeve having calking recess.

G. Fabricate and install flashing and pans, sumps, and other drainage shapes.

3.4 LABELING AND IDENTIFYING

A. Distinguish among multiple units, inform operator of operational requirements, indicate safety and emergency precautions, and warn of hazards and improper operations, in addition to identifying unit. Nameplates and signs are specified in Section 220553 "Identification for Plumbing Piping and Equipment."

3.5 FIELD QUALITY CONTROL

A. Perform tests and inspections and prepare test reports.

1. Manufacturer's Field Service: Engage a factory-authorized service representative to inspect field-assembled FOG disposal systems and grease removal devices and their installation, including piping and electrical connections, and to assist in testing.

B. Tests and Inspections:

1. Leak Test: After installation, charge system and test for leaks. Repair leaks and retest until no leaks exist.

2. Test and adjust controls and safeties. Replace damaged and malfunctioning controls and equipment.

3.6 PROTECTION

A. Protect drains during remainder of construction period to avoid clogging with dirt or debris and to prevent damage from traffic or construction work.

B. Place plugs in ends of uncompleted piping at end of each day or when work stops.

END OF SECTION

No Text On This Page

SECTION 23 05 93 – TESTING, ADJUSTING, AND BALANCING FOR HVAC – IG/PC

PART 1 GENERAL

1.01 SUMMARY

A. The Contractor shall provide all labor, materials, equipment, incidentals, and appurtenances as shown, specified, and required to perform testing, adjusting and balancing of all Heating, Ventilation, and Air Conditioning Systems, as specified and/or required for proper operation.

1.02 PAYMENT

A. There is no separate payment provision for this Section.

1.03 RELATED SECTIONS

1.04 REFERENCES

A. Abbreviations and Acronyms:

1. AABC Associated Air Balance Council
2. NEBB National Environmental Balancing Bureau
3. HVAC Heating, Ventilating, Air Conditioning
4. TAB Testing, Adjusting, and Balancing

B. Reference Standards:

1. ASHRAE Handbook – Fundamentals.
2. AABC-MN-1 – National Standards for Testing and Balancing Heating, Ventilating, and Air Conditioning Systems (1989).
3. NEBB-01 – Procedural Standards for Testing Adjusting Balancing of Environmental Systems (1991).
4. AABC 81266 – National Standards for Field Measurements, Total System Balance, Air Distribution, Hydronics Systems, Volume One.

1.05 DESCRIPTION

A. This Section includes requirements for the testing, adjusting, and balancing for HVAC Systems. In addition:

1. HVAC equipment shall be completely installed and in continuous operation as required to accomplish the test, adjust, and balance work specified.
2. Reports shall be certified by the testing engineer that the methods used and the results achieved are as specified.
3. Should corrective measures caused by faulty installation require retesting, adjusting and balancing, such work shall be performed at no additional expense to the City.

1.06 QUALITY ASSURANCE

A. Balancers Qualifications:

1. Balancer shall have certification by NEBB, AABC, or SMACNA, or demonstrate that the standards and experience required for certification are possessed, all to the satisfaction of the Engineer.

1.07 SUBMITTALS

A. Submittals shall comply with the requirements of the Contract Documents. In addition, submittals shall include, but not be limited, to:

1. Action Submittals:

a. Contractor shall submit one (1) copy of the standard procedure manual, published by the TAB organization affiliated with the Contractor, to the Engineer for the Engineer's records.

b. Prior to testing all systems, the Contractor shall submit a test procedure for each and every system to undergo TAB as part of the Work.

c. Report Forms:

1) Submit specimen copies of report forms for Engineer's approval.

2) Forms shall be 8½-in. x 11-in. paper for loose leaf binding, with blanks for listing of the required test ratings and for certification of report.

3) Reports shall be on the organizations approved forms imprinted with the company's name.

4) Certified report outlining procedure used to balance the system and the types of measuring devices used.

d. Test results shall be submitted on approved forms in a typed format.

e. Submit certified copies of required test reports to the Engineer for approval.

B. Information Submittals:

1. Data Sheets:

a. Submit samples of data sheets on each item of equipment for approval.

b. Submit data sheets on each item of testing equipment required.

c. Include name of device, manufacturer's name, model number, latest date of calibration, and correction factors.

2. Balancer's Qualifications:

a. Submit work experience or resume and professional background on employee who will directly supervise the TAB Work.

b. Licenses held by the balancer.

c. Submit a record of at least five (5) years' experience in the testing and balancing contracting industry, engaged in HVAC work, including but not limited to:

1) Names of projects.

2) Approximate contract cost of the TAB Work.

3) Amount of area that was tested, adjusted, and balanced for each project.

1.08 DELIVERY, STORAGE, AND HANDLING

A. Not Used

1.09 INCIDENTAL PARTS, SPECIAL TOOLS, AND SUPPLIES

A. Not Used

1.10 SPECIAL WARRANTY PROVISIONS / GUARANTEE PERIODS

A. Not Used

PART 2 PRODUCTS

2.01 MANUFACTURERS

A. Not Used

2.02 MATERIALS / EQUIPMENT

A. Instruments:

1. General:

a. Contractor shall provide all necessary instrumentation, tools, ladders, etc. to complete all air and hydronic balancing tests and adjustments.

b. Instrumentation shall be in accordance with NEBB, AABC, or SMACNA requirements and shall be calibrated to the accuracy standards demanded by these organizations.

c. Flow-measuring hoods (manufactured, not fabricated) shall be acceptable for measurement of ceiling diffuser performance only.

d. Contractor shall assume full responsibility for safe keeping of all instrumentation during the course of work.

B. Air balance instruments:

1. Provide all velometers, anemometers, pitot tubes, differential air pressure gages, manometers, hook gages, static pressure probe units, etc. as may be required to perform all air balance tests of HVAC equipment, ducts, registers, grilles, etc.

C. System performance measuring instruments:

1. Provide insertion thermometers, sling psychrometers, tachometers, revolution counters, clamp-on volt-ammeter recorders, and other instruments as required to measure all facets of the complete HVAC system performance.

2.03 FABRICATION / ASSEMBLING / FINISHES

A. Not Used

2.04 SOURCE QUALITY CONTROL / SHOP TESTS

A. Not Used

PART 3 EXECUTION

3.01 EXAMINATION / PREPARATION

A. Not Used

3.02 IMPLEMENTATION

A. General:

1. All TAB of air systems shall be performed in compliance with the standard procedure manual published by the TAB organization affiliated with the Contractor and submitted to the Engineer for approval as specified herein. Contractor shall be solely responsible for the protection and safeguarding of its work and shall provide every protection against accidents, injury, and damage to persons and property.
2. Contractor shall keep dust, dirt, and debris to an absolute minimum and reinstall all removed ceiling components to their original positions at the end of each day.
3. Contractor shall be fully responsible for removal and reinstallation of ceiling system and replacement of any component damaged.
4. Air systems shall be tested, adjusted, and balanced with clean filters.

B. Inspection:

1. The Contractor shall conform to the requirements of this Contract Equipment Check:
   a. Verify proper overload heater sizes.
   b. Verify function of safety and operating controls.
   c. Verify proper operation of equipment.
   d. Report on inspection, observation and checking procedures.

C. Testing of Equipment, and Duct:

1. General:
   a. The Contractor shall be bound by this Section to test and adjust all systems and accessories covered under this Contract.
   b. The Contractor shall also comply with the requirements of testing as outlined in the individual sections.
   c. Furthermore, the Contractor shall operate and maintain these systems as per the requirements of the Contract Documents, and shall leave them in good working order.
   d. The Contractor shall provide all necessary equipment and labor for this work.
2. All ductwork systems including air outlets shall be tested, adjusted and balanced for within limits of the required airflows as indicated on the Contract Drawings.
3. Overall System Test:
   a. After all final tests have been performed on all equipment and on all sub-systems installed under this Contract, including the testing of all controls specified in other Sections, and after the results from all such testing have been accepted, the Contractor shall test the overall system by demonstrating its ability to respond properly to normal changes in controlled parameters, as well as to system upsets.

b. To facilitate this, the Contractor shall make available a minimum of two (2) personnel, thoroughly familiar with the systems and equipment installed under this Contract, for a minimum of seven (7) days to test the system by changing controlled parameters and generating system upsets as directed by the Engineer, and demonstrating that the sequential action appropriate to the particular change or upset occurs automatically.

c. Where actual change or upset is not feasible, the Contractor shall simulate the change or the upset.

d. Controlled parameter changes shall include, but not necessarily be limited to, any change in temperature, pressure, flow rate, fluid level, load, etc., which should result in an automatic change in the position of a control valve or control damper, in the output rate of a piece of equipment, in the normal start-up or shutdown of equipment, etc.

e. The change in the state of the controlled device or equipment shall be shown to result in a corrective action on the controlled parameter.

f. Upsets shall include, but not necessarily be limited to, any condition which should cause annunciation of an alarm, safety shutdown of equipment, startup of standby equipment, closing of fusible-link devices, lifting of relief valves, etc.

g. The Contractor shall immediately restore to its original state any safety device, the state of which has been changed by its having been tested.

4. Contractor shall immediately correct any system deficiency that should occur during testing.

5. After the overall system testing has been completed, and after all final adjustments have been made, the Contractor shall operate and maintain all new systems and equipment, site-wide, associated therewith, for a period of thirty consecutive days.

   a. During this period all normal maintenance (filter replacements, strainer cleaning, periodic checks of safety devices, datalogging, etc.) shall be performed by the Contractor.

   b. If, during this period, any work beyond routine maintenance of equipment and materials installed under this Contract, should be required to maintain proper operation of the overall system, the elapsed time shall be forfeited, and a new thirty day period shall commence following the completion of the corrective action.

D. Balancing and Adjusting:

1. In addition to any other reference to balancing and adjusting specified elsewhere in these Section, the Contractor shall be bound by this portion of the Section to balance, adjust and leave in good working order all systems and accessories covered under this Contract.

2. The Contractor shall procure the services of an independent balancing and testing agency which specializes in the balancing and testing of heating, ventilating and air conditioning systems to balance, test and adjust all systems installed under this Section.

3. The Contractor shall advise the Engineer at least two weeks in advance of the date scheduled for balancing to commence; at the Engineer's discretion, the balancing shall be conducted in the Engineer's presence.

4. At least three (3) months prior to the commencement of balancing, the Contractor shall forward a detailed explanation of the balancing procedure to the Engineer for review. In general, the method shall conform to those specified by the AABC or SMACNA.
5. Before beginning to balance the air systems the Contractor shall check, in the presence of the Engineer, all filters and coils for cleanliness, dampers (automatic, volume and fire) for correct position, all fans for proper rotation, and temperature controls for minimum completeness to allow for proper balancing.
    a. If any of the above or other conditions are found which would not allow for proper balancing the Contractor shall take the necessary corrective actions, at own expense, before balancing begins.
6. All heating and ventilating, systems shall be balanced by the Contractor by adjustment of dampers, fan sheaves, apparatus and air outlets to provide the air quantities indicated on the Contract Drawings. If necessary, adjustments of air outlets shall be made to eliminate drafts.
7. Balancing for all air systems shall be accomplished in a manner to first minimize throttling losses, then fan speed shall be adjusted to meet design conditions. All air outlets and fans shall be balanced within 5% of the design capacity.
8. Fan Belt Deflection: No less than ¼-in. or more than a ½-in..
9. After the systems have been balanced, the Contractor shall submit and certify to the City, a list containing the following minimum information for air outlets and equipment:
    a. Room or facility served.
    b. Size, quantity and model of air outlet or equipment.
    c. Type of air outlet or equipment.
    d. Air flow indicated on Contract Drawings.
    e. Air flow measured.
    f. Fan cfm indicated on the Contract Drawings.
    g. Fan cfm measured.
    h. Fan motor running amps.
10. The Contractor shall advise the Engineer two days in advance of the start-up of the heating system. To be ready for start-up, all related equipment must be "off", and the system must be filled, purged, balanced and cool.
11. The Contractor shall record the following:
    a. System temperature.
12. The Contractor shall start heating equipment. Once system design temperature has been reached, and system is in equilibrium, again record the air temperatures in and out from electric unit heaters .
13. The Contractor shall submit all recorded data to Engineer for review.
14. The Contractor shall adjust any or all equipment which, in the City's opinion, is not set within acceptable limits of ±5%.

E. Automatic Control Systems:

1. In cooperation with the control manufacturer's representative and as per the requirements of Section 40 80 82, PMCS Startup and Field Testing, set and adjust automatically operated devices to achieve required sequence of operations.
2. Testing organization shall verify all controls for proper calibration and list those controls requiring adjustment by control system installer.

F. Marking Of Setting:

1. Following approval of TAB Verification Report, the setting of all HVAC adjustment devices including valves, and manual dampers shall be permanently marked by the TAB Specialist so that adjustment can be restored if disturbed at any time.

G. Identification Of Test Ports:

1. The TAB Specialist shall permanently and legibly identify the location points of duct test ports. If the ductwork has exterior insulation, the identification shall be made on the exterior side of the insulation. All penetrations through ductwork and ductwork insulation shall be sealed to prevent air leakage or to maintain integrity of vapor barrier.

3.03 FIELD TESTING / QUALITY CONTROL

A. Not Used

3.04 STARTUP / DEMONSTRATION

A. Not Used

3.05 ADJUSTING / PROTECTION / CLEANUP

A. Not Used

END OF SECTION

No Text On This Page

SECTION 23 31 14 – METAL DUCTS AND ACCESSORIES – IG/PC

PART 1 GENERAL

1.01 SUMMARY

A. The Contractor shall provide all labor, materials, equipment, incidentals, and appurtenances as shown, specified and required, to furnish, install, and test all metal ductwork, with auxiliary equipment and accessories, complete and operational.

B. The following schedule(s), attached after the end of section designation, are a part of this Section:

1. Schedule 23 31 14-1, Schedule of Metal Duct Construction Standards.

1.02 PAYMENT

A. There is no separate payment provision for this Section.

1.03 RELATED SECTIONS

A. Section 23 05 93 – Testing, Adjusting, and Balancing for HVAC.

1.04 REFERENCES

A. Reference Standards:

1. ASHRAE Latest Edition.
2. ASTM E84 Standard Test Method for Surface Burning Characteristics of Building Materials
3. ASTM E437 Standard Specification for Industrial Wire Cloth and Screens (Square Opening Series)
4. ASTM A653 Standard Specification for Steel Sheet, Zinc-Coated (Galvanized) or Zinc-Iron Alloy-Coated (Galvannealed) by the Hot-Dip Process
5. SMACNA HVAC Duct Construction Standards.
6. SMACNA Rectangular Industrial Duct Construction Standards
7. SMACNA Seismic Restraint Manual - Guidelines for Mechanical Systems.
8. NFPA 90A Standard for the Installation of Air-Conditioning and Ventilating Systems.
9. UL 181 Standard for Factory-Made Air Ducts and Air Connectors.
10. UL 214 Standard for Tests for Flame-Propagation of Fabrics and Films.
11. UL 555 Standard for Fire Dampers

1.05 DESCRIPTION

A. This Section includes requirements for providing metal ducts and accessories in accordance with applicable standards and regulations. In addition:

1. Metal duct and accessories shall include all painting, coating, lining, gaskets, harnesses, bolts, nuts, and other appurtenances and material required to provide and assemble the lines.

1.06 QUALITY ASSURANCE

A. Requirements of Regulatory Agencies: Comply with applicable provisions of regulatory agencies below and others authorities having jurisdiction.

1. Underwriters Laboratories, Inc.
2. National Fire Protection Association.
3. National Electrical Code.
4. Local and State Building Codes and Ordinances:
   a. New York City Building Code.
   b. New York State Uniform Fire Prevention and Building Code.

B. Qualifications of Manufacturer:

1. Engage a single firm, with undivided responsibility for performance and other requirements and components of the metallic ductwork.
2. Engage a firm which can show successful experience in the fabrication and erection for metallic ductwork systems of scope and type similar to the required Work.

C. Qualifications of Installer:

1. The Installer shall have at least five (5) years' experience in the installation of the Work specified herein. The Installer shall employ only tradespersons with specific skills and experience in this type of Work.
2. The Contractor shall have undivided responsibility as a single firm for performance and other requirements for the installation of the Work specified herein.

1.07 SUBMITTALS

A. Submittals shall comply with the requirements of the Contract Documents. In addition, submittals shall include, but not be limited to:

1. Action Submittals:
   a. The Contractor shall submit the following Shop Drawings and material specifications for the approval of the Engineer:
      1) ¼-in. scale duct layouts, complete with.
         a) Dimensions.
         b) Details of construction.
         c) Details of installation, hanger details and spacing.
      2) Manufacturer's literature, illustrations, specifications, and Engineering data for the following items, including weights of all component parts:
         a) Registers, grilles, and diffusers.
         b) Louvers.
         c) Fire Dampers (UL Listed), including:
            (1) Closing mechanisms.
            (2) Fusible link operating temperature.
            (3) Installation details.

d) Access Doors.

e) Duct Access Doors.

f) Flexible connections.

g) Duct sealants.

3) Details of sheet metal safing construction and installation.

4) An air outlet schedule indicating room name and location of each outlet. Cross reference contract designation and manufacturer's model number or name.

5) Details of construction and material to the Engineer for all access doors to ensure the access door material matches the appearance of the finished work.

b. Test Reports: Submit the following test reports for the following:

1) UL Label, Fire Dampers.

2) Volume Damper leakage tests from an AMCA-approved testing laboratory.

2. Information Submittals:

a. Contractor shall submit an affidavit stating that all stainless steel accessories (including, but not limited to: screws, hangers, supports, etc.) for stainless steel ductwork are Type 316 stainless steel.

1.08 DELIVERY, STORAGE, AND HANDLING

A. The Contractor shall deliver materials provided under this Section in accordance with the requirements of the Contract Documents. In addition:

1. All ductwork shall arrive on site fully fabricated, and not in two halves for field fabrication.

B. The Contractor shall store and handle materials provided under this Section in accordance with the requirements of the Contract Documents.

1.09 INCIDENTAL PARTS, SPECIAL TOOLS, AND SUPPLIES

A. The Contractor shall provide incidental parts and special tools necessary to service, disassemble, repair and adjust the materials and products provided under this Section, and as per the requirements of the Contract Documents. In addition, furnish the following incidental parts:

1. Twelve (12) incidental fusible links.

B. Tools: Provide standard and special tools and supplies necessary to service, disassemble, repair and adjust the products.

1.10 SPECIAL WARRANTY PROVISIONS / GUARANTEE PERIODS

A. All materials and products provided under this Section shall be covered by a five (5) years manufacturer warranty, which shall commence upon Substantial Completion, and shall cover 100% of the parts and labor involved in repair or replacement.

PART 2 - PRODUCTS

2.01 MANUFACTURERS

A. Ductwork Accessories:
   1. Transverse Duct Connections:
      a. Ductmate 35® System as manufactured by Duct Mate Industries Inc
      b. Duro Dyne
      c. Steel Metal Connector
      d. Or approved equal.
   2. Volume Dampers:
      a. Ruskin Co.
      b. American Warming and Ventilating (AWV)
      c. Ductmate
      d. Or approved equal.
   3. Rectangular Fire Dampers:
      a. Air Balance, Inc
      b. Ruskin Co.
      c. Greenheck
      d. Or approved equal.
   4. Air Volume Extractors:
      a. Hart and Cooley
      b. Titus
      c. Greenheck
      d. Or approved equal.

B. Registers, Grilles, and Diffusers:
   1. Supply Registers:
      a. A-J Manufacturing Co
      b. Carnes Company
      c. Titus
      d. Or approved equal.
   2. Air Turning Devices:
      a. AJ Manufacturing Co., Inc.
      b. Carnes Company
      c. Duro Dyne
      d. Or approved equal.

3. Exhaust and Return Registers:
    a. A-J Manufacturing Co., Inc.,
    b. Carnes Company
    c. Titus
    d. Or approved equal.
4. Exhaust and Return Grilles:
    a. A-J Manufacturing Co., Inc.,
    b. American Warming and Ventilating (AWV)
    c. Carnes Company
    d. Or approved equal.
5. Transfer Grilles:
    a. A-J Manufacturing Co., Inc., Kansas City, MO.
    b. American Warming and Ventilating (AWV), Drive Holland, OH
    c. Carnes Company, Verona, WI
    d. Or approved equal.

C. Louvers:
    a. Carnes, Verona
    b. Greenheck, Schofield
    c. Ruskin, Kansas City
    d. Or approved equal.

2.02 MATERIALS / EQUIPMENT

A. Metal Ductwork:
1. General:
    a. All work shall be constructed and installed properly in accordance with the recommendations given in the latest edition of SMACNA HVAC Duct Construction Standards and SMACNA Rectangular Industrial Duct Construction Standards.
    b. All ductwork shall be constructed in accordance with Schedule 23 31 14-1, Schedule of Duct Construction Standards, located after the "End of Section" designation.
2. Materials:
    a. All ductwork shall be constructed of Type 316 stainless steel and all duct accessories (e.g., air outlets, hardware, and fasteners, etc.) shall also be of Type 316 stainless steel, except as follows:
        1) Provide galvanized steel (G90, as per ASTM A653 coating) only where explicitly shown on the Contract Drawings. Air devices and ductwork accessories for galvanized ductwork shall be aluminum.

2) Provide aluminum (with 3003 ductwork H-14 alloy and temper) only where explicitly shown on Contract Drawings. Air devices and ductwork accessories for aluminum ductwork shall be aluminum.

3. Stainless Steel Ductwork:

   a. Stainless steel duct sheet thicknesses shall be two (2) gauges heavier than the thickness specified for galvanized steel duct in the SMACNA Duct Construction standards.

4. Connections:

   a. The transverse duct connections shall be bolted, gasketed connections.

5. Duct Elbows:

   a. Duct elbows shall have a minimum centerline radius of 1½ times the width of the duct.

B. Ductwork Accessories:

1. Hangers and Supports:

   a. All ductwork shall be securely hung and anchored to the building structure.

      1) Unless otherwise explicitly shown on the Contract Drawings, hangers and stiffeners for ducts shall conform to all the recommendations and requirements given in the SMACNA HVAC Duct Construction Standards and the SMACNA Seismic Restraint Manual - Guidelines for Mechanical Systems.

      2) Unless otherwise specified herein, hangers and supports shall also conform to all the requirements of Section 40 05 07, Hangers and Supports for Process Piping.

   b. Ducts shall be supported on trapeze hangers with angles or rods – the use of strap hangers, sheet metal duct hangers, and/or straps is prohibited.

   c. Hanger rod thickness shall be as follows:

      1) For all ducts with half-perimeter up to 72-in.: Hanger rods shall be minimum ⅜-in. thick.

   d. For all ducts with half perimeter larger than 72 in.: Hanger rods shall be minimum ½-in. thick. A pair of rods shall be provided at each duct support point.

   e. Support shall also be furnished at each fitting.

   f. The maximum hanger spacing shall be as follows:

      1) For ducts with half perimeter up to 72-in.: 8 ft

      2) For ducts with half perimeter larger than 72-in.: 6 ft

   g. All hangers, rods, supports, bolts, nuts, washers, inserts, and appurtenances shall be Type 316 stainless steel, except for use on galvanized steel ductwork, when such may be of galvanized steel construction.

   h. Seismic Requirements:

      1) All piping and ductwork shall be provided with seismic restraints in accordance with the SMACNA Seismic Restraint Manual – Guidelines for Mechanical

Systems and in accordance with the New York City Building Code and referenced Uniform Building Code requirements.

2) Piping and ductwork shall be supported to withstand seismic forces anticipated in seismic zones 2A.

2. Sleeves:
   a. Where ductwork passes through masonry walls, partitions, or floors, provide sleeves.
   b. Material:
      1) For stainless steel and aluminum ductwork: Provide sleeves of minimum 16 gauge, Type 316 stainless steel.
      2) For galvanized ductwork: Provide sleeves of galvanized steel.
3. Volume Dampers:
   a. Volume dampers shall comply with SMACNA Standards.
   b. Materials:
      1) For stainless steel ductwork: Provide manual volume dampers of Type 316 stainless steel construction.
      2) For aluminum and galvanized steel ductwork: Provide manual volume dampers of and aluminum construction.
   c. Blades: Opposed blades, vinyl edge seals.
   d. Provide outside handle, quadrant, and approved position indicator and locking device.
   e. Performance:
      1) Damper Leakage: Not more than 16 cfm/ft2 at 4-in. W.G.
4. Self-Acting Dampers:
   a. Provide adjustable, counter-balanced type, with fabricated blades set in frame.
   b. Materials:
      1) For stainless steel ductwork: Provide self-acting dampers and frames of Type 316 stainless steel construction.
      2) For aluminum and galvanized steel ductwork: Provide self-acting dampers and frames of aluminum construction.
5. Fire Dampers (Dynamic Type):
   a. Provide fusible link fire dampers and access doors where indicated on the Contract Drawings and in accordance with the New York City Building Code. The fire dampers shall conform to all requirements of the latest edition of NFPA 90A and shall have a 1½ hr or 4 hr standard fire protection rating in accordance with the requirements of UL 555. All fusible links shall be UL rated at 165°F.

b. Materials:

1) For stainless steel and aluminum ductwork: Provide fire dampers of Type 316 stainless steel construction, with Type 316 stainless steel blades, interlocking joints, and fusible links.

2) For galvanized ductwork: Provide fire dampers of galvanized steel, with galvanized blades, interlocking joints, and fusible links.

3) Collars, angles, and hardware used for installing stainless steel fire dampers shall be Type 316 stainless steel.

c. Fire dampers shall be of the curtain type with interlocking blades set in a one-piece frame.

d. Fire dampers shall be suitable for installation in the vertical or horizontal position.

e. All fire dampers shall be Dynamic Rated for closure against airflow in the following six installation configurations:

1) Vertical Mount (Horizontal Airflow): Ducted and unducted.

2) Horizontal Mount (Airflow Up): Ducted and unducted.

3) Horizontal Mount (Airflow Down): Ducted and unducted.

f. Each fire damper shall be rated to close against maximum design airflow at its installed location with a 10% safety factor and against 8-in. w.g. maximum pressure across the closed damper.

g. Label:

1) All fire dampers shall have UL Label attached.

2) Label Materials:

a) For stainless steel and aluminum fire dampers: Provide label of Type 316 stainless steel construction.

b) For galvanized steel fire dampers: Provide label of galvanized steel construction.

3) Label shall have a fire rating of, at a minimum:

a) 1½ hrs for fire separations (walls, floors, and partitions) rated at 2 hrs.

b) 3 hrs for fire separations (walls, floors and partitions) rated at 3 hrs and above.

6. Sheet Metal Safing:

a. Provide insulated aluminum sheet metal safing to close off and seal airtight all unused areas behind louvers.

b. Insulation shall be 2-in. thick rigid fiberglass, permanently sandwiched between two 16 ga. minimum metal sheets.

c. Insulation shall be secured to the sheets with adhesive.

d. The sheets, channels, and hardware used for the sheet metal safing shall be Type 316 stainless steel.

e. All edges of the panels shall be provided with a 16 ga. minimum channel secured in place with sheetmetal screws 6-in. on centers.

f. Insulated sandwich panels shall be removable type with maximum space of 18 in., and supported on 3-in. X 3-in. X ¼-in. angle. Provide intermediate supports.

7. Duct Access Doors:

a. Provide gasketed, cam lock cover type access doors in accordance with SMACNA Standards.

b. Construction:

1) Duct access doors shall be rigid and airtight, and provided with neoprene gaskets, hinges, and sash locks.

c. Materials: Each access doors shall be of the same material as the duct or duct accessory to which said access door shall be affixed.

d. Unless otherwise shown on the Contract Drawings or specified herein, access doors shall be of the following sizes:

1) For duct sizes under 14-in.: Provide 12-in. x 6 in. access doors.

2) For ducts sized 14-in.: Provide 12-in. x 12-in. access doors.

3) For duct sizes between 14-in. and 36 in.: Provide 21-in. x 14-in. access doors.

4) For duct sizes between 36-in. and 60-in.: Provide 25-in. x 17- in. access doors.

5) For ducts larger than 60-in.: Provide quantity two (2) 25-in. x 17 in. access doors.

e. Access doors for fire dampers shall be stenciled "FIRE DAMPER ACCESS" with minimum ½-in. high letters.

8. Flexible Connections:

a. Provide flexible connections in accordance with SMACNA HVAC Duct Construction Standards.

1) Flexible connections shall be for a pressure classification of 3 in. w.g.

b. Materials:

1) For galvanized steel ductwork: Provide 16 ga., 3-in. wide galvanized steel strip flexible connections.

2) For stainless steel ductwork: Provide Type 316 stainless steel flexible connections.

3) For aluminum ductwork: Provide 0.080-in. thick, 3-in. wide aluminum strip flexible connections.

9. Vibration Isolation Flexible Connections:

a. Provide flexible connections for preventing the transmission of vibrations through the ductwork at the locations specified herein.

b. Materials: Vibration isolation flexible connections shall be neoprene-impregnated fabric collars with cemented seams fastened with straps and bolts of the same material as the connecting ductwork.

10. Gravity Backdraft Dampers
    a. Provide gravity backdraft dampers located in ductwork:
    b. Materials: Provide gravity backdraft dampers of the same material as the ductwork in which they are installed. In addition:
        1) Tie Rods: Shall be of aluminum 0.081 ga..
        2) Louver Arms: Shall be of aluminum 0.081 ga..
        3) Bumpers: Shall be waterproof felt.
        4) Bearings: Shall be stainless steel or brass.
    c. Construction:
        1) Multiple, interlocked blades mounted in frame.
        2) Felt gasketed blade edges.
        3) Tie rod connecting each blade.
        4) Counterweights or adjustable spring attached to tie rods.
        5) Metal frame.
11. Bird Screens and Frames:
    a. Bird screens shall conform to ASTM E437, Type I, Class 1, 2 by 2 mesh, 0.031-in. diameter stainless steel wire.
    b. Materials: Type 316 Stainless Steel.
    c. Frames shall be removable type stainless steel construction.
12. Hardware:
    a. Materials:
        1) All fastening devices used for aluminum and stainless steel ductwork and accessories shall be Type 316 stainless steel.
        2) All fastening devices used for galvanized and aluminum ductwork and accessories shall be galvanized.
        3) All gasketing material shall be butyl.

C. Registers, Grilles, and Diffusers:
1. General:
    a. Register, grille, and diffusers units shall distribute the volume of air (cfm) specified and/or as shown on the Contract Drawings.
    b. Outlets for diffusion, spread, throw, and noise level shall be as required for specified performance.
        1) Performance shall be certified according to ASHRAE 70.
        2) Inlets and outlets shall be sound rated and certified according to ASHRAE 70.
    c. Where the inlet and outlet openings are located less than 7 ft above the floor, they shall be protected by a grille or screen according to NFPA 90A.

d. Materials:

1) For stainless steel ductwork: Register, grille, and diffuser units shall be of Type 316 stainless steel construction.

2) For aluminum and galvanized steel ductwork: Register, grille, and diffuser units shall be of aluminum construction.

e. Volume Dampers:

1) Diffusers and registers shall be provided with volume damper with accessible operator, unless otherwise indicated; or if standard with the manufacturer, an automatically controlled device will be acceptable.

2) Volume dampers shall be opposed blade type for all diffusers and registers, except linear slot diffusers.

a) Linear slot diffusers shall be provided with round or elliptical balancing dampers.

2. Exhaust and Return Registers:

a. Exhaust and return registers shall be provided complete with:

1) Fixed vertical face bars, set straight.

2) Key-operated opposed blade damper.

3. Exhaust and Return Grilles:

a. Exhaust shall be provided complete with:

1) Fixed vertical face bars, set straight.

4. Transfer Grille Assembly:

a. Wall-mounted grille assemblies shall consist of two (2) grilles, installed flushed to each side of wall.

b. A fire damper shall be installed between the grilles when located in fire rated walls.

1) The fire damper shall consist of a fully adjustable, key operated opposed blade damper with a spring loaded fusible link assembly and be of Type 316 stainless steel construction.

2) The fusible link shall be UL rated at 160°F.

c. The entire transfer grille assembly shall conform to the latest edition of the NFPA 90A.

d. Materials:

1) All transfer grille assemblies shall be of Type 316 stainless steel.

a) dimension.

2) Heavy gauge extruded aluminum end borders and mitered corners shall be provided to close off the ends of the diffusers.

3) Opposed blade damper shall be constructed of heavy gauge aluminum. Damper must be operable from the face of the diffuser.

D. Louvers:

1. General:

   a. Furnish and install louver as hereinafter specified where shown on plans or as described in schedules. Louver shall be stationary drainable type with drain gutters in each blade and downspouts in jambs and mullions.

   b. Stationary drainable blades shall be contained within a 4” frame.

   c. Louver components (heads, jambs, sills, blades, and mullions) shall be factory assembled by the louver manufacturer.

   d. Louver sizes too large for shipping shall be built up by the contractor from factory assembled louver sections to provide overall sizes required.

   e. Louver design shall incorporate structural supports required to withstand a wind load of 25lbs. Per sq. ft. (equivalent of a 100 mph wind-specifier may substitute any loading required).

2. Material:

   a. Stationary louvers shall be formed from not less than 2.34mm(0.092inch) 13 gauge Type 304 stainless steel with number 2B finish meeting ASTM A666 Sheet, Strip, Plate and Flat Bar for Structural and Architectural Applications (formally A177 and A412).

3. Stainless Steel Louver:

   a. Form 4” (100mm) deep frames with mitered or coped members, with continuously welded or riveted and soldered joints.

   b. Set blades at 45 degrees unless otherwise indicated. Form ends of the blades flat against frame jamb and weld or rivet and solder joints to ensure that joints will be watertight.

   c. Reinforce units with concealed plates, angles, tees or other shapes to form a rigid unit. Sills and frames shall be of same material and finish as adjoining louvers.

4. Stainless Steel Louver Screen:

   a. Fabricate removable screens frames of the same material and finish as the louvers.

   b. Locate screens on the inside face of the louver, unless otherwise indicated.

   c. Secure screens to the louver frames with machine screws at each corner spaced not more than 305mm on center.

   d. Screens shall be ASTM A666 Type 304 stainless steel, 19mm #9 Type II Flattened Diamond Mesh.

2.03 FABRICATION / ASSEMBLING / FINISHES

A. Stainless Steel Ductwork:

1. All stainless steel ductwork shall be shop fabricated in sections with welded flanged ends.

2. No field welding of stainless steel ductwork shall be permitted.

3. Welding equipment and electrodes shall be of a type specifically suited for welding light gauge Type 316 stainless steel to provide consistently good quality welds.

2.04 SOURCE QUALITY CONTROL / SHOP TESTS

A. Not Used

PART 3 - EXECUTION

3.01 EXAMINATION / PREPARATION

A. Field Measurements:

1. Take field measurements where required prior to installation to ensure proper fitting of Work.

3.02 INSTALLATION

A. Metal Ductwork:

1. All ductwork shall conform accurately to the dimensions shown on the Contract Drawings, with the exception that:

   a. Ductwork shall be as shown on the Contract Drawings, subject to such modifications as may be necessary to suit field conditions to clear any obstruction or conflicts with other equipment.

2. All ductwork shall be straight and smooth on the inside with neatly finished joints, and shall not be decreased at any point to avoid obstructions.

3. No piping, conduit, or structural work shall be installed in or through any ductwork.

4. All ductwork shall be run as close as possible to structural members, walls, and ceilings.

5. Where existing walls, floors, or roofs must be penetrated, Contractor shall neatly cut the required openings and patch the existing work to provide a neat and finished appearance.

6. Ductwork shall be installed so as to preclude the possibility of vibration under all operating conditions.

7. Install all ductwork and accessories to provide a system free from buckling, warping, breathing, or vibration.

8. Where required, and as shown on the Contract Drawings, the Contractor shall provide blank off baffles to eliminate drafts caused by nearby obstructions.

B. Ductwork Joints:

1. After the installation is completed, the Contractor shall seal all joints.

2. Tape and seal all joints as per SMACNA Duct Construction Standards.

3. Sealants and tape shall have the following ratings:

   a. Flame Spread Rating, as per ASTM E84: ≤ 25

   b. Smoke Developed Rating: ≤ 50

4. Flanged duct joints shall be 0.25-in Butyl gasketed and bolted together with stainless steel (Type 316) bolts, nuts, washers and lock washers.

5. All metal duct joints shall be airtight with no leakage.

C. Coordinate all air outlets for compatibility with ceiling system.

D. Sleeves:

1. Caulk sleeves airtight with fire resistant sealant between sleeve and ductwork in accordance with Section 07 92 00, Joint Sealants.
2. Manual volume dampers larger than 11-in. in any dimension shall be opposed blade type.
3. The damper blades shall be operated by a lockable dial regulator and may be set in any position.
   a. The dial regulators shall be marked so that the "open" and "shut" positions are clearly identified.
   b. The dial regulators on insulated ductwork shall be mounted on an elevated platform which will finish flush with the surface of the insulation.
4. Manual volume dampers shall be located at accessible points and wherever possible some distance from a duct transition or fitting.
5. Care shall be taken during installation to make certain that sheet metal fasteners do not protrude into the duct and interfere with damper operation.
6. Install volume dampers where indicated on the Contract Drawings and as required to facilitate accurate volume control. Volume dampers specified with air devices shall be installed in addition to those shown on the Contract Drawings. In addition, dampers shall be installed in all of the following locations:
   a. Each branch duct take off, and
   b. In both ducts downstream of each trunk duct split.
   c. An additional volume damper shall be installed in duct stub to each air outlet for balancing of air volume.

E. Duct Access Doors:

1. Duct access doors shall be provided in all of the following locations for inspection and maintenance:
   a. Within working distance of (and on the fusible link side of) all fire dampers.
   b. Adjacent to all dampers.
   c. On the linkage side of all automatic dampers.
   d. At all other apparatus requiring service or inspection in the duct system.
2. Whenever space requirements are such that a hinged access door is impractical, a screw fastened lift-out door shall be provided instead.

F. Access Doors:

1. Provide access doors for all concealed valves, controls, test openings, duct access doors, and at all other locations requiring service, inspection, and/or adjustment of a concealed item. Behind finished work such as walls, plaster, and wood paneling, and in suspended ceilings which do not have removable panels. The access doors shall

match the appearance of the finished work in which they are installed and shall be of sufficient size to permit service, inspection, and/or adjustment of the concealed item.

G. Test openings:

1. The test openings shall be sealed by a screw cap and gasket, and shall be installed so that the insulation is not disturbed when the cover is removed.
2. The test openings shall be located as follows in all heating, ventilating, air conditioning systems:
   a. In the outside air duct adjacent to the unit.
   b. In the exhaust air duct adjacent to the unit.
   c. In the main supply duct on each unit.

H. Flexible Connections:

1. All expansion joints in ducts at building expansion joints shall be suitably supported at each end by support guides within 12-in. of joint.
2. All ducts at flexible connections with air handling equipment, and fans shall be supported at free end within 12-in. of flexible connection.
3. Provisions shall be made for supporting all ductwork, dampers, and other ductwork accessories, where necessary.

I. Vibration Isolation Flexible Connections:

1. Install vibration isolation flexible connections between the ductwork and all air moving equipment and at the building joints.
   a. Provide flexible connections at both the inlet and discharge of air all handling equipment.
2. Vibration isolation flexible connections shall not be painted or used to correct misalignment.

J. Fire Dampers:

1. Fire dampers shall be installed where shown on the Contract Drawings and where required by UL and authorities having jurisdiction, and shall be approved by local building codes and in accordance with the requirements of the NFPA.
   a. Two (2) fire dampers, rated at 1½ hours each, with one on each face of the fire separation or fire division, are required for fire separations having a 3-hr fire rating or above as per the New York City Building Code and Uniform Building Code requirements.
2. Fire dampers shall be secured to a Type 316 stainless steel collar with ¼-in. diameter stainless steel nuts and bolts with maximum spacing of 12-in. on center and a minimum of two (2) fastenings per side, beginning 2-in. in from the corners of the collar.
3. The collars shall be at a minimum the same gauge as the ductwork to which the collar is attached or 24 ga. thick (Type 316 stainless steel), whichever thickness is greater.
4. Retaining angles shall be installed on four sides of the collar and on both sides of the protected opening with a minimum of 1-in. overlap on the wall or floor.

a. The Type 316 stainless steel angles shall be a minimum of 1½-in. □ 1½-in. □ ⅛-in. and shall be fastened to the collar only – do not fasten angles to the wall or floor.

b. The retaining angles shall be increased in size to provide the minimum overlap of one inch on the wall or floor.

c. The angles shall be fastened to the collar with ¼-in. diameter stainless steel nuts and bolts with a maximum spacing of 6-in. on center and a minimum of two (2) fastenings per side, beginning 2-in. from the corners of the collar.

d. Where gas tight seals are required, the angles shall be fastened to the collar with a continuous weld and a sealant shall be installed between the angle and the wall or floor.

5. Clearance for expansion is required between the collar and the opening on the top and on each vertical side.

   a. The clearance shall be ⅛-in. per linear ft of sleeve, with clearance on the sides distributed equally and all vertical clearance on the top.

6. The ductwork shall be connected to the collar on each side of the wall or floor with a breakaway connection on all four sides of the collar.

   a. The distance from the wall or floor to the breakaway connection shall not exceed 6-in..

7. Provide firestopping at fire separations where fire dampers are installed.

8. Provide an access door in duct at each fire damper located in duct.

K. Contractor shall furnish and install sleeves for registers, grilles, and dampers mounted in the masonry, concrete plenums or shafts. Sleeves shall be 16 ga. Type 316 stainless steel.

L. Sheet Metal Safing:

1. Install safing to seal off remaining portions of shafts and louvers which are not covered by the plenums or equipment attached to the shaft or louver.

M. Louvers:

1. Louvers shall be installed in accordance with approved shop drawings and as shown.

2. Provide all necessary fastenings and anchors required to a complete installation.

3. Units shall be installed plumb, level and in proper alignment with adjacent work.

4. Form tight joints within work of this section. Fit exposed connections accurately.

5. Louvers shall be protected from damage from subsequent building operations.

6. Protect metal surfaces from corrosion or galvanic action by application of a heavy bituminous paint on surfaces, which shall be in contact with concrete, masonry or dissimilar metals.

3.03 FIELD TESTING / QUALITY CONTROL

A. Not Used

3.04 STARTUP / DEMONSTRATION

A. Not Used

3.05 ADJUSTING / PROTECTION / CLEANUP

A. Adjustment:

1. Set volume control devices for approximate positions in preparation for final testing and balancing.
2. Install fusible links in fire dampers and verify that dampers are in open position.
3. Start fan system and check for excessive leaks and vibration and correct.

B. Balancing:

1. Systems shall be completely tested, adjusted and balanced by a qualified engineer. A complete balancing procedure shall be submitted for approval. All equipment and connections required to balance the systems shall be provided.
2. All duct systems shall be balanced as specified in Section 23 05 93, Testing, Adjusting, and Balancing for HVAC.

C. Cleaning:

1. Remove all loose materials and obstructions from interior of ducts.
2. Remove debris and waste materials resulting from installation.

SCHEDULE 23 31 14-1

SCHEDULE OF METAL DUCT CONSTRUCTION STANDARDS(1,2)

Service:	**Pressure Classification: (in. W.G.)**	**Construction Standards:**
All ductwork on fan discharge side	+3	SMACNA HVAC Duct Construction Standards
All ductwork on suction side	-3	
Transfer air duct not connected to fan	±2	

Notes:

1. All accessories (including, but not limited to: turning vanes, air turning devices, manual volume dampers, motor operated control dampers, fire dampers, access doors, supports, angles, clamps, hangers, and hardware) shall be suitable for the pressure classification given above.
2. Ductwork Material Schedule: Refer to the Contract Drawings.

END OF SECTION

No Text On This Page

SECTION 23 34 00 – HVAC FANS - IG/PC

PART 1 - GENERAL

1.01 SUMMARY

A. The Contractor shall provide all labor, materials, equipment, incidentals, and appurtenances as shown, specified and required to furnish, install, and test all HVAC fans, complete and operational.

B. All HVAC fans shall be provided in accordance with the schedule shown on the Contract Drawings.

1.02 PAYMENT

A. There is no separate payment provision for this Section.

1.03 RELATED SECTIONS

A. Section 23 05 93 – Testing, Adjusting and Balancing for HVAC

1.04 REFERENCES

A. Abbreviations and Acronyms:

1. FRP Fiber Reinforced Plastic

B. Reference Standards:

1. AISI C1045 Medium Carbon Steel
2. AMCA 210 Laboratory Methods of Testing Fans for Ratings
3. AMCA 301 Methods for Calculating Fan Sounds Ratings from Laboratory Test Data.
4. ANSI S2.19, G6.3 Mechanical Vibration - Balance Quality Requirements Of Rigid Rotors
5. SMACNA Seismic Restraint Manual: Guidelines for Mechanical Systems

1.05 DESCRIPTION

A. This Section includes requirements for providing HVAC fans and accessories in accordance with applicable standards and regulations. In addition:

1. HVAC fans shall be furnished complete with all accessories, special tools, incidental parts, base attachments, mountings, anchor bolts and other appurtenances as specified and/or required for proper installation.

1.06 QUALITY ASSURANCE

A. Requirements of Regulatory Agencies: Comply with the applicable provisions of the standards organizations and regulatory agencies, below:

1. Underwriters Laboratories, Inc.
2. National Fire Protection Association.
3. National Electrical Code.
4. Local and State Building Codes and ordinances
   a. Building Code of the City of New York.

b. New York State Uniform Fire Prevention and Building Code.

B. Qualifications of Manufacturer:

1. All components of the HVAC fans shall be provided by the Contractor through a single HVAC fan vendor.

   a. The Contractor (through the HVAC fan vendor) shall have the sole responsibility of matching all components and providing equipment which functions together as a system.

2. The HVAC Fans shall be standard equipment of the manufacturer.

3. The HVAC fans shall be designed, constructed, and installed in accordance with the best practices of the trade, and shall operate satisfactorily when installed as shown on the Contract Drawings.

4. All fans shall be selected from performance curves and not from rating tables.

   a. Performance data for all fans shall be based on tests conducted in accordance with AMCA 210 and shall be licensed to bear the AMCA certified rating seal for both sound and air performance.

5. Provide units listed by the Underwriters Laboratories, Inc.

1.07 SUBMITTALS

A. Submittals shall comply with the requirements of the Contract Documents. In addition, submittals shall include, but not be limited to:

1. Action Submittals:

   a. Equipment specifications and data sheets identifying all materials used and methods of fabrication.

   b. Complete assembly, layout, installation, and foundation drawings with clearly marked dimensions.

   c. Fan performance curve indicating the operating point.

   d. Details of corrosion resistance coating.

   e. Weights of assembled units.

   f. Detailed specifications and data sheets for all accessories such as dampers, damper operators, disconnect switches, vibration isolators, etc.

   g. Example equipment nameplate data sheet.

   h. Schematic diagrams for electric and control systems showing wiring for individual equipment items and interconnecting wiring diagrams.

   i. Shop and field testing procedures.

   j. Deviations from the Contract Documents.

   k. Wiring diagrams with numbered terminal blocks for all external connections.

   l. Description of control system.

   m. Motor Tests and Data: For each motor submit a certified motor test data sheet or a certified motor data sheet from an electrically duplicate motor.

   n. List of recommended lubricants.

o. Operation and maintenance manuals

p. Fan manufacturer shall provide sound power ratings in the eight octave bands.

1) Sound power levels shall be based on AMCA Standard 301.

2) Sound power ratings shall be in decibels, referenced to 10-12 W.

2. Information Submittals:

a. Incidental Parts List

b. Special Tools List

c. Reports of Certified Shop Tests

d. AMCA Approval for Fan Ratings

e. List of Lubricants:

1) The manufacturer shall submit a list with a minimum of four (4) manufacturers' standard lubricants which may be used interchangeably for each type of lubricant required.

a) The Contractor shall utilize this list in preparing a comprehensive lubrication survey as described in the Contract Documents.

1.08 DELIVERY, STORAGE, AND HANDLING

A. The Contractor shall deliver materials provided under this Section in accordance with the requirements of the Contract Documents. In addition:

1. The cleaning, preservation, and packing of the HVAC fans for shipment shall be in accordance with the manufacturer's commercial practice.

B. The Contractor shall store and handle materials provided under this Section in accordance with the requirements of the Contract Documents. In addition:

1. The HVAC fans shall be handled in such a manner that they may be transported and unloaded without being over-stressed, deformed, or otherwise damaged.

2. The HVAC fans shall be protected from corrosion and deterioration and shall be stored in a dry area.

a. Materials stored outdoors shall be supported above ground surfaces on wood runners and protected with effective and durable waterproof covers approved by the Engineer.

3. Interiors shall be kept free from dirt and foreign matter.

1.09 INCIDENTAL PARTS, SPECIAL TOOLS, AND SUPPLIES

A. The Contractor shall provide incidental parts and special tools necessary to service, disassemble, repair, and adjust the equipment provided under this Section, as per the requirements of the Contract Documents and/or as recommended by the manufacturer. In addition:

1. Provide the following incidental parts for up to every four (4) of the same size, model, and type of HVAC fan furnished under this Section:

a. One (1) blower with wheel

b. One (1) set bearing and seal

c. One (1) set sheave

d. One (1) shaft

e. Two (2) sets of belts for each belt driven fan

2. Provide electric motor incidental parts in accordance with Section 26 05 91, Low Voltage Electric Motors.

B. Tools: Provide standard and special tools and supplies necessary to service, disassemble, repair, and adjust the equipment.

1.10 SPECIAL WARRANTY PROVISIONS / GUARANTEE PERIODS

A. All equipment provided under this Section shall be covered by a one (1) year manufacturer warranty, which shall commence upon Substantial Completion, and shall cover 100% of the parts and labor involved in repair or replacement

PART 2 - PRODUCTS

2.01 MANUFACTURERS

A. In-Line Square Centrifugal Fans:

1. Greenheck
2. Loren Cook Company
3. Twin City Fan, Minneapolis
4. Or approved equal.

2.02 MATERIALS / EQUIPMENT

A. General:

1. Fans shall be as shown on the Contract Drawings.

a. The capacity of all HVAC fans shall be as shown on the Contract Drawings.

b. Where shown on the Contract Drawings, explosion proof motors and AMCA Type "A" spark resistant construction HVAC fans shall be provided.

2. Each fan shall bear a permanently affixed manufacturer’s nameplate containing the model number and individual serial number for future identification.

3. Motors:

a. Unless otherwise indicated, motors shall be of the totally enclosed premium efficiency fan cooled type.

b. Motors shall not be selected for operation in the service factor range/zone. The maximum brake horsepower required at any point on the performance curve shall not exceed the rated horsepower of the motor.

4. Electrical Service:

a. 115V, single phase, 60 Hz.

5. Disconnect Switches: All fans and damper operators shall each be provided with individual externally mounted disconnect switches.

6. Enclosures:

a. All enclosures shall be NEMA 4X, and of stainless steel construction, unless otherwise shown on the Contract Drawings.

b. NEMA 7 enclosures shall be provided where shown on the Contract Drawings. In explosion proof areas:

1) HVAC fans shall be of AMCA Type A spark resistant construction shall be provided.

2) Fans shall have all parts in contact with gas fabricated of non-ferrous materials; bearings shall not be located in the gas stream.

3) Explosion proof fans shall be provided with NEMA 7 explosion proof disconnect switches, explosion proof damper operators, and explosion proof motors.

7. Bearings:

a. All fan bearings shall be selected for a minimum L-50 life of 100,000 hrs at maximum operating speed.

8. Shafts:

a. All shafts shall be sized so the first critical speed is at least 20% over the maximum operating speed.

b. Close tolerance shall be maintained along the length of the shaft.

9. Drive Type:

a. The fans shall be either direct connected or V belt drive as indicated on the HVAC Fan Schedule shown on the Contract Drawings.

b. V-belt Drives:

1) V-belt Drives shall have the following rated capacities:

a) For motors ≤ 10 hp: 120% of rated capacity.

b) For motors > 10 hp, 150% of rated capacity.

2) All V belt drives shall be provided with adjustable sheaves.

3) Belt Guards:

a) Exposed V-belt drives shall have removable belt guards with openings to allow for tachometer readings at both drive and fan shafts.

b) Guards shall be so constructed as to allow visual inspection of the belts without removing the guard.

c) All belt guards shall be OSHA-approved.

d) Exterior, exposed belt guards shall be weatherproof.

10. Seismic Restraints:

a. All fans shall be secured or anchored to withstand seismic forces anticipated in seismic zone 2A.

b. Equipment shall be provided with seismic restraints in accordance with SMACNA Seismic Restraint Manual: Guidelines for Mechanical Systems, as published by, and in accordance with the latest edition of the City of New York Building Code and referenced Uniform Building Code requirements.

11. Vibration isolators:
    a. All vibration isolators shall be provided in conformance with the requirements of Section 40 05 96, Vibration Control.
    b. Isolators shall have a minimum efficiency of 90%.
    c. Installation, type, number, and size of vibration isolators shall be in conformance with the manufacturer's recommendations for the frequencies involved.

B. In-Line Square Centrifugal Fans:
1. General:
    a. In-line square fans shall be of centrifugal belt driven in-line type.
2. Construction:
    a. Housing:
        1) The fan housing shall be of the square design constructed of heavy gauge all aluminum and shall include square duct mounting collars.
    b. Wheel:
        1) The fan wheel shall be centrifugal backward inclined, constructed of aluminum, and shall include a wheel cone carefully matched to the inlet cone for precise running tolerances.
        2) Wheels shall be statically and dynamically balanced.
    c. Shaft:
        1) Precision ground and polished fan shafts shall be mounted in permanently sealed, lubricated pillow block ball bearings.
3. Drive:
    a. Motors and drives shall be mounted out of the airstream with combination motor cover and belt guards.
    b. Motors shall be readily accessible for maintenance.
    c. Pulleys shall be of the fully machined cast iron type, keyed and securely attached to the wheel and motor shafts.
    d. Motor pulleys shall be adjustable for system balancing.
4. Accessories:
    a. Fan construction shall include two removable access panels located perpendicular to the motor mounting panel.
        1) The access panels must be of sufficient size to permit easy access to all interior components.

2.03 FABRICATION / ASSEMBLING / FINISHES

A. Anchorage Devices:
1. Provide anchorage devices in accordance with Section 05 05 23, Metal Fastenings.
2. Contractor shall furnish anchor bolts and nuts of Type 316 stainless steel, of ample size and strength for the purpose intended, sized by the equipment manufacturer.

3. All hardware for mounting of motor drives and control panels shall be Type 316 stainless steel.

B. Identification:

1. Provide in accordance with Section 40 05 97, Identification for Process Equipment.
2. Each unit of equipment shall be identified with the equipment item numbers shown on the Contract Drawings.
3. A corrosion resistant tag and nameplate, securely affixed in a conspicuous place on each unit shall give the equipment item number, manufacturer's name or trademark and such other information as the manufacturer may consider necessary, or as specified, to complete identification.

C. Dampers:

1. All dampers for roof mounted fans shall be mounted in the mounting pedestal with removable access panel for inspection and servicing of damper and operator.
2. Mounting pedestal shall provide solid ventilator support and a weather tight seal.

D. Balancing:

1. All fans shall be statically and dynamically balanced at the speed at which the unit is scheduled to operate. Fans with corrosion resistant coatings shall be balanced after being coated.

E. Coatings:

1. If no other coating is otherwise specified for a type of fan on the HVAC Fan Schedule shown on the Contract Drawings, fans shall be provided (inside and outside) with baked on phenolic corrosion resistant coating including all accessories but not limited to the housing, wheels, curbs, liners, dampers, damper access sections. Coating shall be applied in the shop using the manufacturer's approved system.
2. Coat machined, polished, and non ferrous metal surfaces and similar un-painted surfaces with corrosion prevention compound which shall be maintained during storage and until equipment begins operation

2.04 SOURCE QUALITY CONTROL / SHOP TESTS

A. All HVAC Fans shall be as efficient as those HVAC Fans that have been tested to perform satisfactorily for at least two (2) years.

B. Shop Tests:

1. All shop tests shall be witnessed by a licensed Professional Engineer.
2. The licensed Professional Engineer shall sign and seal all shop test reports.
   a. The state of the Professional Engineer's registration, the Professional Engineer's license number, and the Professional Engineer's name on the seal shall be clearly legible.

PART 3 - EXECUTION

3.01 EXAMINATION / PREPARATION

A. Inspection:

1. The inspection shall include welding, dimensions, bearings and overall workmanship.
2. The Contractor shall not install damaged items until repairs are made in accordance with manufacturer's written instructions and approval by Engineer.
   a. Only minor repair work will be permitted in the field.
   b. All damaged items requiring remedial work shall be returned to the manufacturer for repair or replacement.

3.02 INSTALLATION

A. Install HVAC fans in complete accordance with the manufacturer's printed installation instructions and the approved shop drawings. In addition:

1. Units shall be electrically grounded in the field by installing contractor.

3.03 FIELD TESTING / QUALITY CONTROL

A. Furnish the services of a qualified manufacturer's representative to check and approve all installations before operation as well as conduct field testing, in accordance with the requirements of the Contract documents. In addition:

1. The Contractor shall verify that all work furnished and installed conforms to the requirements the Contract Documents.
2. Reports: Submit a report from the manufacturer of each visit to the site. Reports shall provide complete information on time, schedule, tasks performed, persons contacted, problems corrected, test results, training, instruction and all other pertinent information.
3. Perform field tests in accordance with Section 23 05 93, Testing, Adjusting, and Balancing for HVAC.

3.04 STARTUP / DEMONSTRATION

A. Furnish the service of a qualified manufacturer representative to assist and train the plant operations and maintenance staff in the care, operation, and maintenance of the HVAC fans in accordance with the requirements of the Contract Documents. In addition:

1. The Contractor shall make all adjustments required to place Work in proper operating condition.
2. The Contractor shall include instruction on care and maintenance of the HVAC fans in the training of plant personnel.
3. In the event of trouble with the equipment, the manufacturer's representative shall revisit the site as often as required until all troubles are corrected and the installation is entirely satisfactory.

3.05 ADJUSTING / PROTECTION / CLEANUP

A. Adjusting:

1. Upon completion of the installation, the Contractor shall adjust all HVAC fans for their intended use.

a. Assembled fans shall then be dynamically balanced using a vibration analyzer to measure velocity.

b. The final reading shall not exceed 0.1-in./sec at the fan shaft speed.

c. The exact level of vibration will be recorded on the fan as proof of the final dynamic balance.

B. Protection:

1. The HVAC fans shall be protected as per the requirements of the Contract Documents. The use of HVAC fans shall not be permitted until permission is given by the Engineer.

   a. When permission is given, the Contractor shall operate each HVAC fan to ensure their performance.

C. Cleaning:

1. the Contractor shall thoroughly clean all surfaces of the installed HVAC fans and remove all debris and waste materials resulting from installation.

END OF SECTION

No Text On This Page

SECTION 23 82 39 – UNIT HEATERS – IG/PC

PART 1 - GENERAL

1.01 SUMMARY

A. The Contractor shall provide all labor, materials, equipment, incidentals, and appurtenances as shown, specified, and required to furnish, install and test all unit heaters, complete and operational.

B. All unit heaters shall be provided in accordance with the schedule shown on the Contract Drawings.

1.02 PAYMENT

A. There is no separate payment provision for this Section.

1.03 RELATED SECTIONS

A. Section 23 05 93 – Testing, Adjusting, and Balancing for HVAC

1.04 REFERENCES

A. Not Used

1.05 DESCRIPTION

A. This Section includes requirements for providing unit heaters and accessories in accordance with applicable standards and regulations. In addition:

1. Unit heaters shall be furnished complete with all accessories, special tools, incidental parts, attachments, mountings, anchor bolts, and other appurtenances as specified and/or as may be required for a proper installation.

1.06 QUALITY ASSURANCE

A. Requirements of Regulatory Agencies: Comply with applicable provisions of the standards organizations and regulatory agencies, below.

1. American Society of Mechanical Engineers.
2. American Society of Testing Materials.
3. Air Movement and Control Association.
4. Air Conditioning and Refrigeration Institute.
5. National Electrical Code.
6. Standards of the Hydraulic Institute
7. American National Standard Institute.
8. National Fire Protection Association.

B. Qualifications of Manufacturer:

1. All components of the unit heaters shall be provided by the Contractor through a single vendor.

a. The Contractor (through the unit heater vendor) shall have the sole responsibility of matching all components and providing equipment which functions together as a system.

2. The finned-tube radiation heaters shall be standard equipment of the manufacturer.
3. The finned-tube radiation heaters shall be designed, constructed, and installed in accordance with the best practices of the trade, and shall operate satisfactorily when installed as shown on the Contract Drawings.
4. Provide units listed by the Underwriters Laboratories, Inc.

C. Qualifications of the Installer:

1. The Installer must be a New York City licensed plumber.

1.07 SUBMITTALS

A. Submittals shall comply with the requirements of the Contract Documents. In addition, submittals shall include, but not be limited, to:

1. Action Submittals:
   a. Equipment specifications and data sheets identifying all materials used and methods of fabrication.
   b. Complete assembly, layout, and installation drawings with clearly marked dimensions.
   c. Fan performance data.
   d. Coil performance data.
   e. Details of corrosion resistance coating.
   f. Weights of assembled units.
   g. Motor nameplate data.
   h. Example equipment nameplate data sheet.
   i. Schematic diagrams for electric and control systems showing wiring for individual equipment items and interconnecting wiring diagrams.
   j. Shop and field testing procedures.
   k. List of recommended lubricants.
   l. Operation and Maintenance Manuals.
2. Information Submittals:
   a. Incidental Parts List.
   b. Special Tools List
   c. Reports of Certified Shop Tests.
   d. List of Lubricants:
      1) The manufacturer shall submit a list with a minimum of four (4) manufacturer's standard lubricants which may be used interchangeably for each type of lubricant required.
         a) The Contractor shall utilize this list in preparing comprehensive lubrication survey as described in the Contract Documents.

1.08 DELIVERY, STORAGE, AND HANDLING

A. The Contractor shall deliver materials provided under this Section in accordance with the requirements of the Contract Documents. In addition:

1. The cleaning, preservation and packing of the unit heaters for shipment shall be in accordance with the manufacturer's commercial practice.

B. The Contractor shall store and handle materials provided under this Section in accordance with the requirements of the Contract Documents. In addition:

1. The unit heaters shall be handled in such a manner that they may be transported and unloaded without being over-stressed, deformed, or otherwise damaged.
2. The unit heaters shall be protected from corrosion and deterioration and shall be stored in a dry area.
   a. Materials stored outdoors shall be supported above ground surfaces on wood runners and protected with effective and durable waterproof covers approved by the Engineer.
3. Interiors shall be kept free from dirt and foreign matter.

1.09 INCIDENTAL PARTS, SPECIAL TOOLS, AND SUPPLIES

A. The Contractor shall provide incidental parts and special tools necessary to service, disassemble, repair and adjust the equipment provided under this Section, and as per the requirements of the Contract Documents and/or as recommended by the manufacturer. In addition:

1. Provide two sets of filters for each cabinet unit heater, properly packed and labeled.
2. Provide one motor for up to every 4 of same size motor for all heaters.

B. Tools: Provide standard and special tools and supplies necessary to service, disassemble, repair, and adjust the equipment.

1.10 SPECIAL WARRANTY PROVISIONS / GUARANTEE PERIODS

A. All products provided under this Section shall be covered by a one (1) year manufacturer warranty, which shall commence upon Substantial Completion, and shall cover 100% of the parts and labor involved in repair or replacement.

PART 2 - PRODUCTS

2.01 MANUFACTURERS

A. Unit Heaters:

1. Trane Company
2. Modine Manufacturing Co
3. Markel
4. Or approved equal.

2.02 MATERIALS / EQUIPMENT

A. Unit Heaters:

1. General:

   a. The unit heater shall be complete with:

      1) Electric Heating coil.

      2) Fan.

      3) Motor.

      4) Fan Guard.

      5) Louver Fin Diffuser (for horizontal unit heaters).

      6) Casing.

   b. Each unit shall be provided with mounting bracket.

2. Coating:

   a. The entire unit including coil shall be coated internally and externally with a corrosion resistant phenolic coating.

   b. The coating on the entire unit shall be baked on.

3. Coils:

   a. The coils shall be manufacturer installed Electric Heating coils

4. Casing: The casing shall be constructed of heavy gauge steel.

5. Fan Wheels:

   a. Fan wheels shall consist of heavy gauge aluminum propeller type blades, statically and dynamically balanced at the speed at which the unit is scheduled to operate.

6. Drive:

   a. The fan shall be direct driven by a resiliently mounted, single speed, totally enclosed motor.

7. Motor:

   a. Explosion-proof motors shall be provided where shown on the schedule on the Contract Drawings.

B. Cabinet Heaters:

1. General:

   a. Provide cabinet heaters of the minimum size, heating and air capacities and arrangement shown.

2. Heating Element:

   a. Shall be electric heating coil as per manufacturer.

3. Cabinets:

   a. Construct cabinets of heavy gauge bonderized sheet steel, with a baked enamel finish of a standard color selected.

1) Construct front panels of die formed steel, with top inlet and bottom discharge grilles.

4. Blowers:
   a. Construct blowers of aluminum, of the forward curved, centrifugal, double width, double inlet type, balanced to give quiet operation.
5. Motor and Drive:
   a. Provide the permanent split capacitor type motor, 3-speed, with automatic overload protection and resilient base.
   b. Provide the motor of the direct drive type with lubricated bearings, and with the speed selector switch mounted inside the cabinet.
6. Accessories:
   a. Provide units complete with 1-in. thick fiberglass disposable type air filters, arranged for easy removal and replacement.

2.03 FABRICATION / ASSEMBLING / FINISHES

A. Identification:
   1. Each unit of equipment shall be identified with the equipment item numbers shown on the Contract Drawings.
   2. A corrosion resistant tag and nameplate, securely affixed in a conspicuous place on each unit shall give the equipment item number, manufacturer's name or trademark and such other information as the manufacturer may consider necessary, or as specified, to complete identification.

B. Coatings:
   1. All exterior and interior metal surfaces of unit heaters (except coils) shall be factory primed and factory painted in accordance with Section 09 91 00, Painting.

2.04 SOURCE QUALITY CONTROL / SHOP TESTS

A. NOT USED

PART 3 - EXECUTION

3.01 EXAMINATION / PREPARATION

A. Inspection:
   1. The Contractor shall not install damaged items until repairs are made in accordance with manufacturer's written instructions and approval by Engineer.
      a. Only minor repair work will be permitted in the field.
      b. All damaged items requiring remedial work shall be returned to the manufacturer for repair or replacement.

3.02 INSTALLATION

A. Install unit heaters in complete accordance with the manufacturer's printed installation instructions and the approved shop drawings.

3.03 FIELD TESTING / QUALITY CONTROL

A. Furnish the services of a qualified manufacturer's representative to check and approve all installations before operation in accordance with the requirements of the Contract documents. In addition:

1. The Contractor shall verify that all work furnished and installed conforms to the requirements of the Contract Documents.

B. All tests shall be performed in accordance with Section 23 05 93, Testing, Adjusting and Balancing for HVAC.

3.04 STARTUP / DEMONSTRATION

A. Furnish the service of a qualified manufacturer representative to assist and train the plant operations and maintenance staff in the care, operation, and maintenance of the unit heaters in accordance with the requirements of the Contract Documents. In addition:

1. The Contractor shall make all adjustments required to place Work in proper operating condition.
2. The Contractor shall include instruction on care and maintenance of the convectors in the training of plant personnel.
3. In the event of trouble with the equipment, the manufacturer's representative shall revisit the site as often as required until all troubles are corrected and the installation is entirely satisfactory.

3.05 ADJUSTING / PROTECTION / CLEANUP

A. Adjusting:

1. Upon completion of the installation, the Contractor shall adjust all the unit heaters for their intended use.
2. Set air deflectors for proper air delivery.
3. Check room thermostat and wiring connections to unit heater.
4. Check return air thermostat and connections to cabinet unit heater.

B. Protection of Finished Work:

1. Unit heaters shall be protected as per the requirements of the Contract Documents. The use of unit heaters shall not be permitted until permission is given by the Engineer.
   a. When permission is given, the Contractor shall operate each convector to ensure their performance.

C. Cleaning:

1. The Contractor shall thoroughly clean all surfaces of the installed unit heaters and remove all debris and waste materials resulting from installation.
2. Clean work as specified in the Contract Documents.

END OF SECTION

SECTION 23 05 29 – HANGERS AND SUPPORTS FOR HVAC EQUIPMENT – IG/PC

PART 1 - GENERAL

1.1 SUMMARY

A. Section Includes:

1. Hangers for ducts
2. Fastener systems.
3. Equipment supports

1.2 SUBMITTALS

A. Product Data: For each type of product.

B. Shop Drawings: Signed and sealed by a qualified professional engineer licensed in the State of New York, for Approval by the Engineer. Show fabrication and installation details and include calculations for the following; include Product Data for components:

1. Metal framing systems.
2. Fiberglass strut systems.
3. Equipment supports.

PART 2 - PRODUCTS

2.1 PERFORMANCE REQUIREMENTS

A. Structural Performance: Hangers and supports for ductwork and equipment shall withstand the effects of gravity loads and stresses within limits and under conditions indicated according to ASCE/SEI 7

1. Design supports for metal ductwork as per SMACNA Manual.
2. Design equipment supports capable of supporting combined operating weight of supported equipment and connected systems and components.
3. Design seismic-restraint hangers and supports for ductwork and equipment

2.2 METAL DUCT HANGERS AND SUPPORTS

A. All hangers for ducts should be as specified in the SMACNA Manual.

2.3 FASTENER SYSTEMS

A. Powder-Actuated Fasteners: Threaded-steel stud, for use in hardened portland cement concrete with pull-out, tension, and shear capacities appropriate for supported loads and building materials where used.

B. Mechanical-Expansion Anchors: Insert-wedge-type anchors for use in hardened portland cement concrete; with pull-out, tension, and shear capacities appropriate for supported loads and building materials where used.

1. Indoor Applications: stainless steel.
2. Outdoor Applications: Stainless steel.

2.4 EQUIPMENT SUPPORTS

A. Description: Welded, shop- or field-fabricated equipment support made from structural carbon-steel shapes.

B. Manufacture: Subject to compliance with requirements, provide products by one of the following:

1. Eaton: B-Line Series, Hangers and Supports
2. Gulf State Hager's and Supports
3. Empire Industries
4. Or approved equal

C. Carbon Steel: ASTM A 1011

D. Structural Steel: ASTM A 36, carbon-steel plates, shapes, and bars; galvanized.

E. Stainless Steel: ASTM A 240

F. Threaded Rods: Continuously threaded. Zinc-plated or galvanized steel for indoor applications and stainless steel for outdoor applications. Mating nuts and washers of similar materials as rods.

G. Grout: ASTM C 1107, factory-mixed and -packaged, dry, hydraulic-cement, nonshrink and nonmetallic grout; suitable for interior and exterior applications.

1. Properties: Nonstaining, noncorrosive, and nongaseous.
2. Design Mix: 5000-psi, 28-day compressive strength.

PART 3 - EXECUTION

3.1 HANGER AND SUPPORT INSTALLATION

A. Install hangers for ducts as specified in the SMACNA Manual.

B. Fastener System Installation:

1. Install powder-actuated fasteners for use in lightweight concrete or concrete slabs less than 4 inches (100 mm) thick in concrete after concrete is placed and completely cured. Use operators that are licensed by powder-actuated tool manufacturer. Install fasteners according to powder-actuated tool manufacturer's operating manual.
2. Install mechanical-expansion anchors in concrete after concrete is placed and completely cured. Install fasteners according to manufacturer's written instructions.

C. Install hangers and supports complete with necessary attachments, inserts, bolts, rods, nuts, washers, and other accessories.

D. Equipment Support Installation: Fabricate from welded-structural-steel shapes.

E. Install building attachments within concrete slabs or attach to structural steel. Install additional attachments at concentrated loads, including valves, flanges, and strainers, NPS 2-1/2 and larger and at changes in direction of duct. Install concrete inserts before concrete is placed; fasten inserts to forms and install reinforcing bars through openings at top of inserts.

F. Load Distribution: Install hangers and supports so that ductwork live and dead loads and stresses from movement will not be transmitted to connected equipment.

3.2 EQUIPMENT SUPPORTS

A. Fabricate structural-steel stands to suspend equipment from structure overhead or to support equipment above floor.

B. Grouting: Place grout under supports for equipment and make bearing surface smooth.

C. Provide lateral bracing, to prevent swaying, for equipment supports.

3.3 METAL FABRICATIONS

A. Cut, drill, and fit miscellaneous metal fabrications for hangers and equipment supports.

B. Fit exposed connections together to form hairline joints. Field weld connections that cannot be shop welded because of shipping size limitations.

C. Field Welding: Comply with AWS D1.1 procedures for shielded, metal arc welding; appearance and quality of welds; and methods used in correcting welding work; and with the following:

1. Use materials and methods that minimize distortion and develop strength and corrosion resistance of base metals.

2. Obtain fusion without undercut or overlap.

3. Remove welding flux immediately.

4. Finish welds at exposed connections so no roughness shows after finishing and so contours of welded surfaces match adjacent contours.

3.4 ADJUSTING

A. Trim excess length of continuous-thread hanger and support rods to 1-1/2 inches.

3.5 PAINTING

A. Touchup: Clean field welds and abraded areas of shop paint. Paint exposed areas immediately after erecting hangers and supports. Use same materials as used for shop painting. Comply with SSPC-PA 1 requirements for touching up field-painted surfaces.

1. Apply paint by brush or spray to provide a minimum dry film thickness of 2.0 mils.

B. Galvanized Surfaces: Clean welds, bolted connections, and abraded areas and apply galvanizing-repair paint to comply with ASTM A 780/A 780M.

END OF SECTION

No Text On This Page

SECTION 23 05 53 – IDENTIFICATION FOR DUCTWORK AND EQUIPMENT – IG/PC

PART 1 - GENERAL

1.1 SUMMARY

A. Section includes

1. Equipment labels
2. Fire or smoke or fir/smoke damper access door labels
3. Warning signs and labels.
4. Duct labels.
5. Warning tags.

1.2 SUBMITTALS

A. Product Data: For each type of product indicated.

B. Samples: For color, letter style, and graphic representation required for each identification material and device.

C. Equipment Label Schedule: Include a listing of all equipment to be labeled with the proposed content for each label.

1.3 COORDINATION

A. Coordinate installation of identifying devices with completion of covering and painting of surfaces where devices are to be applied.

B. Coordinate installation of identifying devices with locations of access panels and doors.

C. Install identifying devices before installing acoustical ceilings and similar concealment.

PART 2 - PRODUCTS

2.1 EQUIPMENT LABELS

A. Metal Labels for Equipment:

1. Material and Thickness: Brass, 0.032-inch minimum thickness or anodized aluminum, 0.032-inch minimum thickness, and having predrilled or stamped holes for attachment hardware.
2. Minimum Label Size: Length and width vary for required label content, but not less than 2-1/2 by 3/4 inch.
3. Minimum Letter Size: 1/4 inch for name of units if viewing distance is less than 24 inches, 1/2 inch for viewing distances up to 72 inches, and proportionately larger lettering for greater viewing distances. Include secondary lettering two-thirds to three-fourths the size of principal lettering.
4. Fasteners: Stainless-steel rivets.
5. Adhesive: Contact-type permanent adhesive, compatible with label and with substrate.

B. Label Content: Include equipment's Drawing designation or unique equipment number, Drawing numbers where equipment is indicated (plans, details, and schedules), plus the Specification Section number and title where equipment is specified.

C. Equipment Label Schedule: For each item of equipment to be labeled, on 8-1/2-by-11-inch bond paper. Tabulate equipment identification number and identify Drawing numbers where equipment is indicated (plans, details, and schedules), plus the Specification Section number and title where equipment is specified. Equipment schedule shall be included in operation and maintenance data.

2.2 FIRE/ SMOKE DAMPER ACCESS DOOR LABEL

A. Label Content: Fire or Smoke or Fire/Smoke damper access points shall be permanently identified on the exterior by label having letters not less than 0.5 inch in height reading: FIRE DAMPER, SMOKE DAMPER OR FIRE/SMOKE DAMPER.

2.3 WARNING SIGNS AND LABELS

A. Material and Thickness: Multilayer, multicolor, plastic labels for mechanical engraving, 1/8 inch thick, and having predrilled holes for attachment hardware.

B. Letter Color: Red.

C. Background Color: Yellow.

D. Maximum Temperature: Able to withstand temperatures up to 160 deg F (71 deg C).

E. Minimum Label Size: Length and width vary for required label content, but not less than 2-1/2 by 3/4 inch (64 by 19 mm).

F. Minimum Letter Size: 1/4 inch for name of units if viewing distance is less than 24 inches, 1/2 inch for viewing distances up to 72 inches, and proportionately larger lettering for greater viewing distances. Include secondary lettering two-thirds to three-fourths the size of principal lettering.

G. Fasteners: Stainless-steel rivets.

H. Adhesive: Contact-type permanent adhesive, compatible with label and with substrate.

I. Label Content: Include caution and warning information, plus emergency notification instructions.

2.4 DUCT LABELS

A. Material and Thickness: Multilayer, multicolor, plastic labels for mechanical engraving, 1/8 inch thick, and having predrilled holes for attachment hardware.

B. Letter Color: Black.

C. Background Color: White.

D. Maximum Temperature: Able to withstand temperatures up to 160 deg F (71 deg C).

E. Minimum Label Size: Length and width vary for required label content, but not less than 2-1/2 by 3/4 inch.

F. Minimum Letter Size: 1/4 inch for name of units if viewing distance is less than 24 inches, 1/2 inch for viewing distances up to 72 inches, and proportionately larger lettering for greater viewing distances. Include secondary lettering two-thirds to three-fourths the size of principal lettering.

G. Fasteners: Stainless-steel rivets.

H. Adhesive: Contact-type permanent adhesive, compatible with label and with substrate.

I. Duct Label Contents: Include identification of duct service using same designations or abbreviations as used on Drawings, duct size, and an arrow indicating flow direction.

1. Flow-Direction Arrows: Integral with duct system service lettering to accommodate both directions or as separate unit on each duct label to indicate flow direction.

2. Lettering Size: At least 1-1/2 inches high.

2.5 WARNING TAGS

A. Warning Tags: Preprinted or partially preprinted, accident-prevention tags, of plasticized card stock with matte finish suitable for writing.

1. Size: Approximately 4 by 7 inches.

2. Fasteners: Brass grommet and wire.

3. Nomenclature: Large-size primary caption such as "DANGER," "CAUTION," or "DO NOT OPERATE."

4. Color: Yellow background with black lettering.

PART 3 - EXECUTION

3.1 PREPARATION

A. Clean piping and equipment surfaces of substances that could impair bond of identification devices, including dirt, oil, grease, release agents, and incompatible primers, paints, and encapsulants.

3.2 EQUIPMENT LABEL INSTALLATION

A. Install or permanently fasten labels on each major item of mechanical equipment.

B. Locate equipment labels where accessible and visible.

3.3 DUCT LABEL INSTALLATION

A. Install plastic-laminated duct labels with permanent adhesive on air ducts in the following color codes:

1. Blue: For exhaust-air ducts.

2. ASME A13.1 Colors and Designs: For hazardous material exhaust.

B. Stenciled Duct Label Option: Stenciled labels, showing service and flow direction may be provided instead of plastic-laminated duct labels, at Installer's option, if lettering larger than 1 inch high is needed for proper identification because of distance from normal location of required identification.

C. Locate labels near points where ducts enter into concealed spaces and at maximum intervals of 50 feet in each space where ducts are exposed or concealed by removable ceiling system.

3.4 WARNING-TAG INSTALLATION

A. Write required message on, and attach warning tags to, equipment and other items where required.

END OF SECTION

No Text On This Page

SECTION 26 05 00 – BASIC ELECTRICAL REQUIREMENTS APPURTENANT WORKS – IG/PC

PART 1 - GENERAL

1.01 SUMMARY

A. The Contractor shall furnish all labor, materials, tools, and equipment, and perform all work and services necessary for, or incidental, to the furnishing and installation of all electrical work as shown on the Drawings, and as specified in accordance with the provisions of the Contract Documents and completely coordinate with the work of other trades involved in the general construction. Although such work is not specifically shown or specified, all supplementary or miscellaneous items, appurtenances, and devices incidental to or necessary for a sound, secure, and complete installation shall be furnished and installed as part of this work. The Contractor shall obtain approved Shop Drawings showing wiring diagrams, connection diagrams, roughing-in and hook up details for all equipment and comply therewith. All electrical work shall be complete and left in operating condition in accordance with the intent of the Drawings and the Specifications for the electrical work.

B. The Drawings show the general location of feeders, transformers, outlets, conduits, and circuit arrangements. The Contractor shall carefully investigate the structural and finish conditions affecting all work and shall arrange such work accordingly; furnishing such fittings, junction boxes, and accessories as may be required to meet such conditions. The Contractor shall refer to the entire Drawing set to verify openings, special surfaces, and location of other equipment, or other special equipment prior to roughing-in for panels, switches, and other outlets. The Contractor shall verify all equipment dimensions to ensure that proposed equipment will fit properly in spaces indicated.

C. Where outlets are shown near identified equipment furnished by this or other Contractors, it is the intent of the Specifications and Drawings that the outlet be located at the equipment to be served. The Contractor shall coordinate the location of these outlets to be near the final location of the equipment served whether placed correctly or incorrectly on the Drawings.ac

1.02 PAYMENT

A. There is no separate payment provision for this Section.

1.03 RELATED SECTIONS

A. Not in use.

1.04 REFERENCES

A. Conformance

1. All work, equipment and materials furnished shall conform with the existing rules, requirements and specifications of the following:

   a. Insurance Rating Organization having jurisdiction

   b. The serving electrical utility company

   c. The currently adopted edition of the National Electrical Code (NEC)

   d. The National Electric Manufacturers Association (NEMA)

e. The Institute of Electrical and Electronic Engineers (IEEE)

f. The Insulated Cable Engineers Association (ICEA)

g. The American Society of Testing Materials (ASTM)

h. The American National Standards Institute (ANSI)

i. The requirements of the Occupational Safety Hazards Act (OSHA)

j. The National Electrical Contractors Association (NECA) Standard of Installation

k. National Fire Protection Association (NFPA)

l. International Electrical Testing Association (NETA)

m. All other applicable Federal, State and local laws and/or ordinances.

2. All material and equipment shall bear the inspection labels of Underwriters Laboratories, Inc., if the material and equipment is of the class inspected by said laboratories.

B. Nonconformance

1. Any paragraph of requirements in these Specifications, or Drawings, deviating from the rules, requirements and Specifications of the above organizations shall be invalid and their (the above organizations) requirements shall hold precedent thereto. The Contractor shall be held responsible for adherence to all rules, requirements and specifications as set forth above. Any additional work or material necessary for adherence will not be allowed as an extra, but shall be included in the Bid. Ignorance of any rule, requirement, or Specification shall not be allowed as an excuse for nonconformity. Acceptance by the City does not relieve the Contractor from the expense involved for the correction of any errors which may exist in the drawings submitted or in the satisfactory operation of any equipment.

C. Certification

1. Upon completion of the work, the Contractor shall obtain certificate(s) of inspection and approval from the National Board of Fire Underwriters or similar inspection organization having jurisdiction and shall deliver same to the City.

1.05 DESCRIPTION

A. The electrical scope of work for this project primarily includes, but is not limited to, the following:

1. Furnish and install low voltage motor control equipment including reduced voltage motor starters and variable frequency drives.

2. Furnish and install power panelboards, lighting panelboards, dry-type transformers, and other low voltage electrical power distribution equipment.

3. Furnish and install all aboveground raceway systems including conduit, fittings, boxes, supports, and other pertinent components.

4. Furnish and install all low and medium voltage wire and cable resulting in a complete and operable electrical system.

5. Other electrical work as specified herein and indicated on the Drawings.

B. All material and equipment must be the product of an established, reputable, and approved manufacturer; must be new and of first class construction; must be designed

and guaranteed to perform the service required; and must bear the label of approval of the Underwriters Laboratories, Inc., where such approval is available for the product of the listed manufacturer as approved by the City.

C. When a specified or indicated item has been superseded or is no longer available, the manufacturer's latest equivalent type or model of material or equipment as approved by the City shall be furnished and installed at no additional cost to the City.

D. Where the Contractor's selection of equipment of specified manufacturers or additionally approved manufacturers requires changes or additions to the system design, the Contractor shall be responsible in all respects for the modifications to all system designs, subject to approval of the City. The Contractor's bid shall include all costs for all work of the Contract for all trades made necessary by such changes, additions or modifications or resulting from any approved substitution.

E. Furnish and install all stands, racks, brackets, supports, and similar equipment required to properly serve the equipment which is furnished under this Contract, or equipment otherwise specified or indicated on the Drawings.

1.06 QUALITY ASSURANCE

A. The grounding system maximum resistance shall not exceed 5 ohms under normally dry conditions. All structures and metal equipment containing electrical apparatus shall be connected to ground.

B. All grounding associated with the service feeders shall be in accordance with the requirements of the Electric Utility.

1.07 SUBMITTALS

A. In accordance with submittal procedures set forth by the City and the submittal requirements of the individual specification sections, the Contractor shall obtain from the equipment manufacturer and submit the following:

1. Shop Drawings
2. Operation and Maintenance Manuals
3. Incidental Parts List
4. Proposed Testing Methods and Reports of Certified Shop Tests
5. Reports of Certified Field Tests
6. Manufacturer’s Representative’s Certification

B. Submittals shall be sufficiently complete in detail to enable the City to determine compliance with Contract requirements.

C. Submittals will be approved only to the extent of the information shown. Approval of an item of equipment shall not be construed to mean approval for components of that item for which the Contractor has provided no information.

1.08 DELIVERY, STORAGE, AND HANDLING

A. The grounding equipment shall be delivered, stored and handled in accordance with Section 01 65 00 – Product Delivery Requirements, this Section, other applicable Specifications and the manufacturer’s recommendations.

1.09 INCIDENTAL PARTS, SPECIAL TOOLS, AND SUPPLIES

A. Not Used

1.10 SPECIAL WARRANTY PROVISIONS / GUARANTEE PERIODS

A. Unless otherwise specified in an individual specification section, all equipment and electrical construction materials furnished and installed under Division 31 shall be provided with a warranty in accordance with the requirements of Section 46 00 00 □ Equipment General Provisions.

PART 2 - PRODUCTS

2.01 MANUFACTURERS

A. Unless otherwise indicated, the materials to be provided under this Specification shall be the products of manufacturers regularly engaged in the production of all such items and shall be the manufacturer's latest design. The products shall conform to the applicable standards of UL and NEMA, unless specified otherwise. International Electrotechnical Commission (IEC) standards are not recognized. Equipment designed, manufactured, and labeled in compliance with IEC standards is not acceptable.

B. All items of the same type or ratings shall be identical. This shall be further understood to include products with the accessories indicated.

C. All equipment and materials shall be new, unless indicated or specified otherwise.

D. The Contractor shall submit proof if requested by the City that the materials, appliances, equipment, or devices that are provided under this Contract meet the requirements of Underwriters Laboratories, Inc., in regard to fire and casualty hazards. The label of or listing by the Underwriters Laboratories, Inc., will be accepted as conforming to this requirement.

E. Substitutions

1. Unless specifically noted otherwise, any reference in the Specifications or on the Drawings to any article, service, product, material, fixture, or item of equipment by name, make, or catalog number shall be interpreted as establishing the type, function, and standard of quality and shall not be construed as limiting competition.

2.02 MATERIALS / EQUIPMENT

A. Materials arriving on the job site shall be in accordance with Section 01 65 00 – Product Delivery Requirements.

B. Concrete

1. The Contractor shall furnish all concrete required for the installation of all electrical work, Concrete shall be Class A unless otherwise specified. Concrete and reinforcing steel shall meet the appropriate requirements of the NYC DEP BWSO Standard Sewer and Water Main Specifications and other applicable Sections.

2. The Contractor shall provide concrete equipment pads for all free-standing electrical apparatus and equipment located on new or existing floors or slabs. The Contractor shall provide all necessary anchor bolts, channel iron sills, and other materials as required. The exact location and dimensions shall be coordinated for each piece of equipment well in advance of the scheduled placing of these pads. Equipment pads shall be 4 inches high unless otherwise indicated on the Drawings and shall conform

to standard detail for equipment pads shown on the Contract Drawings. Equipment pads shall not have more than 3” excess concrete beyond the edges of the equipment.

3. The Contractor shall provide concrete foundations for all free-standing electrical apparatus and equipment located outdoors or where floors or slabs do not exist and/or are not or provided by others under this Contract. The Contractor shall provide all necessary anchor bolts, channel iron sills, and other materials as required. The location and dimensions shall be coordinated for each piece of equipment well in advance of the scheduled placing of the foundations. Equipment foundations shall be constructed as detailed on the Drawings or if not detailed on the Drawings shall be 6 inches thick minimum reinforced with #4 bars at 12-inch centers each way placed mid-depth. Concrete shall extend 6 inches minimum beyond the extreme of the equipment base and be placed on a compacted stone bed (#57 stone or ABC) 6 inches thick minimum

C. Rubber Insulation Matting

1. Rubber insulating matting shall be furnished and installed on the floor and in front of each piece of electrical equipment that is located indoors and installed under this Contract. Rubber insulating matting shall not be installed outdoors. The mat shall be long enough to cover the full length of the equipment. The mat shall be ¼-inch thick with beveled edges, canvas back, solid type with corrugations running the entire length of the mat. The matting shall meet OSHA requirements and the requirements of ASTM D-178 for Type 2, Class 2 insulating matting. Matting shall be 36 inches wide, minimum. However, matting width shall be no less than the NEC working clearance for the equipment with which it is associated.

2. Matting shall be provided for the following equipment:

   a. PLC/RTU Enclosures

   b. Motor Control Centers

   c. Switchgear Assemblies

   d. Switchboard Assemblies

   e. Variable Frequency Drives

   f. Reduced Voltage Starters

   g. Unit Substations

   h. Panelboards

   i. Automatic Transfer Switches

   j. Generator Output Circuit Breakers

   k. Generator Control Panels

   l. Fire Alarm Control Panels

2.03 FABRICATION / ASSEMBLING / FINISHES

A. Not Used

2.04 SOURCE QUALITY CONTROL / SHOP TESTS

A. Not Used

PART 3 - EXECUTION

3.01 EXAMINATION / PREPARATION

A. The Contractor shall examine the site and become familiar with conditions affecting the work as directed by the City.

B. The Contractor is responsible for coordinating all electric utility equipment installations with the serving electric utility. The Contractor shall furnish and install all electric utility equipment required by the electric utility to be installed by the Contractor whether specifically shown on the Drawings or not.

C. The Contractor is responsible for ensuring all electric utility equipment and construction installed by the Contractor is furnished and installed in accordance with the electric utility's design specifications and requirements. The Contractor is fully responsible for coordinating the scope of work with the electric utility. Any additional required electric utility construction or equipment not specified herein or shown on the Drawings shall be supplied by the Contractor at no additional cost to the Owner.

3.02 INSTALLATION

A. Cutting and Patching

1. Coordination

a. The Work shall be coordinated between all trades to avoid delays and unnecessary cutting, channeling and drilling. Sleeves shall be placed in concrete for passage of conduit wherever possible.

2. Damage

a. The Contractor shall perform all chasing, channeling, drilling and patching necessary to the proper execution of the Contract. Any damage to the building, structure, or any equipment shall be repaired by qualified mechanics of the trades involved at the Contractor's expense. If, in the City's judgment, the repair of damaged equipment would not be satisfactory, then the Contractor shall replace damaged equipment at own expense.

3. Existing Equipment

a. Provide a suitable cover or plug for openings created in existing equipment as the result of work under this Contract. For example, provide round plugs in equipment enclosures where the removal of a conduit creates a hole and the enclosure. Covers and plugs shall maintain the NEMA rating of the equipment enclosure. Covers and plugs shall be watertight when installed in equipment located outdoors.

B. Excavation and Backfilling

1. The Contractor shall perform all excavation and backfill required for the installation of all electrical work. All excavation and backfilling shall be in complete accordance with the applicable requirements of NYC DEP BWSO Standard Sewer and Watermain Specifications and other applicable Sections.

C. Corrosion Protection

1. Wherever dissimilar metals, except conduit and conduit fittings, come into contact, the Contractor shall isolate these metals as required with neoprene washers, nine (9) mil polyethylene tape, or gaskets.

D. Schedules and Facility Operations

1. Since the equipment testing required herein shall require that certain pieces of equipment be taken out of service, all testing procedures and schedules must be submitted to the City for review and approval one (1) month prior to any work beginning. When testing has been scheduled, the City must be notified 48 hours prior to any work to allow time for load switching and/or alternation of equipment. In addition, all testing that requires temporary shutdown of facility equipment must be coordinated with the Engineer so as not to affect proper facility operations.
2. At the end of the workday, all equipment shall be back in place and ready for immediate use should a facility emergency arise. In addition, should an emergency condition occur during testing, at the request of the Engineer, the equipment shall be placed back in service immediately and turned over to Engineer.
3. In the event of accidental shutdown of Owner equipment, the Contractor shall notify Engineer immediately to allow for an orderly restart of affected equipment.

3.03 FIELD TESTING / QUALITY CONTROL

A. Upon completion of the installation, the Contractor shall perform tests for operation, load (Phase) balance, overloads, and short circuits. Tests shall be made with and to the satisfaction of the City.

B. The Contractor shall perform all field tests and shall provide all labor, equipment, and incidentals required for testing and shall pay for electric power required for the tests. All defective material and workmanship disclosed shall be corrected by the Contractor at no cost to the City. The Contractor shall show by demonstration in service that all circuits and devices are in good operating condition. Test shall be such that each item of control equipment will function not less than five (5) times.

C. Refer to each individual specification section for detailed test requirements.

D. The Contractor shall complete the installation and field testing of the electrical installation at least two (2) weeks prior to the start up and testing of all other equipment. During the period between the completion of electrical installation and the start up and testing of all other equipment, the Contractor shall make all components of the Work available as it is completed for their use in performing Preliminary and Final Field Tests.

E. Before each test commences, the Contractor shall submit a detailed test procedure, and also provide test engineer resume, manpower and scheduling information for the approval by the City. In addition, the Contractor shall furnish detailed test procedures for any equipment required as part of the field tests of other systems

F. Infrared Inspection:

1. Just prior to the final acceptance of a piece of equipment, the Contractor shall perform an infrared inspection to locate and correct all heating problems associated with electrical equipment terminations.
2. The infrared inspection shall apply to all new equipment and existing equipment that is in any way modified under this Contract. All heating problems detected with new equipment furnished and installed under the Scope of this Contract shall be corrected by the Contractor. All problems detected with portions of existing equipment modified under this Contract shall also be corrected by the Contractor.
3. Any issues detected with portions of existing equipment that were not modified under this Contract are not the responsibility of the Contractor. Despite the Contractor not

being held responsible for these problems, the Contractor shall report them to the City immediately for resolution.

4. The infrared inspection report shall include both digital and IR pictures positioned side by side. Both the digital and IR pictures shall be clear and high quality. Fuzzy, grainy, or poorly illuminated pictures are not acceptable. The IR picture shall be provided with a temperature scale beside it, and an indication of the hot spot temperature in each picture. Reports shall be furnished in a 3-ring binder, with all pages printed in full color, with equipment assemblies separated by tabs.

3.04 STARTUP / DEMONSTRATION

A. Unless otherwise specified in an individual specification section, all training for equipment furnished and installed under Section 01 79 05 – Equipment Start-Up and Training.

3.05 ADJUSTING / PROTECTION / CLEANUP

A. Protective Device Setting and Testing

1. The Contractor shall provide the services of a field services organization to adjust, set, calibrate and test all protective devices in the electrical system. The organization shall be a subsidiary of or have a franchise service agreement with the electrical equipment manufacturer. The qualifications of the organization and resumes of the technicians as well as all data forms to be used for the field testing shall be submitted in accordance with section 26 05 20.

2. The Contractor shall provide the services of a qualified, independent, third party testing company using N.E.T.A. certified technicians to adjust, set, calibrate and test all protective devices in the electrical system. The company shall not be a subsidiary of the electrical equipment manufacturer. The qualifications of the testing company and resumes of the technicians as well as all data forms to be used for the field testing shall be submitted.

3. All protective devices in the electrical equipment shall be set, adjusted, calibrated and tested in accordance with the manufacturers' recommendations, the coordination study, and best industry practice.

4. Proper operation of all equipment associated with the device under test and its compartment shall be verified, as well as complete resistance, continuity and polarity tests of power, protective and metering circuits. Any minor adjustments, repairs and/or lubrication necessary to achieve proper operation shall be considered part of this Contract.

5. All solid state trip devices shall be checked and tested for setting and operation using manufacturers recommended test devices and procedures.

6. Circuit breakers and/or contactors associated with the above devices shall be tested for trip and close functions with their protective device.

7. When completed, the Contractor shall provide a comprehensive report for all equipment tested indicating condition, readings, faults and/or deficiencies in same. Inoperative or defective equipment shall be brought immediately to the attention of the City.

8. Prior to placing any equipment in service, correct operation of all protective devices associated with this equipment shall be demonstrated by field testing under simulated load conditions

B. Power System Studies

1. The City will provide the Power System studies to the firm providing the protective device setting and testing services. The Contractor shall notify the Engineer six (6) weeks in advance of the scheduled date for the protective device setting and testing. The testing firm shall submit to the Engineer a tabulated listing of all protective devices requiring setting six (6) weeks prior to the setting and testing date. This table shall include the protective device manufacturer, model number, ampere rating (if applicable), instrument transformer ratios, and all other required information.

END OF SECTION

No Text On This Page

SECTION 26 05 11 – GENERAL ELECTRICAL REQUIREMENTS – IG/PC

PART 1 - GENERAL

1.01 SUMMARY

A. The Contractor shall provide all labor, materials and equipment required to perform the Work in accordance with the general electrical requirements as specified under this Section and shown on the Contract Drawings.

1.02 PAYMENT

A. There is no separate payment provision for this Section.

1.03 RELATED SECTIONS

A. Section 09 91 00 - Painting.

1.04 REFERENCES

A. NFPA 70E - Standard for Electrical Safety in the Workplace

B. NFPA 101 - Life Safety Code

C. NYCEC - New York City Electrical Code

D. NYCCC - New York City Construction Code

E. OSHA 1910 Subpart S General Industry Standards Subpart S Electrical

1.05 DESCRIPTION

A. Not Used

1.06 QUALITY ASSURANCE

A. All equipment and devices, provided under this Contract, shall be properly connected and interconnected with other equipment and devices so as to render the installations complete for successful operation, regardless of whether all the connections and interconnections are specifically mentioned in the Sections or shown on the Contract Drawings.

B. Similar products shall be by the same manufacturer for uniformity on the Contract.

C. Electrical material and equipment shall be new and shall bear the label of UL, or other nationally recognized, independent testing laboratory, wherever standards have been established and label service regularly applies.

D. Where execution of the work under this Contract requires certain systems and equipment to be modified, the Contractor shall perform the work with due regard to maintenance of operations and construction staging in accordance with the Specifications.

E. The modification work shall be coordinated in advance with the plant superintendent and existing conditions. Contractor shall field determine and make such investigations as required to determine the functionality of each circuit and identify circuit terminations as required for the modifications intended to ensure the proper interface of all components for a complete functional system.

F. The Contractor shall retain the services of a wiring coordinator, to prepare the point-to-point field wiring diagrams. The wiring coordinator shall have experience in the

development of the diagrams of the type specified and shall have served in a similar role on a project of similar size and complexity.

G. Area Classifications

1. Materials and equipment for all indoor areas shall conform to the area classifications shown on the Contract Drawings or stated in the Specifications.
2. Materials and equipment for all outdoor areas shall conform to corrosive requirements, unless shown otherwise on the Contract Drawings or stated in the Specifications.
3. The locations and requirements shall be in accordance with the following:
   a. Materials, equipment and incidentals installed in corrosive areas shall meet NYCEC and NEMA requirements for corrosive locations. Enclosures installed in corrosive locations shall meet NEMA 4X requirements.
   b. Materials, equipment and incidentals installed in hazardous locations shall meet NYCEC requirements for the Class and Division designated. Enclosures installed in hazardous locations shall be provided with stainless steel hardware and watertight gasketing.
   c. Materials, equipment and incidentals installed in dusty locations shall meet NYCEC and NEMA 12 requirements.

1.07 SUBMITTALS

A. Contractor shall submit Shop Drawings and material specifications for the approval of the Engineer. Submittals shall include, but not be limited, to:

1. Point-to-point field wiring diagrams.
2. Qualifications of proposed wiring coordinator who shall prepare the point-to-point field wiring diagrams.

B. Reports

1. Demonstration of equipment report shall be submitted.

1.08 DELIVERY, STORAGE, AND HANDLING

A. Not Used

1.09 INCIDENTAL PARTS, SPECIAL TOOLS, AND SUPPLIES

A. Not Used

1.10 SPECIAL WARRANTY PROVISIONS / GUARANTEE PERIODS

A. Not Used

PART 2 - PRODUCTS

2.01 MANUFACTURERS

A. Not Used

2.02 MATERIALS / EQUIPMENT

A. Point-To-Point Field Wiring Diagrams

1. The Contractor shall provide point-to-point field wiring diagrams for all equipment, including equipment provided by other Prime Contractors.
2. The diagrams shall be developed for performance of the work and to document terminations. The diagrams shall be prepared based upon approved shop drawings of related Contracts and inspections as necessary to complete the diagrams. The diagrams shall include:
    a. External wiring for each piece of equipment, panel, instrument and other devices to control stations, lighting panels and motor controllers. The diagrams shall include control, status, signal and power wiring. Power diagrams shall include connections to switchgear, panelboards, panels and field devices.
    b. Numbered terminal block identification for each wire termination.
    c. Identification of the assigned wire numbers and color coding for all interconnections.
    d. Identification of all wiring by the conduit tag in which the wire is installed.
    e. Terminal, junction, and pull boxes through which wiring is routed.
    f. Identification of equipment with functional name and number to which wiring is to be connected.

2.03 FABRICATION / ASSEMBLING / FINISHES

A. Shop Finishes

1. Electrical equipment shall be shop painted in accordance with the requirements of Section 09 91 00- Painting.
2. Exposed ferrous metal surfaces except aluminum, bronze, brass and stainless steel components shall be cleaned with a commercial blast and primed with one coat of rust inhibitive primer.
3. Manufactured assemblies such as switchgear, substations, panelboards and motor controllers shall be shop painted in accordance with the requirements of Section 09 91 00 - Painting.
4. Other equipment shall be painted with the manufacturer's best grade finish paint system compatible with the finish coatings specified in Section 09 91 00 - Painting.

2.04 SOURCE QUALITY CONTROL / SHOP TESTS

A. Not Used

PART 3 - EXECUTION

3.01 EXAMINATION / PREPARATION

A. Maintenance of Operations

1. Where execution of the work under this Contract requires certain equipment to be taken out of service, the Contractor shall perform the work with due regard to maintenance of operations and construction staging in accordance with the Specifications.
2. The Contractor shall schedule the work in advance with the Engineer so as not to affect proper plant operations. When the work is scheduled, the Engineer shall be

notified 48 hours prior to proceeding with the work to allow time for the plant superintendent to perform load switching and alternation of equipment.

3. To the maximum extent possible at the end of the workday, all equipment shall be back in place and ready for its normal service use should a plant emergency arise. In addition, should an emergency condition occur during execution of the work, at the request of the plant engineer, the equipment shall be placed back in service immediately and turned over to plant personnel.
4. In the event of accidental shutdown of plant equipment, the Contractor shall notify plant personnel immediately to allow for an orderly restart of affected equipment.

3.02 INSTALLATION

A. Not Used

3.03 FIELD TESTING / QUALITY CONTROL

A. Not Used

3.04 STARTUP / DEMONSTRATION

A. The Contractor shall demonstrate, in the presence of the Engineer that all electrical systems and electrically operated equipment operates as specified, designed and as required.

B. Not Used.

C. The demonstration of equipment shall include the following:

1. All power circuits shall be operated to verify proper connection to equipment. Mechanical key-interlocks for circuit breakers shall be operated to verify their proper operation. Power shall be removed and reapplied to automatic transfer switches to verify their operation.
2. Emergency power systems shall be activated to verify their automatic start-up, proper operation while running and proper de-energization and cool down upon availability of normal power.
3. All pushbuttons, indicating lights and similar devices shall be operated to verify proper connection and function. All devices, such as pressure and flow switches and similar devices shall be operated to verify that shut-downs and control sequences operate as required.
4. The Contractor shall operate the systems to verify wiring and adjust the controls, as required, to achieve proper operation. This shall include wiring, timing and switching functions.

D. The Contractor shall provide a demonstration of equipment report. The report shall include complete information on time, schedule, tasks performed, persons contacted, problems corrected, and all other pertinent information.

3.05 ADJUSTING / PROTECTION / CLEANUP

A. Restoration

1. The Contractor shall field paint after installation marred or scratched surfaces. All scratches, abrasions and other damage to equipment shall be touch-up painted in accordance with the requirements of General Specification 09900 - Painting.

END OF SECTION

SECTION 26 05 20 – LOW-VOLTAGE WIRES, CABLES AND ACCESSORIES – IG/PC

PART 1 - GENERAL

1.01 SUMMARY

A. Requirements for providing low-voltage electric wires, cables and accessories.

1. Low-voltage electric wires, cables, and accessories shall be provided in accordance with the requirements specified under this Section, the Specifications and the Contract Drawings.

B. Low-voltage electric wires and cables to be provided shall include all accessories.

1.02 PAYMENT

A. There is no separate payment provision for this Section.

1.03 RELATED SECTIONS

A. None

1.04 REFERENCES

A. Definitions

1. Low-voltage as used in this Section and the Specifications shall mean all equipment, conductors, insulation systems and accessories intended for operation within the 600 Volt Class.

2. Low-voltage wires and cables shall mean all insulated electric wires and cables intended for use for power, lighting, control, instrumentation, communication, security and alarm circuits.

3. Low-voltage wires and cable accessories shall mean all devices and items intended to provide mechanical protection, terminate, connect, splice, insulate, tag and manage low-voltage wires and cables.

4. Cable is an assembly of insulated wires combined with fillers and separators in an enclosing jacket of insulating material.

5. All references to the Electric Utility or Utility shall mean Consolidated Edison Company or the Local Electric Utility having jurisdiction.

B. Reference Standards

Low-voltage wires and cables shall comply with the latest applicable provisions and recommendations of the following:

1. ANSI/ICEA S-95-658/NEMA WC70 - Power Cables Rated 2000 V or Less for the Distribution of Electrical Energy.

2. ASTM B8 - Specification for Concentric-Lay-Stranded Copper Conductors, Hard, Medium-Hard, or Soft.

3. ASTM D69 - Standard Test Methods for Friction Tape

4. ASTM D2301 - Standard Specification for Vinyl Chloride Plastic Pressure-Sensitive Electrical Insulating Tape.

5. ASTM D3005 - Standard Specification for Low-Temperature Resistant Vinyl Chloride Plastic Pressure-Sensitive Electrical Insulating Tape.
6. ICEA S-58-679 - Standard for Control, Instrumentation and Thermocouple Extension Conductor Identification.
7. IEEE C2 - National Electrical Safety Code.
8. IEEE 1210 - Standard Tests for Determining Compatibility of Cable-Pulling Lubricants with Wire and Cable.
9. NEMA WC 26/EEMAC 201 - Binational Wire and Cable Packing Standard
10. NETA ATS - NETA Acceptance Testing Specifications.
11. NFPA 72 - National Fire Alarm Code
12. NYCEC - NYC Electrical Code
13. NYCCC - NYC Construction Code
14. UL Standard No. 44 - Thermoset-Insulated Wires and Cables.
15. UL Standard No. 83 - Thermoplastic-Insulated Wires and Cables.
16. UL Standard 486A-486B - Wire Connectors

C. Not Used

1.05 DESCRIPTION

A. Not Used

1.06 QUALITY ASSURANCE

A. General:

1. All low-voltage wires, cables and accessories shall be made by an approved manufacturer, and in their construction shall be employed the most improved commercial materials and processes of manufacture.
2. Only low-voltage wires, cables and accessories manufactured under high standards of production and meeting the approval of the City shall be used.
3. Friction tape shall be in accordance with ASTM. D69.
4. All low-voltage wire and cable splicing and terminations shall be done by experienced cable splicers who have worked with similar wire and cable for a period of at least 5 years, using materials and procedures recommended by the wire and cable manufacturer. All splicing and terminations of low-voltage wire and cable shall be in accordance with the instructions of the low-voltage wire and cable manufacturer.
5. The low-voltage wire and cable manufacturer shall use a shop test facility that has recently calibrated testing apparatus and qualified, experienced technicians, for all shop tests. Calibration of testing apparatus shall be within one year.
6. All test equipment and instrument calibration shall be in accordance with the latest edition of the accuracy standard of the U.S. National Institute of Standards and Technology and the NETA acceptance testing specification.
7. The mineral-insulated metal sheath cable installation shall be performed by experienced mineral-insulated metal sheath cable installers who shall have been

regularly engaged in the installation of mineral-insulated metal sheath cable for a minimum of the past three years.

8. The Contractor shall retain the services of the mineral-insulated metal sheath cable manufacturer's representative to certify the cable installation is in accordance with the manufacturer's requirements.
9. Field testing of low-voltage wires and cables shall be in accordance with the requirements specified under this Section.
10. The Contractor shall retain the services of an independent testing firm who shall perform acceptance testing on the low-voltage wire and cable installation.
    a. The testing firm shall have experience in the inspection and testing of wires and cables of the type specified and shall be a member company of NETA.
    b. Provide proof of membership or demonstrate that the standards and experience required for membership are possessed, all to the satisfaction of the City.
    c. The testing shall be performed in accordance with the requirements specified under this Section.

1.07 SUBMITTALS

A. Contractor shall submit Shop Drawings and material specifications for the approval of the City. Submittals shall include, but not be limited to:

1. A list of proposed manufacturers shall be submitted with the products they produce proposed for the contract.
2. Manufacturer's Literature, specifications and engineering data for low-voltage wires, cables and accessories including but not limited to:
    a. Manufacturer and type of wire or cable.
    b. Minimum insulation resistance in megaohms per 1,000 ft. at 20 degrees C.
    c. Material, number and size of strands composing each conductor.
    d. Conductor insulation thickness in inches with material and voltage rating.
    e. Jacket thickness in inches.
    f. Average outside diameter of bare conductor.
    g. Average outside diameter of finished wire or cable and jacket material.
    h. Weight per 1,000 ft. of finished wire or cable.
    i. Minimum bending radius, in inches.
    j. Minimum pulling temperatures at which cable may be pulled without damage.
    k. Maximum pulling tensions which may be applied to the cable without damage.
    l. Literature identifying the methods and materials which Contractor proposes to use to make splices and terminations. Submittal shall consist of manufacturer's literature evidencing compatibility of the conductor insulation and jacket of the wire or cable with the splicing or terminating materials and methods which Contractor proposes to use.
    m. Manufacturer recommended pulling lubricants.

n. Qualifications of splicing and termination personnel.

3. Description of shop and field testing methods, procedures and apparatus with calibration dates shall be submitted. Testing methods and procedures shall be submitted at least 45 days in advance prior to conformation of witness testing dates and actual testing.
4. Qualifications of proposed testing firm to perform acceptance testing shall be submitted. Submit firm experience records at least 45 days in advance to actual testing, five recent references with phone numbers shall be submitted.
5. Qualifications of proposed mineral-insulated metal sheath cable installer shall be submitted. Submit installer experience records with five recent completed installations with names and phone numbers.
6. Certification from the mineral-insulated metal sheath cable manufacturer's representative that the cable installation is in accordance with the manufacturer's requirements.

B. Reports:

1. Shop and field test reports shall be submitted.
2. Acceptance testing report shall be submitted.

1.08 DELIVERY, STORAGE, AND HANDLING

A. Low-voltage wires, and cables shall be delivered, stored and handled in accordance with the Specifications and the manufacturer's instructions.

B. Deliver low-voltage cables on factory reels conforming to NEMA WC26. Each end of each length of cable shall be hermetically sealed with the manufacturer’s end caps and securely attached to the reel. Reels with unsealed ends will be rejected.

C. Inspect wire and cable protective coverings for evidence of damage during shipment.

D. Accomplish unloading without contacting cable surface or protective coverings or dropping cable reels from the delivering vehicle to the ground.

E. Store wires and cables on reels on elevated hard surfaces in a clean dry locations away from construction equipment, falling objects, sources high heat and chemicals or petroleum products.

F. Seal cut cable ends using properly sized heat shrink cap to prevent moisture ingress and wicking into the cable interior.

1.09 INCIDENTAL PARTS, SPECIAL TOOLS, AND SUPPLIES

A. Not Used

1.10 SPECIAL WARRANTY PROVISIONS / GUARANTEE PERIODS

A. Not Used

PART 2 - PRODUCTS

2.01 MANUFACTURERS

A. Low-voltage single conductor wires for installation in conduit shall be as manufactured by:

1. Southwire, Carrollton, GA;

2. General Cable, Highland Heights, KY;
3. Okonite Company, New York, NY;
4. Or approved equal.

B. Low-voltage cable shall be as manufactured by:
1. Southwire, Carrollton, GA;
2. General Cable, Highland Heights, KY;
3. Belden;
4. Okonite Company, New York, NY;
5. Or approved equal.

C. Compression connectors ring tongue type shall be manufactured by:
1. Ideal Industries, Sycamore, IL;
2. Thomas and Betts, Memphis, TN;
3. Burndy, Manchester, NH;
4. Or approved equal.

D. The mineral-insulated metal sheath cable shall be as manufactured by:
1. Pentair Pyrotenax, Houston, TX;
2. AFC Cable Systems, New Bedford, MA;
3. Or approved equal.

E. Compression splices shall be manufactured by:
1. Ideal Industries, Sycamore, IL;
2. Thomas and Betts, Memphis, TN;
3. Burndy, Manchester, NH;
4. Or approved equal.

F. Waterproof compression splices shall be manufactured by
1. Ideal Industries, Sycamore, IL;
2. Thomas and Betts, Memphis, TN;
3. Burndy, Manchester, NH;
4. Or approved equal.

G. Spring connector splices shall be manufactured by:
1. Ideal Industries, Sycamore, IL;
2. Thomas and Betts, Memphis, TN;
3. Burndy, Manchester, NH;
4. Or approved equal.

H. Markers shall be as manufactured by:

1. Ideal Industries, Sycamore, IL;
2. Thomas and Betts, Memphis, TN;
3. Brady, Milwaukee, WI;
4. Or approved equal.

I. Pulling lubricant shall be as manufactured by:

1. American Polywater Corporation, Stillwater MN;
2. 3M – St. Paul, MN;
3. Ideal Industries, Sycamore, IL;
4. Or approved equal.

2.02 MATERIALS / EQUIPMENT

A. Low-voltage wire and cable

1. Low-voltage wire and cable shall be used for all power, lighting, control instrumentation, alarm and security system circuits. The size and quantity of low-voltage wires and cables shall be as indicated in the conduit and cable schedule. The conductor jacket shall be in accordance with color identification requirements specified under this Section.
2. Low-voltage single conductor wires for installation in conduit shall be in accordance with the following:
   a. Conductors shall be stranded, copper, single conductor wire conforming to ASTM B8, and B33 No. 12 AWG minimum size.
   b. Conductor insulation shall be flame-retardant, moisture and heat resistant thermoset rated 90 degrees C in dry locations and 75 degrees C in wet locations and listed by UL as type XHHW-2 or RHW.
   c. XHHW-2 shall be used for all indoor circuits and RHW for all underground and outdoor circuits.
3. Low-voltage cable for installation in conduit shall be in accordance with the following:
   a. Conductors shall be stranded, copper conforming to ASTM B8 and B33, No. 12 AWG minimum size.
   b. Conductor insulation shall be moisture and flame resistant cross-linked polyethylene rated 90 degrees C in wet and dry locations and listed by UL as type XHHW-2.
   c. Cable conductors shall be assembled together with flame and moisture resistant filters and tape to make round.
   d. Cable shall include an overall protective jacket of polyethylene compound, 45 mils minimum thickness.
4. Instrumentation cable shall in addition comply with the following:
   a. Conductors shall No 16 AWG minimum size
   b. All conductors shall be polyethylene insulated and twisted in pairs with aluminum-mylar shield overlap.

c. Cable jacket shall be low halogen

5. Communication cable shall in addition comply with the following:
   a. Conductors shall be No 24 AWG minimum size.
   b. Conductor twist and shielding shall be as shown on the Contract Drawings or as stated in the Detailed Specifications.
   c. Cable jacket shall be low halogen
6. Fire Alarm cable shall in addition comply with the following:
   a. Conductors shall 18 AWG minimum size
   b. Cables shall be UL listed for the intended service
   c. Cables intended for use in the installation shall be approved for the intended use by the New York City Building Department, Material and Equipment Acceptance Division.
7. Security system cable shall in addition comply with the following:
   a. Conductors shall be No 22, AWG minimum size.
   b. Conductor twist and shielding shall be as shown on the Contract Drawings or as stated in the Detailed Specifications.
   c. Coaxial cable shall be as shown on the Contract Drawings or as stated in the Detailed Specifications.
8. Mineral-insulated metal sheath cable shall be used for the fire pump circuits. The mineral-insulated metal sheath cable shall be in accordance with the following:
   a. The mineral-insulated metal sheath cable shall be NYCEC, type MI. The cable assembly shall be UL listed including support for a 2 hour fire rating.
   b. Conductors shall be solid copper conforming to ASTM B5.
   c. Cable insulation shall be magnesium oxide mineral rated 600 volts, 90 degrees C. The cable shall include a metal-sheath consisting of seamless soft drawn copper.
   d. The cable shall be provided with all fittings and hardware necessary for proper installation.

B. Low-voltage wire and cable accessories

1. Cable connectors shall be provided for terminating low-voltage wire and cable. Connectors shall be solder less type and properly sized to fit fastening device and wire size. Connectors shall be in accordance with the following:
   a. For wire sizes up to and including No. 6 AWG, compression type with UL 486A listing shall be used. All cable terminations for conductors No. 10 AWG and smaller shall be terminated using UL listed ring tongue type, nylon insulated connectors, at each terminal board.
   b. For wire sizes No. 4 AWG and above, either compression type or bolted type with tin-plated contact faces shall be used.
   c. For wire sizes No. 250 kcmil and larger, connectors with at least 2 cable clamping elements or compression indents and provision for at least 2 bolts for joining to apparatus terminal shall be used.

2. Splicing for low-voltage wire and cable shall be performed when terminals are not provided. Splicing shall be in accordance with the following:
    a. For wire sizes No. 8 AWG and larger, splices shall be made up with compression type copper splice fittings with UL 486A listing. Splices shall be taped and covered with materials recommended by the cable manufacturers, to provide insulation equal to that on the conductors.
    b. For wire sizes No. 10 AWG and smaller, splices shall be made up with pre-insulated, spring connectors. Connectors shall be flame retardant with UL listing. Spring connectors shall be Twister type.
    c. For wet locations, splices shall be waterproofed. Compression type splices shall be waterproofed by a sealant-filled, thick wall, heat shrinkable, thermosetting tubing or by pouring a thermosetting resin into a mold that surrounds the joined conductor. Waterproof compression splices shall be UL listed, heavy wall type. Spring connector splices shall be UL listed and waterproofed with a sealant-filler. Spring connectors shall be Twister DB type.
3. Compression connectors shall be ring tongue type.
4. Cable markers shall be provided for the identification of low-voltage wire and cable. Markers shall be in accordance with the following:
    a. Markers shall be vinyl type, moisture, heat and abrasion resistant with adhesive back. Cable identification shall be clearly marked.
5. Low-voltage wire and cable pulling lubricant shall be used to reduce wire and cable tension and side wall pressure and aid in minimizing damage during low-voltage wire and cable installation. Pulling lubricant shall be in accordance with the following:
    a. UL Listed, compatible with the wire insulation or cable jacket, the raceway involved and acceptable to the wire and cable manufacturer. When wire and cable manufacturer shall be provided.
    b. Pulling lubricant shall be water based, with a 0.17 average coefficient of friction and a temperature range of 20 to 120 degrees F.
    c. Pulling lubricant shall confirm to IEEE 1210
    d. Pulling lubricant shall not support combustion.
    e. Pulling lubricant shall not cause residue to cement insulation or jackets to the inside of conduit or ducts.

2.03 FABRICATION / ASSEMBLING / FINISHES

A. Not Used

2.04 SOURCE QUALITY CONTROL / SHOP TESTS

A. Certified Shop Tests:
    1. Shop testing shall be performed on the low-voltage wire and cable at the manufacturer's plant prior to shipment. Shop test shall be in accordance with the latest revisions of ICEA and UL and shall demonstrate that the wire and cable tested conforms to the requirements specified.
    2. The Contractor shall provide a shop test report. The report shall identify the tests performed and the results obtained.

3. All low-voltage wire and cable shall be shop tested in accordance with the requirements of the Detailed Specifications.

B. Witnessed Shop Tests:

1. The Contractor shall perform witnessed shop tests in accordance with the Detailed Specifications.
2. The City shall have access during working hours for inspection purposes to all parts of the works where material and cable are being manufactured, and all reasonable inspection and testing facilities shall be provided to them without increase in price. The City may request that dielectric strength tests and measurements be made to verify the cable data furnished by the Contractor. For this purpose the Contractor shall furnish without increase in price, a length of cable, not to exceed 3 feet for each size to be cut from one or more reels as directed by the City. Each sample shall be marked with a tag bearing full description of cable insulation and number of reel from which it is cut.

PART 3 - EXECUTION

3.01 EXAMINATION / PREPARATION

A. All low-voltage wires and cables shall be installed within the raceways as shown on the Contract Drawings. They shall be carefully handled so as to avoid twists or kinks in the conductors or damage to the insulation.

B. The Contractor shall ensure that the manufacturer's recommended cable bending radii and pulling are not exceeded and that the number of conductors permitted in a conduit are in accordance with the latest applicable section of the New York City Electrical Code.

C. No splices shall be permitted between terminals except at approved junction or terminal boxes. Boxes shall be provided as shown on the Contract Drawings or as required by Code for the pull lengths. No more than two terminations shall be made at each terminal point. Cable and wire runs shall be looped through pull boxes without cutting and splicing where possible. All splices below grade, in manholes, hand holes and wet locations shall be waterproofed.

D. No splicing of instrument wiring shall be permitted. Instrument wiring shall be extended by use of field termination boxes employing labeled terminal strips. Shield continuity shall be maintained. Ultimate shield termination (ground) shall be at one end only.

E. The mineral-insulated metal sheath cable manufacturer's representative shall review the cable installation to certify that the cables are installed in accordance with the manufacturer's requirements.

3.02 INSTALLATION

A. Wire and Cables

1. Cables shall be installed complete with proper terminations at both ends. For each motor circuit, Contractor shall ensure proper phasing, phase sequence and motor rotation.
2. Wire and cable contained within a single conduit shall be pulled simultaneously using insulating pulling compounds containing no mineral oil.

3. Pulling tension on wires and cables shall be continuously monitored using a calibrated Dynamometer type device, having a calibration label within six months of its use.
4. Cables shall be installed with maximum slack at all terminal points, boxes, handholes and manholes.
5. Low-voltage cables located within manholes, handholes and boxes shall be wrapped with fireproofing tape for their entire length on an individual cable basis.
   a. Tape shall be 30 mills thick of self-extinguishing material which will not support combustion.
   b. Tape shall not deteriorate when subjected to water, salt, sewage or fungus and shall be secured with glass cloth tape.
   c. Low-voltage cables shall be fireproofed in accordance with the cable manufacturer's recommendations and then covered with tape extending at least one inch into any duct.

B. Conductor Identification

1. Each conductor shall be labeled at each termination point and all splice locations. Carry individual conductor or circuit identification throughout, with circuit numbers or other identification stamped on terminal boards when provided or the cable so it is visible around the cable's circumference.
2. Each conductor shall be identified in junction boxes, cabinets, and terminal boxes. Where no termination is made, use a plastic-coated, self-adhesive, wire marker. Where termination is made, use a plastic, pre-printed sleeve wire marker. Paper, self-adhesive wire markers shall not be used.
3. In manholes and handholes, each power conductor shall be identified by a laminated plastic tag located so that it can be seen from center of manhole without moving adjoining wires. Bundle and mark control wires as listed in conduit and cable schedule.
4. Multi-conductor control cables shall be color coded in accordance with ICEA S-58-679, Method 1, Table E
5. The following identification scheme shall be used for all low-voltage power circuits:

Voltage	Colors				
	Neutral Conductor	Phase A Conductor	Phase B Conductor	Phase C Conductor	Ground Conductor
208/120V	White	Black	Red	Light Blue	Green
240/120V	White-Gray Strip	Black-Blue Strip	Red-blue strip	None	Green
480/277V	Gray	Brown	Orange	Yellow	Green

3.03 FIELD TESTING / QUALITY CONTROL

A. After installation, all low-voltage wire and cable shall be field tested. The field tests shall be performed by the Contractor who shall furnish all testing equipment. The field tests

shall be witnessed by the City and certified by the Contractor. The Contractor shall provide a report identifying the tests performed and the results obtained.

B. Each electrical circuit shall be tested after permanent wires and cables are in place to demonstrate that the circuit and equipment are connected properly and will perform satisfactorily, as required, as intended, and that they are free from improper grounds and short circuits. The tests shall consist of the following:

1. Low-voltage wire and cable mechanical connections shall be individually tested after installation and before they are put in service with a calibrated torque wrench. Values shall be in accordance with manufacturer's recommendations.
2. Low-voltage wires and cables shall be individually tested for continuity between the required termination points for each ungrounded and grounded conductor. Test wire and cable after installation and before first energization or before they are put in service with an approved continuity tester. Test results shall be as recommended by the wire and cable manufacturer or in accordance with NETA ATS, NEMA, ICEA Standards.
3. Low-voltage wires and cables shall be individually tested for insulation resistance between ungrounded and grounded conductors, and from each ungrounded and grounded conductor to ground. Test wire and cable after installation and before first energization or before they are put in service with an approved insulation resistance tester, for one minute at a voltage rating recommended by the cable manufacturer or in accordance with NETA ATS, NEMA, and ICEA Standards.
4. The insulation resistance for any given conductor shall not be less than the value recommended by the cable manufacturer or in accordance with NETA ATS, NEMA and ICEA Standards. Any cable not meeting the recommended value or which fails when tested under full load conditions shall be replaced with a new cable for the full length.
5. Shielded instrumentation cable shields shall be tested with an ohmmeter for continuity along the full length of the cable and for shield continuity to ground.
6. Connect Shielded instrumentation cables shall be connected to a calibrated 4-20 milliamp DC signal transmitter and receiver. Test at 4, 12, and 20 milliamp transmitter settings.

3.04 STARTUP / DEMONSTRATION

A. Not Used

3.05 ADJUSTING / PROTECTION / CLEANUP

A. Not Used

END OF SECTION

No Text On This Page

SECTION 26 05 27 – GROUNDING – ESCR IG/PC

PART 1 - GENERAL

1.01 SUMMARY

A. Requirements for providing grounding.

1. Grounding shall be provided in accordance with the requirements specified under this Section, the Specifications and the Contract Drawings.

2. The grounding work shall be a complete system for the electrical and instrumentation systems, structures and equipment. The work shall include grounding of all electrical equipment, transformer neutrals, equipment enclosures, grounding electrodes, fences, and gates.

1.02 PAYMENT

A. There is no separate payment provision for this Section.

1.03 RELATED SECTIONS

A. Section 26 05 20 – Low -Voltage Wires, Cables and Accessories.

B. Section 26 05 33 – Raceways and Boxes for Electrical Systems

C. Section 26 05 43 – Underground Ducts, Manholes and Raceways for Electrical Systems.

1.04 REFERENCES

A. Definitions

1. Grounding

a. Grounding and grounding system shall be used interchangeable in this Section and the Specifications to mean, the means and methods by which all electrical and instrumentation systems are grounded for the purposes of attaining safety grounding, equalization of ground potential, reducing ground potential rises during fault events and the grounding of the ungrounded conductor as required by the NYCEC and Electric Utility Standards

2. Electric Utility

a. All references to the Electric Utility shall mean the Consolidated Edison Company or the Local Electric Utility having jurisdiction.

B. Reference Standards

1. NYCEC - New York City Electrical Code.

2. Electric Utility - Standards and Guidelines.

3. UL 467 - Electrical Grounding and Bonding Equipment.

1.05 DESCRIPTION

A. Not Used

1.06 QUALITY ASSURANCE

A. The grounding system maximum resistance shall not exceed 5 ohms under normally dry conditions. All structures and metal equipment containing electrical apparatus shall be connected to ground.

All grounding associated with the service feeders shall be in accordance with the requirements of the Electric Utility.

1.07 SUBMITTALS

A. Contractor shall submit Shop Drawings and material specifications for the approval of the Engineer. Submittals shall include, but not be limited to:

1. A list of proposed manufacturers with the products they produce proposed for the contract.
2. Manufacturer's catalog cuts for the grounding materials proposed for use.
3. Scaled Shop Drawings showing proposed routing and layout of the grounding system.

B. Field test report shall be submitted.

1.08 DELIVERY, STORAGE, AND HANDLING

A. The grounding equipment shall be delivered, stored and handled in accordance with this Section, the Specifications and the manufacturer's recommendations.

1.09 INCIDENTAL PARTS, SPECIAL TOOLS, AND SUPPLIES

A. Not Used

1.10 SPECIAL WARRANTY PROVISIONS / GUARANTEE PERIODS

A. Not Used

PART 2 - PRODUCTS

2.01 MANUFACTURERS

A. Ground cable shall be as manufactured by:

1. Erico, Solon
2. General Cable
3. Southwire
4. Or approved equal.

B. Ground rods shall be as manufactured by:

1. Erico, Solon
2. Blackburn/Thomas and Betts
3. Thompson Lightning Protection Inc
4. Or approved equal.

C. Bolted or compression grounding connectors shall be as manufactured by:

1. Burndy, Manchester

2. Thomas and Betts, Memphis
3 Erico
4. Or approved equal.

D. Welded grounding connections shall be as manufactured by:
1. Cadwell, Solon
2. Thermoweld
3. HA
4. Or approved equal.

E. Ground Resistance Tester shall be as manufactured by:
1. Fluke, Everett, WA.
2. Megger, Dallas, TX.
3. AEMC Instrument, Dover, NH.
4. Or approved equal.

2.02 MATERIALS / EQUIPMENT

A. Ground Cable
1. The ground cable shall be soft drawn bare stranded copper conforming to ASTM B8 and B189, No. 8 AWG minimum size.
2. The insulated cable for equipment grounding shall conform to the requirements of Section 26 05 20 – Low-Voltage Wires, Cables and Accessories.

B. Ground Rods
1. Ground rods shall be stainless steel, 3/4-inch diameter and 10 feet long.
2. Ground rods shall have a drive point at the lower ends. The upper end of each rod shall be equipped with bronze, clamp type connectors with not less than four bolts.

C. Grounding Connectors.
1. Compression connectors shall be heavy duty copper. Bolted connectors shall be copper alloy castings, designed specifically for the items to be connected, and assembled with Durium or silicone bronze bolts, nuts and washers.
2. Welded connections shall be by exothermic process utilizing molds, cartridges and hardware designed specifically for the connection to be made.

2.03 FABRICATION / ASSEMBLING / FINISHES

A. Not Used

2.04 SOURCE QUALITY CONTROL / SHOP TESTS

A. Not Used

PART 3 - EXECUTION

3.01 EXAMINATION / PREPARATION

A. Not Used

3.02 INSTALLATION

A. A complete ground grid system shall be installed as shown on the Contract Drawings.

B. Ground cable shall be installed around perimeter of structures at a minimum of 2 feet-6-inches below grade.

C. Ground rods shall be installed 2 feet below grade, 2 feet from foundation walls and shall extend 10 feet vertically into the earth or horizontally not less than 36 inches below grade.

D. Test points shall be installed at locations and in accordance with the details shown on the Contract Drawings.

E. Equipment shall be connected in accordance with the details shown on the Contract Drawings. All steel column and underground connections shall be welded except for test points.

F. Metal casings or supporting frames of electrical equipment, such as transformers, panel boards, control panels, and individual motor controllers shall be grounded. The equipment shall be thoroughly grounded to the facility grounding system. All metal conduits leaving all electrical equipment shall be grounded. Grounding type fittings shall be installed on flexible conduits.

G. An insulated cable for equipment grounding shall be installed with the phase conductors within the conduit for the nominal 120 volt and higher power, lighting and control circuits.

3.03 FIELD TESTING / QUALITY CONTROL

A. After installation, the completed ground system shall be field tested for operation and conformance. The field tests shall be witnessed by the Engineer and certified by the Contractor. The Contractor shall provide testing consisting of the following:

1. Resistance testing shall be made using approve Earth Ground Resistance Testers not less than 48 hours after rainfall.

   a. Resistance values above 5 ohms shall be brought to the Engineer's attention with remedial recommendations.

2. Grounded cables and metal parts shall be continuity tested. The conduit system shall be ground tested in accordance with the requirements of Section 26 05 33 – Raceway and Boxes for Electrical Systems.

B. The Contractor shall provide a Field Test Report, the report shall identify the testing performed and the results obtained.

3.04 STARTUP / DEMONSTRATION

A. Not Used

3.05 ADJUSTING / PROTECTION / CLEANUP

A. Not Used

END OF SECTION

SECTION 26 05 29 – HANGERS AND SUPPORTS FOR ELECTRICAL SYSTEMS – ESCR IG/PC

PART 1 - GENERAL

1.01 SUMMARY

A. Requirements for providing supporting devices.

1. Supporting devices shall be provided in accordance with the requirements specified under this Section, the Specifications and the Contract Drawings.
2. The supporting devices shall be a complete system for the equipment.
3. The work shall include providing all required support devices to properly mount and secure all equipment furnished under this Contract.

B. This Section also includes equipment anchorage and restraints suitable to meet the specified seismic requirements.

1.02 PAYMENT

A. There is no separate payment provision for this Section.

1.03 RELATED SECTIONS

A. Section 26 05 33 - Raceways and Boxes for Electrical Systems.

1.04 REFERENCES

A. Supporting devices shall comply with the latest applicable provisions and recommendations of the following:

1. ASTM A1011/A1011M - Standard Specification for Steel, Sheet and Strip, Hot-Rolled, Carbon, Structural, High-Strength, Low-Alloy, High-Strength, Low-Alloy with Improved Formability, and Ultra-High Strength.
2. ASTM B633 - Standard Specification for Electrodeposited Coatings of Zinc on Iron and Steel.
3. NYCEC - New York City Electrical Code.
4. NYCCC - New York City Construction Code.
5. MFMA 103 - Guidelines for the Use of Metal Framing.
6. MFMA 4 - Metal Framing Standards Publication.

1.05 DESCRIPTION

A. Not Used

1.06 QUALITY ASSURANCE

A. General

1. All channels, fittings and hardware used in the supporting system shall be in accordance with MFMA 4 and MFA 103.
2. The design of the support system shall be the responsibility of the Contractor. The Contractor shall provide the proper sized rods, channels, fittings, brackets and appurtenances necessary to adequately support the equipment.

3. The Contractor shall retain the services of a Licensed Engineer, registered in the State of New York, to prepare support details for equipment exceeding 50 pounds in weight. The Engineer shall stamp the support system design details.

B. Seismic Requirements

1. Equipment assemblies such as secondary unit substations, switchgear, transformers and panelboards shall be certified to meet seismic requirements of the New York City Building Code.
2. The Contractor shall provide equipment anchorage details for all equipment certified to meet seismic requirements. The details shall be coordinated with the manufacturer's equipment mounting provisions.
3. Electric conduit shall include seismic restraints in accordance with the requirements of Section 26 05 33 – Raceways and Boxes for Electrical Systems.
4. The Contractor shall retain the services of a Licensed Engineer, registered in the State of New York, to prepare the seismic anchorage and restraint details. The Engineer shall stamp the seismic anchorage and restraint details.

1.07 SUBMITTALS

A. Contractor shall submit Shop Drawings and material specifications for approval by the Engineer.

B. Submittals shall include, but not be limited to the following:

1. Manufacturer's catalog cuts for the supporting devices proposed for use with specifications and other data required to demonstrate compliance with the specified requirements.
2. Scaled Shop drawings showing dimensions and locations of all items and clearance requirements.
3. Support design details and equipment seismic anchorage and restraint details, stamped by a Licensed Engineer as required.

1.08 DELIVERY, STORAGE, AND HANDLING

A. The supporting devices shall be delivered, stored and handled in accordance with this Section, the Specifications and the manufacturer's recommendations.

1.09 INCIDENTAL PARTS, SPECIAL TOOLS, AND SUPPLIES

A. Not Used

1.10 SPECIAL WARRANTY PROVISIONS / GUARANTEE PERIODS

A. Not Used

PART 2 - PRODUCTS

2.01 MANUFACTURERS

A. Supporting devices shall be manufactured by:

1. B-Line, Highland
2. Thomas and Betts Kindorf,

3. Unistrut
4. Or approved equal.

2.02 MATERIALS / EQUIPMENT

A. Channels, Fittings and Brackets

1. The Contractor shall provide channels, fittings, brackets and related hardware for mounting and supporting the electrical equipment. Anchor bolts, concrete inserts and related hardware for proper support of equipment shall also be provided. All equipment necessary to meet the seismic requirements specified shall be provided.
2. Channels shall conform to ASTM A1011/A1011M. Channels shall have a minimum thickness of 12 gauge. The cross sectional width dimension shall be 1-1/2 inch minimum. The depth shall be as required to satisfy load requirements.
3. Attachment holes, when required, shall be factory punched on hole centers approximately equal to the cross sectional width and shall be 9/16 inch diameter.
4. Fittings and brackets shall have 9/16 inch diameter holes on centers identical to the channel or as required to align with the channel holes. Fittings and brackets shall have the same width as the channel and shall be 1/4 inch thick minimum. Fittings and brackets shall mate properly with the channel.
5. All channels, fittings, brackets and related hardware shall be steel and have an electro-plated zinc finish according to ASTM B633.
6. In corrosive and classified areas, channels, fittings, brackets and related hardware shall be type 316 stainless steel or PVC coated.

B. Conduit Hangers, Supports and Inserts

1. The Contractor shall provide channels, rods, straps, anchors and related hardware for support of the exposed electric conduit system.
2. The Contractor shall also provide anchor bolts, concrete inserts and related hardware for proper support of equipment. All equipment necessary to meet the seismic requirements specified shall be provided.
3. Conduit hangers, supports and inserts shall be in accordance with Section 26 05 33 – Raceway and Boxes for Electrical Systems.

2.03 FABRICATION / ASSEMBLING / FINISHES

A. Not Used

2.04 SOURCE QUALITY CONTROL / SHOP TESTS

A. Not Used

PART 3 - EXECUTION

3.01 EXAMINATION / PREPARATION

A. Not Used

3.02 INSTALLATION

A. All supporting devices shall be installed level, parallel and perpendicular to building walls and floors, such that the support system is installed in a neat and professional manner.

B. All holes in hung ceilings for support rods and other equipment shall be made adjacent to bars where possible, to facilitate removal of ceiling panels.

C. The channels, fittings and brackets shall be rigidly bolted together and braced to make a substantial supporting framework support system.

D. Where switchgear, unit substations and other electrical equipment is being installed on concrete pads, the Installer shall furnish leveling channels to the General Contractor. The General Contractor shall install the leveling channel in the concrete pads. Seismic certified equipment shall be anchored in accordance with the seismic anchorage details.

E. All equipment fastenings to steel columns, beams and trusses shall be by beam clamps. In lieu of beam clamps, equipment may be welded to steel structures, subject to Engineer approval.

F. No holes shall be drilled in any steel columns, beams and trusses.

G. Hanger rod supports shall be installed such that threaded rod is parallel to building walls and perpendicular to floors.

3.03 FIELD TESTING / QUALITY CONTROL

A. Not Used

3.04 STARTUP / DEMONSTRATION

A. Not Used

3.05 ADJUSTING / PROTECTION / CLEANUP

A. Not Used

END OF SECTION

SECTION 26 05 33 – RACEWAYS AND BOXES FOR ELECTRICAL SYSTEMS – IG/PC

PART 1 - GENERAL

1.01 SUMMARY

A. Requirements for providing conduit system.

1. The conduit system shall be provided in accordance with the requirements specified under this Section, the Specifications and the Contract Drawings.
2. The conduit system required shall be provided with all rigid and flexible conduits, boxes, fittings, supports, hangers and inserts and other conduit accessories as required for the installation of the electric wire and cable.

1.02 PAYMENT

A. There is no separate payment provision for this Section.

1.03 RELATED SECTIONS

A. Section 05 05 23.02 - Miscellaneous Metal Fastening.

B. Section 09 91 00 - Painting.

C. Section 40 05 07 - Hangers and Supports for Process Piping.

1.04 REFERENCES

A. Definitions

1. Conduit System: Shall mean a complete installation comprising all rigid conduit and flexible connections, boxes, fittings, supports, hangers, inserts and other conduit accessories as required for the installation of electric wires and cables.
2. Conduit Accessories: Shall mean all fittings required to ensure a complete conduit system installation. Conduit accessories shall include, but is not limited to, expansion, deflection, seal and drain fittings, hubs, bushings, duct seal, tags, markers, thruwall seals and bushings.

B. References

1. Electric conduit system shall comply with the latest applicable provisions and recommendations of the following:
2. NYCEC - New York City Electrical.
3. IEEE 142 - Recommended Practice for Grounding of Industrial and Commercial Power Systems.
4. UL 6 - Rigid Metal Electrical Conduit -Steel.
5. UL 50 - Standard for Enclosures for Electrical Equipment.
6. UL 360 - Standard for Liquid-Tight Flexible Metal Conduit.
7. UL 514A - Metallic Outlet Boxes.
8. UL 514B - Conduit, Tubing and Cable Fittings.
9. ANSI C80.1 - Electric Rigid Steel Conduit.

10. ASTM D870 - Standard Practice for Testing Water Resistance of Coatings Using Water Immersion.
11. ASTM D1735 - Standard Practice for Testing Water Resistance of Coatings Using Water Fog Apparatus.
12. NEMA RN-1 - PVC Externally Coated Galvanized Rigid Steel Conduit and Intermediate Metal Conduit.

1.05 DESCRIPTION

A. Not Used

1.06 QUALITY ASSURANCE

A. Not Used

1.07 SUBMITTALS

A. Contractor shall submit Shop Drawings and material specifications for the approval of the Engineer. Submittals shall include, but not be limited to:

1. A list of proposed manufacturers with the products they produce proposed for the contract.
2. Manufacturer's catalog cuts for the conduit, boxes, fittings and supports proposed for use.
3. Construction details of conduit racks and other conduit support systems with seismic restraint details and calculations signed by a licensed Engineer.
4. Scaled Shop Drawings showing proposed routing of all conduits, inclusive of conduits embedded in structural concrete and conduits directly buried in earth.
5. Scaled Shop Drawings showing locations of pull and junction boxes and all penetrations in walls and floor slabs.
6. Field test report.

1.08 DELIVERY, STORAGE, AND HANDLING

A. Electric conduit system shall be delivered, stored and handled in accordance with the Specifications, the manufacturer's instructions and the following:

1. Conduit shall be delivered to the work in standard bundles having each length suitably marked with the manufacturer's name or trademark and bearing the label of the Underwriters' Laboratories, Incorporated inspection service.

1.09 INCIDENTAL PARTS, SPECIAL TOOLS, AND SUPPLIES

A. Not Used

1.10 SPECIAL WARRANTY PROVISIONS / GUARANTEE PERIODS

A. Not Used

PART 2 - PRODUCTS

2.01 MANUFACTURERS

A. PVC coated rigid steel conduit shall be as manufactured by:
   1. Robroy Industries, Gilmer, TX;
   2. OCAL by Thomas & Betts, Memphis, TN;
   3. Or approved equal.

B. Stainless steel conduit shall be as manufactured by:
   1. Calbrite Stainless Steel Conduit Systems, Hobart, IN
   2. Gibson Stainless and Specialty, Greensburg, PA
   3. Or approved equal.

C. Hangers, Supports and Inserts shall be as manufactured by:
   1. B-Line, Highland, IL;
   2. Kindorf, Harahan, LA;
   3. Or approved equal.

D. Flexible conduit shall be as manufactured by:
   1. Anaconda American Brass Company, Rolling Meadows, IL;
   2. Electric-Flex Company, Roselle, IL;
   3. Or approved equal.

E. Hazardous area flexible conduit shall be as manufactured by:
   1. Crouse Hinds Company, Syracuse, NY;
   2. Appleton Electric Company, Rosemont, IL;
   3. Or approved equal.

F. Unions in hazardous locations shall be as manufactured by:
   1. Crouse-Hinds Syracuse, NY;
   2. Or approved equal.

G. Unions in non-hazardous areas shall be as manufactured by:
   1. Thomas & Betts, Memphis, TN;
   2. Or approved equal.

H. Expansion and deflection fittings shall be as manufactured by:
   1. Crouse-Hinds, Syracuse, NY;
   2. Appleton Electric, Rosemont, IL;
   3. Or approved equal.

I. Sealing fittings shall be as manufactured by:
   1. Crouse-Hinds, Syracuse, NY;

2. Appleton Electric, Rosemont, IL;
3. Or approved equal.

J. Drain fittings shall be as manufactured by:
1. Crouse-Hinds, Syracuse, NY;
2. Appleton Electric, Rosemont, IL;
3. Or approved equal.

K. Conduit hubs shall be as manufactured by:
1. O-Z/Gedney Rosemont, IL;
2. Thomas and Betts, Memphis, TN;
3. Or approved equal.

L. Conduit bushings and locknuts shall be as manufactured by:
1. a. O-Z/Gedney, Rosemont, IL;
2. b. Thomas and Betts, Memphis, TN;
3. c. Or approved equal.

M. Duct seal shall be as manufactured by:
1. American Polywater Corp, Stillwater, MN;
2. O-Z/Gedney, Rosemont, IL;
3. Ideal Industries, Sycamore, IL;
4. Or approved equal.

N. Thruwall seals shall be as manufactured by:
1. O-Z/Gedney Rosemont, IL;
2. Or approved equal.

O. Floor seals shall be as manufactured by:
1. O-Z/Gedney, Rosemont, IL.;
2. Or approved equal.

P. Sealing bushings shall be as manufactured by:
1. O-Z/Gedney, Rosemont, IL;
2. Or approved equal.

Q. Fire stop fittings shall be as manufactured by:
1. O-Z/Gedney, Rosemont, IL;
2. Or approved equal.

R. Thru-wall barriers shall be as manufactured by:
1. Crouse-Hinds, Syracuse, NY;
2. Or approved equal.

S. Conduit tags shall be as manufactured by:

1. Seton Nameplate Corporation, Branford, CT;
2. Or approved equal.

T. Conduit markers shall be as manufactured by:

1. Thomas and Betts, Memphis, TN;
2. Or approved equal.

U. Terminal blocks shall be as manufactured by:

1. Allen-Bradley Company, Milwaukee, WI;
2. General Electric Company, Fairfield, CT;
3. Or approved equal.

V. Junction Boxes shall be as manufactured by:

1. Carlon, Brookfield, WI,
2. Kraloy, London, ON,
3. Or approved equal.

2.02 MATERIALS / EQUIPMENT

A. Rigid Steel Conduit

1. The Contractor shall provide rigid steel conduit. All steel conduit shall comply with the requirements of ANSI C80.1, and UL 6.
2. Both the inside and outside surfaces of the rigid steel conduit shall be protected against corrosion by a coating of zinc applied by the hot-dip galvanizing process.
3. Conduits, elbows and couplings shall be rigid, heavy wall, mild steel, hot dip galvanized. Conduits, elbows and couplings shall have a smooth interior with tapered threads and carefully reamed ends. Conduit size shall be 3/4-inch minimum and shall conform to UL 6.
4. Conduits, elbows and couplings shall include a PVC coating for all areas. For conduits located indoors in dry, dusty areas the use of rigid steel conduit without PVC coating shall be permitted.
5. PVC coating of conduit shall be factory applied and shall include a smooth 2 mil thick urethane interior coating and 40 mil thick polyvinyl chloride exterior coating. PVC coated conduit shall conform to NEMA RN-1, ASTM D870, ASTM D1735 and UL 6. The exterior PVC coating color shall be gray and listed UL DYJC. The threads of conduits that have been cut in the field to size shall have the same PVC coating applied.

B. Stainless Steel Conduit

1. The Contractor shall provide stainless steel conduit. All conduit shall comply Article 344 of ANSI/NFPA 70 and UL 6A.
2. Conduits, elbows, and couplings shall by type 316 stainless steel. Conduits, elbows, and couplings shall have standard NPT threads. Conduit size shall be ¾ inch minimum.

C. Hangers, Supports and Inserts

1. The Contractor shall provide hangers, supports and inserts for support of the electric conduit system. The supports shall securely attach the electric conduit system to the channel and structure.
2. The electric conduit system shall be designed, constructed and installed suitable for earthquake regulations in accordance with the seismic requirements of the New York City Building Code and the Uniform Building Code for Zone 2A application.
3. Transverse and longitudinal bracing shall be provided as required to brace the electric conduit for the seismic requirements specified.
4. All drilled in type concrete inserts shall be expansion shields or anchors conforming to Section 05 05 23.02 – Miscellaneous Metal Fastenings and 40 05 07 - Hangers and Supports for Process Piping. In corrosive locations, concrete inserts shall be 316 stainless steel.
5. Hangers and supports shall be in accordance with the requirements of Section 40 05 07 - Hangers and Supports for Process Piping except beam clamps, hanger rods and hardware shall be steel with electro-plated zinc finish. This shall also include bolts, nuts and washers. In corrosive locations, hangers and support hardware shall be type 316 stainless steel or factory applied 40 mil thick PVC coated.

D. Flexible Metallic Conduit

1. The Contractor shall provide flexible metallic conduit where required to permit movement of connected devices and where it is impracticable to complete runs with rigid conduit subject to the limitations imposed by the NYCEC.
2. Flexible conduit used indoor in non-hazardous dry dusty areas shall be non-liquid-tight, with a steel core.
3. Flexible conduit used outdoors and in non-hazardous, wet and corrosive areas shall be UL Listed and include a hot dipped galvanized steel core with a liquid-tight, polyvinyl chloride cover and shall include a built-in copper ground for sizes 3/4-inch through 1-1/4 inch.
4. For hazardous areas flexible conduit shall include a brass inner core with a bronze outer braid and protective neoprene plastic coating. End fittings shall be steel, brass or bronze.

E. Outlet Boxes and Fittings

1. The Contractor shall provide outlet boxes and fittings for rigid and flexible conduit. The outlet boxes and fittings required for the work which constitutes a part of the conduit system, shall be of approved types.
2. Fittings, bodies and boxes installed on PVC coated conduits shall have interior and exterior PVC coatings equivalent and corresponding to that of the conduit on which they are installed
3. For outdoor, wet and corrosive areas, conduit fittings and outlet bodies shall be cast gray iron alloy, cast malleable iron bodies and covers. All units shall be gasketed, watertight, and threaded with five full threads and shall have rust-proofing in accordance with the requirements of this Section.
4. Threaded cast ferrous metal, hub type outlet boxes shall be used throughout, except in the interior walls of superstructures and in roof slabs protected by built-up roofing

where pressed steel boxes shall be installed. Cast iron or alloy outlet boxes of the proper size and depths for the application, complete with watertight gaskets and covers secured by brass screws, shall be furnished and installed as indicated on the Contract Drawings or as required by the conduit run. Outlet boxes, furnished and installed for the installation of lighting fixtures, switches and receptacles in a future contract, shall be furnished with watertight gaskets and blank covers.

5. For non-hazardous, indoor dry dusty areas pressed steel boxes of the proper size and depths for the application shall be provided. Boxes shall be rated NEMA 12, not less than No. 14 U.S. Standard Gauge (0.078 inch). The conduit openings shall be provided with oil-resistant gaskets. Conduits shall be fastened to these boxes with locknuts and bushings, and all unused outlets or holes shall be left sealed.
6. All outlet boxes intended for the support of fixtures shall be provided with approved fixture studs.
7. For concealed conduit runs in outside walls and all exposed conduit work, connections to boxes and fittings shall be made through threaded holes, unless otherwise approved by the Engineer. For concealed conduit work in non-hazardous areas in other than outside walls, connections between conduit and boxes may be made with drilled holes, using locknuts and bushings.
8. Where necessary unions may be used.
   a. In non-hazardous locations unions shall be universal or Erickson
   b. In hazardous locations unions shall be type UNF, UNL or YNY.
9. All boxes installed for concealed conduit, shall be provided with extension rings or plaster rings and covers as required. For non-hazardous, dry indoor areas stainless 302/304, satin beveled steel cover and device plates for surface mounted boxes shall be used. For corrosive locations, galvanized ferrous and galvanized cast ferrous metal cover and device plates with neoprene gaskets shall be used.
10. Outlet boxes and fittings installed on PVC coated conduit shall also include interior and exterior coatings equivalent to the conduit.

F. Conduit Accessories

The Contractor shall provide conduit accessories for use with the conduit system. The conduit accessories shall be of approved types.

1. Expansion and Deflection Fittings:
   a. Expansion and deflection fittings shall be made up of non-corrodible parts and shall provide for ample longitudinal and lateral movement. A suitable bond shall provide a low resistance, continuous longitudinal path for ground currents.
   b. Expansion and deflection fittings shall be watertight cast iron, malleable iron or hot dipped galvanized. Fittings shall be corrosion-resistant, UL listed and compatible with the conduit system.
   c. Expansion /deflection fittings shall provide both expansion and deflection in a single fitting in accordance with the following:
      1) Axial expansion or contraction up to 3/4-inch.
      2) Angular misalignment up to 30 degrees.
      3) Parallel misalignment up to 3/4-inch.

4) Expansion fittings shall provide expansion /contraction with eight-inch total movement.

2. Sealing Fittings:
   a. Sealing fittings shall be cast gray iron alloy or cast malleable iron or copper free aluminum with zinc electroplate and lacquer or enamel finish.
   b. Sealing fittings shall have an ample opening with threaded closure for access to conduit hub for making dam. Sealing fiber and compound shall be suitable for use with the fitting and shall be the products of the fitting manufacturer.
   c. For corrosive locations, seal fittings shall include interior and exterior coatings equivalent to the PVC conduit coating specified under this Section.
3. Drain Fittings:
   a. Drain fittings shall be a combination device designed to provide ventilation to minimize condensation and drains accumulated condensate.
   b. The combination drain/breather fitting shall be 3/8 inch male thread size with stainless steel body.
4. Transition Fittings:
   a. Transition fittings shall be used where metallic conduit enters PVC boxes.
5. Conduit Hubs:
   a. Conduit hubs shall be threaded, insulated throat type with bonding screw locknut.
   b. The conduit hub and locknut shall be malleable iron or zinc and shall include a 90-degree C insulating surface and a sealing ring for a water tight and dust tight connection.
6. Conduit Bushings:
   a. Conduit bushings shall be insulated, grounding type with lay-in-lug connection. Two locknuts shall be provided for each bushing.
   b. The conduit bushing and locknuts shall be steel, malleable iron or zinc. The bushing shall include a 90 degrees C insulating surface.
7. Duct Seal:
   a. Duct seal shall be a suitable for forming a water and gas tight seal between cables and conduits.
   b. Completed seal shall be resistant to gasoline, oils, dilute acids and bases.
   c. The completed seal shall be capable of blocking water pressure of at least 10 psi.
8. Thruwall Seals and Bushings:
   a. New Construction
      1) WSK and WCSC type thruwall seals shall be used for conduits and cables passing through exterior subsurface walls and exterior concrete walls.
      2) CSMI type seal bushings at the inside and CSMC type seal bushings at the outside of the structure in the same core bit-drilled hole shall be used for conduits passing through interior concrete wall, interior floors, interior block

walls, exterior block walls, exterior subsurface walls, exterior concrete walls, floor slabs.

3) CFS and or CFSI type fire stop fittings shall be used for conduits passing through fire rated floors and walls.

4) TW type thru wall type barriers shall be use for multiple conduit runs passing through interior or exterior and fire rated walls.

b. Existing Construction

1) SK and FSCS type seals shall be used for conduits and cables passing through concrete floors and floor slabs.

2) CSMI type seal bushings at the inside and CSMC type seal bushings at the outside of the structure in the same core bit-drilled hole shall be used for conduits passing through interior concrete wall, interior floors, interior block walls, exterior block walls, exterior subsurface walls, exterior concrete walls, floor slabs.

3) CFS and or CFSI type fire stop fittings shall be used for conduits passing through fire rated floors and walls.

4) TW type thru wall type barriers shall be use for multiple conduit runs passing through interior or exterior and fire rated walls.

9. Conduit Tags:

a. Conduit tags shall be 19 gauge, 1-1/2-inch diameter round brass which shall be secured to the conduit with annealed brass wire.

b. Conduit tags shall be clearly stamped with the conduit number in conformity with the conduit and cable schedule or as directed by the Engineer.

10. Conduit Markers:

a. Conduit identification markers shall be self-sticking color-coded tape. Identification tape shall be two inches wide and colored in accordance with the color banding specified under this Section.

G. Terminal, Junction and Pull Boxes.

1. The Contractor shall provide terminal, junction and pull boxes as shown on the Contract Drawings and where otherwise required, or as directed by the Engineer.

2. Boxes located indoor in dry, dusty areas shall be NEMA Type 12, constructed of welded and galvanized sheet steel. Boxes of dimensions 24 inches and less shall be 14 USS standard gauge metal. Boxes of dimensions greater than 24 shall be 12 USS standard gauge metal, except 10 USS standard gauge shall be used for boxes with any dimension of 36 inches or more. Boxes located in other areas shall conform to the following area classifications:

a. For submersible locations boxes shall be submersible NEMA Type 6P. Boxes shall be constructed of PVC and shall include a foam-in-place gasketed lid attached with stainless steel screws.

3. Unless otherwise noted, pull and junction boxes shall be provided with covers held in place by brass screws. Terminal boxes shall be provided with terminal block supports and approved hinged covers fitted tightly against a gasket and secured by lug bolts and wing nuts. Hinges, lug bolts, wing nuts and other fittings shall be made of an

approved, non-ferrous, non-corrodible metal. All boxes shall be provided with rabbeted gaskets or flange gaskets securely held in place.

4. Tapping for threaded connections to outlet boxes, junction boxes, pull boxes and conduit fittings in non-explosion proof construction shall conform to the following:
   a. All threads shall be tapered.
   b. If threads for connection of conduit are tapped all the way through a hole in an enclosure, or if an equivalent construction is employed, there shall be not less than 3-1/2 threads in the metal and the construction of the enclosure shall be such that a suitable conduit bushing can be properly attached.
   c. If threads for connections of conduit are not all the way through a hole in a box wall, conduit hub or the like, there shall be not less than five full threads in the metal and there shall be a smooth, well rounded inlet hole for the conductors, which shall afford protection to the conductors equivalent to that provided by a standard conduit bushing and which shall have an internal diameter approximately the same as that of the corresponding trade size of rigid conduit. The threaded hole shall be provided with a conduit end stop.
   d. Tapping for threaded connections for explosion proof construction shall conform to the requirements of the NYCEC for construction in Class I, Division 1, and hazardous locations.
5. Cast iron or cast ferrous alloy outlet boxes, junction boxes, pull boxes, conduit fittings and conduit accessories such as box covers shall be rust-proofed by zinc coating applied by the "hot-dip" process or shall be given a rust protective coating applied by either of the following methods:
   a. Method A:
      1) Castings shall be given a mechanical and chemical cleaning.
      2) Castings shall be given a phosphoric acid type dip.
      3) Then a coating of zinc chromate primer shall be applied, and finally
      4) A coating of baked enamel finish shall be applied over the outside and inside surfaces of the castings.
   b. Method B:
      1) Castings shall be given a mechanical and chemical cleaning.
      2) Then a coating of cadmium shall be deposited electrolytically.
      3) Then a coating of zinc shall be applied by electroplating.
      4) Then a vinyl resin base aluminum lacquer shall be applied.
6. Stamped steel outlet boxes, junction boxes and box covers shall be rust-proofed by a zinc coating applied by an electro-galvanizing or sherardizing process. Fabricated sheet steel boxes shall be formed from galvanized sheet steel. Welded joints shall be touched up with aluminum lacquer and boxes and covers shall be given a shop priming coat of zinc chromate rust inhibiting paint.
7. Terminal blocks shall be used within terminal boxes for termination of prepared conductors No. 10 AWG and smaller. Terminal blocks shall be in accordance with the following:

a. Terminal blocks shall be high density, screw terminal type suitable for rail mounting with quantities sufficient for the conductors to be terminated plus 20 percent spare.

b. Terminal blocks shall be NEMA rated, 600 volt, 35 ampere suitable for 85 degrees C.

c. Terminal block components shall have stainless steel and tin plated copper alloy components, backed out captive screws and marking surface.

2.03 FABRICATION / ASSEMBLING / FINISHES

A. Not Used

2.04 SOURCE QUALITY CONTROL / SHOP TESTS

A. Not Used

PART 3 - EXECUTION

3.01 EXAMINATION / PREPARATION

A. All conduits shall be installed in accordance with the requirements specified under this Section and in conformity with the sizes stated in the Specifications or shown on the Contract Drawings. They shall be installed complete with all accessories, fittings and boxes, in an approved and workmanlike manner so as to provide proper raceways for electrical conductors.

B. The Contractor's attention is called to the fact that all conduit runs indicated on the Contract Drawings are shown diagrammatically for the purpose of outlining the general method of routing the conduits to avoid interference. Where conduit runs are not shown, it shall be the responsibility of the Contractor to establish the runs required based upon the various systems shown on the Contract Drawings.

C. Should any structural difficulties prevent the setting of cabinets, boxes, conduits, etc., at points shown on the plans, deviations therefrom as determined by the Engineer will be permitted and shall be made without additional cost.

D. All exposed steel conduits, fittings, boxes, straps, racks and hangers shall be painted in conformity with Section 09 91 00 - Painting. PVC coated conduit systems shall not be painted. Paint shall match the gray color of the PVC coated conduits.

E. Conduits shall be tagged using conduit tags. Conduit tags shall be installed where conduits terminate in equipment and enclosures.

F. Exposed conduits shall be color banded using conduit markers. Markers shall also include operating voltage when over 600 volts. Conduit markers shall be installed 360 degrees, double wrap around conduit exterior. Conduit markers shall be installed where conduits enter equipment, boxes, within each room, at wall penetrations and 50 feet on centers in each area. When exposed conduits are to be painted, markers shall be installed after the conduits are painted. Color banding shall be in accordance with the following:

1. 120/208 volt AC: Gray.

2. 277/480 volt or 480 volt AC: Sand.

3. Low Voltage Switching, Instrumentation and Controls System: Black.

G. All enclosing cases, including condulets and conduit bodies, for fire, sprinkler, smoke detection, and associated systems alarm apparatus and equipment shall be painted or

colored Fire Department “RED”, in accordance with New York City Building Code, unless otherwise required by the local Authority Having Jurisdiction (AHJ).

3.02 INSTALLATION

A. Installation of Raceways

1. The Contractor shall install all exposed raceways parallel or at right angles to walls and ceiling beams. Changes in directions shall be made with bends, elbows and pull boxes. All parallel runs shall be spaced uniformly throughout and secured in place with hangers and fasteners. Brace raceways to satisfy the specified seismic requirements in accordance with the restraint details.

2. Conduits, where exposed, shall in all cases be substantially supported in an approved manner, but they shall not be fastened to or come in contact with any other pipes, ducts or other work of a similar nature. In all exposed work, approved channel or angle iron hangers, racks, one-hole straps or a combination thereof shall be provided to support the conduits. Where conduits are supported with one-hole straps, spacers shall be used to provide 1/4-inch minimum clearance between the conduits and walls or ceilings.

3. Hanger rods for trapeze type hangers shall be not less than 5/8 inch diameter. Conduit supports shall be located at intervals not exceeding 8 feet. Conduits shall be securely fastened to each support with U-bolts, straps or clamps.

4. All concealed conduits shall be placed in walls, floors, ceilings or slabs at the proper time in accordance with the progress of the structural work. The Contractor shall cooperate in every respect in meeting schedules and shall not delay the structural work unnecessarily.

5. Conduits embedded in concrete shall be blocked and braced in place by use of adequate conduit separators to prevent displacement during the pouring of concrete. The Contractor will be held responsible for proper position of conduits and shall rearrange any conduit that may be displaced while concrete is poured, without additional cost.

6. Where conduit runs are to be concealed and the Contractor fails to place such conduit in sufficient time to be included in the structures and the structures are completed without such conduit, the Contractor shall install such runs either concealed or exposed as directed by the Engineer, with no extra payment for additional work or for more conduit than the original lengths.

7. Embedded conduit shall be run in structural concrete in the center of slabs and walls and above waterstops. Conduit connections shall be made watertight. Contractor shall confirm that concrete thickness is sufficient for embedding the quantity of conduits intended. Unless specifically shown otherwise on the Contract Drawings or stated in the Detailed Specifications, embedded conduits shall be in accordance with the following criteria:

   a. Minimum concrete thickness shall be as follows:

      1) For concrete 16 inches thick and less, the minimum concrete thickness shall be 11.5 inches plus the depth of the largest conduit assembly. The conduit assembly depth shall be from the top of the uppermost conduit to the bottom of the lowest conduit.

2) For concrete greater than 16 inches thick, the minimum concrete thickness shall be 13.5 inches plus the depth of the largest conduit assembly.

3) For concrete at foundation slabs, an additional inch shall be added to the minimum concrete thicknesses previously stated.

b. Conduit spacing shall be as follows:

1) Conduits shall be separated three times outer diameter of larger conduit center to center.

2) For multiple conduit layer assemblies, conduits shall be separated vertically three times outer diameter of larger conduit center to center.

3) When conduits cross at a given point, the conduits may be in direct contact and the angle of cross shall be 45 degrees or greater. Conduits may also cross within the vertical spacing of a multi-conduit layer assembly.

4) When conduits cross a structural expansion joint, conduits shall be separated three times outer diameter of larger conduit fitting center to center.

8. A run of conduit between outlet and outlet, between fitting and fitting or between outlet and fitting shall not contain more than the equivalent of three quarter bends, including those bends located immediately at the outlet or fitting.

9. Factory-made conduit bends or elbows shall be used wherever possible in making necessary changes in direction. Field bends shall be carefully made so as to prevent conduit damage or reduction in the internal areas. The radius shall not be less than six times the nominal diameters for the conduit with carefully matched bends on parallel runs so as to present a neat appearance.

10. All conduits, where cut, shall be carefully reamed to remove burrs. No running threads will be permitted. All screw joints shall be watertight. Conduits shall be fitted in an approved manner to all devices and boxes. The ends of all conduits shall be equipped with suitable approved conduit fittings. The ends of all empty conduits shall stub up six inches above the slab and shall be capped.

11. As far as practicable, conduits shall be pitched to drain to outlet boxes or otherwise so installed as to avoid trapping moisture. Trapped conduits in concealed construction shall be provided with outlet boxes for drainage. Where necessary drainage in outlet boxes or where dips are unavoidable in exposed conduits, a drain fitting shall be installed at the low point.

12. Thruwall type seals and conduit sealing bushings shall be installed for all conduits passing through concrete slabs, floors, walls or block walls.

13. Conduit runs shall be installed so as to avoid flues, heat sources, and steam or hot water pipes. A minimum separation of 12 inches shall be maintained where conduit crosses or parallels hot water, steam pipes or heat sources.

14. Where conduit enter or leave equipment located within electrical and control rooms the conduit shall be sealed and packed with a suitable duct seal compound.

15. A 250 pound tested polyethylene pull tape shall be provided in all empty conduits, with a minimum 8 inch of slack, double backed into the conduit. Conduit shall be protected immediately after installation by installing flat non-corrosive metallic discs and steel bushings designed for this purpose at each end. Discs shall not be removed until it is necessary to clean the conduit.

16. All conduit that is cut on the job shall be cut square and taper reamed to remove burrs before installation. Where steel conduit is cut and threaded on the site, it shall be coated before and after making connections.
17. Conduits embedded in concrete shall stub up 6 inches above the slab. A three inch high curb extending three inches from the outer surface of the conduit penetrating the floor shall be provided to prevent corrosion. Conduit stub-ups shall be terminated in couplings, slightly above the finished concrete curb.

B. Conduit Connections to Equipment.

1. At each motor, limit switch, solenoid valve, electrical control device or other electrically controlled or operated equipment, the Contractor shall install a complete conduit connection between the conduit system and the terminal box of the motor or the conduit connection point of the equipment.
2. Conduits installed in the conduit system shall be terminated in such locations as to permit direct connections to motors, devices or equipment.
3. Connections shall be made with rigid conduit if equipment is fixed and not subject to adjustment, mechanical movement or vibration. Rigid connections shall be provided with union fittings to permit removal of equipment without cutting, breaking or burning conduit.
4. Motors, transformers and equipment subject to adjustment, mechanical movement or vibration shall be connected with flexible metallic conduit.
5. Devices such as solenoid valves, small limit switches, etc., shall be connected with flexible metallic conduit arranged to prevent strain and distortion.
6. Flexible conduit connections shall be watertight unless the area of installation requires explosion-proof construction.

C. Installation of Boxes and Fittings.

1. All concealed outlet boxes shall be set in such a manner that they will be plumb and flush with the finished surface.
2. Boxes shall be installed rigidly and securely to the structure. Independent supports shall be provided where no walls or other structural surface exists.
3. Expansion and expansion/deflection fittings shall be installed where conduits cross structural expansion joints and at locations shown on the Contract Drawings. Fittings shall be installed on each conduit and incorporated into the expansion joints of structures, at right angles to the joint, to insure their proper functioning and preservation.
4. Expansion fittings shall be installed on exposed conduit runs exceeding 200 feet. Unless specifically shown otherwise on the Contract Drawings or stated in the Detailed Specifications, when crossing structural expansion joints larger than one inch, an expansion fitting shall also be installed together with an expansion/deflection fitting. The fittings shall be installed on each conduit run in accordance with manufacture's recommendations to provide the additional movement necessary.
5. All conduit connections in wet and corrosive locations shall be made up watertight and shall terminate at enclosures with an approved conduit hubs.
6. All conduit connections in dry and dusty locations shall terminate at enclosures with bushings and lock nuts. Terminations shall include one bushing and two lock nuts at

each location. Lock nuts shall be installed one inside and one lock nut outside the enclosure. All conduit shall be bonded to the safety ground.

7. At pull and junction boxes having any box dimension in excess of 18 inches, jumper type grounding bushings shall be installed on conduit ends and jumper wires shall be installed to bond all conduits and to bond conduits to boxes.
8. All insulated grounding bushings shall be bonded together and to the structure of the enclosure by a continuous, copper bonding wire.
9. Removable, flame-retardant, insulating cable supports shall be provided in all boxes with any dimension exceeding 3 feet.
10. Scratched PVC coated boxes and fittings damaged as a result of installation work shall be touched up by field applying PVC coatings. All touch up work shall be in strict conformance with manufacturer's recommendations.

D. Installation within Hazardous Areas.

1. Explosion-proof boxes and fittings shall be of a type approved by the Engineer. Boxes and fittings shall be of cast iron with finish as specified hereinbefore or of an aluminum alloy specially developed for use in hazardous areas.
2. Explosion-proof boxes shall be suitable for the installation of explosion-proof switches, receptacles, lighting fixtures or other devices as indicated. All conduit connections to such boxes shall be made with threaded fittings. Bushings and locknut connections shall not be used.
3. Conduits terminating at explosion-proof boxes, enclosing circuit opening equipment, shall be sealed at the entrance to the box with an approved compound-filled sealing fitting to prevent passage of explosive or combustible gases through the conduit. Where construction prevents the use of sealing fittings, the ends of the conduits shall be properly sealed with sealing compound.
4. Sealing fittings shall be installed to seal each conduit leading from or entering into hazardous locations. Exposed conduits passing through hazardous locations shall be sealed at point of exit and entrance.
5. The installation of explosion-proof boxes, fittings and all conduits in connection therewith shall conform to the requirements of the NYCEC for Class I, Division 1 Group D hazardous location.

E. Not Used

3.03 FIELD TESTING / QUALITY CONTROL

A. After installation, the electric conduit system shall be field tested. The field tests shall be witnessed by the Engineer and certified by the Contractor. The Contractor shall provide testing consisting of the following:

1. Each conduit shall be tested by pulling through a cylindrical mandrel as specified under this Section. Maintain a record of all conduits testing clear.
2. Conduit systems shall be ground tested in the presence of the Engineer, who will inspect all enclosures, pull and junction boxes for bonding to the safety green conductor pulled with the nominal 120 volt and higher power and control circuits, and for bonding of the conduit grounding bushing to this safety ground.

3. The separation of above safety grounding system from the instrumentation signal grounding shall be verified.
4. The Contractor shall provide a Field Test Report. The Report shall identify the testing performed and the results obtained.

3.04 STARTUP / DEMONSTRATION

A. Not Used

3.05 ADJUSTING / PROTECTION / CLEANUP

A. All conduits shall be carefully cleaned before and after installation and all inside surfaces shall be free from all imperfections likely to injure the cable. Conduits shall be cleaned in accordance with the following:

1. After erection of complete conduit runs, conduits shall be snaked with a suitable swab to which shall be attached an approved tube cleaner equipped with an approved cylindrical mandrel of a diameter not less than 85 percent of the nominal diameter of the conduit.
2. All conduits through which the mandrel will not pass shall be removed and replaced by the Contractor at own expense.
3. After snaking, the ends of the dead-ended conduits shall be protected with standard malleable iron caps to prevent the entrance of water or other foreign matter.
4. Conduit ends shall be protected after cleaning with caps to prevent entrance of water, concrete, debris or other foreign substance.

END OF SECTION

SECTION 26 05 48 – VIBRATION AND SEISMIC CONTROLS FOR ELECTRICAL SYSTEMS – IG/PC

PART 1 - GENERAL

1.01 SUMMARY

A. The Contractor shall furnish, install, test and place into satisfactory operation Vibration and Seismic Controls (V&SCs) for Electrical Systems complete with all auxiliary equipment as shown on the Contract Drawings and specified in the Specifications and this Section.

1.02 PAYMENT

A. There is no separate payment provision for this Section.

1.03 RELATED SECTIONS

A. Section 26 05 11 – General Electrical Requirements.

B. Section 26 05 27 - Grounding

C. Section 26 05 53 – Identification for Electrical Systems

1.04 REFERENCES

A. Definitions

1. All references to the Electric Utility or the Utility shall mean the Local Electric Utility having jurisdiction.

2. The Electric Utility is Con Edison.

3. Low-voltage as used in this Section and the Specifications shall mean all equipment, conductors, insulation systems and accessories intended for operation at less than 1000 volt and within the 600 V Class.

B. Seismic Restraint as used in this Section and the Specifications shall mean a fixed device (a seismic brace, an anchor bolt or stud, or a fastening assembly) used to prevent vertical and horizontal movement, or both vertical and horizontal movement, of an electrical system component during an earthquake.

C. VISCMA as used in this Section and the Specifications shall mean the Vibration Isolation and Seismic Control Manufacturers Association.

D. Reference Standards

1. ASCE 7-10 - Minimum Design Loads for Buildings and Other Structures

2. FEMA 413 - Installing Seismic Restraints for Electrical Equipment.

3. MISR Guide - Mason Industries Seismic Restraint Guidelines.

4. RS 9-6 - NYCBC 1968 Reference Standard RS 9-6 Earthquake Loads.

5. NYCBC 1613 - NYCBC Section 1613 - Earthquake Loads

6. NYCEAB - New York City Electrical Advisory Board

7. NYCBC - New York City Building Code.
8. NYCEC - New York City Electrical Code.

1.05 DESCRIPTION

A. The Contractor shall provide fully functional vibration and seismic controls for equipment installed under Divisions 26, 27, and 28.

B. The devices selected for vibration control or isolation for electrical system shall not transmit the vibrations to the building structure or foundations supporting building structure under normal operation.

C. The devices selected for seismic restraints or control should enable electrical equipment, conduits, components etc to resist seismic forces by the strength of their attachment to the building structure or move with the building structure and remain intact and functioning during and after an earthquake.

D. Equipment subject to requirement for vibration or seismic restraints includes but is not restricted to battery racks, bus ducts, cable trays, conduit, switchgear, generators, transformers, unit substations, variable speed drives and lighting fixtures.

E. Vibrations Control Devices (VCDs)

1. Provide vibration isolators, base frames and inertia bases of sufficient size and design to assure that deflection and stability requirements as specified in this Section are met.
2. Isolators shall be provided to deflect uniformly under operating loads.
3. Steel springs shall be selected to perform their function without undue stress or overloading.
4. All isolators shall have a minimum ¼” thick elastomeric or fiber glass acoustical pad within the vertical load path.
5. Stable steel springs shall be designed to operate in the linear portion of their load versus deflection curve and must be linear over a deflection range of not less than 50 percent above the specified deflection.
   a. The ratio of lateral to vertical stiffness shall be not less than 0.8.
   b. The designed deflection of each spring must be at least 75% of specified deflection of the spring.
6. Where detailed in this Section, the equipment Section or shown on the Contract Drawings all structural steel bases supporting vibration isolated equipment, including concrete filled inertia bases, shall be designed and fabricated by the vibration isolation manufacturer.
   a. Unless otherwise noted in the Contract Documents, all equipment mounted on vibration isolated bases shall have a minimum operating clearance of 2" between the base and floor or support beneath.

F. Seismic Control Devices (SCDs)

1. All seismic restraint devices shall meet the following minimum requirements:
   a. The snubber/restrained isolator for isolated equipment shall include a resilient element that will ensure that no un-cushioned shock can occur (excluding cable restraints).

b. It shall be possible to visually inspect the resilient snubbing material for damage and allow for replacement, if necessary.

c. All snubbers to include a maximum air gap of 0.25” (6mm).

d. Seismic restraint devices and systems shall be designed to offer seismic restraint in all directions.

e. Seismic restraint capacities shall to be verified by one of the following methods:

1) A Nationally Recognized Testing Laboratory (NRTL).

2) Certified by a registered Professional Engineer licensed in the State of New York.

3) By a nationally recognized agency, such as VISCMA, that has reviewed and approved the restraint.

2. Seismic restraint manufacturer shall be responsible for the structural design of attachment hardware as required to attach snubbers/restraints to both the equipment and supporting structure on vibration isolated equipment, or to directly attach equipment to the building structure for non-isolated equipment.

3. The Contractor shall furnish to the seismic restraint manufacturer, a complete set of approved shop drawings of all equipment which is to be restrained, from which the selection and design of seismic restraint devices and/or attachment hardware will be completed.

a. The shop drawings furnished shall include, at a minimum, basic equipment layout, length and width dimensions, and installed operating weights of the equipment to be restrained.

4. All conduit, busway and cable trays piping and ductwork shall meet the requirement of NYCEC.

a. At a minimum, the seismic restraint manufacturer shall provide documentation on maximum restraint spacing for various restraint sizes and anchors, as well as ‘worst case’ reaction loads for each restraint and/or anchor size.

5. The Contractor shall ensure that all housekeeping pads are adequately reinforced and are properly dowelled to the building structure, so as to withstand calculated seismic forces.

a. In addition, the size of the housekeeping pad shall be coordinated with the seismic restraint manufacturer to ensure that adequate edge distances exist in order to obtain desired equipment anchor capacities.

1.06 QUALITY ASSURANCE

A. The V&SC manufacturer shall be the manufacturer of all the major components of V&SC devices and assemblies.

B. The manufacturer of the V&SCs shall have produced V&SCs for a minimum period for the last fifteen (15) years.

1. The Contractor shall provide list of at least five (5) installations with similar equipment, to that which will provided under this contract, and demonstrating compliance with these requirements.

2. The Contractor will provide the name, address, telephone number and email of the Company representative who can speak to enquires in the relation to the procurement, installation, commissioning and operation of the equipment at the above listed five installations.

C. V&SCs shall comply with and be installed in accordance with NYCBC 1613.

D. V&SC devices shall have the manufacturers name, part number and material heat code stamped in the devices itself.

E. Independent testing agencies for V&SCs shall have 15 or more years conducting tests on V&SCs.

F. Calculations in relation V&SCs shall be made by a Registered Professional Engineer in New York State and who is has 5 or more years experience in providing vibration and seismic control calculations.

G. V&SC manufacturer shall be responsible for the selection of the attachment hardware as required to attach V&SC devices to both the equipment and supporting structure.

H. The requirements for V&SC in this Section are in addition to other requirements as specified elsewhere in the equipment Sections for the support and attachment of equipment and electrical services, and for the isolation of same equipment.

I. Nothing on the Contract drawings or specifications shall be interpreted as justification to waive the requirements of this Section.

J. The Contractor shall furnish to the V&SC manufacturer a complete set of approved shop drawings of all equipment to which V&SCs are to be provided.

1. From these drawings the selection and design of devices and/or attachment hardware will be completed.

2. The shop drawings furnished shall include, at a minimum, basic equipment layout, length and width dimensions, and installed operating weights of the equipment to which control systems or devices are to be applied.

K. Contractor shall coordinate with the V&SC manufacture the size of all housekeeping pads supporting equipment.

L. Contractor shall coordinate with V&SC manufacturer, equipment manufacturer and structural engineer to locate and size structural supports underneath equipment.

1.07 SUBMITTALS

A. Contractor shall submit shop drawings and material specifications for the approval of the Engineer.

B. Submittals shall include, but not be limited to, the following:

1. Catalog cuts on all V&SC devices detailing compliance with this Section.

2. Detailed schedules of flexible and rigidly mounted equipment.

3. Fabrication details for all equipment bases including dimensions, structural member sizes and support point locations.

4. All details of suspension and support for ceiling hung equipment.

5. Restraint and anchorage calculations for all V&SC devices.

6. Certified copy of the manufacturer's Design Tests made in accordance with and conducted on V&SC devices and type that is being offered for this Contract.
7. Certified dimensioned outline drawings showing equipment layouts, front view and floor plan in sufficient detail to define space required for dismantling and maintenance, exact location of and space available, and the interrelationship of the various components.
8. Cross sections and details, as required, to satisfy the Engineer, that all components conform to specification requirements, including design and physical arrangement.
9. All information required by the Engineer for the design and location of all connecting structural, mechanical, or electrical items such as piping, ducts, cables, conduit, etc.
10. Weight of the equipment and distribution on the foundation support of the static, impact, seismic, wind, and other loads.
11. Erection drawings.
12. Complete Bill of Material.
13. Details of special features.
14. Nameplate schedules.
15. Recommended incidental parts list with pricing.
16. List of Special Tools.
17. Painting Procedures.
18. List of recommended lubricants.
19. Preliminary Operation and Maintenance manuals.
20. Finalized Operation and Maintenance manuals.
21. Certificates of Compliance/Manufacture.
    a. Provide letter signed in the presence of a notary attesting that the manufacturer satisfies qualifications stated in this Section.
22. Reports.
    a. All shop test and field test reports.
    b. All manufacturer's Site visit reports.

1.08 DELIVERY, STORAGE, AND HANDLING

A. V&SC devices and systems shall be delivered, stored, protected and handled in accordance with the manufacturer's instructions, this Section and the Specifications.

B. The Contractor shall inspect and report concealed damage to carrier within the specified time.

C. V&SC devices and systems shall be shipped and delivered in convenient shipping packages.

1. Each package shall be mounted on shipping skids and wrapped for protection.
2. Shipping package shall contain accessories to permit handling by cranes.

D. Contractor shall store the V&SC devices and systems and associated equipment in accordance with manufacturer's recommendations.

1. Store all equipment in clean, dry space.
2. Maintain factory protective wrappings or cover with heavy canvas or plastic to keep out dirt, water and construction debris.
3. Within 24 hours of receiving the V&SCs the Contractor shall install temporary heaters to prevent condensation during storage.

1.09 INCIDENTAL PARTS, SPECIAL TOOLS, AND SUPPLIES

A. The Contractor shall furnish all incidental parts, special tools and supplies in conformance this Section and the Specifications.

B. Deliver all incidental parts, tools and supplies with the V&SCs and associated equipment, neatly wrapped or boxed, indexed and tagged with complete information for use and reordering.

C. Furnish all incidental parts as recommended by the manufacturer.

D. Furnish the following tools:

1. Two (2) sets of specialized wrenches and tools as required for proper installation, operation and maintenance.

1.10 SPECIAL WARRANTY PROVISIONS / GUARANTEE PERIODS

A. Not Used.

PART 2 - PRODUCTS

2.01 MANUFACTURERS

A. Vibration and Seismic Control Devices shall be as manufactured by:

1. Korfund Dynamics
2. Mason Industries
3. California Dynamics Corporation
4. Or approved equal.

2.02 MATERIALS / EQUIPMENT

A. Vibration Control Devices(VCDs)

1. Type 1 (Elastomeric/ Fiber Glass Pads)
   a. Elastomeric isolators shall be pads or molded configuration.
   b. Pads shall be used in single and multiple layers.
      1) Multiple layer pads shall comprise a bonded, galvanized sheet metal separation plate between each layer.
      2) A load distribution plate shall be required to evenly distribute the load over the surface of the pad.
2. Type 2 (Elastomeric Mounts)

a. Elastomeric Isolator Mounts shall be molded from oil, ozone and oxidant resistant compounds, designed to operate within the strain limits of the material.

b. Isolators shall include encapsulated load transfer plate for bolting to equipment and a base plate with anchor holes for bolting to the supporting structure.

3. Type 3 (Steel Spring Isolators)

   a. Steel Spring Isolators shall be a freestanding and laterally stable spring assembly without a housing.

   b. Isolators shall comprise a leveling device rigidly connected to the equipment or frame above.

4. Type 4 (Restrained Spring Isolators)

   a. Spring Isolator shall be equipped with a restrained steel housing to prevent the equipment's operating height from changing should it be necessary to temporarily remove a portion of its weight.

      1) The housing shall also function as rigid blocking during rigging so that the installed height and the operating height of the isolated equipment remains the same.

      2) The isolator top shall have adequate means for fastening to the equipment, and baseplate shall have adequate means for fastening to the supporting structure, when the equipment is subject to wind loading.

5. Type H1 (Elastomeric Hanger)

   a. Elastomeric Hangers shall comprise an elastomeric isolation element contained in a steel hanger housing.

   b. The elastomeric element/hanger shall be shaped to prevent the rod from contacting the housing and thereby short-circuiting the isolation.

   c. A steel load-distribution plate shall be incorporated/furnished sandwiching the elastomeric element to the hanger housing.

6. Type H2 (Spring Hanger)

   a. Spring Hangers shall comprise a stable steel spring contained in a steel hanger housing with an integral elastomeric element to prevent metal to metal contact.

   b. The bottom hole must be large enough to allow a +/- 15 degree (30 degree total) rod misalignment.

7. Type H3 (Combination Elastomeric/Spring Hanger)

   a. Combination Elastomeric/Spring Hanger shall comprise a stable steel spring contained in a steel hanger housing.

   b. An elastomeric element shall be added in series to isolate the upper connection of the hanger box to the structure.

   c. The bottom hole must be large enough to allow a +/- 15 degree (30 degree total) rod misalignment.

8. Support Bases with VCDs

   a. Type B (Structural Bases)

1) Structural Bases with integral isolators shall be engineered steel frames manufactured from structural steel shapes with welded height-saving brackets as required for side mounting of the isolators.
2) Frames may be square, rectangular or T-shaped.
3) Adjustable motor slide bases shall be included when required for centrifugal fan applications.

b. Type C (Concrete Inertia Bases)

1) Concrete Inertial Bases shall be engineered steel forms with integrated isolator brackets.
2) Bases shall be shipped ready to be filled with concrete on Site by the Contractor.
3) Bases shall include welded or tied reinforcing bars running both ways in a single layer.
4) The bases shall include a template and fastening devices for the equipment for which it will be mated.
5) Weight of concrete and frame shall not be less than the weight of the equipment it supports.
6) Inertia bases shall be at least six inches in depth.
7) Inertia bases shall be sized to accommodate the elbow support(s).
8) Adjustable motor slide bases shall be included when required for centrifugal fan applications.

c. Type D-1 (Curb Isolation Rails)

1) Vibration isolation curb elements shall be inserted between rooftop equipment and existing roof curbs.
2) Elements shall be of aluminum or steel construction and shall be attached to the equipment as specified by the curb isolation manufacturer.
3) Incorporated vibration isolators shall meet the specific characteristics described in this Section.
4) Elements exposed to the weather shall be galvanized or manufactured out of corrosion resistant materials.
5) Contractor shall be responsible for proper attachment of curb isolation elements to curbs.
6) Contractor shall be responsible for verifying the adequacy of the existing curb and its anchorage to the roof structure.

d. Type D-2 (Vibration Isolated Roof Curbs)

1) Curbs used to attach rooftop equipment to the structure shall be of aluminum or steel construction and shall be attached to the equipment as specified by the curb manufacturer.
2) Incorporated vibration isolators shall meet the specific characteristics described in this Section.

3) Elements exposed to the weather shall be galvanized or manufactured out of corrosion resistant materials.

4) Contractor shall be responsible for proper attachment of rooftop curb to building structure.

5) Contractor shall be responsible for coordinating the location of adequate structural support for the rooftop curb.

B. Seismic Control Devices (SCDs)

1. Type A (Coil Spring Isolator Incorporated Within a Cast Iron or Cast Aluminum Housing)

   a. Cast iron or aluminum housings shall be made of ductile forms of the material designed for and rated in seismic restraint applications.

2. Type B, C and D (Coil Spring Isolator Incorporated Within a Steel Housing)

   a. Spring isolators shall be seismically restrained, incorporating single or multiple coil spring elements, having all of the characteristics of free standing coil spring isolators as specified in the vibration isolation portion of this Section.

   b. Springs shall be restrained using a housing, without significantly degrading the vibration isolation capabilities of the spring during normal equipment operating conditions.

   c. Vibration isolators shall incorporate a steel housing and resilient snubbing grommet system designed with clearances of no more than 0.25” (6 mm) in any direction and to prevent any direct metal-to-metal contact between the supported member and the fixed restraint housing.

      1) In addition to the primary isolation coil spring, the isolator will include a resilient pad in series with the spring(s).

   d. Spring elements shall be color coded or otherwise easily identified.

   e. Springs shall have a lateral stiffness greater than 0.8 times the rated vertical stiffness and shall be selected to provide a 50% overload capacity.

   f. All springs shall be provided with a finish suitable for the application.

3. Type E (All-Directional Elastomeric Isolator)

   a. Vibration Isolators shall be elastomeric, molded from oil, ozone and oxidant resistant compounds, designed to operate within the strain limits of the isolator to provide the maximum isolation and longest life expectancy possible.

   b. Isolators shall include an encapsulated load transfer plate for bolting to equipment and a base plate with anchor holes for bolting to the supporting structure.

   c. Cast iron or aluminum housings shall be made of ductile forms of the material designed for and rated in seismic restraint applications.

   d. Isolator shall have minimum operating static deflections as detailed in this Section or as shown on the Contract Drawings and shall not exceed published load capacities.

4. Type F (All-Directional External Seismic Snubber Assembly).

a. Equipment shall be restrained against excessive movement during a seismic event by the use of all-directional resilient snubbers, designed to withstand the project-required seismic forces.

b. A minimum of three (3) snubbers shall be used for each equipment installation, oriented to properly restrain the isolated equipment in all directions.

c. Snubbers shall be of interlocking steel construction and shall be attached to the building structure and equipment in a manner consistent with anticipated design loads.

d. Snubbers shall limit equipment movement at each snubber location to a maximum of 0.25” (6 mm) in any direction.

e. Snubbers shall include a minimum 0.25” (6 mm) thick resilient pad to cushion any impact and to avoid any potential for metal-to-metal contact.

f. Snubbers shall be installed without significantly degrading the vibration isolation capabilities of the isolator during normal equipment operating conditions.

5. Type G (Lateral External Seismic Snubber Assembly)

a. Stable equipment (where uplift forces are zero or are addressed by other restraints) shall be restrained against excessive lateral movement during a seismic event by the use of lateral resilient snubbers, designed to withstand the expected seismic forces.

b. A minimum of three (3) snubbers shall be used at each equipment installation, oriented to effectively restrain the isolated equipment in all lateral directions.

c. Snubbers shall be of steel construction and shall be attached to the building structure and equipment in a manner consistent with anticipated design loads.

d. Snubbers shall limit equipment movement at each snubber location to a maximum of 0.25” (6 mm) in any direction.

e. Snubbers shall include a minimum 0.25” (6 mm) thick resilient pad to cushion any impact and to avoid any potential for metal-to-metal contact.

f. Snubbers shall be installed without significantly degrading the vibration isolation capabilities of the isolator during normal equipment operating conditions.

6. Type H (Omni-Directional External Seismic Snubber Assembly)

a. Equipment shall be restrained by the use of omni-directional resilient snubbers, designed to withstand the expected seismic forces.

b. A minimum of four (4) snubbers shall be used at each equipment installation, oriented to effectively restrain the isolated equipment in all lateral directions.

c. Snubbers shall be of steel construction and shall be attached to the building structure and equipment in a manner consistent with anticipated design loads. Snubber clearances shall be limited to a maximum of 0.25” (6 mm) in any direction.

d. Snubbers shall include resilient pads with a minimum thickness of 0.25” (6 mm) to cushion any impact and to avoid any potential for metal-to-metal contact.

e. Snubber shall be installed without significantly degrading the vibration isolation capabilities of the isolator during normal equipment operating conditions.

7. Type I: Horizontal Single-Axis External Seismic Snubber Assembly
    a. Stable equipment (where uplift forces are zero or are addressed by other restraints) shall be restrained against excessive lateral movement during a seismic event by the use of horizontal single-axis resilient snubbers designed to withstand the expected seismic forces.
    b. A minimum of four (4) snubbers are to be used at each equipment installation, oriented to effectively restrain the isolated equipment in all lateral directions.
    c. Snubbers shall be of steel construction and shall be attached to the building structure and equipment in a manner consistent with anticipated design loads.
    d. Snubber clearances shall be limited to a maximum of 0.25” (6 mm) in any direction.
    e. Snubbers shall include resilient pads with a minimum thickness of 0.25” (6 mm) to cushion any impact and to avoid any potential for metal-to-metal contact.
    f. Snubbers shall be installed without significantly degrading the vibration isolation capabilities of the isolator during normal equipment operating conditions.
8. Type J (Cable Restraints for Suspended Components and Systems)
    a. Seismic wire rope cable restraints shall consist of steel wire strand cables, sized to resist expected seismic loads and to restrain suspended components and systems in all lateral directions.
    b. Protective thimbles shall be used to eliminate potential for dynamic cable wear and strand breakage, if required.
    c. Restraint system shall be sized to the capacity of the cable or to the capacity of the anchorage, whichever is less.
    d. Anchor load is to be calculated taking into account the geometry of the bracket.
    e. Seismic wire rope connections shall be made using overlapping wire rope “U” clips, cable clamping bolts, swaged sleeves or seismically rated tool-less wedge insert lock connectors.
    f. Vertical suspension rods shall be braced as required to avoid potential for buckling due to vertical compression forces.
    g. Braces shall be selected to be of sufficient strength to prevent support rod buckling.
        1) Braces shall be attached to the vertical suspension rod by a series of attachment clips.
    h. Where clevis hanger brackets are used for seismic restraint attachment, the cross bolt shall be fitted with internal bracing to prevent deformation of the clevis hanger.
9. Type K (Rigid Restraints for Suspended Components and Systems.)
    a. Rigid restraints shall consist of structural elements, sized to resist expected seismic loads and to restrain suspended components and systems in all lateral directions.
    b. Structural element shall be capable of carrying both compressive and tensile loading.
    c. Restraint system shall be sized to the capacity of the cable, or to the capacity of the anchorage, whichever is less.

d. Anchor load shall be calculated taking into account the geometry of the bracket.

e. Anchorage of static support system shall be capable of carrying the additional tension loads generated by the compression of the rigid brace.

   1) This is the vertical component of the compressive force in the brace.

   2) This load is additive to any static load requirements on the system.

f. Vertical suspension rods shall be braced as required to avoid potential for buckling due to vertical compression forces.

g. Braces shall be selected to be of sufficient strength to prevent support rod buckling.

   1) Brace shall be attached to the vertical suspension rod by a series of attachment clips.

h. Where clevis hanger brackets are used for seismic restraint attachment, the cross bolt shall be fitted with internal bracing to prevent deformation of the clevis hanger.

10. Type L (Roof Curbs (Non-Isolated))

    a. Curbs or fabricated equipment piers used to attach rooftop equipment to the structure shall be of steel construction and shall be attached to the equipment as specified by the manufacturer.

    b. Contractor shall be responsible for proper seismic attachment of rooftop curb to building structure.

    c. Contractor shall be responsible for coordinating the location of adequate structural support for the rooftop curb.

    d. Components exposed to the weather shall be galvanized or manufactured out of corrosion resistant materials.

11. Type M (Roof Curbs (Isolated))

    a. Curbs or fabricated equipment piers used to attach rooftop equipment to the structure shall be of steel construction and shall be attached to the equipment as specified by the manufacturer.

    b. Contractor shall be responsible for proper seismic attachment of rooftop curb to building structure.

    c. Contractor shall be responsible for coordinating the location of adequate structural support for the rooftop curb.

    d. Curbs or piers shall be fitted with snubbers capable of resisting all anticipated design load conditions.

    e. Snubber clearances in all planes shall be limited to a maximum of 0.25” (6 mm) in any direction.

    f. Snubbers shall include a minimum 0.25” (6 mm) thick resilient pad to cushion any impact and to avoid any potential for metal-to-metal contact.

    g. Snubber shall be installed without significantly degrading the vibration isolation capabilities of the isolator during normal equipment operating conditions.

    h. Components exposed to the weather shall be galvanized or manufactured out of corrosion resistant materials.

2.03 FABRICATION / ASSEMBLING / FINISHES

A. Painting

1. Painting shall be in accordance with Section 09 91 90 – Painting.
2. All internal and external metal surfaces of the V&SC devices shall be thoroughly cleaned, rinsed and phosphatized prior to painting.
3. All steel components shall be cleaned of welding slag and coated with an approved primer.
4. All steel components (excluding springs) on projects exposed to the weather, shall be hot dip galvanized or powder coated.
5. Springs shall be cadmium or zinc plated, powder-coated, epoxy or PVC finished.
6. The V&SC devices shall be painted with a thermosetting electrostatically applied polyester powder with final baked on average thickness between 1.5 to 2.0 mils.
7. The color of all interior finishing coats shall be the manufacturer's standard.
8. The color of the exterior finishing coats shall be the manufacturer's standard.
9. The finish shall have a minimum pencil hardness of 2H as tested per ASTM D3363 and shall pass ASTM B117 5% salt spray test for a minimum of 1000 hours.
10. A supply of touch-up paint shall be provided from paint used for the final coat.

2.04 SOURCE QUALITY CONTROL / SHOP TESTS

A. Not Used

PART 3 - EXECUTION

3.01 EXAMINATION / PREPARATION

A. Examine areas and equipment to receive V&SC devices and building expansion/seismic joint for compliance with requirements for installation tolerances and other conditions affecting performance.

B. Examine rough-in of reinforcement and cast-in-place anchors to verify actual locations before installation.

C. Proceed with installation only after unsatisfactory conditions have been corrected and approved by of the Engineer.

3.02 INSTALLATION

A. Vibration Control Devices (VCD)

1. VCDs shall be installed in accordance with the manufacturer's instructions and recommendations.
2. VCDs shall not be installed in a manner that will result in equipment stress or misalignment.
3. Isolated equipment or components shall not be installed in manner that makes rigid connections with the building structure unless isolation is not specified
   a. Building structure includes, but is not limited to slabs, beams, columns, studs and walls.

   b. Coordinate Work with other trades to avoid rigid contact with the building structure.

4. Upon completion of installation of all equipment and VCDs and before adjusting the VCDs, all debris shall be cleaned from beneath the isolated equipment, to avoid the possibility of short-circuiting the isolation system.
5. The Contractor shall notify the local representative of the vibration isolation manufacturer prior to installing any vibration isolation devices. The Contractor shall seek the representative's guidance in any installation procedures with which Contractor is unfamiliar.

B. Seismic Control Devices (SCD)

1. SCDs shall be installed as per the manufacturer's written instructions.
2. SCDs shall not be installed in a manner that will result in equipment stress or misalignment.
3. Isolated equipment or components shall not be installed in manner that makes rigid connections with the building structure unless isolation is not specified
   a. Building structure includes, but is not limited to slabs, beams, columns, studs and walls.
   b. Coordinate Work with other trades to avoid rigid contact with the building structure.
4. Upon completion of installation of all SCDs and before start up of restrained equipment, all debris shall be cleaned from beneath all protected equipment, leaving equipment free to contact snubbers.
5. All external utility connections to restrained equipment shall be designed to allow differential seismic motion without damage to the equipment or utility connections.
6. Adjust isolators and restraints after systems have been filled and equipment is at its operating weight, following manufacturer's written instructions.
7. After equipment installation is completed, adjust limit stops following manufacturer's written instructions so they are out of contact during normal operation.
8. Adjust snubbers according to manufacturer's written instructions.
9. Torque anchor bolts according to anchor manufacturer's written instructions to resist seismic forces.
10. V&SCS equipment shall be installed in accordance with manufacturer's instructions and recommendations.
11. V&SCS equipment shall be installed so that sufficient access and working space is provided for ready and safe operation and maintenance.
12. V&SCS equipment shall be installed on concrete pads at locations shown on the Contract Drawings.
13. Steel channels shall be provided for support of V&SCS equipment.
14. V&SCS equipment shall be securely mounted to mounting surface with anchor bolts.
15. Anchor V&SCS to satisfy the specified seismic requirements in accordance with the anchorage details.
16. Install nameplates for identification of V&SCS equipment.

3.03 FIELD TESTING / QUALITY CONTROL

A. Field Tests

1. After installation, V&SCS shall be field tested for operation and conformance.
2. The Contractor shall perform field tests in accordance with this Section and Specifications.
3. The field tests shall be witnessed by the Engineer and certified by the Contractor.
4. V&SCS testing shall be performed by the manufacturer's representative, prior to energizing equipment.
5. Equipment shall not be energized without the permission of the Engineer.
6. The testing shall be in accordance with the recommendations of the manufacturer's representative and an engineer.

B. Upon completion of the installation of all vibration isolation devices herein specified, the local representative of the vibration isolation manufacturer shall, at the contractor's request, inspect the completed system and report in writing any installation errors or other fault in the system which could affect the performance of the system.

C. The installing contractor shall submit a report upon request to the building and/or engineer, including the manufacturer's representative's final report, indicating that all vibration isolation material has been properly installed, or steps that are to be taken by the contractor to properly complete the vibration isolation Work as per the Specifications.

D. Manufacturer's Field Services

1. The Contractor shall provide the services of a qualified manufacturer's service representative who shall adequately supervise and assist in the installation of the V&SCS, check the V&SCS installation before it is placed into operation, assist in the performance of field tests, observe and assist initial operations and train the Contractor and the City's operations and maintenance staff in the care, operation and maintenance of the V&SCS.
2. The Contractor shall provide V&SCS equipment start-up services and training in accordance with this Section, the Specifications and the Contract Drawings and the following requirements:
3. Minimum number of manufacturer's representative site visits per V&SCS:

Construction Phase	No of Visits	Person-Days	No of Day per Visit
Installation	2	1	1
Field Tests	2	1	1
Acceptance Testing	2	1	1
Training	2	1	1

4. Any additional time required to achieve a successful installation shall be at the expense of the Contractor.
5. The Engineer shall have the right to reallocate any unused person-days.
6. The Contractor shall provide a field report from the manufacturer's representative for each visit to the Site.

a. The report shall include complete information on time, schedule, tasks performed, persons contacted, problems corrected, tests results, training, instruction and all other pertinent information.

7. The service representative shall sign in and out with the Engineer on each day they are at the Site.

   a. Person-days shall be understood to be the actual time spent at the Site and does not include travel to and from the Site.

3.04 STARTUP / DEMONSTRATION

A. The Contractor shall provide V&SCS start-up services and Training in accordance with this Section and the Specifications.

1. Acceptance Testing
2. The Contractor shall provide acceptance testing of the V&SCS.
3. All acceptance testing shall be performed by the testing firm, after the completion of the field tests specified under this Section.
4. The acceptance testing shall be witnessed by the Engineer and certified by the Contractor.
5. Acceptance testing inspection shall be performed on each V&SCS. Inspection shall include the following:

   a. Physical, electrical and mechanical condition shall be inspected.

   c. Proper anchorage, required area clearances, physical damage and proper alignment shall be checked.

   d. Ventilating air passageways shall be inspected for blockage.

   e. All connections shall be inspected for high resistance.

   f. Electrical and mechanical interlock systems shall be checked for proper operation.

   g. Insulators shall be inspected for evidence of damage or contamination.

   h. Equipment shall be cleaned and lubricated as required.

6. Acceptance electrical testing shall be performed on each V&SCS. Testing shall include the following:

   a. Ground-resistance tests shall be performed.

   b. Insulation-resistance tests shall be performed on each bus section, on each switch, transformer and circuit breaker, phase-to-phase and phase-to-ground.

   c. An over potential test shall be performed on each bus section, each phase-to-ground and on each switch in the closed position. Test each pole with other poles grounded.

   d. Contact-resistance test shall be performed.

   e. Control and metering wiring performance test shall be performed.

   f. Circuit breaker trip characteristics shall be determined by primary current injection.

   g. All tests and values shall be in accordance with the manufacturer's recommendations and NETA ATS.

h. The Contractor shall provide an acceptance testing report. The report shall be in accordance with NETA ATS.

3.05 ADJUSTING / PROTECTION / CLEANUP

A. Upon completion of the installation of all vibration isolation devices herein specified, the local representative of the vibration isolation manufacturer shall, at the Contractor's request, inspect the completed system and report in writing any installation errors or other fault in the system which could affect the performance of the system.

B. The Contractor shall submit a report upon request to the Engineer, including the manufacturer's representative's final report, indicating that all vibration isolation material has been properly installed, or steps that are to be taken by the Contractor to properly complete the vibration isolation Work as per the Specifications.

Appendix

Schedule of Vibration Control Devices

Vibration Isolation Type	Product Description	Product Manufacturer	VISCMA Member Model(s)
1	Elastomeric / Fiberglass Pads	CalDyn/California Dynamics	RP ECPR VT FP EP
		Mason Industries, Inc.	W/SUPER W
		Vibration Eliminator Co., Inc.	100N/200N/400N (NP)
		The VMC Group	MAXIFLEX/NRC/ SHEARFLEX/NR FABRIFLEX/NDB
2	Elastomeric Mounts	CalDyn/California Dynamics	RM-D JQTQN
		Mason Industries, Inc.	BRA/BRB/BRC/BRD RAA, RBA, RCA, RDA
		Vibration Eliminator Co., Inc.	T44/D44/T54/3865 (TD)
		The VMC Group	RSM/RDC/MB R/RD/RVD
3	Steel Spring Isolators	CalDyn/California Dynamics	SSL SSK
		Mason Industries, Inc.	SLF
		Vibration Eliminator Co., Inc.	OST
		The VMC Group	A-SERIES/SW/AW
		Mason Industries, Inc.	SLR/SLRS
		Vibration Eliminator Co., Inc.	KW
		Vibro-Acoustics	CSR/SCSR/SFS
		The VMC Group	MS/MSS/AWRS/M SWSR/AMSR/AEQM/ ASCM
H1	Elastomeric Hangers	CalDyn/California Dynamics	RH RH-D
		Mason Industries, Inc.	HD/CRCH
		Vibration Eliminator Co., Inc.	1C/3C/3CTD
		The VMC Group	HR/RH/BRD/HRD
H2	Spring Hangers	CalDyn/California Dynamics	CH/30
		Mason Industries, Inc.	30/CSCH
		Vibration Eliminator Co., Inc.	SNC
		The VMC Group	HSA SH/BSA
H3	Combined Elastomeric/Spring Hangers	CalDyn/California Dynamics	HH/30
		Mason Industries, Inc.	30N
		Vibration Eliminator Co., Inc.	SNRC
		The VMC Group	HRSA RSH-30A/BSRA

Schedule of Vibration Control Devices (continued)

Equipment Support Base Type	Product Description	Product Manufacturer	VISCMA Member Model(s)
B	Structural Bases	CalDyn/California Dynamics	WW SW XW
		Mason Industries, Inc.	MSL/WFSL
		Vibration Eliminator Co., Inc.	UN-OST/UN-KW
		The VMC Group	SFB/WFB/WX/WSB
C	Concrete Inertia Bases	CalDyn/California Dynamics	CW
		Mason Industries, Inc.	BMK/KSL
		Vibration Eliminator Co., Inc.	OST/KW Frames
		The VMC Group	MPF/CPF/WPF
D-1	Curb Isolation Rails	CalDyn/California Dynamics	JQ
		Mason Industries, Inc.	CMAB
		Vibration Eliminator Co., Inc.	'AR' Bases
		The VMC Group	RTIR
D-2	Roof Curbs (Isolated)	CalDyn/California Dynamics	MW YW
		Mason Industries, Inc.	RSC/ISC
		Vibration Eliminator Co., Inc.	VERC
		The VMC Group	P-6100/P-6200/P-6300 P-7100/P-7200/P-7300

Schedule of Seismic Control Devices

Seismic Snubber Type	Seismic Product Description	Product Manufacturer	VISCMA Member Model(s)
A	Coil Spring Isolator Incorporated Within A Ductile Iron Or Cast Aluminum Housing	CalDyn/California Dynamics	RJ, TJ
		Mason Industries, Inc.	SSLFH
		Vibration Eliminator Co., Inc.	OSTSM
		The VMC Group	AEQM
B	Coil Spring Isolator Incorporated Within a Steel Housing	CalDyn/California Dynamics	JQ, DL
		Mason Industries, Inc.	SLR
		Vibration Eliminator Co., Inc.	KWSR
		The VMC Group	ASCM
C	Coil Spring Isolator Incorporated Within A Steel Housing	CalDyn/California Dynamics	JQ, DL
		Mason Industries, Inc.	SLRS
		Vibration Eliminator Co., Inc.	KWSR
		The VMC Group	CTER, AWRS, AWMR
D	Coil Spring Isolator Incorporated With Integral Seismic Restraint	CalDyn/California Dynamics	JQ, DL
		Mason Industries, Inc.	SLRS
		Vibration Eliminator Co., Inc.	OSTSM
		The VMC Group	SWSR
E	All Direction Elastomeric Isolator	CalDyn/California Dynamics	TYPE JQ-TQN
		Mason Industries, Inc.	RBA, RCA, BRA, BRB,
		Vibration Eliminator Co., Inc.	368SRS, 368SRD, SM
		The VMC Group	RSM, MB, SRVD, RDC
F	All Direction 3-Axis External Seismic Snubber Assembly	CalDyn/California Dynamics	RL-A, RL-C
		Mason Industries, Inc.	Z-1225
		Vibration Eliminator Co., Inc.	ADR
		The VMC Group	ERX, SR
G	Lateral 2-Axis External Seismic Snubber Assembly	CalDyn/California Dynamics	RL-A, RL-C
		Mason Industries, Inc.	
		Vibration Eliminator Co., Inc.	ADR
		The VMC Group.	
H	Omni-Directional 3-Axis External Seismic Snubber Assembly	CalDyn/California Dynamics	RL-A, RL-C
		Mason Industries, Inc.	Z-1011
		Vibration Eliminator Co., Inc.	
		Vibro-Acoustics	
		The VMC Group	ER

Schedule of Seismic Control Devices (continued)

Seismic Snubber Type	Seismic Product Description	Product Manufacturer	VISCMA Member Model(s)
I	Horizontal 1-Axis External Seismic Snubber Assembly	CalDyn/California Dynamics	RL-A, RL-C
		Mason Industries, Inc.	
		Vibration Eliminator Co., Inc.	HCS
		The VMC Group	SR
J	Cable Restraints For Suspended Components and Systems	CalDyn/California Dynamics	
		Mason Industries, Inc.	SCB
		Vibration Eliminator Co., Inc.	SC
		The VMC Group	SCR, SB, LRC
K	Rigid Restraints For Suspended Components and Systems	CalDyn/California Dynamics	
		Mason Industries, Inc.	SSB
		Vibration Eliminator Co., Inc.	
		The VMC Group	SAB
L	Roof Curbs (Non-Isolated)	CalDyn/California Dynamics	N/A
		Mason Industries, Inc.	RRC
		Vibration Eliminator Co., Inc.	VERSC, SQRC
		The VMC Group	P6000
M	Roof Curbs (Isolated)	CalDyn/California Dynamics	MW, YW
		Mason Industries, Inc.	RSC
		Vibration Eliminator Co., Inc.	VERC
		The VMC Group	R6200, R6300, RTIC

End of Section

No Text On This Page

SECTION 26 05 73 – POWER SYSTEM STUDIES – IG/PC

PART 1 GENERAL

1.01 SUMMARY

A. Requirements for providing Power System Studies and field testing. The Contractor shall provide Power System Studies and field testing in accordance with the requirements specified under this Section, the Specifications and the Contract Drawings.

B. The Power System Studies shall include a load flow study, a short circuit study, a protective device evaluation study and a protective device coordination study for a completely coordinated power distribution system. Power System studies shall include other studies as applicable including but not limited to motor starting and harmonic studies.

1.02 PAYMENT

A. There is no separate payment provision for this Section.

1.03 RELATED SECTIONS

A. Section 26 05 11 - General Electrical Requirements.

B. Section 26 05 53 - Identification for Electrical Systems.

C. Section 26 05 75 - Shock Hazard and Arc Flash Studies.

D. Section 26 08 11 - General Electrical Testing.

1.04 REFERENCES

A. Definitions

1. Power System as used in this Section shall mean all of the electrical distribution network from the Utility connection to all loads. This includes all on site generating sources, all branches and all nodes.
2. Low-Voltage as used in this Section and the Specifications shall mean all equipment, conductors, insulation systems and accessories intended for operation at less than 1000 volts and within the 600 V Class.
3. Node as used in this Section shall mean any point in the Power System where two or more pieces of electrical equipment connect.
4. Branch as used in this Section shall mean any element of the Power System connecting any two nodes.
5. Major Node as used in this Section shall mean any node representing actual real world connection points of branches of the Power System such as busses in switchgears, MCCs or panelboards or the connection points of cables to load and equipment.
6. Dummy Node as used in this Section shall mean any fictitious node created within the modelling software to facilitate modelling of the Power System.
7. Major Branch as used in this Section shall mean any branch representing actual real world elements of the Power System such as feeders, breakers, transformers, and cables.
8. Dummy Branch as used in this Section shall mean any fictitious branches created within the modelling software to facilitate modelling of the Power System.

9. All references to the Electric Utility or Utility shall mean the Local Electric Utility having jurisdiction as defined in this Section.
10. The Electric Utility is Con Edison.
11. Harmonic Sources as used in this Section shall mean
    a. All equipment drawing non-linear currents and causing the voltage and currents at the node to which they are connected and other nodes to exhibit non-linear voltage and current characteristics. Equipment includes:
        1) Convertors in variable frequency drives and switch mode power supplies.
        2) Semiconductor switches modulating the voltage in soft starters, light dimmers and electronic ballast.
    b. Utility sources whose waveforms are distorted dues to non-linear loads at other consumers on the Utility network.
12. Point of Common Coupling (PCC) is the node where the Power System is connected to the Utility.
    a. Subordinate PCCs may be also defined at the nodes within the Power System where the equivalent network of the Utility and the Power System and specific harmonic sources are connected.
    b. PCCs are shown on the Contract Drawings.

B. Reference Standards

1. NYCEC - New York City Electrical Code.
2. IEEE C37.04 - IEEE Standard Rating Structure for AC High Voltage Circuits Rated on a Symmetrical Basis
3. IEEE C37.010 - IEEE Application Guide for AC High Voltage Circuit Breakers Rated on a Symmetrical Basis
4. IEEE C37.13 - IEEE Standard for Low-Voltage AC Power Circuit Breakers Used in Enclosures.
5. IEEE 141 - IEEE Recommended Practice for Electric Power Distribution in Industrial Plants
6. IEEE 399 - IEEE Recommended Practice for Industrial and Commercial Power System Analysis
7. IEEE 519 - IEEE Recommended Practice and Requirements for Harmonic Control in Electric Power Systems
8. IEEE 1015 - IEEE Recommended Practice for Applying Low-Voltage Breakers Used in Industrial and Commercial Power Systems
9. IEEE 3002.2 - IEEE Recommended Practice for Conducting Load-Flow Studies and Analysis of Industrial and Commercial Power Systems.
10. IEEE 3002.3 - IEEE Recommended Practice for Conducting Short-Circuit Studies and Analysis of Industrial and Commercial Power Systems.

11. IEEE 3002.7 - IEEE Recommended Practice for Conducting Motor-Starting Studies and Analysis of Industrial and Commercial Power Systems.
12. IEEE 3002.8 - IEEE Recommended Practice for Conducting Harmonic Studies and Analysis of Industrial and Commercial Power Systems.
13. NETA ATS - NETA Acceptance Testing Specification.

1.05 DESCRIPTION

A. Power Systems Studies shall be completed by modelling the entire low-voltage and medium-voltage equipment of the Power System in the software detailed in this Section. The studies shall encompass existing systems and the proposed systems.

B. The model shall comprise all major nodes and major branches of the Power System.

C. The model shall also comprise dummy nodes and dummy branches to attain a level of connectivity similar to the Single Line Diagram representation of the Power System.

D. The model shall completely facilitate the examination of normal operations, and alternate operations of the Power System which could result in deviations from the normal operating values at major nodes and in major branches of the Power System.

1.06 QUALITY ASSURANCE

A. Modelling:

1. The Power System studies shall be performed in accordance with the latest applicable provisions and recommendations of the Reference Standards in this Section.
2. The Contractor shall retain the services of a Professional Engineer, licensed in the State of New York, to perform the Power System Studies, and is referred to as the “Licensed Engineer” elsewhere in this section.
3. The Licensed Engineer performing modelling shall be from an independent consulting firm or the equipment manufacturer and shall have a minimum of 5 years of experience in performing Industrial Power System Studies.
4. It shall be the responsibility of the Contractor’s Licensed Engineer:
   a. To evaluate all devices.
   b. Evaluate all equipment.
   c. Determine all performance indices at the PCC.
   d. Establish the settings of all protection functions.
   e. Establish the settings required to secure selective coordination among protective devices.
5. Power System Studies shall be completed using the software program listed in this Section.
6. The Contractor shall coordinate with the Licensed Engineer performing the studies and assist the Engineer in the collection of all information necessary to complete the studies specified.
7. All test equipment and instrument calibration shall be in accordance with the latest edition of the accuracy standard of the NIST and NETA ATS.

B. Field Testing:

1. The Power System shall be field tested. The field testing shall be performed in accordance with the requirements specified under this Section.
2. The Contractor shall retain the service of an independent testing firm who shall perform field testing of the Power System. The testing firm shall have experience in the inspection and testing of the system equipment and shall be a member company of NETA. Provide proof of membership, or demonstrate that the standards and experience required for membership are possessed, all to the satisfaction of the Engineer

1.07 SUBMITTALS

A. Submittals

1. Contractor shall submit Shop Drawings and material specifications for the approval of the Engineer. Submittals shall include, but not be limited to:
   a. Experience of the Licensed Engineer who will perform the Power Systems Studies
   b. Version of the software to be used to conduct Power Systems Studies
   c. Calculations and results of the Power System Studies shall be submitted. The submission of calculation and results shall consist of:
      1) A report detailing all the findings, recommendations and settings arising from the studies. The report shall be stamped and signed by the Licensed Engineer.
      2) The complete software files produced by the study software, and corresponding to the findings, recommendations and settings contained in the report. Two copies of the software files shall be submitted, one copy shall be write protected and the other shall not.
2. The Power System Studies shall be submitted to the Engineer for approval prior to receiving the final approval of the Power System equipment and prior to the approval of equipment drawings for manufacturing.
3. In the event that formal completion of the Power System Studies may cause delay in the approval of equipment or Utility drawings then a preliminary submission of the Power System Studies shall be made. The Engineer will determine whether the preliminary submission is sufficient to allow approval of equipment and Utility drawings.
4. Work sequence for the field testing shall be submitted. The sequence shall indicate the schedule of work, time frame and downtime for the equipment. The work sequence shall be submitted at least 60 days in advance prior to conformation of field testing dates.
5. Qualifications of proposed testing firm to perform field testing shall be submitted. Submit firm experience records at least 60 days in advance to actual testing along with five recent references with phone numbers.

B. Reports

1. Field test report shall be submitted.

1.08 DELIVERY, STORAGE, AND HANDLING

A. Not Used

1.09 INCIDENTAL PARTS, SPECIAL TOOLS, AND SUPPLIES

A. Not Used

1.10 SPECIAL WARRANTY PROVISIONS / GUARANTEE PERIODS

A. Not Used

PART 2 PRODUCTS

2.01 MANUFACTURERS

A. Software

1. The only software program to conduct power system studies shall be:

a. DesignBase 6.0 (or version approved by Engineer) by Power Analytics Corporation.

2.02 MATERIALS / EQUIPMENT

A. Not Used

2.03 FABRICATION / ASSEMBLING / FINISHES

A. Load Flow Study:

1. The load flow study shall be preliminary to all the other studies and for all proposed operating conditions of the Power System. The load flow study shall be used to

a. Preset the study parameters as applicable for each of the studies listed under this Section.

b. Confirm the layout and balance of the power flows across the major branches

c. Establish the voltage profiles at all major nodes.

d. Identify real and reactive power flows into nodes and across the branches of the Power System.

e. Determine real and reactive power losses in the Power System.

f. Identify proposed transformer tap settings.

g. Problem areas or equipment capacity inadequacies shall be promptly brought to the Engineer's attention.

B. Short Circuit Study:

1. Short-circuit momentary duties and interrupting duties shall be calculated on the basis of maximum available fault current at each major node and through major branches and other significant locations through the system.

2. The short circuit tabulations shall include symmetrical fault currents, and X/R ratios.

3. For each fault location, the total duty on the major nodes, as well as the individual contribution from each connected branch, including motor back EMF current contributions shall be listed with its respective X/R ratio.

C. Protective Device Evaluation Study:

1. The protective device evaluation study shall be performed to determine the adequacy of circuit breakers, controllers, surge arresters, busways, switches, and fuses by

tabulating and comparing the short-circuit ratings of these devices with the prospective fault currents.

2. Appropriate multiplying factors based upon system X/R ratios and protective device rating standards shall be applied.

D. Protective Device Coordination Study:

1. The protective device coordination study shall be performed to select or to check the selections of the power fuse ratings, protective relay characteristics and settings, ratios and characteristics of associated voltage and current transformers, and low-voltage breaker trip characteristics and setting.
2. The device settings computed in the coordination study shall provide complete selectivity.
   a. The system shall be selectively coordinated such that only the device nearest a fault will operate to remove a faulted circuit.
   b. System selectively shall be based on both the magnitude and the duration of a fault current.
3. The coordination study shall include all voltage classes of equipment starting at the utility's incoming feeder protective device down to and including each of the medium and low voltage load. The phase and ground overcurrent and ground fault protection shall be included, as well as settings for all other adjustable protective devices.
4. The time-current characteristics of the installed protective devices shall be plotted on the appropriate log-log paper. Reasonable coordination intervals and separation of characteristic curves shall be maintained. The coordination plots for phase and ground protective devices shall be provided on a complete system basis. Sufficient curves shall be used to clearly indicate selective coordination achieved to the utility main breaker, power distribution feeder breakers, and the overcurrent devices at each major load center.
5. There shall be a maximum of six protective devices per plot. Each plot shall be appropriately titled. Plots shall include the following information as required for the circuits shown:
   a. Representative one-line diagram, legend and types of protective devices selected.
   b. Utility’s relays or fuse characteristics.
   c. Significant motor starting characteristics.
   d. Parameters of transformers, ANSI magnetizing inrush and withstand curves.
   e. Operating bands of low voltage circuit breaker trip curves, and fuse curves.
   f. Relay taps, time dial and instantaneous trip settings.
   g. Cable damage curves.
   h. Symmetrical and asymmetrical fault currents.
6. The selection and settings of the protective devices shall be provided separately in a tabulated form listing circuit identification, IEEE device number, current transformer ratios, manufacturer, type, range of adjustment, and recommended settings. A tabulation of the recommended power fuse selection shall be provided for all fuses in the system.

E. Harmonics Study:

1. Provide a harmonics study for the Power System including Utility and alternate sources.
2. The goal of the Harmonic Study shall be:
   a. To identify and quantify all distortions in voltage and current waveforms in the Power System.
   b. To identify and quantify all resonances in the Power System.
   c. To evaluate the performance of the Power System at the PCC under all conditions of normal and alternate operations, ensuring compliance with the Recommended Harmonic Limits of IEEE 519 and or IEEE 3002.8.
   d. To ensure that all remedial measures required to achieve the Recommended Harmonic Limits and mitigate resonances are incorporated into the Power System.
3. Capacitor-Inductor filter traps that require tuning to the power system are not acceptable.
4. The Contractor along with manufacturer of harmonic sources shall provide for the design, furnishing and installation of the remedial measures and appurtenances required to meet the requirements of the Harmonic Study.
5. The Contractor along with the manufacturer of harmonic sources is responsible to provide an updated single line diagram with referenced data within the submittal for this study.
6. The report shall be provided for approval prior to or with the shop drawings of the harmonic sources.
7. Submittals of harmonic sources prior to or without the study will be considered incomplete and not reviewed.

F. Motor Starting Studies

1. Provide Motor Starting Study/Studies to determine the impact of the selected motor starting method/s proposed for this Contract.
2. Motor Stating Study/Studies shall be completed in accordance with IEEE 399 and or IEEE 3002.7
3. The Motor Starting Study/Studies shall include:
   a. Starting Analysis for all motors 150 Hp and above or all motors whose starting impact is significant in relation to the Power System of this Contract.
   b. Starting Analysis shall also be completed for less than 150 Hp motor/s where the following are impacting performance:
      1) Variations in nominal or service voltage.
      2) Size and length of feeder cable.
      3) Simultaneous starting of groups of less than 150 Hp motors.
   c. Determination of the impact of starting at motor bus and remote busses including but not limited to:

1) Motor/s will start with acceptable voltage drop.
2) Motor/s will accelerate within acceptable start-up times.
3) Motor/s are not subjected to nuisance tripping.
4) Voltage deviations will not disrupt loads at the motor bus and remote busses inclusive of stall of running motors.
5) Accurate evaluation of motor/load torque-speed characteristics.
6) Accurate assessment of motor/s life as a function of the starting method selected and thermal damage characteristics.
7) Voltage deviations causing variable performance of solid state and electronic equipment.
8) Voltage deviations causing lighting system/s flicker
9) Confirmation of the type of controller required to start the motor/s.
10) Confirmation of motor/s feeder sizes.

d. Recommendations to alleviate starting deficiencies identified by the Study/Studies.

1) All motors and controllers identified in the Motor Starting Study/Studies requiring specific measures to mitigate disturbances at connected and remote busses shall not be submitted without the mitigation measures clearly identified in the respective submittals.

e. Evaluation of all motor starting when the Power System is connected to the Utility or alternative on site Power Sources.

4. The report shall be provided for approval prior to or with the shop drawings of the harmonic sources. Submittals of harmonic sources prior to or without the study will be considered incomplete and not reviewed.

2.04 SOURCE QUALITY CONTROL / SHOP TESTS

A. Not Used

PART 3 EXECUTION

3.01 EXAMINATION / PREPARATION

A. Study Input

1. The Contractor shall be responsible to ensure that all data to complete the Power System Studies is provided and is input to the software model including but not limited to:

a. Selection of suitable base MVA, base voltage and base current.

b. Utility and on site generation, single and three phase fault current contributions including X/R ratios.

c. Motor contributions and sequence impedances including X/R ratios.

d. Sequence resistance and reactance of all major branches.

e. Transformer impedance, X/R ratios, winding connection, tap ranges and base ratings.

f. Models, test results or characterization of Harmonic Sources.

g. All other circuit parameter to permit the complete and accurate modelling of the Power System.

3.02 INSTALLATION

A.. The results of the Power System Studies shall be summarized in a final typewritten report. The report shall include the following Sections:

1. Executive Summary, Description, purpose, basis, written scope
2. Load Flow
   a. Tabulations of load flow study results inclusive of normal, minimum and maximum branch loadings along with normal, minimum and maximum voltages at nodes.
   b. Tabulations of power losses for the Power System elements and the total power loss for the Power System.
3. Short Circuit
   a. Tabulations of short circuit study results including a definition of terms and guide for interpretation.
4. Protective Device Evaluation
   a. Tabulations of circuit breaker, fuses, and other equipment ratings versus calculated short-circuit duties, and commentary regarding same.
5. Protective Device Coordination
   a. Protective device time versus current coordination curves.
   b. Tabulations of relay and circuit breaker trip settings, fuse selection, and commentary regarding same.
   c. Tabulation of appropriate tap settings for relay seal-in units.
6. Harmonic Study.
   a. Tabulation of Harmonic Sources including all VFDs operating simultaneously operating over their speed range under normal and alternate operations of the Power System.
   b. Branch and node voltage and current harmonic current as a percentage of the 60 Hz fundamental up to the fiftieth harmonic, inclusive of the simultaneous operation of harmonic sources to meet specific actual loadings of the Power System.
   c. All calculations used to arrive at the recommendations.
   d. Explanation of the methods used to perform the study.
   e. Explanation of study results with specific recommendations on filters and/or other measures that will be implemented to meet the specified limits or mitigate expected resonances.
7. Diagrams
   a. Single line diagram along with suitable and relevant back annotation shall be included for each alternative of the Power System studied.

b. An impedance diagram along with suitable and relevant back annotation shall be included for each alternative of the Power System studied.

8. Software Model Files

a. The Contractor shall provide two copies of the software files used to provide the Power System Studies

1) One copy of the software file shall be write protected and shall be capable of all its elements being viewed in the software program stated in this Section.

2) The second copy of the software file shall not be write protected and shall be capable of all its elements being modified by the software program stated in this Section.

3.03 FIELD TESTING / QUALITY CONTROL

A. Field Testing

1. The Contractor shall provide field testing of the Power System.
2. All field testing shall be performed by the testing firm, after the completion and approval of the Power System Studies.
3. The field testing shall be witnessed by the Engineer and certified by the Contractor.
4. The testing firm shall adjust, set, calibrate and test all protective devices. All protective relays and meters in the medium and low voltage equipment shall be set, adjusted, calibrated and tested in accordance with the manufacturer's recommendations, the coordination study and best industry practice.
5. Proper operation of all equipment associated with the device under test and its compartment, shall be verified, as well as complete resistance, continuity and polarity tests of power, protective and metering circuits. Any minor adjustments, repairs and/or lubrication necessary to achieve proper operation shall be considered part of this Contract.
6. All solid state trip devices shall be checked and tested for setting and operation.
7. Circuit breakers and/or contactors associated with the trip devices shall be tested for trip and close function with their protective device.
8. Testing shall be performed at each major node to which harmonic sources are connected to determine if the predicted recommendations of the Harmonic Study have been achieved.
9. Test will measure and compare the harmonic levels with respect to those detailed in the Harmonic Study.
10. All harmonic levels of voltage and current which do not meet the recommendations of the Harmonic Study shall be corrected at the Contractor's expense.
11. All tests shall be in accordance with the manufacturer's recommendations and NETA, ATS.
12. The Contractor shall provide a field testing report. The report shall be in accordance with NETA, ATS.

3.04 STARTUP / DEMONSTRATION

A. Maintenance of Operations

1. Since the field testing work specified shall require that equipment be taken out of service, the Contractor shall perform field testing with due regard to maintenance of operations and construction staging in accordance with this Section and the Specifications.
2. All testing procedures and schedules must be scheduled in advance prior to any work beginning.

3.05 ADJUSTING / PROTECTION / CLEANUP

A. Not Used

END OF SECTION

No Text On This Page

SECTION 26 05 53 – IDENTIFICATION FOR ELECTRICAL SYSTEMS – IG/PC

PART 1 GENERAL

1.01 SUMMARY

A. Requirements for providing labeling and identification.

1. Labeling and identification shall be provided in accordance with the requirements specified under this Section, the Specifications and the Contract Drawings.
2. The labeling and identification is intended to provide identification of electrical equipment.

B. The work shall include providing all voltage signs, equipment nameplates, markers, arc flash labels and tags for all electrical equipment furnished under this Contract.

1.02 PAYMENT

A. There is no separate payment provision for this Section.

1.03 RELATED SECTIONS

A. Section 26 05 20 - Low-Voltage Cables and Accessories

B. Section 26 05 33 - Raceways and Boxes for Electrical Systems

C. Section 40 05 07 - Hangers and Supports for Process Piping.

1.04 REFERENCES

A. Labeling and identification shall comply with the latest applicable provisions and recommendations of the following:

1. NYCEC - New York City Electrical Code.
2. NFPA 70E - Standard for Electrical Safety in the Workplace.
3. IEEE 1584 - IEEE Guide for Performing Arc-Flash Hazard Calculation
4. ANSI Z535.4 - American National Standard for Product Safety Signs and Labels.
5. BWT Arc Flash - Arc Flash Personal Protective Equipment BWT Guidelines.
6. OSHA 1910 Subpart S - Electrical.

1.05 DESCRIPTION

A. Not Used

1.06 QUALITY ASSURANCE

A. All labeling and identification signs and nameplates shall be provided in accordance with the NYCEC, NFPA 70E and OSHA 1910 Subpart S.

1.07 SUBMITTALS

A. Contractor shall submit Shop Drawings and material specifications for the approval of the Engineer. Submittals shall include but not be limited to:

1. Prior to equipment submission, submit a list of proposed manufacturers with the products they produce proposed for the contract.
2. Submit signs, nameplates and other labeling and identification devices proposed for use with specifications and other data required to demonstrate compliance with the specified requirements.

1.08 DELIVERY, STORAGE, AND HANDLING

A. The labeling and identification devices shall be delivered, stored and handled in accordance with the Specifications and the manufacturer's recommendations.

1.09 INCIDENTAL PARTS, SPECIAL TOOLS, AND SUPPLIES

A. Not Used

1.10 SPECIAL WARRANTY PROVISIONS / GUARANTEE PERIODS

A. Not Used

PART 2 PRODUCTS

2.01 MANUFACTURERS

A. Labels shall be as manufactured by:
   1. Brady, Milwaukee, WI;
   2. Seton Nameplate Corporation, North Branford, CT;
   3. Or approved equal.

2.02 MATERIALS / EQUIPMENT

A. Equipment Nameplates
   1. Equipment nameplates shall be provided in addition to the manufacturer's nameplate, to identify the equipment number and the item's function and the equipment to which it serves.
   2. Equipment nameplates shall be provided in accordance with the requirements specified under this Section and Section 40 05 07 - Hangers and Support for Process Piping.
   3. Equipment nameplates shall be laminated plastic with black letters on a white background. Nameplates for equipment identification shall have 1/2-inch high letter engravings. Nameplates for pilot device identification shall have 1/4-inch high letter engravings.
   4. Nameplates for distribution equipment shall have the following information:
      a. Equipment name and number.
      b. Voltage.
      c. Phases and number of wires.
   5. Pull boxes, junction boxes and control stations shall have a nameplate identifying the equipment name and number.
   6. All feeders and branch circuit devices shall have nameplates identifying the served equipment name and number. Where execution of the work under this Contract

requires certain feeders and branch circuit devices to be modified, the Contractor shall provide new nameplates reflecting the modifications. The nameplates shall identifying the served equipment name and number.

7. All control and indicating devices shall have individual nameplates identifying device function.
8. Nameplate mounting screws shall be 3/16 inch diameter, round-head, stainless steel and self-tapping type. Adhesives shall not be used.

B. Conduit Markers and Tags

1. Conduit markers and tags shall be provided for the identification of the electric conduit system.
2. Conduit markers and tags shall be in accordance with Section 26 05 33 - Raceways and Boxes for Electrical Systems.

C. Cable and Wire Markers

1. Cable and wire markers shall be provided for the identification of the electric wire and cable.
2. Cable and wire markers shall be in accordance with Section 26 05 20 - Low-Voltage Wires, Cables and Accessories.

D. Arc Flash Labels

1. Labels shall be provided in addition to the manufacturers nameplate and equipment nameplate, to identify equipment name, bolted fault and arcing fault current levels, flash protection boundary distances, working distances, personal-protective equipment classes and AFIE (Arc Flash Incident Energy) levels.
2. Labels shall be able to withstand their usage environment, the print shall not fade, and adhesive should be aggressive enough to avoid peeling. The arc flash labels shall be printed on a durable polyester base over-laminated to protect the text and graphics. The back of the labels shall employ an acrylic adhesive, which allows the labels to be securely and permanently affixed to a wide range of surfaces. Labels shall include no field markings. Labels shall be generally in accordance with ANSI Z535.4.
3. Labels shall include at a minimum the following information based on the Arc Flash Hazard Analysis performed:
   a. Nominal Voltage of the Equipment
   b. Flash Protection Boundary
   c. Personal Protective Equipment category at the working distance
   d. Arc Flash Incident Energy Value (cal/cm²) at the working distance
   e. Limited and Restricted Boundaries
   f. Study Report Number and Issue Date
   g. Location of Study Report.

2.03 FABRICATION / ASSEMBLING / FINISHES

A. Not Used

2.04 SOURCE QUALITY CONTROL / SHOP TESTS

A. Not Used

PART 3 EXECUTION

3.01 EXAMINATION / PREPARATION

A. Not Used

3.02 INSTALLATION

A. Signs and Nameplates

1. All signs, nameplates and tags shall be installed neatly, properly and as recommended by the manufacturers.
2. Signs and nameplates shall be mounted with screws. Where mounting of signs or nameplates with screws is impractical, the Contractor shall alert the Engineer.

B. Signal Wire and Cable

1. Control, signal and status wire and cable shall be identified by a unique number. The numbering system shall reflect the actual identification used in the work and shall be documented on the point-to-point wiring diagrams.

3.03 FIELD TESTING / QUALITY CONTROL

A. Not Used

3.04 STARTUP / DEMONSTRATION

A. Not Used

3.05 ADJUSTING / PROTECTION / CLEANUP

A. Not Used

END OF SECTION

SECTION 26 05 75 – SHOCK HAZARD AND ARC FLASH STUDIES – IG/PC

PART 1 GENERAL

1.01 SUMMARY

A. Requirements for providing Shock Hazard and Arc Flash studies: Studies for determining Shock Hazard Boundaries and Arc Flash Incident Energies, in and around all electrical equipment, and notifying all personnel of boundaries and energies, shall be provided in accordance with the requirements of the Contract Drawings and the Specifications and this Section.

B. The Shock Hazard and Arc Flash Studies shall include a short circuit study and a protective device coordination study. Approval shall be obtained for the use of information from existing short circuit and protective device coordination studies.

1.02 PAYMENT

A. There is no payment provision for this Section.

1.03 RELATED SECTIONS

A. Requirements from the following Sections are also referenced in this Section:

1. Section 26 05 11 - General Electrical Requirements
2. Section 26 05 53 - Identification for Electrical Systems
3. Section 26 05 73 - Power System Studies

1.04 REFERENCES

A. Definitions

1. AC - Alternating Current
2. Electric Utility or Utility - Consolidated Edison Company of New York
3. Arc Flash Studies - Shock Hazard and Arc Flash Studies
4. AFIE - Arc Flash Incident Energy
5. SHB - Shock Hazard Boundary
6. PE or Professional Engineer or Licensed Engineer - Licensed Professional Engineer in the State of New York

B. Reference Standards. The Shock Hazard and Arc Flash Studies shall comply with the latest applicable provisions and recommendations of the following:

1. ANSI Z535.4 - Product Safety Signs and Labels
2. BWT Arc Flash - Arc Flash Personal Protective Equipment BWT Guidelines.
3. IEEE 141 - IEEE Recommended Practice for Electric Power Distribution for Industrial Plants
4. IEEE 242 - IEEE Recommended Practice for Protection and Coordination of Industrial and Commercial Power Systems
5. IEEE 399 - IEEE Recommended Practice for Industrial and Commercial Power System Analysis

6. IEEE 1015 - IEEE Recommended Practice for Applying Low-Voltage Breakers Used in Industrial and Commercial Power Systems
7. IEEE 1584 - IEEE Guide for Performing Arc-Flash Hazard Calculations
8. IEEE C37.04 - IEEE Standard Rating Structure for AC High-Voltage Circuit Breakers Rated on a Symmetrical Current Basis.
9. IEEE C37.010 - IEEE Application Guide for AC High-Voltage Circuit Breakers Rated on a Symmetrical Current Basis.
10. IEEE C37.13 - IEEE Standard for Low-Voltage Power Circuit Breakers used in Enclosures.
11. NFPA 70E - Standard for Electrical Safety in the Workplace
12. NYCEC - New York City Electrical Code
13. OSHA 1910 Subpart S - Electrical

1.05 DESCRIPTION

A. AC Arc Flash Study Outline. The AC arc flash study shall be conducted on all electrical equipment powered by AC sources. The equipment to be studied shall include all electrical equipment from the Electric Utility Point of Service (POS) to the electrical energy utilization point. This includes but is not limited to:

1. All sources of energy including the electric utility, alternative energy sources, emergency generators, legally required generators, optional standby generators and motors.
2. All medium and low-voltage equipment inclusive of equipment of nominal operating voltage less than 120 VAC.
3. All medium and low-voltage electric distribution equipment including but not limited to switchgears, current limiting reactors, distribution and lighting panelboards, automatic transfer switches (ATS) and control panels.
4. All feeder and branch circuits.
5. All protective devices.

B. Arc Flash Study Modes

The arc flash study shall be conducted for different modes of electric equipment operation and the modes producing the most severe arc flash incident energy and the most restrictive shock hazard boundary shall be selected for the display on the required labels. Modes will be as directed by the Engineer but at a minimum shall be as listed below:

1. Mode 1 – All electric utilization equipment which are normally operated, are in the ON STATE and connected in their normal configurations to the normal sources. In the normal configuration, devices such as tie breakers which are normally in the open state remain in the open state for this mode.
2. Mode 2 – As Mode 1 but with all electric utilization equipment in the OFF STATE.
3. Mode 3 – All emergency and standby electric utilization equipment are in the ON STATE and connected to sources activated by the loss of the normal sources.
4. Mode 4 – As Mode 3 but with all emergency and standby electric utilization equipment in the OFF STATE.

1.06 QUALITY ASSURANCE

A. General:

1. Arc Flash Studies shall be completed using the approved computer software programs detailed in this Section.
2. Arc Flash Studies completed manually will not be accepted.
3. The Arc Flash Studies shall be performed in accordance with the latest applicable provisions and recommendations of the Reference Standards listed in this Section.
4. The Contractor shall retain the services of a Licensed Professional Engineer to perform Arc Flash Studies. This Licensed Engineer to perform Arc Flash Studies shall be from an independent engineering firm, or as directed by the Engineer. The Licensed Engineer to perform Arc Flash Studies shall have at least five (5) years' experience in conducting Industrial Power System Studies inclusive of Arc Flash Studies for projects of similar scope.
5. The Contractor shall coordinate with this Licensed Engineer performing the studies, and assist the Licensed Engineer in the collection of all information necessary to complete the studies specified.

1.07 SUBMITTALS

A. Submittals General

1. Contractor shall submit working drawings, shop drawings and material specifications for the approval of the Engineer in accordance with the requirements of this Section and the Specifications.
   a. Qualifications of proposed Licensed Professional Engineers/ Engineering firms that will conduct arc flash studies shall be submitted.
      1) Submit firm experience records demonstrating at least five (5) years conducting power system studies inclusive of shock hazard and arc flash studies along with the contact information of five (5) references for installations where arc flash studies have been completed.
      2) The contact information shall include name, phone numbers, email and address of the references.
      3) The contacts shall be able to speak about the work done at the reference locations.
   b. Confirmation of the name and version of the approved software package that will be used in the Arc Flash Studies. The software package shall be capable of producing samples of all equipment labels recommended even if final labels will be produced by a third party vendor.
   c. Calculations and results of the arc flash studies shall be submitted. The arc flash studies shall be submitted in a report format. The report shall contain recommended samples of the labels required for each type of equipment where personnel shall be required to interface with electrical equipment for operation, adjustment, repair or modification. The report shall be stamped and signed by the Licensed Engineer.

d. Electronic copies of the results of the arc flash studies shall be submitted in addition to the above report. The format of the electronic submissions files shall permit and allow the following:

1) The review of all submittals in the approved software program detailed in this Section.

2) The review of all submittals by common readers such as Adobe Acrobat.

e. Work sequence for the application of equipment labels shall be submitted. The sequence shall indicate the schedule of work, time frame and downtime if any for the equipment. The work sequence shall be submitted at least 45 days in advance prior to confirmation of field labeling dates.

B. Preliminary Arc Flash Studies

1. Preliminary Arc Flash Studies shall be submitted to the Engineer prior to receiving final approval of the distribution equipment shop drawings and/or prior to release of equipment drawings for manufacturing. If completion of the preliminary study may cause delays in equipment shipments, approval from the Engineer shall be obtained for a preliminary submittal of data to ensure that the selection of device ratings and characteristics will be satisfactory to properly select the distribution equipment. Final formal arc flash studies shall be provided to verify preliminary findings.

C. Label Application Reports

1. A report shall be submitted detailing the equipment labeled and whether it was not possible to accomplish the labeling of specific pieces of equipment and the reasons for this.

1.08 DELIVERY, STORAGE, AND HANDLING

A. Not Used

1.09 INCIDENTAL PARTS, SPECIAL TOOLS, AND SUPPLIES

A. Not Used

1.10 SPECIAL WARRANTY PROVISIONS / GUARANTEE PERIODS

A. Not Used

PART 2 PRODUCTS

2.01 MANUFACTURERS

A. Arc Flash Study computer software shall be as manufactured by

1. Power Analytics Corporation, Raleigh NC

2. Or Equal is not applicable.

2.02 MATERIALS / EQUIPMENT

A. Computer Software

1. DesignBase 6.0 (or Version Approved by the Engineer) shall be the only software to be used to conduct Arc Flash Studies.

2.03 FABRICATION / ASSEMBLING / FINISHES

A. Shock Hazard Study

1. For each piece of equipment a shock hazard analysis complying with the requirements of NFPA70E shall be completed and shall detail the following as minimum:

   a. Equipment and subpart if applicable

   b. Nominal voltage

   c. Restricted approach boundary

   d. Limited approach boundary

   e. Flash protection boundary

   f. Short Circuit Amps

   g. Protective Device clearing time.

B. Arc Flash Study

1. The Arc Flash analysis shall cover the Modes of operation detailed in this Section, ensuring that each node is studied for each of maximum and minimum short circuit contribution of the energy sources connected to the system. The following shall be completed:

   a. Confirm the results of Section 26 05 73 - Power System Studies

   b. Extend the results of Section 26 05 73 - Power System Studies as required to complete the arc-flash study

   c. Calculate the arc fault currents

   d. Determine the protective device operating times

   e. Determine the incident energies

   f. Determine the flash protection boundaries

   g. Determine the incident energies at the boundaries determined in the shock hazard analysis and at the working distance.

   h. Determine the Hazard/Risk categories at the boundaries determined in this Section.

   i. Recommend the appropriate required level of PPE for workers within the flash protection boundaries, the shock hazard boundaries and the working distance.

C. Reports

1. A report shall be submitted detailing the results of this study, and color copies of labels that will be prepared for each piece of equipment. The report shall contain at the minimum the following information:

   a. Executive Summary including Introduction, Scope of Work and Results/Recommendations

   b. All raw data collected and organized by common category

   c. Study One Line Diagrams for each configuration

   d. Impedance Diagrams for each configuration

e. Complete Fault and Protective Device Coordination Study

f. Shock Hazard/Arc Flash Analysis results, inclusive of tabular listing showing for each piece of equipment the following minimum information:

1) Equipment and Subpart

2) Nominal Operating Voltage

3) Restricted Approach Boundary

4) Limited Approach Boundary

2.04 SOURCE QUALITY CONTROL / SHOP TESTS

A. Not Used

PART 3 EXECUTION

3.01 EXAMINATION / PREPARATION

A. Approval Data Sources

1. The Contractor shall ensure that all other provisions of the Contract are satisfied inclusive of all vendors of electrical equipment has been approved, all working drawings and as built data relating to all equipment submitted and approved.

2. The Contractor shall ensure that the results of Section 26 05 73 – Power System Studies have been submitted and the settings of all protective devices have been approved.

3. The Contractor shall not commence the arc flash study until all prior studies and submittals to be reused in the arc flash study has been submitted and approved.

4. Arc Flash studies based on equipment or equipment data and settings which have not been approved, as required in an earlier stage of the project, will be rejected outright.

B. Data Collection and Modelling

1. The Contractor shall ensure that the collection of all data required to support studies under Section 26 05 73 – Power System Studies and Studies under this Section are input into a comprehensive and accurate software model of the electrical distribution system.

2. Data shall include but not be limited to:

a. Maximum and minimum short circuit infeed data of all sources including current magnitudes, X/R ratios and sequence values.

b. Information on all installed equipment such as cable lengths, cable sizes, and cable impedance per unit length.

c. All data to determine clearing times of protective devices.

3. An accurate and comprehensive model of the electrical distribution system shall permit the evaluation of the short circuit currents at all nodes in the system. The model shall also permit the coordination of protection devices installed at nodes upstream and downstream of a specific node.

4. All nodes incorporated in the model shall be approved before any analyses are commenced.

3.02 INSTALLATION

A. Arc Flash Labels

1. Arc Flash labels shall be provided in accordance with Section 26 05 53 - Identification for Electrical Systems.
2. The Contractor shall affix arc flash labels to each piece of equipment.
3. The arc flash labels shall contain the results of this Section.
4. The label content and the schedule governing the placement of labels shall be approved by the Engineer before affixing the labels to the equipment.
5. Each label shall indicate location in the facility of a copy of the studies generating the labels.

3.03 FIELD TESTING / QUALITY CONTROL

A. Not Used

3.04 STARTUP / DEMONSTRATION

A. Training

1. The Contractor shall conduct training of the owner's qualified electrical personnel on the potential arc flash hazards associated with the working of the energized equipment.

3.05 ADJUSTING / PROTECTION / CLEANUP

A. Not Used

END OF SECTION

No Text On This Page

SECTION 26 08 11 – GENERAL ELECTRICAL TESTING – IG/PC

PART 1 GENERAL

1.01 SUMMARY

A. Electrical testing shall be provided in accordance with this Section, the Specifications and the Contract Drawings.

1. The Contractor shall provide all labor, materials, tools, instruments, power and all services necessary to provide the tests specified for all electrical materials, equipment and systems provided under this Contract.

2. The Contractor shall engage the services of an Independent Testing Company (ITC) to perform specific tests as detailed in this Section and the Specifications.

1.02 PAYMENT

A. There is no separate payment provision for this Section.

1.03 RELATED SECTIONS

A. Section 26 05 11 – General Electrical Requirements

B. Section 26 05 27 – Grounding

C. Section 25 05 29 – Hangers and Supports for Electrical Systems

D. Section 26 05 53 –Identification for Electrical Systems.

E. Section 26 05 73 - Power System Studies.

F. Section 26 05 75 – Shock Hazard and Arc Flash Studies.

1.04 REFERENCES

A. Definitions

1. Plant refers to facilities used for the processing and conveyance of water or wastewater and includes pump stations, water and wastewater processing or treatment facilities.

2. Low-voltage as used in this Section and the Specifications shall mean all equipment, conductors, insulation systems and accessories intended for operation within the 600 Volt Class.

3. All references to the Electric Utility or Utility shall mean ConEd or the Local Electric Utility having jurisdiction.

B. Reference Standards

1. NETA ATS - Standard for Acceptance Testing Specifications for Electrical Power Equipment and Systems.

2. NYCEC - New York City Electrical Code.

3. Infraspection Institute - Standard for Infrared Inspection of Electrical Systems & Rotating Equipment.

1.05 DESCRIPTION

A. Upon completion of the electrical installation, the Contractor shall perform tests to demonstrate that the entire electrical system is in proper working condition and is in accordance with the Contract Drawings and the Specifications.

1. Tests shall be as outlined in this Section and those of the individual Sections.
2. Field tests shall be in addition to the factory tests on individual items previously performed at the manufacturer's plant.
3. Perform insulation integrity tests and ground resistance tests before operating tests.
4. Determine proper rotation of motors before permanent connections are made.

1.06 QUALITY ASSURANCE

A. ITCs conducting Electrical Testing shall

a. Have a minimum of 10 years conducting tests as detailed in NETA ATS
b. Be a firm independent of any parties to the Contract
c. Be a firm independent of the Engineer or the Designer
d. Be a NETA Accredited Company deploying NETA certified personnel.

B. ITCs conducting Thermographic Testing shall

a. Have a minimum of 10 years conducting tests as detailed by the Infraspection Institute
b. Be a firm independent of any parties to the Contract.
c. Be a firm independent of the Engineer or the Designer
d. Deploys Infraspection Institute certified personnel.

C. Calibration of Equipment

1. All test instruments and test equipment shall have been calibrated within the 12 month period immediately preceding the dates when they will be used on this Contract.
2. All test instruments and test equipment shall bear the calibration marks, stamps or seals of an approved testing body or agency with reference standards directly traceable to those held by the National Institute of Standards and Technology (NIST).

1.07 SUBMITTALS

A. Contractor shall submit working drawings, shop drawings and material specifications for the approval of the Engineer.

B. Submittals shall include, but not be limited to, the following:

1. Organization of the Testing Companies inclusive of details of the specific personnel that will be utilized on specific tests.
2. Documentation detailing firm accreditation
3. Qualifications of testing personnel
4. Proposed testing methods and schedules, test setup and sample data sheets
5. Calibration Reports of test equipment

6. All field test reports.

1.08 DELIVERY, STORAGE, AND HANDLING

A. Not Used

1.09 INCIDENTAL PARTS, SPECIAL TOOLS, AND SUPPLIES

A. Not Used

1.10 SPECIAL WARRANTY PROVISIONS / GUARANTEE PERIODS

A. Not Used

PART 2 PRODUCTS

2.01 MANUFACTURERS

A. Not Used

2.02 MATERIALS / EQUIPMENT

A. Not Used

2.03 FABRICATION / ASSEMBLING / FINISHES

A. Not Used

2.04 SOURCE QUALITY CONTROL / SHOP TESTS

A. Factory Tests

1. Factory and witnessed shop testing requirements shall be as detailed in the individual equipment Sections.

PART 3 EXECUTION

3.01 EXAMINATION / PREPARATION

A. Schedules/Scheduling

1. Written notice of the intent to proceed with any scheduled and approved tests shall be given to the Engineer at least two (2) weeks in advance of the commencement of the testing.
2. When testing requires that certain pieces of equipment be taken out of service, all testing procedures and schedules must be submitted to the Engineer for review and approval 45 days prior to the two (2) week notice above.
3. When testing has been scheduled as above, the Plant Superintendent must be notified 48 hours prior to any work to allow time for load switching and/or alternation of equipment.
4. All testing that requires temporary shutdown of Plant equipment must be coordinated with Plant Superintendent so as not to affect proper Plant operations.
5. At the end of the each workday, all equipment shall be back in place and ready for immediate use should a plant emergency arise.
6. In addition, should an emergency condition occur during testing, at the request of either the Plant Superintendent or the Engineer or the Engineer's designated

representative attending the testing, the equipment shall be placed back in service immediately and turned over to Plant.

7. In the event of accidental shutdown of Plant equipment the Contractor shall notify Plant Superintendent or the Engineer or the Engineer's designated representative immediately to allow for an orderly restart of affected equipment.

3.02 IMPLEMENTATION

A. Test Personnel/Test Equipment

1. The Contractor shall furnish all instruments and qualified personnel for all tests.
2. The Contractor and where applicable in conjunction with the ITC, shall furnish all instruments and qualified personnel for all tests.

B. Attendance at Tests

1. All tests shall be made in the presence of the Engineer or a duly authorized representative of the Engineer.
2. A manufacturer's representative in accordance with the requirements of the specific equipment Section shall be present at all equipment tests
3. When the presence of the Engineer or the Engineer's representative is waived, sworn statements, in duplicate, of the tests made and the results thereof shall be furnished to the Engineer by the Contractor.

C. Tests/Testing by Others

1. The Electrical Contractor shall make available the electrical system and personnel when required by other Contractors to test their respective equipment.
2. The Electrical Contractor shall coordinate their resources with the other Contractors.

3.03 FIELD TESTING / QUALITY CONTROL

A. Non ITC Testing

1. The Contractor shall complete all testing not required to be completed by an ITC including:
   a. All low-voltage equipment testing.
   b. All raceway testing not requiring the use of medium-voltage test methods.
   c. All low-voltage cable testing utilizing low-voltage or extra-low voltage methods.
   d. All phasing verifications utilizing low-voltage or extra-low voltage methods.
   e. All continuity testing utilizing low-voltage or extra-low voltage methods
   f. All ground system bonding and continuity testing utilizing low-voltage or extra-low voltage methods.
   g. All low-voltage voltage and potential testing and verifications.

B. ITC Testing

1. An independent testing company comprised of NETA certified test personnel and project administrators shall be retained by the Contractor to complete the following:
   a. All medium-voltage equipment testing.

b. All medium-voltage cable testing.

c. All dielectric tests.

d. All low-voltage and medium-voltage protective device testing and setting related to Arc Flash Studies.

e. All low-voltage and medium-voltage Protective Device testing and calibration.

f. All potential and current transformer testing and determination of performance curves.

g. All Primary and Secondary injection tests of protective device systems.

h. All ground systems testing.

2. Thermographic Testing and Imaging

a. An independent testing company comprised of Infraspection Institute certified test personnel and project administrators shall be retained by the Contractor to complete the following:

1) All thermographic testing of electrical equipment.

2) As required by specific Sections.

b. The level of plant loading of equipment subject to Thermographic Testing shall be as specified in the equipment Section but shall not less than 60 percent of the rated equipment load.

C. Final Field Testing

1. The Contractor shall complete the installation and testing of the electrical installation at least two (2) months prior to the startup and testing of all other Work of the Contract.

2. During the period between the completion of electrical installation and the startup and testing of all other Work, the Contractor shall make all completed and serviceable components of the electrical installation available to the other Contractors for their use in performing Preliminary and Final Field Tests.

3. Before each test commences, the Contractor shall submit a detailed test procedure and also provide manpower and scheduling for the approval of the Engineer.

4. The Contractor shall furnish detailed test procedures for any equipment required as part of the field tests of systems by other contractors.

3.04 STARTUP / DEMONSTRATION

A. Not Used

3.05 ADJUSTING / PROTECTION / CLEANUP

A. Not Used

END OF SECTION

No Text On This Page

SECTION 26 09 23 – LIGHTING CONTROL DEVICES - IG/PC

PART 1 GENERAL

1.1 SUBMITTALS

A. Submittals Package: Submit the shop drawings, and the product data specified below at the same time as a package.

B. Shop Drawings: Wiring and/or schematic diagram of the control circuits as proposed to be installed (standard diagrams will not be accepted.

C. Product Data: Catalog sheets, specifications and installation instructions.

PART 2 PRODUCTS

2.1 TIME CONTROLS

A. Astronomic Dial: Intermatic Inc.'s V45000CR Series, Paragon Electric Co.'s 4213-SZ Series, Tork Inc.'s ZL Series or approved equal, having:

1. Surface mounted NEMA 3 enclosure, with lockable hasp.
2. Day omitting device, with 3 omitting screws.
3. 120 volt operation, DPST, minimum rating 40A per pole.
4. Mechanical reserve power feature to keep dial on time for minimum of 10 hours in event of power failure.

PART 3 EXECUTION

3.1 INSTALLATION

A. Install lighting controls in accordance with manufacturers printed instructions unless otherwise indicated.

B. Wire circuit so that lighting is:

1. On at dusk by time control.
2. Off at dawn by time control.

END OF SECTION

No Text On This Page

ECTION 26 22 13 – LOW-VOLTAGE DISTRIBUTION TRANSFORMERS – ESCR IG/PC

PART 1 - GENERAL

1.01 SUMMARY

A. Requirements for providing individually mounted dry type transformers. Dry type transformers shall be provided in accordance with the requirements specified under this Section, the Specifications and the Contract Drawings.

1.02 PAYMENT

A. There is no separate payment provision for this Section.

1.03 RELATED SECTIONS

A. Section 26 05 27 - Grounding

B. Section 26 05 29 - Hangers and Supports for Electrical Systems

C. Section 26 05 53 - Identification for Electrical Systems

1.04 REFERENCES

A. Dry type transformers shall comply with the latest applicable provisions and recommendations of the following:

1. NYCBC - New York City Building Code.
2. NYCEC - New York City Electrical Code.
3. UL 1561 - Dry-Type General Purpose and Power Transformers.
4. NEMA ST 20 - Dry Type Transformers for General Application.
5. NIST - US National Institute of Standards and Technology.

1.05 DESCRIPTION

A. Not Used

1.06 QUALITY ASSURANCE

A. General:

1. All transformers shall conform to the applicable NEMA, ANSI and IEEE Standards and shall be built by one approved manufacturer who shall use only best commercial materials and processes of manufacture.
2. Transformer enclosures shall have ample room for primary and secondary wiring connections.
3. All transformers shall be UL listed and certified to ANSI/NEMA sound levels.
4. The transformer manufacturer shall use a shop test facility that has recently calibrated testing apparatus and qualified, experienced technicians, for all shop tests. Calibration of testing apparatus shall be within one year of date of testing.
5. All test equipment and instrument calibration shall be in accordance with the latest edition of the accuracy standard of the U.S. National Institute of Standards and Technology. Calibration of testing apparatus shall be within one year of date of testing.

B. Seismic Requirements

1. The transformer mounting system shall be designed, constructed and installed suitable for earthquake regulations in accordance with the seismic requirements of the NYCBC.
2. Transverse and longitudinal bracing shall be provided as required to brace the transformer for the seismic requirements specified.

C. Field testing of the transformers shall be performed in accordance with the requirements specified under this Section.

1.07 SUBMITTALS

A. Contractor shall submit Shop Drawings and material specifications for the approval of the Engineer. Submittals shall include, but not be limited to:

1. Manufacturer's catalog cuts for the transformers proposed for use.
2. Dimensional drawings showing transformer details with diagrammatic nameplate.
3. Transformer anchorage and mounting details prepared and stamped by a licensed engineer.
4. Description of shop and field testing methods, procedures and apparatus with calibration dates shall be submitted. Testing methods and procedures shall be submitted at least 60 days in advance prior to conformation of witness testing dates and actual testing.

B. Shop test and field test reports shall be submitted.

C. Operations and Maintenance Manuals shall be submitted in accordance with the Specifications.

1.08 DELIVERY, STORAGE, AND HANDLING

A. Dry type transformers shall be delivered, stored and handled in accordance with this Section, the Specifications and the manufacturer's recommendations.

1.09 SPARE PARTS, SPECIAL TOOLS, AND SUPPLIES

A. Not Used

1.10 SPECIAL WARRANTY PROVISIONS / GUARANTEE PERIODS

A. Not Used

PART 2 - PRODUCTS

2.01 MANUFACTURERS

A. Dry type transformers shall be as manufactured by:

1. Olsun Transformers
2. Square D
3. ABB
4. Or approved Equal

2.02 MATERIALS / EQUIPMENT

A. General Purpose Transformers

1. General purpose transformers shall be of the dry, commercially quiet, low temperature rise type consisting of two windings per phase.
2. Transformers shall have kVA rating, primary voltage and connection, secondary voltage and connection and number of phases as shown on the Contract Drawings.
3. Conductors for transformer windings shall be copper only.
4. Transformers shall be suitable for indoor or outdoor installation in accordance with the locations shown on the Contract Drawings.
5. Transformer insulation shall be rated 220 degrees C, 80 degrees C rise.
6. Transformers shall be equipped with six 2-1/2 percent fully rated taps, two above and four below the rated voltage tap on the primary winding.
7. The arrangement, assembly, and laminations of the core shall be such as to facilitate repair to the windings.
8. The design, shape, and arrangement of windings shall allow free flow of air for insulation and cooling.

B. Shielded Isolation Transformers

1. Shielded isolation transformers shall conform to the requirements specified under this Section for General Purpose Transformers and the following:
   a. Shielded isolation transformers shall also include an electrostatic shield, grounded to the transformer case, to attenuate electrical noise.

C. Non-Linear Load Transformers

1. Non-linear load transformers shall conform to the requirements specified under this Section for General Purpose Transformers and the following:
   a. Non-linear load transformers shall be specifically designed for non-sinusoidal loads.
   b. Transformers shall be K-factor rated as shown on the Contract Drawings.
   c. Transformers shall be provided with oversize neutral suitable to handle at least 200 percent of normal phase current.

2.03 FABRICATION / ASSEMBLING / FINISHES

A. Not Used

2.04 SOURCE QUALITY CONTROL / SHOP TESTS

A. Shop Tests

1. Shop tests shall be performed at the transformer's manufacturer's plant prior to shipment.
2. Shop tests shall demonstrate that the equipment tested conforms to the requirements specified.
3. Each transformer shall be given a routine test in accordance with the latest requirements of UL, ANSI and NEMA standards.

4. The Contractor shall provide a shop test report. The report shall identify the tests performed and the results obtained.
5. Transformer shop tests shall be performed consisting of the following:
    a. Applied potential shall be performed.
    b. Induced potential shall be performed.
    c. No load losses shall be performed.
    d. Voltage ratio shall be performed.
    e. Polarity shall be performed.

PART 3 - EXECUTION

3.01 EXAMINATION / PREPARATION

A. Not Used

3.02 INSTALLATION

A. Transformers shall be installed on walls or floors. Floor mounted transformers shall be installed on one inch of Korfund sound absorber material on raised concrete base at locations shown on the Contract Drawings.

B. Sufficient access and working space shall be provided for ready and safe operation and maintenance.

C. Transformers mounting, supports and restraints shall confirm to the requirements of this Section and Section 26 05 29 – Hangers and Supports for Electrical Equipment.

D. Transformers shall be grounded in accordance with the requirements of Section 26 05 27 – Grounding and as shown on the Contract Drawings.

E. The transformer leads shall be provided with solderless, clamp type cable connectors.

F. Conduit runs shall be arranged for easy removal of the transformers.

G. Transformer nameplates shall be installed for identification of equipment. Nameplates shall be provided in accordance with the requirements of Section 26 05 53 – Identification for Electrical Systems.

3.03 FIELD TESTING / QUALITY CONTROL

A. Insulation resistance tests shall be performed on the transformers after installation.

B. The tests shall be witnessed by the Engineer and certified by the Contractor. The tests shall be performed by the Contractor who shall furnish all testing equipment.

C. The Contractor shall provide a field test report. The report shall identify the tests performed and the results obtained.

3.04 STARTUP / DEMONSTRATION

A. Not Used

3.05 ADJUSTING / PROTECTION / CLEANUP

A. Not Used

END OF SECTION

No Text On This Page

SECTION 26 24 16 – PANELBOARDS – ESCR IG/PC

PART 1 GENERAL

1.01 SUMMARY

A. Requirements for providing all new panelboards. Panelboards shall be provided in accordance with the requirements specified under this Section, the Specifications and the Contract Drawings.

B. Panelboards shall include all power distribution, lighting, appliance and instrument panelboards.

C. The following index of this Section is included for convenience:

1.02 PAYMENT

A. There is no separate payment provision for this Section.

1.03 RELATED SECTIONS

A. Section 26 05 48 - Vibration and Seismic Controls for Electrical Systems

B. Section 26 05 53 - Identification for Electrical Systems.

C. Section 26 05 75 - Shock Hazard and Arc Flash Studies

D. Section 26 43 13 - Low-Voltage Electrical Power Circuits Surge Protective Devices.

1.04 REFERENCES

A. Panelboards shall comply with the latest applicable provisions and recommendations of the following:

1. NEMA PB1 - Panelboards.
2. NIST - US National Institute of Standards and Technology.
3. NYCEC - New York City Electrical Code.
4. NYCBC - New York City Building Code.
5. UL 50 - Enclosures for Electrical Equipment Non-Environmental Considerations.
6. UL 67 - Panelboards.
7. UL 489 - Molded-Case Circuit Breakers, Molded-Case Switches, and Circuit-Breaker Enclosures.
8. UL 943 - Ground Fault Circuit Interrupters.

1.05 DESCRIPTION

A. All panelboards shall be dead-front type with automatic trip-free, bolt-on, molded case circuit breakers.

B. All panelboards shall be equipped with main breakers, 1-pole, 2-pole and 3-pole branch circuit breakers as shown on the Contract Drawings.

C. All panelboards shall be enclosed in flush or surface mounted cabinets as shown on the Contract Drawings.

D. Arc Flash Labels shall be provided for all panelboards in accordance with Section 26 05 75 – Shock Hazard and Arc Flash Studies.

E. All panelboard installation shall comply with Section 26 05 48 – Vibration and Seismic Controls for Electrical Systems and applicable seismic requirements of the NYCBC.

1.06 QUALITY ASSURANCE

A. General

1. All panelboards shall conform to the applicable NEMA and UL Standards and shall be built by one approved manufacturer who shall use only best commercial materials and processes of manufacture.
2. The manufacturer shall have produced panelboards for a minimum of five years.
3. All panelboards shall be UL listed.
4. The panelboards manufacturer shall use a shop test facility that has recently calibrated testing apparatus and qualified, experienced technicians, for all shop tests. Calibration of testing apparatus shall be within one year.
5. All test equipment and instrument calibration shall be in accordance with the latest edition of the accuracy standard of the NIST.

B. Seismic Requirements

1. The panelboards shall be designed, constructed and installed suitable for earthquake regulations in accordance with the seismic requirements of the NYCBC.

1.07 SUBMITTALS

A. Shop Drawings

Contractor shall submit Shop Drawings and material specifications for the approval by the Engineer. Submittals shall include, but not be limited to:

1. Manufacturer's technical information for the panelboards proposed for use including all components.
2. A listing of the panelboards with the number and size of circuit breakers identified.
3. Dimensional drawings showing panelboard enclosure details.
4. Panelboard anchorage details with design calculations signed by licensed Engineer.

B. Certificates of Compliance

1. Seismic qualification certification from the manufacturer including mounting recommendations shall be submitted.

C. Reports

1. Shop test reports shall be submitted.

D. Operations and Maintenance Manuals

1. Operations and Maintenance Manuals shall be submitted in accordance with the Specifications.

1.08 DELIVERY, STORAGE, AND HANDLING

A. Panelboards shall be delivered, stored and handled in accordance with this Section, the Specifications and the manufacturer's recommendations.

1.09 INCIDENTAL PARTS, SPECIAL TOOLS, AND SUPPLIES

A. Not Used

1.10 SPECIAL WARRANTY PROVISIONS / GUARANTEE PERIODS

A. Not Used

PART 2 PRODUCTS

2.01 MANUFACTURERS

A. Panelboards shall be as manufactured by:

1. General Electric
2. Cooper Industries
3. Square D
4. Or approved equal

B. Surge Protective Devices shall be as manufactured by:

1. General Electric
2. Cooper Industries
3. Square D
4. Or approved equal

2.02 MATERIALS / EQUIPMENT

A. Panelboards

1. Ratings:

a. Panelboard frequency shall be 60 Hz.

b. Panelboard ampacities, voltage, number of phases and wires shall be as shown on the Contract Drawings.

c. Panelboards shall be labeled with a UL short circuit rating. All panelboards shall be fully rated.

d. Available short circuit infeed at the panelboard shall be no more than seventy percent of the panelboard short circuit rating.

e. Panelboards rated 240VAC or less shall have a minimum short circuit rating of 10,000A RMS symmetrical, unless shown otherwise on the Contract Drawings.

f. Panelboards rated 480VAC shall have a minimum short circuit rating of 14,000A RMS symmetrical, unless shown otherwise on the Contract Drawings.

2. Cabinets:

a. Cabinets shall be constructed of 12 gauge galvanized steel with stainless steel hardware.

b. Cabinets shall be NEMA 12 for dry, indoor areas and NEMA 4X for corrosive areas. In hazardous locations, panelboards shall have a NEMA 7 rating.

c. Cabinets shall have wiring gutters on the sides.

d. Cabinets shall be at least 5-3/4 inches deep and 20 inches wide for panelboards with maximum branch circuit breakers of 100A. When branch circuit breakers are above 100A, cabinets shall be at least 9-1/2 inches deep and 31 inches wide.

e. Trims for panelboards shall consist of a hinged trim door which does not leave any live parts uncovered and permits the operation of all circuit breakers. In addition, a door-in-door arrangement shall form the dead front panel door covering all parts not covered by the hinged trim door. Both doors shall have concealed hinges with flush type catches and locks. All locks shall be keyed alike.

f. Cabinets shall have identifying nameplates in accordance with the requirements of Section 26 05 53 – Identification for Electrical Systems.

3. Bus Bars:

a. Bus bars shall be copper sized in accordance with UL standards to limit temperature rise on any current carrying part to a maximum of 65 degrees C above an ambient of 40 degrees C maximum.

b. Bus bar taps for single-pole branches shall be arranged for sequence phasing of the branch circuit devices.

c. A bonded ground bus shall be included in all panels.

d. Full-size neutral bars shall be provided for panelboards, unless noted otherwise on the Contract Drawings.

e. Where specifically shown on the Contract Drawings panelboards shall be provided with a 200 percent rated neutral bus suitable for use with non-linear loads. Neutral busing shall have a suitable lug for each outgoing feeder requiring a neutral connection.

4. Circuit Breakers:

a. Circuit breakers shall be the molded case type conforming to UL 489.

b. Breakers shall be the heavy-duty, bolt-on type with quick-make quick-break toggle mechanism for manual as well as automatic operation.

c. Breakers shall have 100 amp frames, with 15 amp trip elements as minimum, unless otherwise shown on the Contract Drawings.

d. All 100 amp frame breakers shall be fixed thermal magnetic trip units.

e. Frame sizes above 100 amp shall have interchangeable thermal magnetic trip units or electronic trip units.

f. Where specifically shown on the Contract Drawings breakers shall be provided with electronic trip units. Electronic trip units shall provide long time, short time, instantaneous and ground fault settings and time adjustments as a minimum.

g. Where specifically shown on the Contract Drawings ground fault circuit interrupters shall be provided. Ground fault breakers shall be equipped with solid state sensing and 5 milliamp sensitivity.

h. Breakers used for lighting circuit switching shall be suitable for the purpose and shall be marked "SWD". Breakers requiring continuous operation shall be provided with a lock-on device.

i. Where specifically shown on the Contract Drawings shunt trips, bell alarms, and auxiliary devices shall be provided.

5. Metering:

a. Where shown on the Contract drawings a UL listed microprocessor metering unit (MU) shall be installed in the panelboard.

b. The MU shall have the capability to monitor all the panelboard outgoing and spare circuits including capacity for an additional twenty percent spare circuits.

c. The MU shall be able to monitor and time stamp at a minimum the following per phase and line values for each circuit:

1) Voltage, Current, Power, Power Factor, VAR and Frequency.

2) Watt Hour and Var Hour both forward and reverse.

d. The MU shall be able to auto-detect sensor rating

e. The MU shall store the energy profile for each circuit in a non-volatile memory for a minimum of one year. The demand interval shall be 15 minutes.

f. MU communications ports and protocols shall be consistent with those adopted for the site or facility and shall be as stated in the Specifications or as shown on the Contract Drawings.

6. Surge Protection:

a. The panelboard shall be provided with surge protective devices complying with Section 26 43 13 – Low-voltage Electrical Power Circuit Surge Protective Devices.

7. Directories:

a. Each panel shall be provided with a directory.

b. The directory shall be protected by a glass or noncombustible plastic cover.

c. The Contractor shall maintain in each panel, during the duration of the Contract, a handwritten directory clearly indicating the circuit breakers in service and the number of spares. This directory shall be updated as work progresses, and final, typewritten directories shall be provided at the end of the Contract.

d. Where execution of the work under this Contract requires certain circuits to be modified, the Contractor shall update the panelboard directories if available to reflect the modifications. Final typewritten directories shall be provided at the end of the Contract.

2.03 FABRICATION / ASSEMBLING / FINISHES

A. Painting

1. All metal surfaces of the panelboard enclosures shall be thoroughly cleaned and given one coat of zinc chromate primer.

2. All interior surfaces shall then be given one shop finishing coat of a nitro-cellulose enamel lacquer.

3. All exterior surfaces shall be given three coats of the same lacquer. The color of finishing coats shall be light gray ANSI No. 61.

2.04 SOURCE QUALITY CONTROL / SHOP TESTS

A. Shop Tests

1. Shop tests shall be performed at the panelboard's manufacturer's plant prior to shipment.
2. Shop tests shall demonstrate that the equipment tested conforms to the requirements specified.
3. Each panelboard shall be given a 60 Hertz, AC, Hi-Pot test, phase to phase and phase to ground, at twice rated voltage plus 1000 volts for one minute, 1500 volts minimum.
4. A shop test report shall be submitted detailing the tests performed and the results obtained, shall

PART 3 EXECUTION

3.01 EXAMINATION / PREPARATION

A. Not Used

3.02 INSTALLATION

A. Panelboards shall be mounted rigidly and securely to the building structure or to supporting devices which are rigidly and securely supported by the building structure.

B. Anchor panelboards to satisfy seismic requirements in accordance with the anchorage details.

C. Panelboards shall be fastened with bolts and expansion shields on concrete or brick, with toggle bolts on hollow masonry units, and with machine screws or welded studs on metal.

D. Mount all panelboards parallel or perpendicular to walls, such that panelboards are installed in a neat and professional manner.

E. All wiring shall be neat within the panelboards. Wires shall be run vertically in the wire gutter and then terminate horizontally at a breaker.

F. The Contractor shall install blanking devices within panelboard spaces so bus bars are not exposed.

G. Install panelboard nameplates for identification of equipment.

H. Panelboard circuits shall be installed so to balance the loads on each of the panelboards.

3.03 FIELD TESTING / QUALITY CONTROL

A. Not Used

3.04 STARTUP / DEMONSTRATION

A. Not Used

3.05 ADJUSTING / PROTECTION / CLEANUP

A. Not Used

END OF SECTION

SECTION 26 27 26 – WIRING DEVICES – IG/PC

PART 1 GENERAL

1.1 SUBMITTALS

A. Product Data: Catalog sheets, specifications and installation instructions.

PART 2 PRODUCTS

2.1 SWITCHES

A. Local Switches, Single Pole:

1. 15A, 120/277 V ac; Bryant's 4801, Crouse-Hinds/AH's 1891, General Electric's GE5931-1G, Hubbell's 1201/1101, Leviton's 1201/1101, Pass & Seymour's 15AC1, Woodhead's 1891 or approved equal.
2. 20A, 120/277 V ac; Bryant's 4901, Crouse-Hinds/AH's 1991, General Electric's GE 5951-1G, Hubbell's 1121/1221, Leviton's 1121/1221, Pass & Seymour's 20AC1, Woodhead's 1991 or approved equal.
3. 30A, 120/277 V ac; Bryant's 3001, Crouse-Hinds/AH's 3991, General Electric's GE 5991-1G, Hubbell's 3031, Leviton's 3031, Pass & Seymour's 30AC1 or approved equal.

B. Local Switches, Double Pole:

1. 15A, 120/277 V ac; Bryant's 4802, Crouse-Hinds/AH's 1892, General Electric's GE5932-1G; Hubbell's 1202/1102, Leviton's 1202/1102, Pass & Seymour's 15AC2, Woodhead's 1892 or approved equal.
2. 20A, 120/277 V ac; Bryant's 4902, Crouse-Hinds/AH's 1992, General Electric's GE5952-1G, Hubbell's 1222/1122, Leviton's 1222/1122, Pass & Seymour's 20AC2, Woodhead's 1992 or approved equal.
3. 30A, 120/277 V ac; Bryant's 3002, Crouse-Hinds/AH's 3992, General Electric's GE5992-1G, Leviton's 3032, Pass & Seymour's 30AC2 or approved equal.

C. Local Switches, Three-Way:

1. 15A, 120/277 V ac; Bryant's 4803, Crouse-Hinds/AH 1893, General Electric's GE5933-1, Hubbell's 1203/1103, Leviton's 1203/1103, Pass & Seymour's 15AC3, Woodhead's 1893 or approved equal.
2. 20A, 120/277 V ac; Bryant's 4903, Crouse-Hinds/AH's 1993, General Electric's GE5953-1G, Hubbell's 1223/1123, Leviton's 1223-2/1123-2, Pass & Seymour's 20AC3, Woodhead's 1993 or approved equal.
3. 30A, 120/277 V ac; Bryant's 3003, Crouse-Hinds/AH's 3993, General Electric's GE5993-1G, Leviton's 3033, Pass & Seymour's 30AC3 or approved equal.

D. Local Switches, Four-Way:

1. 15A, 120/277 V ac; Bryant's 4804, Crouse-Hinds/AH's 1894, General Electric's GE5934-1G, Hubbell's 1204/1104, Leviton's 1204-2/1104-2, Pass & Seymour's 15AC4, Woodhead's 1894 or approved equal.
2. 20A, 120/277 V ac; Bryant's 4904, Crouse-Hinds/AH's 1994, General Electric's GE5954-1G, Hubbell's 1224/1124, Leviton's 1224-2/1124-2, Pass & Seymour's 20AC4, Woodhead's 1994 or approved equal.
3. 30A, 120/277 V ac; Crouse-Hinds/AH's 3994, General Electric's GE5994-1G or approved equal.

E. Local Switches, Key-Operated:

1. Similar to toggle type local switches except operated by removable key instead of lever. Furnish 2 keys with each switch.

F. Local Switch with Neon Pilot:

1. 15A, 120/277 V ac; General Electric's GE7945-1, Leviton's 5226, Pass & Seymour's 692 or approved equal.
2. Switch similar to local switches previously specified, with separate neon pilot (requires 2 gang installation).
   a. Neon pilot (125 V, 1/25W): Bryant's 48071-R, Crouse-Hinds/AH's 1720-RED, General Electric's GE4218-0, Pass & Seymour's 437 or approved equal.

G. Lighted Toggle Switches:

1. Clear toggle, lighted in on position, 15A, 120 V, single pole; Hubbell's 1201-PLC, Leviton's 1201 PLC or approved equal.
2. Ivory toggle lighted in off position, 15A, 120 V; Bryant's 4801-GLI, Crouse Hines/AH's 1891IL, General Electric's SL112-2G, Hubbell's 1201-IL, Leviton's 1201 LHI, Pass & Seymour's 15AC1ISL or approved equal.

H. Dimmer Switches (Incandescent, 120 V ac):

1. 600 Watts; Lutron's C-600, General Electric's DI-61UL or approved equal.
2. 1000 Watts; Lutron's C-1000 or approved equal.
3. 1500 Watts; Lutron's C-1500 or approved equal.
4. 2000 Watts; Lutron's C-2000 or approved equal.

I. Momentary Contact Switches:

1. Three position, center off, toggle, 15A, 120/277 V ac, single pole; Bryant's 4821, Crouse-Hinds/AH's 1895, General Electric's GE5935-1G, Hubbell's 1556, Leviton's 1256, Pass & Seymour's 1250 or approved equal.
2. Three position, center off, key operated, 15A, 120/277 V ac, single pole; Bryant's 4821-L, Crouse-Hinds/AH's 1895-L, General Electric's GE5935-OLG, Hubbell's 1556-L, Pass & Seymour's 1250-L or approved equal.
3. Momentary contact switch with neon pilot. Switch similar to momentary contact switch previously specified, with separate neon pilot (requires 2 gang installation).

a. Neon Pilot: 125 V, 1/125W; Bryant's 48071-R, Crouse-Hinds/AH's 1720-RED, General Electric's GE4218-0, Pass & Seymour's 437 or approved equal.

2.2 RECEPTACLES

A. Specification Grade Receptacles:

1. Single receptacle, NEMA 5-15R (15A, 125 V, 2P, 3W); Bryant's 5251, Crouse-Hinds/AH's 5251, General Electric's 5251-1, Hubbell's 5251, Leviton's 5251, Pass & Seymour's 5251 or approved equal.

2. Duplex receptacle, NEMA 5-15R (15A, 125 V, 2P, 3W); Bryant's 5252/5242 , Crouse-Hinds/AH's 5252/5242, General Electric's GEN5252-1, Hubbell's 5252/5242, Leviton's 5252/5242, Pass & Seymour's 5252/5242 or approved equal.

3. Single receptacle, NEMA 5-20R (20A, 125 V, 2P, 3W); Bryant's 5361/5351, Crouse-Hinds/AH's 5361/5351, General Electric's GE4103-1, Hubbell's 5361/5351, Leviton's 5361/5351, Pass & Seymour's 5351 or approved equal.

4. Duplex receptacle, NEMA 5-20R (20A, 125 V, 2P, 3W); Bryant's 5362, Crouse-Hinds/AH's 5352/5342, General Electric's GE5352-1, Hubbell's 5352, Leviton's 5352, Pass & Seymour's 5352 or approved equal.

B. Safety Grounding Receptacles:

1. Duplex receptacle, NEMA 5-15R (15A, 125 V, 2P, 3W); Bryant's SG-62, 8200S, Crouse-Hinds/AH's 6352, General Electric's GE4058-1, Hubbell's SG-62, Leviton's 5262-SG ,Pass & Seymour's SG-62 or approved equal.

C. Electric Clock Receptacles:

1. Single receptacle, NEMA 5-15R (15A, 125 V, 2P, 3W), brass or stainless steel face plate to match hardware; Bryant's 2828-G, 2828-GS, Crouse-Hinds/AH's 5708, General Electric's GE4224-5, Hubbell's 5233, 5235, Leviton's 5261-CH, Pass & Seymour's S3733, S3733-SS or approved equal.

D. Ground Fault Interrupter Receptacles:

1. Duplex receptacle rated 15A (NEMA 5-15R), circuit-ampacity 20A; Bryant's GFR52FT, Crouse-Hinds/AH's GF5242, General Electric's GF5242, Hubbell's GF5252, Leviton's 6599, Pass & Seymour's 1591S, Daniel Woodheads 5252GF or approved equal.

2. Duplex receptacle rated 20A (NEMA 5-20R), circuit ampacity 20A; Bryant's GFR53FT, Crouse-Hind/AH's GF5342, General Electric's GF5342, Hubbell's GF 5352, Leviton's 6899, Pass & Seymour's 2091S, Daniel Woodheads 5352GF or approved equal.

E. Isolated Ground Receptacles:

1. Single receptacle, NEMA 5-15R (15A, 125 V, 2P, 3W); Bryant's 5261-IG, Crouse-Hinds/AH's IG5261, General Electric's GE-8210-IG, Hubbell's IG4710 &, Leviton's 5261-IG, Pass & Seymour's IG5261 or approved equal.

2. Duplex receptacle, NEMA 5-15R (15A, 125 V, 2P, 3W); Bryant's 5262-IG, Crouse-Hinds/AH's IG-5262, General Electric's GE-8200-IG, Hubbell's IG-5262, Leviton's 5262-IG, Pass & Seymour's IG-6200 or approved equal.

3. Single receptacle, NEMA 5-20R (20A, 125 V, 2P, 3W); Bryant's, Crouse-Hinds/AH's, General Electric's GE8310-IG2, Hubbell's, Leviton's, Pass & Seymour's or approved equal.

4. Duplex receptacle, NEMA 5-20R (20A, 125 V, 2P, 3W); Bryant's, Crouse-Hinds/AH's, General Electric's GE8300-IG, Hubbell's, Leviton's, Pass & Seymour's or approved equal.

F. Corrosion Resistant Receptacles:

1. Duplex receptacle, NEMA 5-15R (15A, 125 V, 2P, 3W): Bryant's 5262-CR, Crouse-Hinds/AH's 5262CR, General Electric's GE5262-C, Hubbell's 5262-ILH ,Pass & Seymour's CR6200 or approved equal.

G. Special Purpose Receptacles: Furnish matching nylon, polycarbonate or armored plug with each receptacle. Furnish matching wall plate with each receptacle (.040" brass, Type 302 stainless steel, weatherproof, threaded box type, as required):

1. Type A: NEMA 14-20R (3P, 4W, 20A, 125/250 V, W/G); Crouse-Hinds/AH's 5759, General Electric's 1420, Hubbell's 8410 or approved equal.

2. Type B: NEMA 14-30R (3P, 4W, 30A, 125/250 V, W/G); Bryant's 9430FR, Crouse-Hinds/AH's 5744N, General Electric's GE4191-3, Hubbell's 9430A, Leviton's 278, Pass & Seymour's 3864 or approved equal.

3. Type C: NEMA 14-50R (3P, 4W, 50A, 125/250 V, W/G); Bryant's 9450FR, Crouse-Hinds/AH's 5754N, General Electric's GE4181-3, Hubbell's 9450A, Leviton's 279, Pass & Seymour's 3894 or approved equal.

4. Type D: NEMA 14-60R (3P, 4W, 60A 125/250 V, W/G); Bryant's 9460FR, Crouse-Hinds/AH's 9460N, General Electric's GE4171-3, Hubbell's 9460A, Pass & Seymour's 3871 or approved equal.

5. Type E: NEMA 10-20R (3P, 3W, 20A, 125/250 V); Bryant's 9326, Crouse-Hinds/AH's 9140, General Electric's GE4124-1, Hubbell's 6810, Pass & Seymour's 6810 or approved equal.

6. Type F: NEMA 10-30R (3P, 3W, 30A, 125/250 V); Bryant's 9303, Crouse-Hinds/AH's 9344N, General Electric's GE4132-3, Hubbell's 9350, Leviton's 5207, Pass & Seymour's 3860 or approved equal.

7. Type G: NEMA 10-50R (3P, 3W, 50A, 125/250 V); Bryant's 9306, Crouse-Hinds/AH's 7985N, General Electric's GE4152-3, Hubbell's 7962, Leviton's 5206GR, Pass & Seymour's 3890 or approved equal.

8. Type H: NEMA L5-15R (2P, 3W, 15A, 125 V, W/G); Bryant's 4710, Crouse-Hinds/AH's 4710, General Electric's GL0510, Hubbell's 4710, Pass & Seymour's 4710 or approved equal.

9. Type I: NEMA L5-20R (2P, 3W, 20A 125 V, W/G); Bryant's 70520FR, Crouse-Hinds/AH's 6200, General Electric's GL0520, Hubbell's 2310A, Pass & Seymour's L520-R or approved equal.

10. Type J: NEMA L5-30R (2P, 3W, 30A, 125 V, W/G); Bryant's 70530FR, Crouse-Hinds/AH's 6330, General Electric's GL0530, Hubbell's 2610A, Leviton's 70530-FR, Pass & Seymour's L530-R or approved equal.
11. Type K: NEMA L6-15R (2P, 3W, 15A, 250 V, W/G); Bryant's 70615FR, Crouse-Hinds/AH's 6560, General Electric's GL0610, Hubbell's 4560, Leviton's 70615FR, Pass & Seymour's 4560 or approved equal.
12. Type L: NEMA L6-20R (2P, 3W, 20A, 250 V, W/G); Bryant's 70620FR, Crouse-Hinds/AH's 6210, General Electric's GL0620, Hubbell's 2320A, Leviton's 70620-FR, or Pass & Seymour's L620-R, Slater's L620R or approved equal.
13. Type M: NEMA L6-30R (2P, 3W, 30A, 250 V, W/G); Bryant's 70630FR, Crouse-Hinds/AH's 6340, General Electric's GL0630, Hubbell's 2620, Pass & Seymour's L630-R or approved equal.
14. Other Types: As produced by Bryant, Crouse-Hinds/AH, General Electric, Hubbell, Pass & Seymour or approved equal. NEMA configuration and ratings to suit requirements or approved equal.

2.3 WALL PLATES

A. Stainless Steel Wall Plates: Type 302 stainless steel with satin finish; Bryant's 93 Series, Crouse-Hinds/AH's 93_Series, General Electric's 93 Series, Hubbell's 93 Series, Leviton's 910-40 Series, Pass & Seymour's 93 Series or approved equal.

B. Weatherproof Covers: Crouse-Hinds WLRS, WLRD, Hubbell's 52, 74 Series, Pass & Seymour's 45 Series or approved equal.

C. Covers for Threaded Type Boxes: Stamped sheet steel, gasketed device covers as produced by Hoffman Co, Crouse-Hinds Co., OZ/Gedney, Co or approved equal.

2.4 NAMEPLATES

A. Phenolic Type: Standard phenolic nameplates with 3/16 inch minimum size lettering engraved thereon.

B. Embossed Aluminum: Standard stamped or embossed aluminum tags, 3/16 inch minimum size lettering, as produced by Seton Name Plate Corp., Tech Products Inc, MGC Metal Grafix, American Nameplate or approved equal.

2.5 OCCUPANCY SENSOR

A. Passive Infrared (PIR) Line voltage ceiling mounted lighting occupancy sensor with built in daylight harvesting photocell Leviton Model No. 02C15-IDW, Cooper Lighting Solution Model No. OAC-P-1500DMV, Hubbell Control Solution Model No. OMNI-DT or approved equal.

PART 3 EXECUTION

3.1 INSTALLATION

A. Install wiring devices in outlet boxes.

B. Local Switches:

1. Install local switches rated 15A, 120/277 V ac for switches unless otherwise shown on the drawings or specified.

2. Install switches indicated Sa, Sb, Sc, etc, for control of outlets, with corresponding letters on the same circuit.
3. Where more than one switch occurs at same location in a 120 volt system, arrange switches in gangs and cover with one face plate.
4. Install switches in a 277 volt system in separate single boxes if voltage between exposed live metal parts of adjacent switches exceeds 300 volts.
5. Install single and double pole switches so that switch handle is up when switch is in the "On" position.

C. Receptacles:

1. Install Specification Grade receptacles, NEMA 5-15R, 15A, 125 V, 2P, 3W, for duplex receptacles and single receptacles unless otherwise shown on the drawings or specified.
2. Install receptacles with ground pole in the down position.

D. Wall Plates:

1. Install wall plates on all wiring devices in dry locations, with finish to match hardware in each area.
2. Install hospital wall plates on Type HG receptacles.
3. Install blank wall plates on outlet boxes which are for future equipment except telephone outlets.
4. Install 5/8 inch bushed wall plates on telephone outlets.
5. Fasten wall plates with vandal resistant screws in patients' area. Deliver 10 screw keys to the facility.
6. Fasten wall plates with vandal resistant screws in offices and public access areas. For all other locations pop rivet wall plates to the wiring devices. Deliver 10 screw keys to the facility.

E. Weatherproof Covers: Install weatherproof covers on wiring devices in damp and wet locations.

F. Nameplates: Provide phenolic or embossed aluminum nameplate for each special purpose receptacle indicating phase, ampere and voltage rating of the circuit. Attach nameplate with rivets or tamperproof fasteners to wall plate or to wall above receptacle. Wall plates may be engraved with required data in lieu of separate nameplates.

G. Mats: Where flush plates are required over outlet boxes that cannot be set deep enough for the plates to fit closely over the finished wall surfaces, provide oak mats to fill the space between the finished wall surface and the plate.

H. Receptacles On Emergency Circuits: Install red colored receptacles. Engrave faceplates "EMERGENCY" in 3/16 inch high lettering and fill engraving with contrasting color filler material.

END OF SECTION

SECTION 26 29 13 – ENCLOSED CONTROLLERS – IG/PC

PART 1 GENERAL

1.01 SUMMARY

A. Requirements for providing enclosed controllers. Enclosed controllers shall be provided in accordance with the requirements specified under this Section, the Specifications and the Contract Drawings.

1.02 PAYMENT

A. There is no separate payment provision for this Section.

1.03 RELATED SECTIONS

A. Requirements from the following Sections also apply to this Section:

1. Section 26 05 53 - Identification for Electrical Systems

1.04 REFERENCES

A. Definitions

1. Low-voltage as used in this Section and the Specifications shall mean all equipment, conductors, insulation systems and accessories intended for operation within the 600 Volt Class.

B. Reference Standards

1. NYCEC - Electrical Code of the City of New York.
2. UL 98 - Enclosed and Dead-Front Switches
3. UL 508 - Industrial Control Equipment
4. UL 489 - Molded-Case Circuit Breakers, Molded-Case Switches, and Circuit Breaker Enclosures.
5. NEMA KS-1 - Heavy Duty and Dead-Front Enclosed Switches
6. NEMA ICS - Industrial Control and Systems General Requirements
7. NEMA ICS 2 - Industrial Control and Systems, Controllers, Contactors and Overload Relays rated 600V.
8. NEMA ICS 5 - Industrial Control and Systems Control-Circuit and Pilot Devices
9. NEMA ICS 6 - Industrial Control and Systems Enclosures

1.05 DESCRIPTION

A. Not Used

1.06 QUALITY ASSURANCE

A. Unless otherwise shown on the Contract Drawings, or directed by the standards and codes referenced under this Section, the Contractor shall provide for each low-voltage motor or other power device, complete equipment for starting, stopping and control.

B. The starting, stopping and control equipment shall be provided with features of protection, current limitation, functioning and be complete with all accessories, appurtenances and supporting structures.

C. Control equipment shall be UL listed and properly designed with relation to the characteristics of operation of the motor and or device controlled.

D. Unless otherwise shown on the Contract Drawings or stated in the Specifications, each motor shall be provided with control equipment consisting of apparatus as follows:

1. Motors of 1/4 HP or less may, in the absence of other requirements, be controlled by a manual motor starter having thermal overload protection at all times.
2. Motors larger than 1/4 HP shall be controlled by a magnetic motor starter.
3. For wound rotor motors of all horsepower ratings, the primary and secondary shall be controlled by a magnetic motor starter or as shown on the Contract Drawings.
4. Multiple speed squirrel cage motors, shall be controlled by a magnetic motor starter. The magnetic motor starter shall provide adequate protection of the motor at each speed. A line establishing contactor shall be provided for each motor speed.

E. Each motor shall include overload protection based on latest standards.

1.07 SUBMITTALS

A. Shop Drawings

1. Contractor shall submit Shop Drawings and material specifications for the approval of the City. Submittals shall include, but not be limited to:

a. Manufacturer's catalog cuts, technical information and enclosure details for the enclosed controllers.

B. Operations and Maintenance Manuals

1. Operations and Maintenance Manuals

a. Operation and Maintenance Manuals shall be submitted in accordance with the Specifications.

1.08 DELIVERY, STORAGE, AND HANDLING

A. Enclosed controllers shall be delivered, stored and handled in accordance with the Specifications and the manufacturer's instructions

1.09 INCIDENTAL PARTS, SPECIAL TOOLS, AND SUPPLIES

A. The Contractor shall furnish and deliver to the City, at that part of the site and at such time as the City may direct, incidental parts for the enclosed controllers in accordance with this Section and the Specifications.

B. The incidental parts shall be listed in an index and packed in containers suitable for long term storage, bearing labels clearly designating the manufacturer's part number with complete information for use and reordering.

C. The following incidental parts shall be furnished:

1. One (1) set of contact tips, shunts and coils shall be provided for each 6 or less of each size motor starter.
2. One (1) auxiliary contact unit or one set of auxiliary contact tips shall be provided for each 6 or less motor starter.
3. Two (2) sets of arc chutes shall be provided for each type and rating of magnetic contactor.

4. One (1) timing relay shall be provided of each type installed as part of control equipment installation.
5. One (1) complete auxiliary relay shall be provided of each type installed as part of control equipment installation.
6. One (1) control transformer shall be provided of each rating and type installed as part of control equipment installation.
7. Two (2) complete sets of fuse replacements shall be provided of each rating and type installed as part of control equipment installation.

1.10 SPECIAL WARRANTY PROVISIONS / GUARANTEE PERIODS

A. Not Used

PART 2 PRODUCTS

2.01 MANUFACTURERS

A. Switching devices shall be as manufactured by:
   1. Cutler-Hammer, Melville, NY
   2. General Electric Company, Stamford, CT
   3. Siemens, Washington, DC
   4. Or approved equal.
B. Magnetic motor starters shall be as manufactured by:
   1. Cutler-Hammer, Melville, NY
   2. General Electric Company, Stamford, CT
   3. Siemens, Washington, DC
   4. Or approved equal
C. Manual motor starters shall be as manufactured by:
   1. Cutler-Hammer, Melville, NY
   2. General Electric Company, Stamford, CT
   3. Siemens, Washington, DC
   4. Or approved equal
D. Control stations shall be as manufactured by:
   1. Cutler-Hammer, Melville, NY
   2. General Electric Company, Stamford, CT
   3. Siemens, Washington, DC
   4. Or approved equal

2.02 MATERIALS / EQUIPMENT

A. Switching Devices

1. Switching devices shall be low-voltage devices provided in accordance with the details shown on the Contract Drawings. The switching devices required under this Section shall be the disconnect switch and circuit breaker types.
2. Switching devices shall be enclosed in NEMA type enclosures in accordance with the requirements specified under this Section, the Specifications and the Contract Drawings.
3. Switching device line and load terminals shall be provided with shields to prevent accidental contact with them. In addition, instrument probe holes shall be provided within the shields to permit investigation of the state of the terminals, by authorized personnel and approved procedures.
   a. Disconnect switch type switching devices shall be in accordance with the following:
      1) Switches shall be heavy duty type with number of poles, voltage and current ratings as shown on the Contract Drawings.
      2) Switches shall be capable of interrupting the full rated current at full rated voltage.
      3) Switch enclosure shall be provided with a viewing window through which it shall be permissible to observe the state of the main contacts and surge protective devices when provided.
      4) Where specifically shown on the Contract Drawings, disconnect switches shall be complete with fuses, surge protective devices and remote operation.
      5) Switches shall be the quick make and quick break type covered with an arc resisting barrier. The switch shall be provided with provision for locking in either open or closed position. The ratings shall be as follows:

Switch Rating in Amperes	Motor Horsepower	
	208-240 Volts	480Volts
60	Over 5 to 15	Over 5 to 30
100	Over 15 to 25	Over 30 to 60
200	Over 30 to 50	Over 60 to 125
400	Over 50 to 75	Over 125 to 200

   b. Circuit breaker type switching devices shall be in accordance with the following:
      1) Circuit breakers shall be the molded case type with number of poles, voltage and current ratings as shown on the Contract Drawings.
      2) Breakers shall be manually or remotely operated thermal magnetic or solid state type, including inverse-time overload and instantaneous short-circuit protection. Contacts shall be nonwelding silver alloy and arc extinction shall be accomplished by means of arc chutes.
      3) Breakers shall have 100 amp frames as a minimum. Overload protection shall be provided on all poles, with trip settings as shown on the Contract Drawings.
      4) Breakers with frame sizes 225 amp or larger shall have interchangeable trip units and adjustable magnetic trip elements.
      5) Breakers shall be operated by a toggle-type handle and shall have a quick-make/quick-break over-center switching mechanism that is mechanically trip-

free. Automatic tripping of the breaker shall be clearly indicated by the handle position.

6) Breaker enclosures shall be equipped with an external lockable handle with provision for locking in the closed or open position.

7) Where shown on the Contract Drawings breakers shall be provided with electronic trip units. Electronic trip units shall include long time, short time, instantaneous and ground fault settings as minimum.

8) Where specifically shown on the Contract Drawings breakers shall be provided with zone interlocking features, shunt trips, provisions for annunciation of status and auxiliary devices.

B. Motor Starters

1. Magnetic

1) Magnetic motor starters shall be provided complete with fused control power transformer, pilot devices, auxiliary contacts and accessories as shown on the Contract Drawings or stated in the Detailed Specifications.

2) Magnetic motor starters shall be enclosed in NEMA type enclosures in accordance with the requirements specified under this Section. The starter shall be combination type. The enclosure shall be equipped with an external operable, pad lockable handle, arranged so that it is impossible to open the door unless the breaker is open.

3) The starter shall be magnetic coil operated, and shall include a magnetic or solid state motor circuit protector with trip unit range adjustable from 700 to 1300 percent of full load.

4) The combination starters shall be suitable for interrupting the available low-voltage short circuit infeed at the line terminals of the enclosure.

5) Magnetic contactors shall be 3 pole, single throw, 60 Hz with auxiliary contacts for under-voltage protection. Contactors shall be mounted upon steel bases with insulated mountings or upon bases of insulating material. Contactors shall be provided with necessary barriers and arc chutes.

6) Contactors shall be NEMA rated as follows:

NEMA Size of Contactor	Motor Horsepower	
	208-240 Volts	480Volts
1	¼ to 71/2	¼ to 10
2	Over 71/2 to 10	Over 10 to 25
3	Over 15 to 25	Over 25 to 50
4	Over 30 to 40	Over 50 to 100
5	Over 70 to 75	Over 100 to 200

7) Contactors in Sizes 1 through 4 shall have double break, silver to silver main contacts. Contactors in Size 5 shall have silver plated tips which close with rolling action and which have self-aligning and self-cleaning features. Auxiliary and interlocking contacts for all sizes shall be of the silver button type. All contact tips shall be easily renewable. Flexible shunts shall be tinned copper braid or tinned extra flexible copper cable.

8) Overload relays shall be of the ambient temperature compensated bi-metallic or solid state type with interchangeable sensors and manual reset feature. Relay shall include a normally open auxiliary contact for remote alarm purposes. Sensors for overload relays shall be selected to match full load currents of the motors to allow motor operation at maximum safe loads without damage to equipment. Full load current data shall be obtained from nameplates of motors actually installed.

9) Pilot devices shall be heavy duty type, rated 10 amp continuous. Pushbuttons, selector switches, indicating lights, and other devices shall be located on the starter enclosure. Indicating lights shall be push-to-test, LED, transformer type with 12 volt secondaries.

10) Relays shall be standard, latching type and pneumatic or solid state time delay type. Relays shall be provided with contacts rated 10 amp with number as required.

11) Special overload protection shall be provided where definite purpose motors cannot be protected by standard thermal overload relay applications.

2. Manual

   a. Manual motor starters shall be provided complete with pilot devices as shown on the Contract Drawings.

   b. Manual motor starters shall be enclosed in NEMA type enclosures in accordance with the requirements specified under this Section.

   c. Manual motor starters shall be toggle operated, NEMA horsepower rated, single phase type with thermal overload protection unless shown otherwise on the Contract Drawings. Pilot devices when required shall be in accordance with the requirements specified under this Section.

   d. Where shown on the Contract Drawings, manual motor starters shall be low-voltage, three phase type without overload protection for use as manual starting disconnect switches. The switches shall be NEMA size 0 or 1 horsepower rated, as required for the application intended.

3. Control Stations

   a. Control Stations shall be provided in accordance with the details on the Contract Drawings.

   b. Control Stations shall be enclosed in NEMA type enclosures in accordance with the requirements specified under this Section.

   c. Control stations shall be industrial, heavy duty, oil tight construction with clearly marked legend plates. Stations shall have operating devices as shown on the Contract Drawings.

   d. Contact ratings shall be 10 amp minimum. All indicating lights shall be LED, transformer type, lens color shall be as shown on the Contract Drawings.

4. Enclosures

   a. Enclosures shall be provided for the enclosed controllers.

   b. Enclosures located indoors in dry, dusty areas shall be gasketed and shall be constructed of 14-gauge sheet steel.

   c. Cabinet type enclosures shall include hinged and gasketed front doors.

d. Enclosures shall be provided in accordance with NEMA requirements as required for the area classifications indicated on the Contract Drawings.

1) For dry, dusty locations, enclosures shall meet NEMA 12 requirements.

2) For wet and corrosive locations, enclosures shall meet NEMA 4X requirements. NEMA 4X enclosures shall be fabricated from 316 stainless steel.

3) Enclosures within hazardous locations shall meet Class 1, Division 1, Group D requirements. Hazardous enclosures shall be fabricated from cast metal.

2.03 FABRICATION / ASSEMBLING / FINISHES

A. Not Used

2.04 SOURCE QUALITY CONTROL / SHOP TESTS

A. Not Used

PART 3 EXECUTION

3.01 EXAMINATION / PREPARATION

A. Not Used

3.02 INSTALLATION

A. Equipment shall be mounted so that sufficient access and working space is provided for ready and safe operation and maintenance.

B. Equipment shall be securely fastened to walls or other surfaces on which they are mounted.

C. Independent supports shall be provided where no wall or other surface exists.

D. Enclosed controllers shall be installed in conformance with the NYCEC.

3.03 FIELD TESTING / QUALITY CONTROL

A. Not Used

3.04 STARTUP / DEMONSTRATION

A. Not Used

3.05 ADJUSTING / PROTECTION / CLEANUP

A. Not Used

END OF SECTION

No Text On This Page

SECTION 26 29 34 - SAFETY SWITCHES– IG/PC

PART 1 - GENERAL

1.1 SUBMITTALS

A. Product Data: Catalog sheets, specifications and installation instructions.

PART 2 - PRODUCTS

2.1 SWITCH DOORS

A. All doors must have side hinges, top lighting doors with only one (1) hatch will not be acceptable.

2.2 SAFETY SWITCHES (SINGLE THROW)

A. NEMA 1, 3R, 4, 12: Challenger's Heavy Duty Series, General Electric Co.'s Type TH, Square D Co.'s Heavy Duty Series, Westinghouse Electric Corp.'s H-600 or approved equal having:

1. Fuses, or unfused as indicated on drawings.
2. Fused switches equipped with fuseholders to accept only the fuses specified in Section 16416 (UL Class RK-1, RK-5, L).
3. NEMA 1 enclosure unless otherwise indicated on drawing.
4. 240V rating for 120V, 208V, or 240V, circuits.
5. 600V rating for 277V, or 480V circuits.
6. Solid neutral bus when neutral conductor is included with circuit.
7. Ground bus when equipment grounding conductor is included with circuit.
8. Current rating and number of poles as indicated on drawings.

B. NEMA 4X: Crouse-Hinds Co.'s NST, or Square D Co.'s Special Application Safety Switches or approved equal having:

1. Fuses, or unfused as indicated on drawings.
2. Fused switches equipped with fuseholders to accept only the fuses specified in Section 16416 (UL Class RK-1, RK-5, L).
3. Molded fiberglass-reinforced polyester NEMA 4X enclosure.
4. 240V rating for 120V, 208V, or 240V, circuits.
5. 600V rating for 277V, or 480V circuits.
6. Solid neutral bus when neutral conductor is included with circuit.
7. Ground bus when equipment grounding conductor is included with circuit.
8. Current rating and number of poles as indicated on drawings.

2.3 NAMEPLATES

A. General: Precision engrave letters and numbers with uniform margins, character size minimum 3/16 inch high.

1. Phenolic: Two color laminated engravers stock, 1/16 inch minimum thickness, machine engraved to expose inner core color (white).
2. Aluminum: Standard aluminum alloy plate stock, minimum .032 inches thick, engraved areas enamel filled or background enameled with natural aluminum engraved characters.
3. Materials for Outdoor Applications: As recommended by nameplate manufacturer to suit environmental conditions.

PART 3 - EXECUTION

3.1 INSTALLATION

A. Install switches so that the maximum height above the floor to the center of the operating handle does not exceed 6'-6".

B. Identify each safety switch, indicating purpose or load served:

1. NEMA 1 Enclosures: Rivet or bolt nameplate to the cover.
2. NEMA 12 Enclosures: Rivet or bolt and gasket nameplate to the cover.
3. NEMA 3R, 4, 4X Enclosures: Attach nameplate to the cover using adhesive specifically designed for the purpose, or mount nameplate on wall or other conspicuous location adjacent to switch. Do not penetrate enclosure with fasteners.

C. Paint switches used for the fire protective signaling system with red paint and identify - "FIRE ALARM CIRCUIT CONTROL".

END OF SECTION

SECTION 26 36 23 – AUTOMATIC TRANSFER SWITCHES – IG/PC

PART 1 GENERAL

1.01 SUMMARY

A. Requirements for providing low-voltage open transition Automatic Transfer Switches (ATSs) including Bypass-Isolation Switches.

1. The Contractor shall provide all labor, materials, equipment and incidentals, and is required to furnish and install ATSs including Bypass-Isolation Switches, complete and operational, as specified herein and as shown on the Contract Drawings.

2. Each ATS shall be provided in an enclosure.

1.02 PAYMENT

A. There is no separate payment provision for this Section.

1.03 RELATED SECTIONS

A. Section 26 05 11 – General Electrical Requirements

B. Section 26 05 27 – Grounding

C. Section 25 05 29 – Hangers and Supports for Electrical Systems

D. Section 26 05 53 – Identification for Electrical Systems

1.04 REFERENCES

A. Definitions

1. Low-voltage as used in this Section and the Specifications shall mean all equipment, conductors, insulation systems and accessories intended for operation within the 600 Volt Class.

2. All references to the Electric Utility or Utility shall mean ConEd or the Local Electric Utility having jurisdiction.

B. Reference Standards

C. The ATSs shall comply with the latest applicable provisions and recommendations of the following:

1. IEEE-446 - Recommended Practice for Emergency and Standby Power Systems for Industrial and Commercial Applications.

2. ISO 9001 - Quality management systems - Requirements.

3. NEMA ICS 10 Part 1 - Electromechanical AC Transfer Switch Equipment.

4. NEMA ICS 10 Part 4 - Guide to the Application of Low-Voltage Automatic Transfer Switch Equipment.

5. NFPA 110 - Emergency and Standby Power Systems

6. NYCEC - New York City Electrical Code.

7. UL 508 - Industrial Control Equipment.
8. UL 1008 - Transfer Switch Equipment.

1.05 DESCRIPTION

A. ATSs shall be rated for the voltage, ampacity and number of poles as shown on the Contract Drawings.

B. Switches shall have 600 volt insulation on all parts in accordance with NEMA standards.

C. The current rating shall be a continuous when the switch is installed in a non-ventilated enclosure, and shall conform to NEMA temperature rise standards.

D. ATSs shall be rated based on all classes of loads, resistive, tungsten, ballast and inductive loads.

E. ATs shall have a short circuit and withstand ratings as shown on the Contract Drawings and shall withstand the magnitude of fault current without welding of contacts.

F. ATSs shall include, but not be limited to the following:

1. ATS Mechanism permitting alternate connection to Source 1 or Source 2
2. Bypass-Isolation Switch permitting the complete isolation of the ATS mechanism from Source 1 or Source 2 and facilitating the continued powering of connected loads.
3. Control Panel
4. Enclosure

G. Source 1 and Source 2 shall be as shown on the Contract Drawings.

1.06 QUALITY ASSURANCE

A. ATSs shall comply with UL 1008 and NEMA ICS 10.

B. The ATS manufacturer shall use a shop test facility, for all factory tests, that has recently calibrated testing apparatus and qualified and experienced technicians.

1. Calibration of testing apparatus shall be within one year.

C. The ATSs shall be field tested.

1. Field testing shall be performed in accordance with the requirements specified under this Section.

D. The services of the ATS manufacturer shall be retained for field service.

1. Field service shall be in accordance with the requirements specified under this Section.

1.07 SUBMITTALS

A. Contractor shall submit Shop Drawings and material specifications for the approval by the Engineer.

B. Submittals shall include, but not be limited to:

1. The proposed manufacturer along with the location of its closest service facility from which the ATSs shall be serviced and location of closest parts inventory.
2. Manufacturer’s catalog cuts and technical information required to demonstrate compliance with the specific requirements.
3. A completed materials list showing all items proposed for use.

4. Control and wiring diagrams
5. Construction details of enclosures.
6. Description of shop and field testing methods, procedures and apparatus with calibration dates.
    a. Testing methods and procedures shall be submitted at least 60 days in advance prior to confirmation of witness testing dates and actual testing.
7. Qualifications of proposed testing firm to perform acceptance testing.
    a. Submit firm experience records and five (5) recent references with phone numbers, at least 60 days in advance to actual testing.

C. Certificate of Compliance:
1. Seismic qualification certification from the manufacturer including mounting recommendations.
2. Data and results of witness tests accompanied by a certificate of authenticity sworn to before a notary public by an officer of the manufacturing company.

D. Reports:
1. Shop test and field test reports.
2. Manufacturer's site visit and acceptance testing reports.

E. Operation and Maintenance (O&M) Manuals

1.08 DELIVERY, STORAGE, AND HANDLING

A. Deliver ATSs to ensure uninterrupted progress of the work.

B. Releases of ATSs for shipment shall occur only upon approval of data and results of witness test reports.

C. Ship, handle and protect ATSs in accordance with the Specifications.

1.09 INCIDENTAL PARTS, SPECIAL TOOLS, AND SUPPLIES

A. The Contractor shall furnish and deliver to the Engineer, at that part of the site and at such time as the Engineer may direct, incidental parts for ATSs.

B. The incidental parts shall be listed in an index and packed in containers suitable for long term storage, bearing labels clearly designating the manufacturer's part number with complete information for use and reordering.

C. Incidental parts shall be as recommended by the manufacturer.

1.10 SPECIAL WARRANTY PROVISIONS / GUARANTEE PERIODS

A. Not Used

PART 2 PRODUCTS

2.01 MANUFACTURERS

A. ATSs shall be as manufactured by:
1. ASCO

2. Russelectric, Hingham
3. Schneider Electric
4. Or approved equal

2.02 MATERIALS / EQUIPMENT

A. Power section:

1. The ATSs shall be an open transition switch of double throw construction whose operation in either direction shall be initiated by a reliable electrical mechanism that is momentarily energized and the switch mechanically held in its required position.
2. Designs are not acceptable, that utilize components of molded-case breakers, contactors or parts thereof and which are not intended for continuous duty, repetitive switching or transfer between Source No. 1 and Source No. 2.
3. There shall be a direct mechanical coupling of Source 1 No. and Source No. 2 mechanisms to facilitate transfer switch operation in three cycles or less.
4. The Source No. 1 and Source No. 2 contacts shall be mechanically interlocked such that failure of any coil or disarrangement of any part shall not permit a neutral position or connection of both sources to the common load connection.
5. The mechanical interlocking shall be such that the switch is unaffected by momentary outages so that contact pressure is maintained at a constant value and temperature rise at the contacts is minimized for maximum reliability and operating life.
6. The ATSs shall have sufficient arc interrupting capabilities for 60 cycles of operation between Source No. 1 and Source No. 2, which are 120 degrees out of phase at rated voltage, 600% of rated current at 0.50 power factor to ensure that there will be no current flow between the two isolated sources during switching.
7. The contact structure shall consist of a main current carrying silver alloy contact, with a minimum of 50% silver content.
8. The current carrying contacts shall be protected by silver tungsten arcing contacts on all sizes.
9. Inspection of all switch components shall be possible from the front of the switch without the disassembly of operating linkages and without the disconnection of power conductors.
10. Maintenance of all switch components shall also be possible from the front of the switch with access to all components.
11. A manual handle shall be provided for maintenance purposes. The handle shall permit an operator to manually stop the contacts at any point throughout their entire travel to inspect and service the contacts when required.
12. For ATSs installed in systems having ground fault protective devices, and wired so as to be designated as a separately derived system by the NYCEC, a 4th pole shall be provided. This additional pole shall isolate the Source No. 1 and Source No. 2 neutrals.
13. The neutral pole shall have the same withstand and operational ratings as the other poles and shall be arranged to break last and make first to minimize neutral switching transients.

a. Add-on or accessory poles that are not of identical construction and withstand capability of the phase poles are not acceptable.

14. The transfer switches shall have a minimum short circuit withstand rating as shown on the Contract Drawings or as required by short circuit studies but not less than 65 kA symmetrical.

B. Bypass-Isolation Switch

1. A double-throw bypass-isolation switch shall provide manual bypass of the load from either source and permit isolation of the automatic transfer switch from all sources and load power conductors. All main contacts shall be manually driven.

2. Separate bypass and isolation handles shall be utilized to provide clear distinction between the functions. Handles shall be permanently affixed and operable without opening the enclosure door.

3. Bypass to the load-carrying source shall be accomplished with no interruption of power to the load (make before break contacts).

   a. The bypass handle shall have three operating modes: "Bypass to Source 1," "Automatic," and "Bypass to Source 2."

   b. The operating speed of the bypass contacts shall be the same as the associated transfer switch and shall be independent of the speed at which the manual handle is operated.

   c. In the "Automatic" mode, the bypass contacts shall be out of the power circuit so that they will not be subjected to fault currents to which the system may be subjected.

4. The isolation handle shall provide three operating modes: "Closed," "Test," and "Open."

   a. The "Test" mode shall permit testing of the entire emergency power system, including the automatic transfer switches with no interruption of power to the load.

   b. The "Open" mode shall completely isolate the automatic transfer switch from all source and load power conductors. When in the "Open" mode, it shall be possible to completely withdraw the automatic transfer switch for inspection or maintenance to conform to code requirements without removal of power conductors or the use of any tools.

5. When the isolation switch is in the "Test" or "Open" mode, the bypass switch shall function as a manual transfer switch.

C. Controls:

1. Solid State Control System

   a. The control system for the ATS shall be solid state based and shall also contain all logic devices including control, voltage sensing, time delays and any auxiliary equipment required for to properly implement the functions detailed under this Section.

   b. Control system shall have a programmable microprocessor controller with keypad and LCD display.

2. The panel shall be shielded and door mounted on the inside door of the switch enclosure.

3. All components shall be connected with a numbered wiring harness equipped with a disconnect plug that allows isolation of the control panel.
4. The solid state panel controls shall include adjustable three phase under voltage setting on each of the two sources to provide the following sequence of operation:
   a. When the voltage of any phase of Source No. 1 is reduced to 80 percent of nominal voltage for a period of 1 second (fixed), the transfer switch shall be signaled to transfer to Source No. 2, after an adjustable time delay (0 -30 seconds).
   b. The transfer switch shall remain in the Source No. 2 position indefinitely. Should any phase of the Source No. 2 source be reduced to less than 80 percent of nominal voltage for a period of 1 second (fixed), the transfer switch shall be signaled to transfer to Source No. 1, after an adjustable time delay (0 -30 seconds), if the Source No. 1 is available for operation.
   c. The option of automatic transfer from Source No. 2 to Source No.1, as soon as Source No. 1 is available for operation shall also be provided
5. The transfer switches shall contain red indicating lights. The lights shall indicate switch position. The indicating lights shall be push-to-test, heavy-duty transformer LED type. Indicating light voltage shall be 12 Volts.
6. All relays shall be continuous duty industrial type with wiping contacts. Customer interface contacts shall be rated 10 amperes minimum. Coils, relays, timers and accessories shall be readily front accessible.
7. The transfer switches shall contain door mounted transfer/re-transfer pushbuttons. It shall allow an operator to switch from Source No.1 to Source No.2 and from Source No.2 to Source No.1. Transfer between sources shall be immediate.
8. The ATSs shall have all necessary accessories as required to transmit the status and alarm signals to a designated overall System Control Panel remote from the ATS.

D. Auxiliary Power
   1. Provisions for an external control power source to power the control panel when both sources are not available.
   2. The takeoffs for external power sources shall be as shown on the Contract Drawings.

E. Enclosure:
   1. The entire ATS shall be completely assembled within one enclosure. The enclosure shall be NEMA 12, painted gray, ANSI 61.
   2. Terminal blocks shall be provided within the switch enclosure facilitate the connection of off enclosure signals and auxiliary power provisions.
      a. Twenty percent incidental terminals, two minimum, shall be provided.
      b. Terminals shall be lettered or numbered to conform to the wiring diagrams.
   3. The wires within automatic transfer switch shall be neatly harnessed to prevent the door damaging the wires and to prevent the wires hampering the door operation. All wires shall have identification markers on each end.
   4. The enclosure shall be provided with a thermostatically controlled strip heater to keep humidity and temperature within acceptable levels.

5. The enclosure shall have identifying nameplates in accordance with the requirements of Section 26 05 63 - Labeling and Identification.

2.03 FABRICATION / ASSEMBLING / FINISHES

A. Painting

1. The enclosure shall be painted gray, ANSI 61.

2.04 SOURCE QUALITY CONTROL / SHOP TESTS

A. Certified Shop Tests:

1. Shop testing shall be performed on the ATSs at the manufacturer's plant prior to shipment.
2. Shop tests shall demonstrate that the equipment conforms to the requirements specified.
3. The tests shall include the manufacturer's standard tests and the following at a minimum.
   a. Operational tests to ensure proper operation of the components and sequence of operation.
   b. High potential test in accordance with NEMA standard.
4. The Contractor shall provide a shop test report. The report shall identify the tests performed and the results obtained.

B. Witness Shop Tests:

1. The Contractor shall perform witnessed shop tests in accordance with the Specifications and this Section.
2. Witnessed Shop Test shall at a minimum repeat all of the Certified Tests in the presence of the Witnesses.
3. The Contractor shall provide a witnessed shop test report. The report shall identify the tests performed and the results obtained.

PART 3 EXECUTION

3.01 EXAMINATION / PREPARATION

A. Not Used

3.02 INSTALLATION

A. ATSs shall be installed in accordance with the Specifications this Section and the manufacturer's instruction and recommendations.

B. ATSs shall be fully assembled with all required devices, wiring, nameplates, terminal blocks and enclosures.

C. ATSs shall be rigidly and securely mounted to the building structure or to supporting devices, which are rigidly and securely supported to the building structure.

D. ATSs shall be installed with sides parallel or perpendicular to walls or equipment, in a neat and professional manner.

E. ATSs shall be installed such that door swing is not hampered.

F. ATSs shall be securely fastened in position with bolts and expansion shields on concrete or brick, with toggle bolts on hollow masonry units, and with machine screws or welded studs on steel work.

G. ATSs shall be grounded in accordance with NYCEC requirements.

H. Install nameplates for identification of equipment.

3.03 FIELD TESTING / QUALITY CONTROL

A. Field Tests

1. After installation, ATSs shall be field tested for operation and conformance in presence of the Engineer.

2. The Contractor shall perform field testing in accordance with the Specifications, and as described in this Section.

3. ATS testing shall be performed by the manufacturer's representative, prior to energizing equipment. The testing shall be in accordance with the recommendations of the manufacturer and shall include the following at a minimum.

a. Mechanical and electrical components shall be inspected.

b. The switches shall be sequence operated to verify proper operation.

B. Manufacturer's Field Services

1. A qualified manufacturer's representative shall check the ATSs before it is placed into operation, assist in the performance of field tests, observe and assist initial operations and train the plant operations and maintenance staff in the care, operation and maintenance of the ATSs.

2. The Contractor shall provide equipment start-up services and training in accordance with the Specifications.

3. The Contractor shall provide a field report from the manufacturer's representative for each visit to the Site.

a. The report shall include complete information on time, schedule, tasks performed, persons contacted, problems corrected, tests results, training, instruction and all other pertinent information.

4. The service representative shall sign in and sign out with the Engineer on each day they are at the site.

3.04 STARTUP / DEMONSTRATION

A. Not Used

3.05 ADJUSTING / PROTECTION / CLEANUP

A. Not Used

END OF SECTION

SECTION 26 36 50 – GENERATOR CONNECTION CABINET – IG/PC

PART 1 - GENERAL

1.01 Scope:

A. Contractor must furnish, deliver, install and test the generator tap connection boxes as specified herein and in accordance with the drawings.

1.02 Quality Assurance:

A. Generator tap connection boxes must be UL listed and labeled under the UL 1008 standard, with a minimum 22KA withstand rating.

B. Generator tap connection box manufacturer must provide a complete factory assembled and tested generator tap box.

C. Generator tap connection box manufacturer must submit UL 1008 certification of authenticity.

1.03 Submittals:

A. Contractor must submit manufacturer's drawings and data of generator tap boxes for Engineer's approval, prior to start of enclosure fabrication. Drawings and data must include, as a minimum:

- Dimensioned general arrangement drawings (AutoCAD format)
- UL listing information, including UL control or file number
- Component and nameplate data
- Bill of Material
- Enclosure & Frame Mounting provisions & rough in dimensions
- Conduit entry locations
- Installation instructions.

1.04 Warranty:

A. Generator tap connection boxes must be covered by manufacturer's warranty for one year after Substantial Completion.

PART 2 – PRODUCTS

2.01 General:

A. All equipment must be new.

B. Generator tap connection box manufacturer must have produced and sold UL 1008 Listed generator tap boxes as a standard product, for a minimum of (3) years prior to order.

C. Contractor must be responsible for the equipment until it has been installed and is finally inspected, tested and accepted, in accordance with the requirements of the Project Specifications.

D. Generator tap connection boxes must be UL Listed, Flush, Generator Tap Connection Boxes, as manufactured by:

1. Berthold Electric Company
2. ESL Power Systems, Inc.
3. Schnieder - Square D
4. Or approved Equal

2.02 Generator Tap Boxes:

A. Generator inlet tap boxes must consist of cam-style, male, 200 amp rated bulkhead mount connectors and grounding terminals, all housed within a factory fabricated, Flush, 316 Stainless Steel, padlockable enclosure.

B. Number of male input cam connectors must not exceed the number as shown on the drawings and must be rated for the specified bus amperage.

C. Generator inlet tap box enclosure must be: Type 3R, constructed of continuous seam-welded, 316 Stainless Steel. The main access must be through a hinged door that extends the full height of the enclosure. Access for portable generator cables equipped with matching female cam-style plugs must be via locking flush, continuous SST hinged door for in wall mount.

D. Cam-style male connectors (inlets) must be UL Listed, single-pole, phase identified, separable type and rated: 200 amps at 600 VAC. Cam-style male connectors must be color coded. Cam-style male connectors must be provided for each phase and for equipment ground (green), male Cam-style connectors must also be provided for neutral (white). The cam-style, green, male ground connector must be bonded to the enclosure. A 2-hole NEMA compression (crimp type) ground lug must be provided for connection of the facility side ground equipment grounding conductor. None of the cam-style male connectors must be accessible unless the lockable, main access door is open. Male connectors must be equipped with spring loaded dust covers.

A permanently fastened, lamacoid, engraved nameplate must be provided within the flush Cam-type enclosure to note the next upstream device (Supplies: ATS (ID) - Emergency Source), the building service characteristics (3 phase, 4 wire, 208 volt, 200 amp size), the verified Utility Phase sequence (A, B, C or C, B, A) and the verified premises' Phase (load) Rotation (CCW or CW).

PART 3 – EXECUTION

3.01 Installation:

A. Prior to installation of generator inlet connection boxes, Contractor must examine the areas of work and local conditions under which the generator inlet tap box is to be installed and notify the Engineer in writing if any unsatisfactory conditions exist.

B. Generator inlet connection boxes must be installed as shown on the drawings and per the manufacturer's written instructions. The installation must meet the latest published requirements of the NFPA 70 National Electrical Code (NEC), including NYC amendments to the NEC, the manufacturer's installation requirements and the National Electrical Contractors Association's "Standard of Installation".

C. Contractor must furnish and install UL Listed, watertight, Hot Dip Galvanized, conduit hubs, as manufactured by MYERS , T & B or approved equal, for each conduit entry of the generator tap connection enclosure. The conduit hub size must match the conduit size for conductors and equipment grounds as shown on the approved layout shop drawings.

Hubs must be properly installed and tightened to maintain watertight integrity of the generator tap connection enclosure.

D. Contractor must terminate conductors and equipment ground conductors per the manufacturer's instructions. All field wiring terminations, within the generator tap connection enclosure, must be compression type, copper and be field torqued to stated values and as per the instructions on the generator tap connection cabinet documents.

3.02 Field Testing:

A. Prior to first energizing each generator tap connection unit, the Contractor must perform the following checks and tests, as a minimum:

1. Verify mounting and all connections are complete, identified, and secure.
2. Verify internal components and wiring are torque checked, color coded and secure.
3. Perform end to end continuity checks of all circuits.
4. Perform 1,000 VDC megger test, on each phase and equipment ground cables.
5. Verify dead front trim is secure.

B. Confirm operation of the generator inlet tap cabinet Cam-style equipment ground receptacle by attaching a plug to the generator tap box ground receptacle and then verify that the Cam-style plug is effectively grounded to the facility equipment ground. Ground resistance shall be documented to not exceed 2 ohms.

C. Confirm the operation of each Cam-style bulkhead (male) connector – spring loaded dust cover

D. Confirm the operation and fitment of the Cam-Style male connector (inlets) for each phase (A,B,C) and Neutral (N)

E. Confirm the gender, connections, sizes and pin engagement for each Phase, Neutral & Ground at the bulkhead tap box inlet and at the owner's portable generator leads, if available at the time of acceptance testing.

END OF SECTION

No Text On This Page

SECTION 26 41 13 – LIGHTNING PROTECTION FOR STRUCTURES – IG/PC

PART 1 GENERAL

1.01 SUMMARY

A. Requirements for providing lightning protection of structures.

B. Lightning Protection Systems (LPS) for structures or buildings shall be provided in accordance with the requirements specified under this Section, the Specifications and the Contract Drawings.

C. The Contractor shall retain the services of a Certified LPS Installer.

D. The Certified LPS Installer shall furnish all labor, materials, equipment, services and incidentals necessary for the installation of a functional and complete LPS as specified herein.

1.02 PAYMENT

A. There is no separate payment provision for this Section.

1.03 RELATED SECTIONS

B. Section 26 05 53 - Identification for Electrical Circuits

C. Section 25 05 27 - Grounding

D. Section 26 23 23 - Low-voltage Switchgear

E. Section 26 24 16 - Panelboards

F. Section 26 43 13 - Low-Voltage Surge Protective Devices.

1.04 REFERENCES

A. Definitions

1. Certified LPS Installer is a UL Master Labelled Certified Lightning Protection System Installer or Lightning Protection Institute Certified Installer

2. Certificate of Inspection where used in this Section shall mean UL Lightning Protection Master Label Certificate.

3. Letter of Findings where used in this Section shall mean an official UL report detailing inspection of a LPS with intentional noncompliance due to construction or limitations of scope outlined by the installer that render an LPS ineligible for a UL Lightning Protection Master Label Certificate.

4. Low-voltage as used in this Section and the Specifications shall mean all equipment, conductors, insulation systems and accessories intended for operation within the 600 Volt Class.

5. All references to the AHJ (Authority Having Jurisdiction) shall mean the NYC Electrical Code

6. All references to the Electric Utility or Utility shall mean Consolidated Edison Company or the Local Electric Utility having jurisdiction.

7. LPI – Lightning Protection Institute.

B. Reference Standards

1. LPI 175 - Standard for the Design-Installation-Inspection of Lightning Protection Systems.
2. NFPA 780 - Standard for the Installation of Lightning Protection Systems
3. NYCEC - New York City Electrical Code.
4. UL96 - Standard for Lightning Components.
5. UL 96A - Standard for Installation Requirements for Lightning Protection Systems.
6. UL 467 - Grounding and Bonding Equipment
7. UL 651 - Schedule 40, 80, Type EG and A Rigid PVC Conduit and Fittings.
8. UL LPS Guide - UL Marking and Application Guide – Lightning Protection.
9. ANSI/IEEE 141 - Recommended Practice for Electric Power Distribution for Industrial Plants.
10. IEEE 1100 - Recommended Practice for Powering and Grounding Electronic Equipment.

1.05 DESCRIPTION

A. Not Used

1.06 QUALITY ASSURANCE

A. Installer

1. The LPS Installer shall be a Certified LPS Installer.
2. Provide proof of the certification, or demonstrate that the standards and experience required for certification are possessed, all to the satisfaction of the Engineer.

B. Materials

1. All materials shall be new and shall comply in weight, size and composition as required by UL 96A and NFPA 780 and for the structures or building to be protected.
2. Class I materials shall be used for systems on structures not exceeding 75 feet in height.
3. Class II materials shall be used for systems on structures exceeding 75 feet above grade.
4. All materials used in the installation shall be labeled or listed by UL for use in LPSs
5. All materials shall be of copper and high copper-content bronze castings or stainless steel.
6. LPS materials shall be selected to ensure that electrolytic or galvanic action does not occur at the contact points or surfaces.
7. Where dissimilar metals are in contact care must be taken to ensure that bimetallic connecting accessories are used and permit only similar metals to be in contact.

C. Certification of the Installation

1. The Engineer shall be given 96 hours notice of the intent to cover or conceal all parts of the LPS which will not be visible after completion and turn over of the installation.
2. The completed system shall be in accordance with UL 96A and NFPA 780 or LPI 175 but not both.
3. A Certificate of Inspection shall be provided for the completed LPS.

1.07 SUBMITTALS

A. Contractor shall submit Shop Drawings and material specifications for the approval of the Engineer.

B. Submittals shall include, but not be limited to:

1. Qualifications of proposed Certified LPS Installer.
   a. Submit experience records at least 45 days in advance to equipment submittals.
   b. Five recent references with phone numbers shall be submitted.
2. Manufacturer's catalog cuts and technical information for the LPS materials proposed for use in this Contract.
   a. Submittals shall demonstrate the mechanism that will be used to isolate dissimilar materials.
3. Scaled Shop Drawings showing proposed routing and layout of the LPS with installation details. Drawings shall include the stamp of the Certified Installer-Designer responsible for the system design.
4. Photographic and video documentation to show how the LPSs were installed in-ground and all concealed portions of the installation.

C. Certificates of Compliance:

1. Certificate of Inspection or Letter of Finding shall be submitted.

1.08 DELIVERY, STORAGE, AND HANDLING

A. Lightning protection system materials shall be delivered, stored and handled in accordance with the manufacture's recommendations and this Section.

1.09 INCIDENTAL PARTS, SPECIAL TOOLS, AND SUPPLIES

A. Not Used

1.10 SPECIAL WARRANTY PROVISIONS / GUARANTEE PERIODS

A. Not Used

PART 2 PRODUCTS

2.01 MANUFACTURERS

A. The lightning protection system shall be as manufactured by:

1. Heary Brothers Lightning Protection Company
2. Thompson Lightning Protection Company
3. East Coast Lightning Equipment

4. Pentair Erico, Solon
5. Or approved equal.

B. Non-metallic conduit and fittings shall be by as manufactured by:

1. Carlon (Thomas & Betts)
2. Cantex Inc
3. Southwie
4. Or approved equal.

C. Not Used

2.02 MATERIALS / EQUIPMENT

A. All materials used in the installation shall be new and shall comply in weight, size and composition as required by UL 96A and NFPA 780

B. All lightning protection system fittings shall be heavy duty type.

C. All bolts, screws and hardware shall be stainless steel.

D. Air Terminals and Accessories

1. Air Terminals shall be not less than 18 inches long, not less than 5/8-inch in diameter and may be manufactured in separate parts if longer than 10 inches.
2. Air terminals shall include a cast bronze point protector, stainless steel adapter and copper base.
3. Air terminals shall be provided with an integral base support, or shall have not less than five full threads of engagement with a separate attachment base mounted to the structure.
4. If the Air terminal has internal threads the wall thickness shall be not less than 1/16 inch at the base of the threads.
5. Air Terminals longer than 24 inches shall have bracing at half its height and listed for the purpose
6. Air terminal bases are permitted to be stamped or cast construction.
   a. Copper bases shall 0.061 minimum for copper material. If cast either copper or aluminum shall be at least 3/32 inches thick.
   b. Air terminal base support must incorporate a connector fitting for connection of the lightning conductor.
      1) The conductor contact area must be at least 1-1/2 inches on all sides of the cable

E. Conductors

1. Class I
   a. Main conductors shall be stranded copper conductors and shall be at least 57,400 circular mils at 187 lbs per 1000 ft.
   b. Secondary or bonding conductors minimum size shall be 26,240 cir. mils for copper.

2. Class II
    a. Main conductors; shall be not less than 115,000 cir. mils for copper conductor at 375 lbs per 1000 ft.
    b. Secondary or bonding conductors minimum size shall be 26,240 cir. mils for copper.

F. Grounding Electrodes
1. Ground rod electrodes shall be copper-clad steel, a minimum 5/8” diameter and 10 feet long.
2. Ground rods shall conform to the requirements of Section 26 05 27 - Grounding.

G. Ground Cables:
1. Ground cables shall be copper or aluminum where necessary to prevent dissimilar metal reaction.
2. Ground cable stranding, number and size shall be suitable for the classification of the structure to be protected.
3. All ground cable where exposed shall be corrosion resistant.

H. Non-metallic conduit shall be schedule 80 PVC plastic, 90 degrees C rated, conforming to UL No. 651.

I. Non-metallic fittings shall be of same material and manufacturer as base conduit. Cement shall be provided for joining fittings to the conduit and shall be the same manufacturer as the base conduit.

2.03 FABRICATION / ASSEMBLING / FINISHES

A. Not Used

2.04 SOURCE QUALITY CONTROL / SHOP TESTS

A. Not Used.

PART 3 EXECUTION

3.01 EXAMINATION / PREPARATION

A. Not Used

3.02 INSTALLATION

A. Air Terminals and Air Terminal Accessories
1. Air terminals shall extend a minimum of ten inches above the object or area they are to protect.
2. Air terminals shall be located at intervals not exceeding 20’-0” along ridges of pitched roofs and along the perimeter of flat or gently sloping roofs (flat or gently sloping roofs include roofs that have a pitch less than 3:12).
3. Flat or gently sloping roofs exceeding 50’-0” in width shall be provided with additional air terminals located at intervals not exceeding 50’.
4. Air terminals shall be located within two feet of the ends of ridges, roof edges and outside corners of protected areas.

5. Air terminals shall be installed on stacks, flues, mechanical units and other objects not located within a zone of protection.
6. Permanent metal objects on the structure having an exposed metal thickness 3/16” or greater may be substituted for air terminals and shall connected to the lightning protection system as required by the specified standards using main size conductor and bonding plates having a minimum of 3 square inches of surface contact area.
7. Air terminal bases shall be securely fastened to the structure in accordance with the specified standards.
    a. Fasteners may include stainless steel screws, bolts, nails or anchors.
    b. Adhesives shall only be used to complete other types of fasteners and shall be compatible with the fastener and structure material
    c. Any protective sheets or pads that may be required by the roofing system manufacturer shall be furnished and installed by the Contractor.
8. Air terminal spacing exceeding these dimensions, shall be permitted so long as the area protected lies within a zone of protection.
9. Air terminals shall be installed for stacks, flues, mechanical equipment, and other objects, having a metal thickness of less than 3/16 of an inch, and not located within a zone of protection.
    a. Permanent metal objects having a metal thickness 3/16 of an inch or greater shall be connected to the LPS in lieu Air Terminals by main size conductors and bonding plates having a minimum of 3 square inches of surface contact area.
10. Flat or gently sloping roofs exceeding 50 feet in width, shall be protected with additional air terminals located at intervals not exceeding 50 feet in the flat or gently sloping area.

B. Conductors and Accessories
1. Conductors shall provide a two way, horizontal or downward path from each strike or air terminal to connections to the lightning protection ground electrode system.
2. Down conductors shall be sized as Class I or Class II materials in accordance with the specified standards.
    a. Down conductors where required as shown on the Contract Drawings shall be concealed in the exterior wall construction.
    b. Class II conductors from a higher portion of a structure shall continue to connections to the lightning protection ground electrode system.
    c. Down conductors shall be spaced at intervals averaging not more than 100 feet around the perimeter of the structure.
    d. In no case shall a structure have fewer than two down conductors.
    e. Where down conductors are installed exposed on the exterior of a structure and are subject to physical damage or displacement, guards shall be used to protect the conductor a minimum of 6 feet above grade.
    f. Metallic guards shall be bonded at each end.

3. In the case of structural steel frame construction, down conductors may be omitted and roof conductors shall be connected to the structural steel frame at intervals averaging not more than 100 feet around the perimeter of the structure.
    a. Connections to the steel frame shall be made with bonding plates having area of a minimum of 8 square inches.
4. Conductors shall be installed free of excessive splices and sharp bends.
5. Conductor bends shall form an included angle of not less than 90 degrees nor have a radius of bend of less than 8 inches.
6. Conductors shall be secured to the structure at intervals not exceeding 3 feet.
    a. Fasteners shall be of the same material or of a material equally resistant to corrosion as that of the conductor.
    b. Any protective sheets or pads that may be required by the roofing system shall be furnished and installed by the Contractor.
7. Connector fittings shall be listed for the purpose and of the same material as the conductor or of electrolytically compatible materials.

C. Ground Electrodes and Accessories

1. Each down conductor shall terminate at a ground electrode dedicated to the LPS, or to a building or facility ground electrode system that consists of multiple ground electrodes that are interconnected with a ground ring conductor.
2. The down conductor shall be connected to the ground electrode by as exothermically welded connection.
3. Ground rod electrodes shall be located a minimum of 2 feet below grade and shall be installed below the frost line where possible (excluding shallow topsoil conditions).
4. Where it is not possible to drive ground rod electrodes because of bedrock or shallow topsoil conditions, ground plate electrodes, radial electrodes, ground ring electrodes, concrete- encased electrodes, or combinations of these may be used in accordance with NFPA 780.
5. Where the structural steel framework is utilized as down conductors for the system, ground electrodes shall be connected to columns around the perimeter of the structure at intervals averaging not more than 60 feet apart.
    a. The grounding connection at the columns shall be made using either bonding plates having 8 square inches of surface contact area or by exothermically welded connections.

D. Common Bonding of Grounded Systems

1. Common bonding of all grounded systems within the building shall be ensured by interconnecting them to the LPS using main size conductor and fittings.
2. For structures exceeding 60 feet in height, the interconnection of the LPS ground electrodes and other grounded systems shall be in the form of a ground loop conductor.
3. These grounded systems to be interconnected shall include but are not limited to the electrical service, communication, and antenna system grounds as well as all

underground metallic piping systems including water, gas, sewer, underground metallic conduits, etc.

4. Interconnection to service lines or conduits shall be made on the customer's side of the meter.
5. Ground Electrodes in test wells shall be bonded to the ground system by a bronze ground rod clamp having at least 1-1/2 inches of contact between the rod and the conductor, measured parallel to the axis of the rod.
6. The system shall be installed with common grounding by interconnecting ground mediums entering the building using main size conductors and fittings. Grounded metal bodies shall be bonded to the system using bonding connections and fittings. Ground conductors where installed in conduit, shall be non - metallic type.

E. Potential Equalization

1. Grounded metal bodies located within the required bonding distance as determined by the bonding distance formula in NFPA780 shall be bonded to the LPS using the required bonding conductors and connections.

F. Roof Penetrations

1. Roof penetrations required for down conductors or for connection to structural steel framework shall be made using thru-roof assemblies with solid riser bars or conduits and appropriate roof flashing.
2. Conductors shall not pass directly through the roof.
   a. The Contractor shall furnish and install the materials required to properly seal all roof penetrations of the LPS components and any additional roofing materials or preparations required by the roofing manufacturer for lightning conductor runs to assure compatibility with the warranty for the roof including roof pads that may be required to protect the roof under each of the lightning protection components.

G. Surge Protective Devices (SPD)

1. SPDs shall be provided at all power services entrances and at entrances of conductive signal and data communication devices.
2. SPDs shall comply with Section 26 43 13 – Low-Voltage Surge Protective Devices.

H. Not Used

3.03 FIELD TESTING / QUALITY CONTROL

A. The Contractor shall have the lighting protection manufacturers representative or inspector perform field inspection of the lightning protection system at several stages during the installation in accordance with LPI requirements.

B. Upon completion of the lightning protection system the Contractor shall arrange for a final inspection of the system. The final inspection shall be performed by the master installer or inspector in accordance with LPI requirements.

C. Not Used

3.04 STARTUP / DEMONSTRATION

A. Not Used

3.05 ADJUSTING / PROTECTION / CLEANUP

A. Not Used

END OF SECTION

No Text On This Page

SECTION 26 51 11 – LIGHTING FIXTURES, DEVICES AND SCHEDULES – IG/PC

PART 1 GENERAL

1.01 SUMMARY

A. Requirements for providing lighting fixtures (luminaires) and devices. Luminaires and devices shall be provided in accordance with the requirements specified under this Section, the Specifications and the Contract Drawings.

B. The lighting system shall be complete and include all equipment, devices and accessories as required for the installation of the luminaires and devices.

C. The following index of this Section is presented for convenience:

1.02 PAYMENT

A. There is no separate payment provision for this Section.

1.03 RELATED SECTIONS

A. Section 26 05 27 - Grounding

B. Section 26 05 29 - Hangers and Supports for Electrical Systems

C. Section 26 05 33 - Raceways and Boxes for Electrical Systems

D. Section 26 05 53 - Identification for Electrical Systems

1.04 REFERENCES

A. Definitions

1. Not used

B. Reference Standards

Luminaires and devices shall comply with the latest applicable provisions and recommendations of the following even if not specifically listed in this Section:

1. ANSI C78.377 - Specifications for the Chromaticity of Solid State Lighting (SSL) Products
2. DLC PR - DesignLights Consortium Premium Technical Requirements
3. EISA 2007 - Energy Independence and Security Act of 2007
4. IES LM-79 - Approved Method: Electrical and Photometric Measurements of Sold State Lighting Products
5. IES LM-80 - Approved Method: Measuring Luminous Flux and Color Maintenance of LED Packages, Arrays and Modules
6. IES TM-21 - Technical Memorandum on Projecting Long Term Lumen Maintenance of LED Light Sources
7. NEMA SSL-1 - Electronic Drivers for LED Devices, Arrays, or Systems.
8. NYCEC - New York City Electrical Code.
9. NYCECC - New York City Energy Conservation Code

10. UL 20 - General Use Snap Switches.
11. UL 844 - Electric Lighting Fixtures for Use in Hazardous Locations.
12. UL 894 - Switches for Use in Hazardous Locations.
13. UL 924 - Emergency Lighting and Power Equipment.
14. UL 935 - Fluorescent Lamp Ballasts.
15. UL 1010 - Electrical Receptacle - Plug Combinations for Use in Hazardous Locations.
16. UL 1029 - High Intensity Discharge Lamp Ballasts.
17. UL 1570 - Fluorescent Lighting Fixtures.
18. UL 1572 - High Intensity Discharge Lighting Fixtures.
19. UL 1598 - Luminaires
20. UL 8750 - Light Emitting Diode (LED) Equipment for Use in Lighting Products.
21. CBM - Certified Ballast Manufacturers, CBM.

1.05 DESCRIPTION

A. Not Used

1.06 QUALITY ASSURANCE

A. General:

1. Luminaires shall be UL listed, approved for use in the City of New York and comply with NYCECC.
2. The luminaire types are noted within the fixture schedule which is shown in this Section. The descriptions and catalog numbers serve to establish the quality, appearance and performance of the specified luminaires.
3. Luminaires and controls shall be as manufactured by the same manufacturer.
4. All luminaires shall be the products of lighting equipment manufacturers who have previously demonstrated, by performance and reputation, the ability to manufacture products of the quality specified and shall have a minimum of 5 years' experience manufacturing the luminaires specified. Such manufacturers must maintain an organization and manufacturing facility capable of actually manufacturing the specified luminaires. For the purpose of inspection, Contractor shall assure the Engineer, free and easy access to the manufacturing facilities and inventories of any manufacturer whose equipment the Contractor proposes to supply.
5. Luminaries over the range of operating voltage and temperature shall comply with the following:
   a. Minimum power factor of 0.95
   b. THD for both current and voltage of less than 10%
6. Luminaries shall have integral UL Listed Class 2 drivers and ballasts.

7. Luminaires shall have integral surge protective devices (SPD) to protect the luminaire from common mode transient peak voltages and transient peak currents
8. Luminaires shall comply with DLC PR.
9. Luminaires utilizing incandescent sources are not permitted.
10. Luminaires shall utilize electronic or solid state drivers or ballasts where applicable.
11. The Contractor shall be responsible to assure that the exact inscription for exit and stairway signs required by local code is checked against that specified, prior to providing same. The Engineer shall be advised of any changes required to conform to local codes before such changes are effected.
12. The Contractor shall be responsible for reviewing all Contract drawings and coordinating with all trades the installation of luminaires and devices. Luminaire and device finishes and construction shall be compatible with the approved wall and ceiling types which shall be determined by the Contractor's review of all Contract drawings.
13. All luminaires shall be of the highest quality material and construction for their respective types.
14. Lamps for all luminaires shall be in accordance with EISA 2007.
15. Luminaires shall be suitable for connection to concealed or exposed conduit runs as required in each particular location and shall be of sizes suitable for lamp sizes indicated on the Contract Drawings.
16. Fittings and other materials for special luminaires not definitely shown or specified shall be of approved material, make and quality and shall have a finish that will harmonize with other parts of the luminaires. Where suitable standard materials are not available such parts of the luminaires shall be specially manufactured.

B. Field Testing:

1. Luminaires shall be field tested. The field testing shall be performed in accordance with the requirements specified under this Section.
2. Retain the services of the emergency inverter system manufacturer for field services. Field service shall be in accordance with the requirements specified under this Section.

1.07 SUBMITTALS

A. Contractor shall submit Shop Drawings and material specifications for the approval of the Engineer. Submittals shall include, but not be limited to:

1. A list of proposed manufacturers with the products they produce proposed for the contract.
2. Manufacturer's catalog cuts and drawings showing all technical information, and construction details for luminaires, including dimensions, type of wiring, weight, size, installation methods, provisions for relamping or replacing luminaires from the ground, test information criteria and rated life in hours with corresponding standard.
3. Photometric data, developed for each fixture type.
4. Lamp type and technical information.
5. Ballast type and technical information.

6. Driver type for LED luminaires and technical information including input voltage, power factor, Crest Factor and THD.
7. Scaled Shop drawings showing the locations of all fixtures and devices. The Drawings shall include the proposed routing of the branch circuits.

B. Reports

1. Field test reports shall be submitted.
2. Manufacturer's site visit report shall be submitted.

C. Operations and Maintenance Manuals

1. Operations and Maintenance Manuals shall be submitted in accordance with this Section and the Specifications

1.08 DELIVERY, STORAGE, AND HANDLING

A. Luminaires and devices shall be delivered, stored and handled in accordance with this Section, the Specifications and the manufacturer's instructions.

1.09 INCIDENTAL PARTS, SPECIAL TOOLS, AND SUPPLIES

A. Not Used

1.10 SPECIAL WARRANTY PROVISIONS / GUARANTEE PERIODS

A. Not Used

PART 2 PRODUCTS

2.01 MANUFACTURERS

A. Lamps shall be as manufactured by:

1. Cree, Durham
2. Nichia America Corporation, Wixom
3. GE Lighting, Cleveland
4. Osram Sylvania, Wilmington
5. Or approved equal.

B. Drivers and Ballasts shall be as manufactured by:

1. Osram Sylvania, Wilmington
2. Universal Lighting Technologies Inc
3. Eldo LED, Conyers
4. Advance Transformer
5. Or approved equal.

C. Emergency inverter systems shall be as manufactured by:

1. Vertiv-Emerson Network Power
2. Emergi-Lite;
3. Eldo

4. Or approved equal.

D. General use receptacles shall be as manufactured by:

1. Hubbel Incorporated
2. Arrow-Hart Incorporated
3. Copper Industries
4. Or approved equal.

E. Hazardous location receptacles and 480 volt receptacles shall be as manufactured by:

1. Crouse-Hinds Company
2. Appleton Electric Company
3. Copper Industries
4. Or approved equal.

F. General use switches shall be as manufactured by:

1. Hubbel Incorporated
2. Arrow-Hart Incorporated
3. Copper Industries
4. Or approved equal.

G. Hazardous location switches shall be as manufactured by:

1. Crouse-Hinds Company
2. Appleton Electric Company
3. Copper Industries
4. Or approved equal.

H. Plates shall be as manufactured by:

1. Hubbel Incorporated
2. Arrow-Hart Incorporated
3. Copper Industries
4. Or approved equal.

I. Covers shall be as manufactured by:

1. Crouse-Hinds Company, Syracuse, NY;
2. Appleton Electric Company, Rosemont, IL;
3. Copper Industries
4. Or approved equal.

2.02 MATERIALS / EQUIPMENT

A. Luminaires

1. A luminaire shall be provided for each luminaire symbol shown on the Contract Drawings.

2. Luminaires shall be provided with all necessary hangers, supports, conduit adaptors, reducers, hooks, brackets and other support hardware. All hardware shall have a protective, non-corrosive finish.
3. Recessed luminaires shall be provided with trim moldings and frames suitable for the types of ceilings.
4. Pendent mounted luminaires shall be suspended by means of an enclosed and gasketed cushion type hanger. The hanger shall be suitable to be mounted directly to the luminaire outlet box and shall provide a minimum of 8 degrees swing from the vertical. Stems shall be threaded rigid metal conduit, 1/2 inch minimum size. In corrosive areas stems shall be PVC coated.
5. Where luminaires are subjected to moisture, or assembled of dissimilar metals, gaskets of approved material and thickness shall be provided.
6. Explosion-proof type luminaires shall comply with the requirements of the NYCEC for the hazardous locations indicated on the Contract Drawings.
7. Luminaires shall be completely wired except where they will be directly connected to branch circuit wiring. The conductors shall be not less than No. 12 gauge, stranded, with approved heat resistant covering.
8. Mounting heights of all luminaires shall be as shown on the Contract Drawings. For special types, the height shall be determined at the time of installation.

B. Lamps

1. Lamps in association with their ballasts or drivers shall have voltage ratings suitable for the voltages shown on the Contract Drawings.
2. The color temperature of lamps shall be such that the installed luminaire color temperature is as listed in this Section or shown on the Contract Drawings.
3. LED lamps shall be in accordance with the following:
   a. Comply with UL 8750
   b. CRI of not less than 85
   c. Minimum efficacy of 140 lumens/watt
   d. Lamp L80 life of not less than 100,000 hours at 25 degrees C
   e. Maximum junction temperature of 150 degrees C
   f. Binning per ANSI C78.377 at 85 degrees C
   g. Very low thermal resistance to permit optimum heat transfer from the junction to the operating ambient.
4. Fluorescent lamps shall be 32 watt T8 energy efficient rapid start type for use with electronic ballast. Lamps shall be suitable for operation indoors and outdoors.
5. High pressure sodium lamps shall be clear with medium or mogul base and wattage as indicated in the luminaire schedule.
6. Metal halide lamps shall be standard-line phosphor coated with wattage as indicated in the fixture schedule.

C. Drivers and Ballasts

1. General:
   a. Ballasts and Drivers shall be matched for proper operation of lamps and shall meet the requirements for luminaire light output, reliable starting and operation.
   b. Ballasts and Drivers shall have dimming capabilities and the lamps shall be corresponding suitable for dimming. Dimming requirements shall be listed in this Section or as shown on the Contract Drawings.
   c. Ballasts shall be UL listed and certified by approved Nationally Recognized Testing Laboratories (NRTL). Testing Laboratories and shall conform to CBM.
2. LED Drivers
   a. LED drivers shall be matched to their lamps such that the luminaire supply voltage and its likely site variations shall produce a level of performance indicated in this Section and as shown on the Contract Drawings
   b. LED Drivers in conjunction with the respective luminaire construction shall achieve the following:
      1) Specified lumen output with variation from specified voltage of plus or minus 10%.
      2) Rated life of not less than 100,000 hours.
      3) THD of less than 10% across the specified voltage range and full power.
      4) Power factor of not less than 95% and over the full range if dimming specified.
      5) Consistent performance over the range of temperatures expected at the installation location either indoors or outdoors.
      6) Cooling shall be achieved with static arrangements. Active cooling, thermal foldback or thermal sensing to achieve temperature control are not permitted.
   c. Electrical connections between LED Drivers and all components of the luminaire shall be polarized and color coded to permit trouble free connection and reconnection. A connection diagram shall be imprinted on the Driver or the internal of the luminaire.
3. Fluorescent Ballasts:
   a. Fluorescent ballasts shall be high power factor, energy efficient type. Ballasts shall be Class P protected with a Class A sound rating. Ballast used with fixtures outdoors shall be cold weather type.
   b. Ballasts for use with 32 watt T8 lamps shall be electronic type, with total harmonic distortion less than 10 percent total. The ballast factor shall be 0.85 or greater with total of less than 61 watts input.
   c. Controllable electronic ballasts shall continuously dim between 20 and 100 percent of light output. The dimming circuitry shall be UL Class 2 fully isolated and shall provide a 0-10 VDC control signal between ballast and control element.
4. High Intensity Discharge Ballasts:
   a. Ballasts shall have a power factor of not less than 90 percent for 70 watt lamps and above.

b. Ballasts shall be (lag-type) magnetic regulator type for lamps 70 to 400 watts. High power factor reactor ballasts shall be provided for lamps below 70 watts.

c. In non-air conditioned spaces, ballasts shall be rated for operation in 40 degrees C temperature environment. Ballasts shall be capable of starting lamps with a lamp wall temperature of 0 degrees C or lower.

d. Ballasts, including the starter aid, shall protect itself against normal lamp failure modes and shall be capable of operation with the lamp in an open or short circuit condition for six months without accelerated loss of ballast life.

e. Ballast primary current during starting shall not exceed normal operating current.

f. Ballasts shall be capable of sustaining lamp operation with a line voltage dip or sag of 50 percent for up to 4 seconds when operating a nominal voltage lamp, with nominal line voltage applied to the ballast primary, as defined in ANSI 82.6.

g. The line power factor of the lamp/ballast system shall not drop below 90 percent for plus or minus 10 percent line voltage variations at any lamp voltage, from nominal through rated end-of-life lamp voltage, as described in ANSI 82.6.

5. Emergency Inverter Systems

a. Emergency inverter systems shall be provided for operation of exit signs and emergency luminaires. Each system shall be provided with normal input and inverter output voltages, capacity and number of output circuits as shown on the Contract Drawings. The output circuits shall be any combination of up to ten security and emergency circuits.

b. Each system shall consist of an input line circuit breaker, sine wave inverter and battery section complete with the manufacturer's standard monitoring and control functions housed in a vented free standing enclosure. The enclosure shall have identifying nameplates in accordance with the requirements of Section 26 05 53 – Identification for Electrical Systems. Each system shall be UL 924 listed.

c. The inverter shall be electronic solid state type suitable for operating all type loads. The batteries shall be sealed, maintenance-free lead calcium and shall include a recharge charger and transfer relay.

d. Each system shall operate on AC single phase normal input power supplying both the security circuits and the battery charger. If the normal power is lost, the inverter shall provide, AC single phase emergency power to operate for up to 90 minutes both the security and the emergency circuits.

e. The system output shall automatically switch to battery power within 750 milliseconds upon an outage of the normal input and when restored transfer back after time delay.

6. Lighting Contactor Panels

a. Lighting contactor panels shall be provided for the control of luminaires where specifically indicated on the Contract Drawings. The panel control and devices shall be arranged for proper operation in accordance with the control schematics shown on the Contract Drawings.

b. The panel enclosures shall be steel, single door type. Enclosures shall be NEMA 12 for dry, indoor areas and NEMA 4X for corrosive areas. Each enclosure shall

be equipped with a control fuse with mounting block and 300 volt screw type terminal blocks.

c. Contactors shall be mechanically held type suitable for 120 volt operation and switching ballast type lighting. Contactor voltage, ampere, number of poles and quantities within each panel shall be as shown on the Contract Drawings.

d. Where indicated on the Contract Drawings, the lighting contactor panels shall be provided with selector switches and control relays. Selector switches and control relays shall be heavy duty industrial type.

7. Receptacle and Switches

a. General:

1) Receptacles and switches shall be provided in accordance with the Detailed Specification and as shown on the Contract Drawings. The receptacles and switches shall be complete and shall include all accessories for proper installation.

2) Outlet boxes for receptacles and switches shall be in accordance with Section 26 05 33 – Raceway and Boxes for Electrical Systems.

3) Unless specifically shown otherwise or stated in the Detailed Specifications explosion proof devices in hazardous locations shall comply with the requirements of the NYCEC for Class I, Division 1, Group D locations.

8. Receptacles:

a. Receptacles shall be duplex grounding type, two pole, three wire, 125 volt AC, 15 ampere. Where shown on the Contract Drawings, other special receptacles with number of poles, voltage and current rating shall be provided. Matching plugs shall be provided for each special receptacle.

b. Receptacles for indoor dry, dusty locations shall be heavy duty, straight blade type, with reinforced polyester base and impact resistant nylon face.

c. Receptacles for wet and corrosive locations shall be marine duty, straight blade type, with heat resistant melamine body. Special receptacles in wet and corrosive locations shall be Type 316 stainless steel.

d. Receptacles for hazardous locations shall be factory sealed and shall be in accordance with the following:

1) Explosion-proof type receptacles shall be of the delayed action type requiring the turning of a plug shell on withdrawal to allow time for extinction of arcs.

2) Surface mounted explosion-proof receptacles shall be provided with cast iron or cast aluminum angle type covers with hinged flaps.

3) Flush mounted explosion-proof receptacles shall be provided with brass, chromium plated, flush plates with double hinged flaps.

4) Plugs shall be provided where required for each type of explosion-proof receptacle. Plugs shall be of explosion-proof construction, and shall have steel bodies with corrosion resistant finish. Plugs shall be fitted with aluminum alloy cable clamps and chloroprene cable bushings.

e. Receptacles for installation in floors shall be in accordance with the following:

1) Floor receptacles shall comprise a watertight unit consisting of a cast iron box with an adjustable top, permitting permanent angular and vertical adjustment, brass cover plate and 3/4 inch brass floor extension. The extension shall be of an approved height and shall be surmounted with a brass head arranged for a duplex receptacle. Exposed metal parts shall be finished to match adjacent metal finish.

2) For low voltage signal and telephone work, floor outlets shall be equal to those specified above for floor installation, except that the interiors shall be designed for cable extension as approved.

f. Fan or clock outlets shall be single receptacles with molded composition or bakelite bodies. Rating shall be 15 amperes, 125 volts. Fan outlets shall be furnished with stud supports. Clock outlets shall be of the recessed type and shall be furnished with yokes for clock support.

g. 480 volt receptacles in non-hazardous areas shall be a mechanically interlocked type with circuit breaker disconnect. The disconnect cannot be closed until the plug is fully inserted and the plug cannot be withdrawn or inserted unless the switch is open. The receptacle enclosure shall be copper - free aluminum with stainless steel parts.

9. Switches:

a. Switches shall be industrial-heavy duty, AC toggle quiet type. Switches shall be rated 120/277 volt, 20 ampere. Poles and switching shall be as shown on the Contract Drawings.

b. Switches for hazardous locations shall be factory sealed tumbler type. The switch body and cover shall be cast gray iron alloy or cast malleable iron with zinc electroplate finish.

10. Plates and Covers:

a. Stainless steel plates shall be furnished for devices in indoor dry, dusty locations. They shall have beveled edges and shall be made of Type 302/304, stainless steel.

b. Plates shall have satin finish. Attachment screws shall have matching head finish.

c. For wet and corrosive locations neoprene gasketed covers shall be used. Covers shall be galvanized ferrous or cast ferrous metal. Covers shall be PVC-coated in corrosive locations. Covers shall be equipped with gasketed spring doors for receptacles and an external operating mechanism for switches.

2.03 FABRICATION / ASSEMBLING / FINISHES

A. Not Used

2.04 SOURCE QUALITY CONTROL / SHOP TESTS

A. Not Used

PART 3 EXECUTION

3.01 EXAMINATION / PREPARATION

A. Not Used

3.02 INSTALLATION

A. Luminaires

1. Luminaires shall be installed at locations shown on the Contract Drawings. Luminaire locations shall be adjusted where necessary to clear conflicts and obstructions.
2. All luminaires shall be installed complete with all hardware, and supporting devices necessary to make a safe complete and fully operative installation.
3. The Contractor shall obtain from the manufacturer for each luminaire, diagrams, illustrations and other installation instructions. The Contractor shall install in strict conformance with such instructions and the requirements of NYCEC.
4. Recessed fixtures shall be installed in suspended ceiling openings in conformance with manufacturer's recommendations and to suit the architectural details of the area involved. Independent supports from structural members of the building shall be provided.
5. Every fluorescent luminaire shall have at least two supports, and continuous lines of fluorescent luminaire shall be supported at 4 foot intervals.
6. Pendent mounted fixtures shall be installed with pendants 1/2 inch for stems up to 5 feet and 3/4 inch for longer lengths.
7. All pendant stem hangers shall be furnished with suitable aligner canopies or outlet box covers so that the luminaires hang vertical to the finished floor irrespective of the angle of the surface from which they are suspended. When luminaires or hanger canopies are mounted flush to the ceiling or wall, and where raceways and outlet boxes serving the luminaires are surface mounted to the ceiling or wall, finishing rings shall be provided to conceal the outlet box. All visible hanging devices and appurtenances shall have the same finish as the luminaire.
8. Reflectors, lenses, diffusers, louvers and decorative elements of luminaires shall not be installed until completion of plastering, ceiling tile work, painting, and general clean-up in the area.

B. Emergency Inverter System:

1. Equipment shall be installed in accordance with manufacturer's instructions and recommendations.
2. Equipment shall be installed on concrete pads at locations indicated on the Contract Drawings so that sufficient access and working space is provided for ready and safe operation and maintenance.
3. Install system nameplates for identification of equipment.

C. Lighting Contactor Panels:

1. Panels shall be mounted rigidly and securely to the building structure or to supporting devices which are rigidly and securely supported to the building structure.
2. Panels shall be fastened with bolts and expansion shields on concrete or brick, with toggle bolts on hollow masonry units and with machine screws or welded studs on metal.
3. All panels shall be mounted parallel or perpendicular to walls, such that panels are installed in a neat and professional manner.

D. Receptacles and Switches:

1. Receptacles and switches shall be installed within outlet boxes at locations indicated on the Contract Drawings and in accordance with code requirements.
2. Receptacles shall be mounted 2 feet above the finished floor, except in hazardous locations where receptacles shall be mounted 4 feet-6 inches above the finished floor.
3. Switches shall be mounted 4 feet 6 inches above the finished floor.
4. Where devices are grouped they shall be mounted under a common plate. Where directed or where space conditions limit gang mounting, tandem or tandem gang arrangement shall be provided.
5. Where four or more switches controlling fixtures that are not visible from the switch location are grouped, the switch plate shall be engraved and filled with colored material or otherwise suitably marked to designate the control of each switch.

3.03 FIELD TESTING / QUALITY CONTROL

A. Field Tests

1. After installation, the completed lighting system and receptacle devices shall be field tested for operation and conformance. The field tests shall be witnessed by the Engineer and certified by the Contractor. The Contractor shall provide testing consisting of the following:
   a. Wiring continuity test shall be performed.
   b. Branch circuit load balance test shall be performed.
   c. Fixture and control operation test shall be performed.
   d. Emergency inverter system operation and functionality test shall be performed.
   e. Receptacle polarity and grounding.

B. Reports

1. The Contractor shall provide a field test report. The report shall identify the test performed and the results obtained.

C. Manufacturer's Field Services

1. A qualified manufacturer's service representative shall assist in the installation of the emergency inverter system, check the installation before it is placed into operation, assist in the performance of field tests, observe the initial operation and train the plant operations and maintenance staff in the care, operation and maintenance of the system.
2. The Contractor shall provide equipment start-up services and training in accordance with this Section and the Specifications.
3. The Contractor shall provide a field report from the manufacturer's representative for each visit to the site. The report shall include complete information on time, schedule, tasks performed, persons contacted, problems corrected, tests results, training instruction and all other pertinent information.
4. The service representative shall sign in with the Engineer on each day they are at the site.

3.04 STARTUP / DEMONSTRATION

A. Not Used

3.05 ADJUSTING / PROTECTION / CLEANUP

A. Cleaning of Luminaries

1. Luminaires shall be cleaned inside and out to remove construction dust prior to the start of Field Tests and again prior to Substantial Completion at the direction of the Engineer.
2. Fixtures shall be re-lamped prior to Substantial Completion.

END OF SECTION

No Text On This Page

SITE SPECIALTIES AND MONITORING SPECIFICATIONS

CONTRACT SANDRESPC

The specifications in the SITE SPECIALTIES AND MONITORING (SM)-Pages cover decorative post and chain fence, shoring and support of existing large sewers, tree removal, tree planting, electrical and drainage components as part of the East Side Coastal Resiliency Project. These pages also include construction monitoring and reporting, foundation material for asphalt as well as the quick-change moveable concrete barrier.

The SITE SPECIALTIES AND MONITORING (SM)-Pages supplement the specifications shown on the Specifications and Standards of New York City sheet at the beginning of this Volume 3, which apply to the work except as modified in these Contract Documents.

(NO TEXT ON THIS PAGE)

TABLE OF CONTENTS

Section	Description	Page No.
SECTION ESCR-6.18	DPC DECORATIVE POST AND CHAIN FENCE	1
Section ESCR-76.11	– Construction Report	6
Section ESCR-76.21	– Monitoring and Post-Construction Report	9
Section PK-227B ADA	– Granite Block on Sand – Accessible	14
SECTION PK-ESCR 0-05	– Tree Removal	16
SECTION PK-ESCR 028	– Exposed Aggregate Concrete Pavement	18
Section PK-ESCR 110	– Install Plant Material	22
SECTION PK-ESCR 149	– Geotextiles – Separation	31
SECTION PK-ESCR 156	– Bicycle Rack – Hoop	33
Section PK-ESCR 605	– 4” Dia. Ductile Iron Cement Water Pipe Line	35
Section PK-ESCR 609	– Wet Connection – 4” Dia.	37
Section PK-ESCR 610	– Gate Valve – Mechanical Joints – 4" Dia.	39
Section PK-ESCR 646	– Miscellaneous Iron and Steel	40
Section PK-ESCR 674	– 4” Dia. Hot Dipped/Heavy Gauge Galvanized Rigid Steel Conduit	41
Section PK-ESCR 679	– Electrical Manholes	43
Section PK-ESCR 685	– 500 KCMIL Copper, 600V Wire	46
Section PK-ESCR 691	– Brick Masonry/Precast Concrete for Drainage Structure	49
Section PK-ESCR 717	– Shredded Bark Mulch	51
Section PK-ESCR 741	– Plant Street Tree	52
Section PK-ESCR 749	– Foundation Material for Asphalt (Truck Measure)	58
Section PK-ESCR 764	– Tree and Planting Protection	60
SECTION PK-ESCR 943	– PARK SECURITY MEASURES	62
SECTION PK-ESCR 944	– COMPOST	66
SECTION ESCR-619.3610	– Quick-Change Moveable Concrete Barrier Transfer Vehicle (QMBTV) – Lease & Maintain	71
SECTION ESCR-619.3614	– Quick-Change Moveable Concrete Barrier (QMCB) – LEASE AND MAINTAIN	73
SECTION ESCR-619.37	– Quick-Change Moveable Concrete Barrier (QMCB) – Operation	74
SECTION 6.34 T	- TEMPORARY CHAIN LINK FENCE AND GATE	76
SECTION 6.29 LSSR	- Remove, Store and Reinstall Permanent Dedicated	78

(NO TEXT ON THIS PAGE)

SECTION ESCR-6.18 DPC DECORATIVE POST AND CHAIN FENCE

ESCR-6.18 DPC.1. INTENT

This section describes the furnishing and installing of the decorative post and chain fence as indicated on the plans within the roadway planting medians at Houston St.

ESCR-6.18 DPC.2. DESCRIPTION

This item shall consist of furnishing and installing decorative posts and chain fence that match existing or as approved by the Engineer, constructed where indicated on the plans and as directed by the Engineer, and in accordance with these specifications.

ESCR-6.18DPC.3. MATERIALS

(A) Posts shall be 2” O.D., length, ASTM A53. Grade B. Posts shall be finished with black powdercoating as specified in section 7.50 WF.

(B) Installation sleeves shall be 3” O.D., length, ASTM A53. Grade B.

(C) Post Caps shall be round ball caps to match those that were removed or as approved by the Engineer. Post Caps shall be finished with black powdercoating.

(D) Chain shall be 3/8”, Grade 3 proof chain with black powdercoating.

(E) The concrete footing is 12” diameter and 24” deep. The concrete is Class B-32 as per NYCDOT Standard Highway Specifications Section 3.05, Concrete.

(F) Submittals. All submittals shall be in accordance with the requirements of the Contract. Shop Drawings are required. The workmanship and finish of the final product shall be equivalent to the approved samples.

1. Samples. Full size samples shall be submitted for Engineer's approval for the following components: one (1) typical complete powdercoated fence post with chain connections, one (1) five foot (5') length of powdercoated chain with connecting link, powdercoated post cap and powdercoated sleeve cap.
2. Foundry Certificate. A certificate verifying the quality of steel and ductile iron for the decorative post and chain fence components listed above shall be submitted to the Engineer for approval.

ESCR-6.18 DPC.4. METHODS

(A) Delivery, Storage and Handling:

1. Delivery: Deliver materials to site in manufacturer's original, unopened containers and packaging, with labels clearly identifying product name and manufacturer.
2. Storage: Store materials in clean, dry area in accordance with manufacturer's instructions.
3. Handling: Protect materials during handling and installation to prevent damage.

(B) Installation: Install in locations as shown on plan.

1. The concrete footing is to be Class B-32 as per section 3.05 concrete.
2. The fence posts shall be erected in holes that have been formed in the concrete to receive them. After the posts have been set in place and properly supported to hold them in line and grade, the annular space shall be filled to the depth shown on the plans with grout composed of one (1) part Portland Cement to two (2) parts sand.
3. After the grout has hardened, the remaining space shall be filled with an epoxy gel sealer filler approved by the Engineer. Sealer shall be applied in strict accordance with the manufacturer's instructions, and shall be tooled in to fill and seal hole and form a one-quarter inch (1/4") wash away from the post.
4. Any fence posts not set plumb and true to line and grade shall be removed and replaced at the Contractor's expense.
5. The Contractor shall maintain the fences and shall repair and replace all members that are disturbed, damaged, or destroyed.

ESCR-6.18 DPC.5. MEASUREMENT

The quantity of Decorative Post and Chain Fence to be paid for shall be the number of LINEAR FEET of fence furnished and erected complete, in accordance with the plans, specifications, and directions of the Engineer.

ESCR-6.18 DPC.6. PRICE TO COVER

The prices bid shall be unit prices per LINEAR FOOT of Decorative Post and Chain Fence. The unit price shall include the cost of all labor, materials, equipment, and insurance required to furnish and erect the post and chain fences and concrete footing, including all incidental expenses necessary to complete the work in accordance with the plans and specifications, to the satisfaction of the Engineer.

Payment will be made under:

Item No.	Description	Pay Unit
ESCR-6.18DPC	Decorative Post and Chain Fence	LF

END OF SECTION

SECTION ESCR-70.41 SHORING, BRACING, SUPPORTING AND PROTECTING EXISTING LARGE SEWERS

ESCR 70.41.1 DESCRIPTION

Under this section the Contractor shall be required to shore, brace, support and protect existing large sewers and adjacent soils in order to construct new parallel conveyance system below the existing sewer at the location shown on the plans and specifications or as directed by the Engineer.

ESCR 70.41.2 WORK TO BE PERFORMED

Before the start of this work, the Contractor shall engage the services of a licensed New York State Professional Engineer who specializes in support of excavation, utility structures and supporting existing utility systems. The Professional Engineer's qualifications and name of the firm shall be submitted for approval before the work. Upon acceptance of the Professional Engineer's qualifications, the following work shall be performed:

(1) Review and obtain as built records, test pits and television inspection from NYCDDC and NYCDEP or as obtained by the contractor;

(2) Examine the existing sewer by making test pits and performing sewer cleaning and television inspection as necessary to verify the existing condition and the size of the existing sewer structure at the crossing location. Contractor shall provide inspection program to the Engineer for review and approval prior to starting inspection work.

(3) The Professional Engineer shall make quantitative analysis of the existing sewer structure and develop a support of excavation system and means to support the existing sewer structures to facilitate the construction of a new parallel conveyance system under the existing sewer.

The analysis shall include, but not be limited to inclusion of the proposed method of sheeting, dewatering, change in water table, vibration due to installation of sheeting and/or piles, etc.

(4) The result of the analysis shall be submitted to the Engineer for review and approval.

ESCR 70.41.3 SHOP DRAWINGS AND COMPUTATIONS

The approved Professional Engineer for this work shall submit signed and sealed shop drawings together with design computations detailing the means and methods for constructing support of excavation and support of the existing sewer structures. Shop drawings and computations shall be submitted per Section 1.06.13 of the NYCDOT Standard Highway Specifications.

(A) Shop drawings shall present the following:

(1) All working and erection dimensions.

(2) Arrangement, details and sectional views.

(3) Kinds of materials and equipment.

(4) Parts list and description thereof.

ESCR 70.41.4 MATERIALS

(A) Concrete shall comply with the requirements of the NYCDOT Standard Highway Specifications, Section 3.05

(B) Controlled Low Strength Materials (CLSM) shall comply with the requirements of the NYCDOT Standard Highway Specifications, Section 7.18.

(D) Reinforcement for concrete shall comply with the requirements of the NYCDOT Standard Highway Specifications, Section 2.23.

(E) Structural steel shall comply with the requirements of the NYCDOT Standard Highway Specifications, Section 2.35.

(F) Timber shall comply with the requirements of the NYCDOT Standard Highway Specifications, Section 2.40

(G) Jet Grout shall comply with the requirements of Section ESCR-2.

(H) Backfilling shall comply with NYCDEP Standard DIVISION IV - GENERAL CONSTRUCTION PROVISIONS.

ESCR 70.41.5 METHODS

The requirements of NYCDEP Standard DIVISION IV - GENERAL CONSTRUCTION PROVISIONS shall apply to the work to be done hereunder.

Any damage to existing sewers caused by the Contractor's means and methods of construction operation, whether it is accidental or due to negligence or carelessness in performing the work required in this section, shall be remedied by the Contractor at own expense, and to the satisfaction of the Engineer. No separate or additional payment will be made to the Contractor for repair to damage as a result of such accident, negligence or carelessness.

Examine the existing sewer by making test pits and performing sewer cleaning and television inspection as approved by the Engineer to verify the existing condition and size of the sewer structure at the crossing location.

Upon carefully exposing the existing sewer, the contractor shall define survey targets on the existing sewer to facilitate monitoring of sewer movement during construction. The contractor shall provide the Engineer with measurements prior, during (at the start of each working day until backfill is completed) and after construction as approved by the Engineer. Any movement detected in the existing sewer will require the Contractor to stop work and perform corrective action to stabilize the existing sewer. No separate or additional payment will be made to the Contractor.

Contractor shall backfill area between new parallel conveyance system and existing sewers with CLSM or other material approved by the Engineer to assure full bearing under the existing sewer structure. CLSM shall extend a minimum of 12" beyond the width of the existing sewer structure. Temporary sewer support system shall remain in place until the CLSM has reached a 7 day strength or as approved by the engineer.

Material placed below the existing sewer to support it shall be cut off from the support system and abandoned in place.

Temporary sheeting shoring, bracing and remaining sewer support system shall be removed after completion of construction unless otherwise approved by the Engineer.

Contractor shall perform a television inspection of the existing sewer, 30' either side from the outer limits of excavation. If directed, the Contractor shall then shotcrete the existing sewer.

ESCR 70.41.6 MEASUREMENT AND PAYMENT

The contract price for SHORING, BRACING, SUPPORTING, AND PROTECTING EXISTING LARGE SEWERS shall be for the lump sum price bid for each large sewer and shall include the costs of all labor, material, plant, test pits, inspections, , shop drawings, computations, monitoring, permits, testing, equipment, excavation, backfilling support of excavation, dewatering and insurance required and necessary for shoring, bracing, supporting and protecting the sewers specified. It shall also include all costs associated with the obtaining of all consents necessary to perform this work.

No separate payment will be made for the removal or abandoning of any temporary supports or for damage due to the Contractor's construction operations.

New parallel conveyance system, new concrete cradle, and new micropiles along withsewer cleaning, television inspection and shotcreting of the existing sewer shall be paid for separately.

Payment will be made under:

Item No.	Item	Pay Unit
ESCR-70.4101	SHORING, BRACING, SUPPORTING AND PROTECTING EXISTING LARGE SEWERSAT JACKSON AND WATER STREETS	LS
ESCR-70.4102	SHORING, BRACING, SUPPORTING AND PROTECTING EXISTING LARGE SEWERS AT AVENUE C, STA C415+70	LS

END OF SECTION

SECTION ESCR-76.11 – CONSTRUCTION REPORT

76.11.1 INTENT.

The intent of this section is to prepare preconstruction reports for work to be performed under the contract to ensure that the Contractor's proposed means and methods of construction do not create or aggravate any potentially dangerous conditions. In order to ascertain the effects of construction on structures, the Contractor will be required to retain the services of a qualified firm with experience in structural engineering, soil mechanics, foundations, installation of piles, evaluation of the effect of construction on buildings and structures, effects of tunneling operations and tunneling shaft construction on buildings and structures, effects of dewatering and the associated movement of soil due to dewatering and the effect of vibrations upon structures. All construction work (bulkhead, manhole and sewer construction, roadway, sidewalk, curb, water main, regrading etc.) is subject to the preconstruction report.

76.11.2 SPECIAL EXPERIENCE REQUIREMENTS.

The Contractor shall submit to the Engineer qualifications of the firm it proposes to provide the engineering services described in this section. The proposed firm must meet the following special experience requirements.

(1) Such firm must, within the last three (3) consecutive years, have successfully provided engineering services similar to the services described in this section on a minimum of two (2) comparable projects.

(2) Such firm must carry professional liability insurance as specified in Schedule "A".

Compliance with such special experience requirements will be determined solely by the Engineer. Once a firm is approved, no substitution will be permitted, unless the Engineer has approved the qualifications of the proposed replacement in writing in advance. If the qualifications of the proposed firm are not acceptable, the Contractor shall submit the qualifications of another proposed firm within fifteen (15) days of notice to do so.

76.11.3 SUBMISSION OF PRECONSTRUCTION REPORT.

Upon approval and prior to construction the chosen firm (hereinafter referred to as the firm) shall submit six (6) copies of report(s) incorporating their findings and recommendations. The report(s) shall be prepared by or under the immediate direction of a New York State Licensed Professional Engineer as evidenced by the imprint of the Professional Engineer's seal and signature on the document. The report(s) shall include but not be limited to the following:

(A) A detailed description of the Contractor's proposed means and methods of construction including the installation of sheeting systems, manhole and sewer pile systems, utilities, and dewatering system.

(B) An inspection of the interior and exterior (including photographs and digital audio-visual recordings as required) of all building, tunnel, and/or structures that may be affected by the proposed means and methods of construction and dewatering.

(C) A definition of the "radius of influence" that the proposed dewatering, bulkhead and sheeting system installations, pile installation, ground improvement, and other construction activity that will impart on the surrounding soil.

(D) A definition of the limits of horizontal and vertical movement each building and/or structure within the "radius of influence" can tolerate without damage to the structural integrity of that building and/or structure, should these values be different than those provided for critical structures in Section ESCR-76.21; however, these limits shall be subject to the approval of the Engineer, and shall not exceed twice the limits provided for critical structures. Movements which shall be considered include, but are not limited to, vibration-related settlements, differential settlements, settlements from dewatering, and building movement and/or rotation due to excavation or construction-related work.

(E) A complete study of the vibrations that each building/structure can tolerate along with the anticipated vibrations promulgated by the means and methods of construction, taking into account the age and condition of the buildings.

(F) A statement that the limits of movement and vibrations as defined in (D) and (E) above will not be exceeded as a result of the proposed means and methods of construction, as well as means and methods the Contractor, at the Contractor's own expense, will employ should any limits be exceeded. Limits of movement and vibrations shall be proposed by the Contractor and the firm hired by the Contractor, should those values be different than those provided for critical structures in Section ESCR-76.21, but not exceed twice the values for critical structures; however, these limits shall be subject to the approval of the Engineer.

(G) A geological profile of the soils in the area. This profile shall be based upon the boring logs taken for this project. The Contractor, at own discretion, may make additional borings to supplement the boring logs taken for the project. Supplemental borings made by the Contractor shall be at no additional cost to the City, the cost for these borings shall be deemed included in the price bid for the various items under Section ESCR-76.11CR - CONSTRUCTION REPORT.

(H) A geotechnical data summary including assumed values for the physical and strength characteristics of the soils shown on the Record(s) of Borings, developed from, but not limited to available soil and/or rock descriptions, blow counts, and available geotechnical laboratory testing. Such physical and strength characteristics include, but are not limited to, a soil's unit weight, friction angle, cohesion, consolidation properties, and permeability/drainage properties.

(I) Engineering computations to substantiate any values stated, recommended, or defined in (C), (D) and (E), using the appropriate data from (G) and (H).

The report(s) shall include all field notes, measurements and photographs and digital audio-visual recordings, as required, of existing conditions which may be aggravated by the proposed construction work and shall include a visual inspection of the interior and exterior of all buildings and structures within the radius of influence of construction activity and dewatering. A view of each exterior face of the building and/or structure is required. Additional interior photographs shall be taken to show any existing cosmetic or structural damage on buildings and tunnels.

Applications for consents to enter buildings and/or structures for the purpose of inspection shall state that the inspection is necessary to ensure the structural integrity of the building. One counterpart of each consent, duly signed and acknowledged by the owner or one of the owners, executors or administrators for the owner and for the owner's agents, lessee and any other persons who shall have a vested or contingent interest in the building, or notice of refusal if consent is not

obtained shall be filed with the Engineer at least ten (10) days before the commencement of work which affect the building or structure.

The report shall also include recommendations or comments regarding any potentially dangerous and/or unsafe conditions uncovered along with all other additional information required pursuant to other sections of the specifications.

All results of the building or structure examinations shall be incorporated into the preconstruction report.

No work may begin until the Department of Design and Construction has accepted the preconstruction report. This pertains to all contract work and no exceptions will be allowed unless otherwise stated in these specifications.

76.11.4 PRICE TO COVER.

(A) The contract price for Item CONSTRUCTION REPORT shall be a lump sum price and shall include the cost of all labor, materials, plant, equipment and insurance necessary or required to prepare the preconstruction report, including building examinations and do all other work incidental thereto all in accordance with the specifications and as directed by the Engineer.

(B) No payment for the preconstruction report will be made until after the Department of Design and Construction has accepted the preconstruction report.

Payment will be made under:

Item No.	Item	Pay Unit
ESCR-76.11	CONSTRUCTION REPORT	L.S.

END OF SECTION

SECTION ESCR-76.21 – MONITORING AND POST-CONSTRUCTION REPORT

76.21.1 INTENT.

The intent of this section is to monitor and summarize the effects of construction activities on structures located within the influence line of work to be performed under the contract to ensure that the Contractor's proposed means and methods of construction do not create or aggravate any potentially dangerous conditions.

The Contractor will be required to adhere to all criteria, requirements and recommendations of the Engineer approved preconstruction report(s); if not, the Contractor must cease work until corrective actions are taken.

76.21.2 SPECIAL EXPERIENCE REQUIREMENTS.

The Contractor shall submit to the Engineer qualifications of the firm it proposes to provide the engineering services described in this section. The proposed firm must meet the following special experience requirements:

(1) Such firm must, within the last three (3) consecutive years, have successfully provided engineering services similar to the services described in this section on a minimum of two (2) comparable projects.

(2) Such firm must carry professional liability insurance as specified in Schedule "A".

Compliance with such special experience requirements will be determined solely by the Engineer. Once a firm is approved, no substitution will be permitted, unless the Engineer has approved the qualifications of the proposed replacement in writing in advance. If the qualifications of the proposed firm are not acceptable, the Contractor shall submit the qualifications of another proposed firm within fifteen (15) days of notice to do so.

The firm approved for the preparation of the preconstruction report(s) in accordance with Section ESCR-76.11 - Construction Report, may also be submitted for approval to perform the monitoring and post- construction report work.

76.21.3 SUBMITTALS.

(A) MONITORING REPORTS

The firm will be required to perform the monitoring during construction activity, including installation of sheeting, piles, manholes and sewers, and submit reports to the Engineer on a weekly basis. These reports shall include sketches noting the location of all monitoring points. The minimum monitoring points required are shown on the Contract Drawings; however, the Contractor and the consulting firm hired by the Contractor may add monitoring points as they see fit. Should any of the criteria set forth in the preconstruction report(s) be exceeded, the Engineer shall be notified immediately. Monitoring shall include but not be limited to the following:

(1) Settlement Monitoring

(a) For Existing Structures And/Or Buildings (other than Critical Structures as defined below):

(i) A series of reference points shall be established outside of the "radius of influence" (as previously described in Subsection 76.11.3, paragraph (C)) for monitoring structural settlements. All initial and subsequent readings shall be taken to the nearest one-hundredth (0.01) of a foot.

(ii) Structures and/or buildings shall be monitored daily for vertical and horizontal movement with respect to when work is being performed within the radius of influence. Upon completion of work within the radius of influence, buildings and/or structures shall be monitored weekly for the first month then monthly for the next five (5) months. In the event of an unusual or unexpected event, monitoring shall be performed within twenty-four (24) hours of the event.

(iii) Should the limit of horizontal and/or vertical movement, as set forth in the preconstruction report, of any building and/or structure be exceeded, the Contractor shall immediately and concurrently notify the Engineer and, at the Contractor's own expense, follow the steps included in the preconstruction report outlined in Subsection 76.11.3, paragraph (F) to rectify the situation and prevent any further settlement of such building and/or structure. The Contractor shall be fully responsible for any damages to any foundations, walls or other portions of buildings and/or structures that may result during the courses of this construction. Any damage done by the Contractor, whether it is accidental or due to negligence or carelessness in performing the work included in this contract shall be made good by the Contractor at the Contractor's own expense.

(iv) Permissible settlement for structures, other than critical structures, may be established by the Contractor's firm, but shall not exceed twice the amounts specified below for critical structures.

(b) For Critical Structures when pile and ground improvement installation is being performed:

(i) Critical structures include:
(1) The Williamsburg Bridge,
(2) The former Gouverneur Hospital and Dispensary,
(3) East River Housing Corporation, and
(4) Public School 110
(5) Stuyvesant Town Peter Cooper Village

(ii) Settlement points shall be installed at all critical structures, including columns of overhead structures adjacent to proposed construction work. A minimum of two (2) settlement points shall be established at each component of a critical structure or column.

(iii) A minimum of two (2) benchmarks shall be established for the settlement monitoring. The benchmark should be a minimum of fifty (50) feet distance from the component of the critical structure or columns and construction work alignment.

(iv) The initial survey of the settlement points shall be done prior to pile, support of excavation, or sewers installation or construction activity within one hundred (100) feet of the component of the critical structure or columns.

(v) A warning shall be issued if settlement reaches 1/8-inch.

(vi) All pile, sheet pile, or jet grouting installation work, or construction activity within

one hundred (100) feet of the critical structure or its columns shall be stopped if settlement reaches 1/4-inch.

(vii) Frequency of settlement monitoring shall be as follows:

(1) Pile, support of excavation, or sewers between fifty (50) feet and one hundred (100) feet distance from the critical structure or its columns; once every four (4) days.

(2) Pile, support of excavation, or sewers within fifty (50) feet of the critical structure or columns; once every two (2) days.

(3) If the settlement reaches 1/8-inch; once a day.

(c) All survey readings shall be done by or under the immediate supervision of a Licensed Land Surveyor, currently registered in the State of New York. All survey readings shall include the imprint of the Surveyor's seal and signature.

(d) The Contractor shall transmit a copy of all readings to the Engineer on the same day they are taken.

(2) <u>Vibration Monitoring</u>

(a) For Existing Structures And/Or Buildings (other than critical structures as defined below):

(i) Should the Contractor employ means and methods of construction that will result in vibrations being imparted to the surrounding soil and/or buildings and/or structures, the Contractor shall monitor and record particle velocity. Locations of the monitoring points shall be placed in such a manner so as to ensure recordings that reveal any possibility of damage to existing structures and/or buildings. Location of the monitoring points shall be subject to the Engineer's approval.

(ii) These points shall be monitored at all times when means and methods of construction resulting in vibrations are employed. The maximum permissible peak particle velocity shall be that noted in the preconstruction report. Should particle velocities be exceeded the Contractor shall immediately cease operations and resort to another method which will eliminate or minimize the effect of vibrations.

(iii) It shall be the Contractor's responsibility to restore any buildings or structures damaged as a result of the Contractor's operations to its original condition or better.

(iv) The maximum permissible peak particle velocity may be established by the Contractor's consulting firm, but shall not exceed twice the value specified for critical structures.

(b) For Critical Structures when piles, support of excavation, and sewer system installation is being performed:

(i) Critical structures include:
(1) The Williamsburg Bridge,
(2) The former Gouverneur Hospital and Dispensary,
(3) East River Housing Corporation, and
(4) Public School 110
(5) Stuyvesant Town Peter Cooper Village

(ii) Vibrations at critical structures shall be monitored during the installation of piles, sheet piles, and jet grouting that are between fifty (50) feet and one hundred (100) feet from the critical structure component or columns.

(iii) A total of two (2) seismographs shall be used for the monitoring; one (1) at each of the closest critical structure component or two (2) columns from pile installation.

(iv) Check the ambient vibration prior to vibration monitoring.

(v) The allowable limit of vibration during pile driving is 0.5-inch per second (in particle velocity) above the ambient vibration level. Stop pile driving if the vibration exceeds 0.5- inch per second above ambient.

(c) The results of the vibration monitoring shall be submitted to the Engineer on the same day of monitoring.

(B) POST-CONSTRUCTION REPORT

Within thirty (30) days of the completion of all work that necessitated monitoring, the chosen firm shall prepare and submit six (6) copies of a report(s) detailing the results of the monitoring program. The report(s) shall include a comparison of all assumptions and field-measured values. Should there be excessive discrepancies between the assumptions and field-measured values, an explanation shall be presented within the report(s). These reports shall include sketches of all monitoring points. The reports shall include the location and length of all piles and sheet piles driven superimposed on the geological profile. The location and lengths of piles and sheet piles to be installed are shown on the Contract Drawings. The post- construction report(s) shall be prepared by or under the immediate direction of a New York State Licensed Professional Engineer as evidenced by the imprint of the Professional Engineer's seal and signature on the document.

76.21.4 RESPONSIBILITIES OF THE CONTRACTOR.

Prior to bidding the Contractor shall examine the site and available subsurface inspection information and formulate means and methods of construction that will not result in any damage to existing structures. Should the Contractor lack the expertise in evaluating the effects of the Contractor's means and methods of construction, the Contractor should prepare its bid in consultation with an experienced firm or authority. In any event, the Contractor will be held liable for any damage to any existing structures due to the Contractor's means and methods of construction.

In addition, should the results of the preconstruction report(s) indicate that damage will result from the Contractor's proposed means and methods of construction, the Contractor will be required to amend the Contractor's means and methods of construction in accordance with the preconstruction report, at no additional cost to the City.

76.21.5 PRICE TO COVER.

The contract unit price shall be the lump sum price bid and shall include the cost of all labor, materials, plant, equipment and insurance necessary or required to prepare weekly reports, examine buildings and structures, perform the construction monitoring, prepare the post-construction report(s) and do all other work incidental thereto all in accordance with the specifications, and as directed by the Engineer.

No separate or additional payment will be made for compliance with the requirements of the preconstruction report(s) including, but not limited to, any modification to the Contractor's means and methods of construction.

Payment for this work shall be made proportional to the work completed as follows:

Completion of Field Monitoring	60%
Acceptance of Post-Construction Report	40%

Payment will be made under:

Item No.	Item	Pay Unit
ESCR-76.21	MONITORING AND POST-CONSTRUCTION REPORT	L.S.

END OF SECTION

SECTION PK-227B ADA – GRANITE BLOCK ON SAND – ACCESSIBLE

PK 227B.1. INTENT

This section describes the furnishing and installation of granite cobble over sand in accordance with the plans, specifications and directions of the Engineer.

PK 227B.2. DESCRIPTION

Under this section, the Contractor shall furnish and install granite cobble pavers in accordance with the details indicated on the Contract Drawings, specified, or directed by the Engineer.

PK 227B.3. MATERIALS

(A) GRANITE BLOCK— Blocks shall be of fine or medium grained granite showing an even distribution of constituent minerals. They shall be of uniform quality and texture throughout, and free from seams or disintegrated materials., except that no block shall be less than six (6”) inches long, four (4”) inches wide and five (5”) deep. Granite block may be rejected by the engineer for reuse in re-laid wearing courses because of excessive roundness of other objectionable characteristics. All installed pavers shall have a flamed finish.

(B) SAND—Sand for sand setting bed and joint filler shall consist of clean, hard, durable uncoated particles free from lumps of clay and all deleterious substances and shall be so graded that when dry, one hundred percent shall pass a ¼” square opening sieve; not more than thirty-five percent (35%) by weight shall pass a No. 50 sieve. Cushion sand may be rejected if it contains more than ten percent (10%) by weight of loam and/or silt.

(C) MORTAR—The mortar shall be composed of one (1) part of Portland Cement and a maximum of two (2) parts sand, with not more than (5) percent of the cement content of hydrated lime or lime putty.

PK 227B.4. METHODS

Preparation of Subgrade: The Contractor shall trim and roll the subgrade to smooth, uniform lines to the satisfaction of the Engineer, prior to placing the pavement. The Contractor shall place geotextile over the prepared subgrade of structural soil, overlapping edges a minimum of six inches (6") to ensure complete coverage prior to placing the sand base.

Sand Cushion: The blocks shall be laid on a sand cushion of a maximum thickness of one inch (1"). The sand cushion shall be compacted by being rolled with a roller weighing one hundred fifty pounds (150 lbs.) per foot of width or by tamping, as directed by the Engineer.

Setting Blocks: The blocks shall be carefully laid on a sand cushion according to the patterns shown on the plans or as directed by the Engineer. Joints between blocks shall be a maximum of one inch (1") and a minimum of three-quarters inch (3/4") in width. All blocks shall be clean when placed in the pavement. Blocks which, in the opinion of the Engineer, are not satisfactorily clean shall be well washed before being placed. Cutting of blocks to meet pattern requirements will be permitted, subject to the approval of the Engineer.

After a sufficient area of block pavement has been laid, the surface shall be tested with a ten foot straight edge laid parallel with the center line and any depression exceeding one-quarter inch (1/4") shall be corrected and brought to the proper grade. All stones disturbed in making replacements or correcting depressions shall be settled into place by carefully ramming or

tamping to grade by the use of a hand tamper applied upon a two inch (2") board. Each section of pavement must be acceptable to the Engineer before the joints in that section are filled.

Filling Joints: Where sand joints are called for, the joints shall be filled with cushion sand. The sand shall be firmly packed in the joints between the blocks. Immediately after the joints are filled, the pavement shall be swept clean.

Where mortar joints are called for, the joints shall be completely filled with a cement grout mixture. The grout shall be firmly packed in the joints between blocks. Immediately after the joints are filled, the pavement shall be swept clean. The finished surface shall be free of all cement stain and excess grout and shall be acceptable to the Engineer.

Protection: All fresh mortar work shall be carefully protected from freezing and from drying effect of the sun and wind, and if required, it shall be sprinkled with water at such intervals and for such time as may be directed. Stonework shall be protected from injuries of all sorts, and all portions which may become damaged or may be found defective shall be repaired, or if directed, removed and rebuilt. No mortar work shall be laid or re-laid when the temperature is below 40 degrees Fahrenheit.

PK 227B.5. MEASUREMENT

The quantity of granite blocks to be measured for payment shall be the number of square feet of granite blocks installed, in place, to the satisfaction of the Engineer.

PK 227B.6. PRICES TO COVER

The unit price bid per square foot of granite block over structural soils shall cover the cost of all labor, materials, plant, equipment, insurance, and necessary incidentals as required to furnish and install dimensioned granite pavers in accordance with the Contract Drawings, the specifications, and the directions of the Engineer.

Payment will be made under:

ITEM NO.	ITEM	PAY UNIT
PK-227B ADA	GRANITE BLOCKON SAND- ACCESSIBLE	SF

END OF SECTION

SECTION PK-ESCR 0-05 – TREE REMOVAL

WORK: The Contractor shall cut and remove within the contract limits, all trees labelled for removal over 0" DBH, including the root to a depth of three (3') feet below the surface, where shown on the plans or as directed by the Engineer.

Note: DBH is defined as Diameter at Breast Height, which is 4'-6" above grade.

SPECIAL REQUIREMENTS FOR ASIAN LONGHORNED BEETLE QUARANTINE ZONE: For tree work to be performed within the quarantine zone, the Contractor shall utilize the service of a Contractor certified by the New York State Department of Agriculture and Markets. Due to current Federal, State and NYC DPR policy, any wood waste that is generated must be completely chipped within the Quarantine Zone, by said certified Contractor. Log splitting equipment, where necessary, shall be utilized at no extra cost to the City. For additional information regarding procedures, contact the Engineer. Also, see requirements listed under heading "Submittals".

METHOD: The Contractor shall carefully protect against damage to all existing trees, plants and other features to remain. The Contractor shall be liable for any damage to such trees, plants, park features and other property caused by Tree Removal operations and all damaged property shall be replaced or restored to its original condition, to the satisfaction of the Engineer.

The Contractor shall cut and remove all trees designated for removal within the limits of the contract or as directed by the Engineer. The stumps and roots of these trees shall be removed to a depth of three (3') feet below the ground surface. All voids and excavations left after removal of the tree and roots shall be backfilled to grade with clean fill. The fill shall be placed and compacted by acceptable methods to the satisfaction of the Engineer and shall meet the requirements of the NYCDOT Standard Highway Specifications. Chips generated by root removal operations shall be removed prior to backfilling.

For trees designated for removal with stump to remain, the stumps of these trees shall be cut flush to the ground surface.

Cutting of trees shall be done by competent workers only and in a professional manner. All trees shall be "topped" and "limbed" previous to felling unless otherwise directed by the Engineer. All branches, limbs, trunks, stumps, roots and other debris shall be removed from the site or otherwise disposed of to the satisfaction of the Engineer.

No trees are to be removed except as ordered by the Engineer.

SUBMITTALS: All submittals shall be as specified in the S-Pages. The Contractor shall submit the following for review and approval prior to performing work.

Qualifications In Quarantine Zone: State Certification- For all contracts within the Quarantine Zone, the Contractor must submit a copy of a valid Compliance Agreement issued by the State of New York Department of Agriculture and Markets, Division of Plant Industry.

MEASUREMENT AND PAYMENT: The quantity of **TREE REMOVAL** to be paid for under this Item shall be the number of tree units calculated in accordance with the payment schedule above, completely removed in accordance with the plans and specifications and directions of the Engineer.

The price bid shall be a unit price for **EACH** tree of the over 0" DBH, and shall include the cost of all labor, materials and equipment necessary for removing and disposing trees, including removal of root to 3' depth where required, borrowed fill, and all other incidental expenses necessary to complete the work in accordance with the plans and specifications, to the satisfaction of the

Engineer. The cost of State Certification and chipping wood waste shall be included in the bid price for all Contracts located within the Quarantine zone.

Payment will be made under:

Item No.	Item	Pay Unit
PK-ESCR 0-05	TREE REMOVAL (0”-6” DBH)	EA
PK-ESCR 0712	TREE REMOVAL (6”-12” DBH)	EA
PK-ESCR 1318	TREE REMOVAL (12”-18” DBH)	EA
PK-ESCR 1924	TREE REMOVAL (18”-24” DBH)	EA
PK-ESCR 2530	TREE REMOVAL (24”-30” DBH)	EA
PK-ESCR 3136	TREE REMOVAL (30”-36” DBH)	EA
PK-ESCR 3742	TREE REMOVAL (36”-42” DBH)	EA

END OF SECTION

SECTION PK-ESCR 028 – EXPOSED AGGREGATE CONCRETE PAVEMENT

PK-ESCR 028.1. INTENT.

This section describes construction of Concrete Sidewalk with Special Scoring and Exposed Aggregate Surface Treatment (Saw Cut Type Joints).

PK-ESCR 028.2. DESCRIPTION.

The work shall consist of the construction of Concrete Sidewalk with Special Scoring and Exposed Aggregate Surface Treatment (Saw Cut Type Joints).

(A) Concrete Sidewalk shall be of the width specified and shall be laid on a foundation as indicated on the drawings.

(B) Where specified on the Contract Drawings or directed by the Engineer, concrete sidewalk shall be reinforced with wire mesh.

PK-ESCR 028.3. MATERIALS.

The material requirements of Section 3.05 shall apply to all concrete sidewalk with special scoring and exposed aggregate surface treatment, along with the following modifications and additions:

(A) Concrete Mix Design: The Contractor shall determine the concrete mix

design for exposed aggregate concrete pavement. The mix design shall have a minimum compressive strength equal or greater than Class B-32 concrete. It is recommended that the mix design take into consideration the addition of surface seeding of coarse aggregate. The contractor may by required to test different mix designs as part of the mock ups.

(B) Exposed Aggregate for Surface Seeding and Pavement Finishing shall be as follows:

a. Material: Select, hard, and durable; washed; free of material that reacts with the cementitious material or causes staining; from a single source, with fine aggregate and gap graded coarse aggregate as follows:

b. Coarse Aggregate (for seeding): Provide stone 3/8" in size. Provide angular stone 1/4” to 3/16” maximum in size. Aggregate shall be supplied by

   i. Geo Schofield 831 Main Street Bridgewater NJ ph: 732.356.0858 f; 732.356.1197
   ii. Pasvalco Company 108 Bogart Street Closter NJ ph:888.727.8252 f:201.768.5927
   iii. KAFKA GRANITE, LLC | Mosinee, WI ph: 800.852.7415; kafkagranite.com
   iv. Or approved equal.

c. Size, color, and percent of aggregate seeding mixture to be indicated on drawings:

d. Exposed Aggregate Grading: Fine aggregate shall be 25 to 35 percent of total exposed aggregate material as recommended by the Portland Cement Association.

(C) <u>Expansion Joint Sealant:</u> Joint sealant shall be a two (2) component, polyurethane based, self- leveling, chemically cured elastomeric sealant such as Sikaflex 429 primer with Sikaflex - 2C SL sealant as manufactured by Sika Corporation, Lyndhurst, NJ, or DynaTrol® II - SG, as manufactured by Pecora Corporation, Harleysville, PA, or approved equal. The color of the sealant shall match the color of adjacent pavements.

(D) Expansion Joint: The expansion joint material shall be one of the following:

a. A pre-molded bituminous fiber joint filler, as specified in General Requirements (requires a bond breaker and sealant) or,
b. A pre-molded closed cell expanded polyethylene foam joint filler, such as MasterSeal 920 by BASF Inc., (requires only sealant) or,
c. An approved equal of any of the above.

(E) Bond Breaker: If bituminous fiber material is used, a bond breaker such as one-half inch (1/2") width polyurethane tape or five-eighth inch (5/8") diameter expanded polyethylene foam backer rod shall be installed as recommended by the manufacturer. A bond breaker will not be required for a pre-molded foam joint or a shredded recycled rubber aggregate joint filler, but sealant is always required.

(F) Subbase Course Material: The material requirements of PK-ESCR 748, as currently amended, shall apply to all subbase course material for exposed aggregate concrete pavement.

PK-ESCR 028.4. METHODS.

All work required to install new concrete sidewalk with special scoring, saw cut type joints, and exposed aggregate surface treatment shall be done in accordance with the requirements of Section 4.13, for installing new concrete sidewalk with saw cut type joints, except with the following modifications and additions:

A. SAMPLES.

Prior to the start of construction the Contractor shall submit the following to the Engineer for approval prior to ordering of materials and sample panels:

1. Sample of aggregates.
2. Sample of sealant.
3. Intended design mix by percentages.
4. Sample of foundation material.
5. Mock ups:
    a. The Contractor shall prepare sample test panels at least 4 foot x 4 foot x 4 inch in size of the proposed typical concrete sidewalk with exposed aggregate and saw cut type joints for the approval of the Engineer. These test panels or other approved markups shall be used to assess techniques, surface finish, distribution of aggregates, and consistency of finish.
    b. As many test panels shall be constructed as are necessary to achieve a sample panel that meets the satisfaction of the Engineer. Once an approved sample panel has been achieved, all previous disapproved sample panels shall be immediately destroyed. The approved sample panel shall be clearly marked with the words “approved sample”. All new sidewalk work shall conform in appearance to the approved sample panel to the satisfaction of the Engineer. The approved sample panel shall remain on site until all sidewalk work is complete, after which the

Contractor shall dispose of the sample panel unless the sample panel is a part of the finished work.

B. EXPOSED AGGREGATE SURFACE FINISH.

The minimum temperature required for pouring concrete sidewalk with exposed aggregate shall be 50 degrees F., unless otherwise directed by the Engineer.

The surface of the concrete sidewalk shall have an exposed aggregate finish. The exposed aggregate shall be seeded onto and then embedded into the surface of the concrete. Casting aggregate over the surface of the concrete and embedding them in the surface of the concrete is referred to as “seeding”.

The Contractor is responsible for ordering sufficient concrete mix to fully complete each sidewalk slab section (expansion joint to expansion joint). Cold joints and/or interrupted pours will not be accepted.

Concrete shall be placed and screeded to the finished level, although depending on the size and quantity of aggregate to be added the initial surface level may need to be slightly lower than the finished level. Selected aggregate shall be hand-cast or seeded onto the surface immediately after screeding and then bullfloated into the surface prior to bleedwater appearing, or apply to the surface once all the bleedwater has evaporated and fully embedded by tamping and repeatedly working the surface with wood floats. The top surface of sidewalk shall be finished to a true smooth plane. The exposed aggregate is to cover approximately 70% of the surface area to an embedded depth needed to achieve the coverage and mix

Surface retardant shall be applied in the amount and in a manner in accordance with the manufacturer’s instructions. The intent of the retarder is to also achieve a light sandblast texture finish.

Each rectangular slab shall have all edges neatly rounded with proper tools. Concrete shrinkage control joints shall be evenly and crispy scored or saw cut at designate locations, but not tooled, at locations shown on the Contract Drawings. Unless otherwise shown on the Contract Drawings, the shrinkage control joints in the concrete surface shall be one-eight (1/8”) inch wide and three-quarter (3/4”) inch deep and if saw cut shall be done immediately after the concrete has reached its initial set which is typically anywhere from 4 to 8 hours after the concrete has been poured, depending upon the weather, but in no case shall it be later than 12 hours after pouring. All saw cuts are to be straight, clean and of consistent width.

C. PROTECTION AND CURING.

The Contractor shall carefully protect the concrete from the drying effects of the sun and wind, pedestrian and/or other traffic, or other caused, by means of suitable guards and coverings.

After aggregate has been exposed the concrete shall be cured by covering it with new and unwrinkled, non-staining, high-quality curing paper conforming to ASTM C171, Sheet Material for Curing Concrete.

To seal and protect the exposed aggregate surface after curing, the clear sealer shall be applied as per the manufacturer’s instructions.

All exposed aggregate surfaces shall be thoroughly inspected to verify and approve installation and safety, including wet and dry slip resistance, before opening the sealed surface to traffic.

D. EXPANSION JOINTS

Unless otherwise directed by the Engineer and excluding sign and parking meter posts, expansion joints shall be installed at all joints between the sidewalk slabs and curb, street hardware, wood

poles, street light and traffic pole foundations, bollard foundations, hydrant foundation slabs, buildings, bridges, etc. Refer to contract drawings for location of expansion joints.

The top one (1”) inch shall be sealed with sealant poured on an approved backer rod in accordance with the manufacturer’s instructions.

PK-ESCR 028.5. MEASUREMENT.

The area of concrete sidewalk with special scoring and exposed aggregate surface treatment in **SQUARE FEET**.

In determining the area of Concrete Sidewalk to be paid for, the areas occupied by the tree wells, bases of columns, manhole heads, gate boxes and similar structures will be deducted from the measured area of concrete sidewalk when they measure more than one (1) square foot and will not be deducted when they measure one (1) square foot or less.

PK-ESCR 028.6. PRICES TO COVER.

The contract price per **SQUARE FOOT** and depth as indicated for **CONCRETE SIDEWALK WITH SPECIAL SCORING AND EXPOSED AGGREGATE SURFACE TREATMENT** shall cover the cost of all labor, materials, equipment, insurance, and incidentals required to construct concrete sidewalk of the thickness specified, exposed aggregate surface treatment, with saw cut joints and sealant, complete in place with subbase course material, in accordance with Section 4.13, including, but not limited to, curing, excavation (other than rock excavation) and backfilling, all in accordance with the plans and specifications to the satisfaction of the Engineer.

Where Concrete Sidewalk with Exposed Aggregate is designated to be reinforced, the cost of furnishing and installing the welded wire fabric shall be paid for separately under its own contract Item 4.14 Epoxy-Coating Steel Reinforcement.

Payment will be made under:

Item No.	**Item**	**Pay Unit**
PK-ESCR 028 B	6” CONCRETE SIDEWALK WITH SPECIAL SCORING AND EXPOSED AGGREGATE SURFACE TREATMENT (SAW CUT TYPE JOINTS)	S.F.

END OF SECTION

Section PK-ESCR 110 – INSTALL PLANT MATERIAL

WORK: Under this Item, the Contractor shall excavate all plant pits and install, plant, maintain, and replace all **PLANT MATERIAL** specified in the Plant Schedule, in accordance with the plans and specifications, or as directed by the Engineer.

The Contractor shall be liable for any damages to property caused by planting operations, and all areas and construction disturbed shall be restored to their original conditions, to the satisfaction of the Engineer.

NAMES: Plant names, size, and grading standards shall conform to those prepared by the American Standard for Nursery Stock (ANSI Z60.1- 2014) unless otherwise specified. Genus, species and cultivar are listed in accordance with the International Code of Nomenclature (ICN). No substitutions will be permitted except upon written permission of the Engineer as an approved equal.

ASIAN LONGHORNED BEETLE QUARANTINE ZONE REGULATIONS: Due to current Federal, State and NYC DPR policy, the following host species may not be planted in the quarantine zone. Host species are as follows: Acer-Maple, Aesculus-Horsechestnut/Buckeye, Salix-Willow, Betula-Birch, Populus-Poplar, Ulmus-Elm, Albiza-Mimosa/Silk Tree, CeltisHackberry, Fraxinus-Ash, Platanus-London Planetree, Sycamore, Sorbus-Mountain Ash.

In addition, Nurseries located within the quarantine zone shall comply with State and Federal Law and all Contractors and/or Subcontractors shall be Certified by the New York State Department of Agriculture and Markets to perform work within the Quarantine Zone (see Submittals section below).

QUALITY: All plants shall be typical of their species or variety. They shall have normal, well developed branches and vigorous fibrous root systems. They shall be sound, healthy, vigorous plants free from defects, disfiguring knots, sun scald injuries, dead or broken branches, abrasions of the bark, plant diseases, insect eggs, borers, and all forms of infestation. All plant material shall be tagged by the Engineer who shall reject all plant materials not meeting the above specifications, and trees having damaged or missing leaders, multiple leaders, Y-crotches, or indications of topping or heading back.

All plants shall be nursery-grown, unless otherwise stated. All trees and shrubs shall have been growing under similar climatic conditions as the project site two (2) years prior to the date of the contract. Plants held in storage will be rejected if they show signs of growth during storage. Collected plants shall be taken from a soil favorable to good root development. All collected material shall be clean sound stock, free from decaying stumps.

Herbaceous plants, vines, and groundcover shall be vigorous healthy plants, a minimum two (2) years old, from cuttings, seed, or division, with well-developed root systems and crowns, as specified in the Plant Schedule. Bulbs, corms, tubers and rhizomes shall be firm, non-desiccated, and certified free of disease and viral infection, of the sizes, grades, and varieties indicated in the Plant Schedule.

PLANT SOURCES FOR NATIVE PLANTS ONLY, WHERE APPLICABLE: Native plant material must be derived from the local genotypes of the native Plants specified. For purposes of this native plant material paragraph, “local” shall mean within 150 miles from the planting site. However, a reasonable effort shall be made to obtain sources of plant material as close to the planting site as possible. All plants must have been grown in a hardiness zone no warmer than Zone 7 or colder than Zone 6 as determined by the USDA Agricultural Research Service, Plant Hardiness Zone Map. Plant quality shall be typical of their species. Plant material should exhibit

the range of variation typical of local genotypes of the species as determined by the Engineer. They shall have normal branching and vigorous fibrous root systems. They shall be sound, healthy plants, free from sunscald injuries, or other mechanical injury, plant diseases, insect eggs, borers and all forms of infestations. All plants shall be nursery grown unless otherwise stated. Collected material will not be accepted. Except as may otherwise be specified in this native plant material paragraph, all other sections of this Plant Material specification shall also apply to the Native Plants. The native plant material, subject to availability and adherence to the requirements of this paragraph, may be purchased from the following nurseries or approved equal nurseries as determined by the Engineer in consultation with NYCDPR.

1. Greenbelt Native Plant Center, Staten Island, NY
2. Pinelands Nursery, Columbus, NJ
3. Sylva Native, Glen Rock, PA

ORDERING PLANT MATERIALS: The Contractor shall notify the Engineer of the unavailability of any tree, shrub, herbaceous plant, or bulb species designated in the contract, as well as provide confirmation to the Engineer of all orders from all sources of supply. Any request for species substitution due to unavailability must be submitted in writing Engineer, within thirty (30) days of the Order to Work date. The Contractor must include the names and addresses of at least ten (10) nurseries they have contacted in an effort to locate these species, and the list shall be submitted to the Engineer. All nurseries supplying material shall be required to have a certificate from the Department of Agriculture and Markets, Division of Plant Industry, New York, or any other state where plant material is obtained, certifying that plant material is apparently free of injurious insects and diseases.

DIMENSIONS: A plant shall be dimensioned as it stands in its natural position. Trees up to and including four-inch (4") caliper size shall be measured six inches (6") above ground level. Trees over four inches (4") in caliper size shall be measured twelve inches (12") above ground level. Stock furnished shall be a fair average of the minimum and maximum sizes specified. Larger plants cut back to sizes specified will not be accepted.

Container grown herbaceous plants, groundcover, and vines shall be well rooted in the container size indicated on the Plant Schedule, grown in the container at least one year prior to planting. Bulbs, corms, tubers and rhizomes shall be Top Size, or as indicated on the Plant Schedule. Annual flowering plants shall be vigorous, well rooted, with no indications of disease or stress.

PREPARATION OF PLANTS: All precautions customary in good trade practice shall be taken in preparing plants for moving. Workmanship that fails to meet the highest standards will be rejected. All plants shall be dug immediately before moving unless otherwise specified. All plants shall be dug to retain as many fibrous roots as possible. Balled and burlapped and balled and platformed plants shall have a solid ball of earth of minimum specified size, securely held in place by burlap and stout rope or twine. Oversized or exceptionally heavy plants are acceptable if the size of the ball or spread of roots is proportionately increased, to the satisfaction of the Engineer. Loose, broken, or manufactured balls will be rejected. Bare root plants shall be puddled immediately after digging by immersing the roots in a hydrogel slurry, so as to completely coat the roots.

DELIVERY: Plants shall be packed, transported, and handled with utmost care to ensure adequate protection against injury. When transported in closed vehicles, plants shall receive adequate ventilation to prevent sweating. When transported in open vehicles, plants shall be protected by tarpaulins or other suitable cover material. All bare root plants shall be adequately protected from drying out by covering the roots with a plastic bag and planting within 2 weeks of being dug. Balled and burlapped plants shall be set on the ground and the ball covered with soil.

Until planted, all material shall be properly maintained and kept adequately moist, to the satisfaction of the Engineer.

INSPECTION: Inspection may be made before digging if the Engineer directs, but no plant material shall be planted by the Contractor until inspected by the Engineer at the site of the work. Plant material will be rejected if delivered with broken or damaged root balls, or if damaged on site by rough handling. All rejected material shall be immediately removed from the site and replaced with acceptable material at no additional cost

PLANT SCHEDULE

The Plant Schedule is located in the Contract Drawings.

ABBREVIATIONS

Cal.	Indicates the caliper of the trunk of the tree.
B & B	Indicates tree or shrub to be “balled and burlapped”.
Cont.	Indicates tree, shrub or perennial to be delivered “container”.
B.R.	Indicates a tree or shrub to be delivered "bare root".
O.C.	Indicates "on center" or spacing between plants in all direction.
Ht.	Indicates overall height of tree.
*	Indicates plant as being native to the mid-Atlantic region.
(GI)	Recommended for Green Infrastructure / Rain Gardens
(OGI)	Recommended for Green Infrastructure / R.O.W. Bio-swales
Item No.	Indicates specific species of plant material, including a description. Example below: ITEM NO. Genus species, Plant Description

PLANT DESCRIPTION

TREES: All trees shall be B&B, major trees branched 6-7' from the ground, minor trees as specified. Caliper size shall be as indicated. Root ball size and height shall correspond to American Standard for Nursery Stock (ANSI Z60.1- 2014) standard for the specified caliper size. Where height is specified, root ball size shall correspond accordingly. Well-branched top and fibrous root system essential.

SHRUBS: Height shall be as indicated. Root ball or container size and number of canes shall correspond to American Standard for Nursery Stock (ANSI Z60.1- 2014) standard for the corresponding shrub height. Heavy root system, all shrubs shall be well branched to the ground.

VINES, GROUNDCOVER, AND HERBACEOUS PLANTS: Container size shall be as indicated on the plans. All plants shall have vigorous root systems and have grown in the container for at least one year prior to planting.

PLUGS: Plugs shall have vigorous root systems.

ANNUALS: Annual flowering plants shall be vigorous, well rooted, with no indications of disease or stress.

BULBS, CORMS, TUBERS AND RHIZOMES: All bulbs, corms, tubers and rhizomes shall be top size, firm, and non-desiccated.

PLANTING OPERATIONS:

TIME OF PLANTING: Unless otherwise directed by the Engineer, deciduous material shall be planted from March 1st to May 1st and from October 15th to December 15th. Evergreen material

shall be planted from April 1st to May 15th and from September 1st to October 15th, or as approved by the Engineer.

LOCATION: Site characteristics, such as overhead power lines, existing vegetation, and infrastructure items, such as curbs and sidewalks, shall be considered. Trees that grow taller than thirty feet (30') should not be planted directly under power lines. When the design allows, the tree leader shall be offset from power lines.

EXCAVATION OF PLANT PITS: Sizes of plant pits shall be as shown on the planting plan. Planting soil shall be unamended existing soil excavated from the planting pit, unless amendments, topsoil, or structural soil are specified elsewhere in the contract. When subsurface obstructions are encountered during excavation, the Contractor shall restore the disturbed area to its original condition.

All plant material in all planting applications should be checked to ensure the root crown has not been buried during containerization or balling and burlapping. If so, the excess soil should be removed and the plant set at the correct finished grade. The top of the root ball shall be set at finished grade.

Each tree shall be planted in an individual pit as specified. Pits for balled and burlapped, container material shall be dug as shown on the Standard Planting Details. The size of the root ball in diameter shall be deep enough so that the root ball sits on undisturbed subgrade, except in situations where curbs and/or adjacent pavements prevent achievement of planting pit dimensions. Sizes of restricted planting pits (i.e. street trees) shall be at the maximum width allowed, and the same depth as the root ball being planted. Any changes in the planting pit sizes shall be broad enough to accommodate the roots fully extended and only deep enough so that the uppermost roots will be just below the original grade.

No plant pits shall be dug until the proposed locations have been staked on the ground by the Contractor and approved by the Engineer. No plant pits shall be backfilled until planting is approved by the Engineer. Where directed, pits shall have sloped sides (or as per the Standard planting Details). Excavated material, when found to be unsuitable, shall be removed from the site and replaced with topsoil, as directed by the Engineer, and paid for under the Items, 6.02 AAN ‘Unclassified Excavation’ and ‘Topsoil’. Any amendment will be as directed and determined by the Engineer.

Extreme care shall be taken not to excavate to a depth greater than required. The subgrade below the root ball shall be tamped slightly to prevent settlement. Where, in the opinion of the Engineer, the subgrade material is unsuitable, the size of the plant pits shall be dug one-half (1/2) wider than normally required. The bottom and sides of the pit shall be backfilled with the existing soil, without amendments, and thoroughly worked into place to remove air pockets and voids.

Planting beds for Shrubs, Vines, Herbaceous, and Groundcover plants shall be excavated to the dimensions and depths indicated on the plans and backfilled with approved topsoil. Bulbs, Corms, Tubers, Rhizomes and Annuals shall be planted in the existing unamended soil or prepared planting beds with improved soil and/or a water absorbent medium, as designated on the drawings.

Planting beds that are installed within tree protection zones, can only be done in the presence of the Engineer. All excavation and plant installation is to be done by hand, with minimal soil disturbance where shown on plans. No existing tree roots shall be cut without written authorization from the Engineer. Plants shall not be placed within (three) 3 feet of the tree trunk.

Mycorrhizal Fungi Innoculant: Shall be applied by means of a three ounce (3 oz.) premeasured dry formulation packet, such as Mycor Tree Saver Transplant®, as manufactured by Plant Health Care, Inc., Pittsburgh, PA. Rhizanova Tree Transplant, as manufactured by Becker Underwood, Inc., Ames, IA, or approved equal. Packets shall contain, as a minimum: one thousand (1000) live spores of Vesicular-Arbuscular fungi, including: Entrephosphora columbiana, Glomus clarum, Glomus etunicatum, and Glomus sp.; seventeen million five hundred thousand (17,500,000) live spores of Ectomycorrhizal fungi (Pisolithus tinctorius); Biostimulant ingrediants including Yucca schidigera extract; soluble sea kelp extract derived from Ascophylum nodosum; humic acids; and acrylamide copolymer gel as a water absorbent medium. Mycorrhizal fungi inoculant shall be added to the top six to eight inches (6-8") of backfill soil in each planting pit and thoroughly mixed to distribute the inoculant. The material shall be applied according to the following chart:

Size of rootball or container	Ounces per plant
1 gallon	1
2 gal.	2
3 gal.	3
5 gal.	3
7 gal.	3
10 gal.	3
15 gal.	3
20" B&B	6
24" B&B	9
30" B&B	9
36" B&B	12
12" B&B	12

Water Retention Additive: Water Retention Additives shall be a granular polyacrylamide polymer of a potassium base and not a sodium base that slowly releases moisture into the root zone such as Terra Sorb, as manufactured by Plant Health Care, Inc., Pittsburgh, Pa., or approved equal. It shall be applied at the time of planting during a dry planting as defined by Parks and Recreation. When planting trees, each tree shall receive three (3) ounces or amount specified by product instructions.

Half should be added at a depth of 8-10 inches and the other half just below the finished surface. When planting shrubs, perennials or annuals, the product should be applied as per product instructions.

Planting: Shall be performed by a Contractor that is approved by the Engineer for planting work. No planting shall be done except in the presence of the Engineer. All material shall be inspected by the Engineer as it is removed from the truck, prior to placing in an approved storage area or the designated planting site. All rejected plant material shall be removed from the site and replaced with acceptable material at no additional cost to the City.

Bare root material shall be adequately protected from drying out. It shall be removed from its plastic bag and planted immediately after inspection. The bundles of heeled-in plants shall be set upright on the ground, covered with mulch, and kept adequately moist until the time of installation. Until the time of planting, all plant material shall be stored in an approved location, securely fenced and maintained, to the satisfaction of the Engineer, at no additional cost to the City. All plants not planted immediately shall be watered as necessary to maintain optimal health until planting.

Place balled and burlapped material in the prepared planting pit by lifting, and carry it by the rootball. Set the tree or shrub straight and in the center of the pit, with the most desirable side facing toward the predominant view. All material shall set, after settlement, at the same level at

which they have grown in the nursery. Care shall be exercised in setting the plants plumb. All ropes, stones, etc. shall be removed from the pit before backfilling. Soil for backfill shall be loose and friable and not frozen or compacted.

Cut and remove rope or wire from the top fifty percent (50%) of the rootball and cut off the burlap back to the edge of the ball. Remove as much woven product and twine as possible. All plastic or synthetic fabric must be removed from the ball at the time of planting. If root ball is enclosed by a wire basket, the Contractor shall cut away at least two-thirds (2/3) of the wire basket from the sides and top of the root ball. Remaining lateral wires must be cut to prevent future root interference. Galvanized or aluminum wire for will not be accepted.

Balled and burlapped plants shall be handled so that the ball will not be loosened. After the soil has been thoroughly firmed under and around the ball, the burlap shall be cut away from the upper half of the ball, and the remaining burlap adjusted to prevent the formation of air pockets. Soil shall be firmed at six to eight inch (6-8") intervals and thoroughly settled with water. Plants with exposed roots shall be placed in the proper position in the center of the pit after the soil in the bottom of the pit has been firmed. Roots shall be arranged in their natural position and existing soil worked in among them, firmed at intervals, and mycorrhizal inoculant and water retention additive worked into the top eight (8”) inches of backfill soil in the correct proportions. The plants shall then be thoroughly settled in with water. Care shall be taken to avoid bruising or breaking the roots when tamping the soil. All large and fleshy roots that are bruised or broken shall be pruned, making a clean cut before planting. <u>NOTE: No cuts of any root, including bruised or broken roots, shall be made except in the presence of the Engineer.</u>

Vines, Herbaceous, and Groundcover plants shall be carefully removed from containers or flats immediately prior to planting and set to the same depths as they were grown in the nursery bed or container, to the correct spacing indicated on the plans. Roots shall be arranged in their natural position and topsoil worked in among them, taking care to avoid bruising or damaging the roots, and fertilizer tablets added to the top four (4”) inches of backfill soil in the correct proportion for the respective pot size. No more than one hour after planting, all plants shall be thoroughly settled in with water.

Annual flowering plants shall be carefully removed from the flats or cell-packs to avoid damaging roots or stems and planted in prepared planting beds at the same depth they were growing in the containers. Soil shall be thoroughly firmed around each crown, and plants thoroughly watered in no longer than one hour after planting.

Bulbs shall be planted in the locations indicated on the plans and to the depths and spacing indicated on the Plant Schedule. Spring Flowering Bulbs, Corms, Tubers, and Rhizomes shall be planted in late September or October, no more than six (6) weeks before frost. Summer and Fall Flowering Bulbs, Corms, Tubers, Rhizomes and Plugs shall be planted in spring, after the last killing frost, or as directed by the Engineer. All of the above shall be planted according to best horticultural practice. Prior to planting, bulbs shall be stored in a cool, dry, well-ventilated location for no longer than two (2) weeks before planting.

FINISHING SURFACE AFTER BACKFILLING: The Contractor shall cultivate and rake over finished planting areas and shall leave the site in an orderly condition. On level ground or slight slopes in non-paved areas, a shallow basin a little larger than the diameter of the plant pit shall be left around each plant, as shown on the plans, or as directed by the Engineer. On steep slopes, the soil on the lower side of the plant shall be graded in such a manner that it will catch and hold water, as shown on the plans, or as directed by the Engineer. Upon completion of planting, all debris and waste material resulting from the planting operation shall be removed from the project area, and the affected area raked and cleaned as necessary.

All work done in preparing shallow basins or grading of plant pits on steep slopes and regrading and reseeding of plant saucers shall be deemed included in the unit price per plant. All berms raised for shallow basins in level or gently sloping grass areas shall be removed at the end of the guarantee period, as well as tree stakes. This topsoil shall be cast evenly over the surrounding grass areas and grass seed sown over the removed berms.

After the shallow tree basins and plant saucers and shrub beds have been prepared, they shall be mulched, three to four inches (3-4") in depth, inside and along the outside edge of the basins/saucers. Perennial beds shall be mulched to a two inch (2”) depth. Mulch shall consist of shredded bark not exceeding three inches (3") in length and one inch (1") in width. Mulch contaminated with leaves, twigs, and/or debris shall not be acceptable. Only mulch derived from tree material, not from wood waste products like sawdust, shall be acceptable. Mulch for tree pits and shrub and/ or perennial beds shall be included in the bid price.

STAKING: All staking shall be done immediately after planting and all stakes and wire shall be maintained. Plants shall stand plumb after staking. Stakes shall be of white cedar with bark attached. They may have a maximum allowable deflection of ten percent (10%). Stakes of the dimensions shown on the plans and details shall be placed outside the root ball and shall be driven to the depths indicated on the plans and details.

Ties shall be attached to the stake no more than four (4”) inches below the top of the stake. Stakes shall be fastened to the tree with double No. 12 gauge annealed galvanized steel wire run through a suitable length of new reinforced one-half inch (1/2") rubber hose or re-usable nylon tree ties as manufactured by Zip-It Tree ties, Riverside, CA, or approved equal. Stakes shall be set parallel to the contours, curbs, or walks, unless otherwise directed by the Engineer. For galvanized wire with rubber hose, the length of doubled wire between the tree and stakes shall be hand twisted several times prior to fastening to the stakes. The wires shall be tied off firmly at the stake, not crank twisted at the center. Trees shall stand plumb after staking. Stakes, wires and hosesor nylon tie shall be removed at the end of the guarantee period, unless directed otherwise by the Engineer and shall become the property of the Contractor. At the time the stakes are removed any holes left by the stake shall be filled with topsoil as specified in the “Topsoil” specification.

PRUNING: Dead, injured or diseased wood shall be removed in accordance with good horticultural practice. Crossed branches shall be pruned with a sharp tool in such a manner as to preserve and encourage the plant’s natural growth form. Do not cut leaders or use wound paint or dressing to treat cut areas. Additional pruning may be required as determined by the Transplanting Subcontractor to preserve aesthetic balance. Any pruning shall preserve the natural character of each plant and shall be done in a manner appropriate to its particular requirements. Any crown pruning shall be done during the transplanting season and may be performed either before or after transplanting, at the Subcontractor’s discretion. If done before transplanting, additional pruning may be required to correct any damage incurred during the transplanting

operation. In no case shall leader branches be removed or harmed. The crowns of young trees should not be cut back to compensate for root loss.

EDGING OF PLANTING AREAS: The Contractor shall establish a neat edge where planting areas meet grass areas, as shown on the plan or as directed by the Engineer. Edging shall be done by competent mechanics in a professional manner with a spade or edging tool immediately after all planting and seeding is completed. Particular care shall be exercised in edging to establish good flowing curves, as shown on the plan or as directed by the Engineer. Edging shall be maintained by the Contractor until Substantial Completion.

MAINTENANCE: At the time of planting, the soil around each plant shall be thoroughly saturated with water, and as many times later as seasonable conditions require, until Substantial Completion. Where water is supplied from City hydrants, the Contractor shall obtain a hydrant permit from the Department of Environmental Protection.

The Contractor must have all tools necessary for using City hydrants in the Contractor's possession at time of planting to ensure that this specification is adhered to. If conditions do not allow the use of New York City water sources, the Contractor must obtain their own source of water. No direct payment shall be made for water obtained from other than city sources, but the cost thereof shall be deemed included in various Items of the contract.

Maintenance shall include watering, weeding, cultivating, edging, control of insects, fungal infections, and other diseases by means of spraying with an approved insecticide or fungicide, pruning, adjustment and repair of stakes, anchors, and wires, repair of minor washouts and gullies up to twelve inches (12") in depth, and other horticultural operations necessary for the proper growth of all trees, as well as replacement of plants stolen or vandalized prior to Substantial Completion, to a degree judged sufficient for replacement by the Engineer. The Contractor shall also be responsible for keeping the entire area within the contract limits neat in appearance until Substantial Completion. All planting areas shall be watered, cultivated, and weeded with hoes or other approved tools within the growing season extending from May 1st to October 1st, and such cultivating and weeding shall be repeated at least once a week. Under no condition shall weeds be allowed to attain more than six inches (6") of growth. The cost of such maintenance shall be included in the bid price.

REPLACEMENT: The Contractor shall replace, in accordance with the contract plans and specifications, any plant material that is dead or, in the opinion of the Engineer, in an unhealthy or unsightly condition, and/or have lost their natural shape due to dead branches, excessive pruning, inadequate or improper maintenance, vandalism or other causes, prior to Substantial Completion. Replacement plants shall be installed in the following planting season. The cost of replacements(s) shall be included in the unit price bid for the various furnished items of the contract.

Where vandalism or related causes are agreed by the Engineer as the cause for plant material replacement, the Contractor shall not be responsible for replacement during the guarantee period.

Where dead plant material has been identified, whether due to natural causes or vandalism, the Contractor shall remove the dead material, including stakes, and wire (if applicable) **within three (3) weeks of notification.** Earth will be leveled and new topsoil and seed, or appropriate paving material, added at the direction of the Engineer to eliminate any hazardous conditions.

The Contractor shall maintain Replaced Plant Material to the standards outlined in the "Maintenance" subsection above.

SUBMITTALS: All submittals shall be as per the S-Pages.

Nursery: The Contractor must submit the name and address of all nurseries suppling plant material for review and approval prior to performing work.

State Certification (in quarantine zone only): The Contractor shall submit a copy of a valid Compliance Agreement issued by the State of New York Department of Agriculture and Markets, Division of Plant Industry for review and approval prior to performing work.

Invoice: The Contractor shall submit an original invoice for all plant material delivered to the site. The invoice(s) must be on the Nursery letterhead and must indicate genus and species along with the quantity and size for each individual plant material delivered to the site.

MEASUREMENT AND PAYMENT: The quantity of **PLANT MATERIAL** to be paid for under these Items shall be the number of trees, shrubs, vines, herbaceous plants, groundcovers, and bulbs of each size planted and maintained, in accordance with the plans and specifications, to the satisfaction of the Engineer.

The price bid shall be a unit price per **EACH** tree, shrub, vine, herbaceous plant, groundcover, bulb, corm, tuber, rhizomes or plug of each size, as specified in the Plant Schedule, and shall include the cost of furnishing plants, excavation, mycorrhizal innoculant, water retention additive, shredded bark mulch for tree pits, shrub beds, and perennial or groundcover beds, inspecting, planting, staking, anchoring, watering, replacing, and maintaining all plant material and all work incidental thereto, in accordance with the plans and specifications, to the satisfaction of the Engineer.

All plant material substitutions must be pre-approved as described in “Ordering Plant Materials”. Approved substitutions where size and/or description vary from that listed in the Plant Schedule included herein may result in a monetary credit due to the City.

Topsoil, and compost, where called for in the plans or details, will be paid for separately under their respective Items. Shredded bark mulch beyond the tree pit and shrub or perennial bed outlines shall be paid for separately under the Item ‘Shredded Bark Mulch’. The price of water, regardless of source, is deemed included in the unit price bid. No extra payment will be made for water coming from the Contractor’s own source.

Payment will be made under:

Item No.	Item	Pay Unit
PK-ESCR 110 D30-36	SHRUB 30-36 IN. HEIGHT	EA

END OF SECTION

SECTION PK-ESCR 149 – GEOTEXTILES – SEPARATION

WORK: Under these Items, the Contractor shall furnish and install **GEOTEXTILE - SEPARATION** in accordance with the plans and specifications, as directed by the Engineer.

MATERIALS:

Fibers used in the manufacture of geotextiles, and the threads used in joining geotextiles by sewing, shall consist of long-chain, synthetic polymers, composed of at least 95 percent by weight polyolefins, polyesters, or polyamides. The geotextile and the threads used in sewing geotextiles, shall be resistant to chemical attack, rot, and mildew. The geotextile shall have no tears or defects which adversely alter its physical properties. They shall be formed into a stable network such that the filaments or yarns retain their dimensional stability relative to each other, including selvages. The geotextile shall have no tears or defects which adversely alter its physical properties. The separation and stabilization applications shall be as specified below:

GEOTEXTILE - SEPARATION APPLICATION: Separation application is defined as the placement of a flexible porous geotextile between dissimilar materials so that the integrity and functioning of both materials can be maintained or improved, but where water seepage through used in separation applications shall conform to the following AASHTO-M-288 properties for separation geotextiles:

Structure	ASTM Test	Woven	Non-Woven
Elongation	D4632	< 50%	≥ 50%
Grab Strength (Minimum)	D4632	1100 N (247 LBF)	700 N (157 LBF)
Tear Strength (Minimum)	D4533	400 N (90 LBF)	250N (56 LBF)
CBR Puncture (Minimum)	D4833	4000 N (900 LBF)	1820 N (410 LBF)
Permitivity (Minimum)	D4491	0.02 / sec.	0.02 / sec.
Apparent Opening Size (Maximum)	D4751	0.6 mm (0.023 inch) Std. No. 30 sieve	0.6 mm (0.023 inch) Std. No. 30 sieve

Geotextile used in separation applications shall be FX-66 (woven) or FX-60HS (nonwoven) manufactured by Carthage Mills, Cincinnati, OH, or 600X (woven) or 160N (nonwoven) as manufactured by Mirafi, Inc., Pendergrass, GA, or TerraTex HD (woven) or TerraTex N06 (nonwoven) as manufactured by Hanes Geo Components, Winston Salem, NC or approved equal.

INSTALLATION: For separation and stabilization applications the ground shall be prepared by removing stumps and other organic material, along with any large boulders and sharp objects which may tear or damage the fabric. After the ground has been prepared, the fabric shall be rolled directly on the ground. All seams shall be overlapped approximately six (6”) inches. No equipment, materials or machinery shall be placed on or be transported over exposed fabric. Topsoil backfill or other clean fill shall then be carefully placed to prevent dislocation of the fabric.

If the fabric is damaged during installation, the rupture shall be removed and the damaged area shall be covered with a patch of new fabric which will overlap the undamaged fabric approximately

six (6”) inches in all directions. All repaired fabric surface costs will be deemed part of the price bid.

SUBMITTALS: All submittals shall be submitted prior to purchase and in accordance with the requirements of the S-Pages.

Manufacturer’s Data: The Contractor shall submit manufacturer’s data with sufficient detail to demonstrate compliance with the requirements of this specification.

Samples: The Contractor shall furnish two labeled (2) samples, six inch by six inch (6” x 6”) minimum, of the geotextiles intended for use in the work for approval and the Engineer’s use. The label shall include the manufacturer’s product name, the type of fabric, and the weight of grade of the material. Geotextiles used in the work shall conform to the approved samples.

MEASUREMENT AND PAYMENT: The quantity of Geotextiles to be paid for shall be the number of **SQUARE YARDS** of **GEOTEXTILE - SEPARATION** required, measured in its final position, furnished and installed in accordance with the plans and specifications and the directions of the Engineer.

The price bid shall be a unit price per **SQUARE YARD** of each type of Geotextile installed and shall include the cost of furnishing all labor, material, equipment, submittals, and incidental expenses necessary to complete the work in accordance with the plans, specifications, and to the satisfaction of the Engineer.

Excavation, topsoil, or borrowed fill shall be paid for separately under their respective contract items.

Payment will be made under:

Item No.	Item	Pay Unit
PK-ESCR 149	GEOTEXTILES–SEPARATION	S.Y.

END OF SECTION

SECTION PK-ESCR 156 – BICYCLE RACK – HOOP

WORK: Under this Item, the Contractor shall furnish and erect BICYCLE RACK - "HOOP" in accordance with the plans, specifications, and directions of the Engineer.

INTENT: This specification is intended for bicycle rack installation within NYC Parks property as well as the Public Right of Way under the jurisdiction of NYCDOT, but ordering procedure varies as described below.

MATERIALS: Unless otherwise specified herein, all materials and methods of construction shall conform to applicable portions of the NYCDOT Standard Highway Specifications.

Bicycle Rack – "Hoop": The bicycle rack shall be the NYCDOT – NYCityRack, a trademarked design of the City of New York. The bicycle rack is constructed of cast ductile iron ASTM grade A536.

NYCDOT owns the intellectual property rights to the CityRack design. The NYCDOT contractually authorized manufacturer is Campbell Foundry Company, Harrison, NJ or the latest authorized manufacturer/supplier, as applicable.

No order can take place without authorization from the Engineer, in consultation with NYCDOT Director of CityRacks. The Director of the CityRacks Unit will issue an authorization letter so the Contractor may purchase CityRacks. Contractor will place orders with NYCDOT's authorized manufacturer/supplier only.

ORDERING PROCEDURE: Contractor shall contact the Director of City Racks for bid prices and to receive a purchase authorization letter. The Contractor shall supply the following information to the Director of City Racks a minimum of two months but no earlier than six months prior to desired delivery date:

FOR INSTALLATIONS ON PARK PROPERTY:

1. Contractor shall e-mail the number of CityRack units to be purchased for installation on Parks Property (verify that none will be installed on Public Right of Way), and
2. Provide the name of the Contractor, name of the Park, Park location and Parks contract number, and
3. Copy the Engineer in such e-mail.

FOR INSTALLATIONS ON PUBLIC RIGHT OF WAY:

1. Contractor shall e-mail the number of CityRack units to be purchased for installation on the Public Right of Way sidewalk (verify that none will be installed on Parks Property), and
2. Submit layout plan, marking exact location on sidewalk where bike rack(s) are shown using a thick pencil or marker and
3. Provide the name of the Contractor, name of the Park, Park location and Parks contract number, and
4. Copy the Engineer in such e-mail.

NYC-Department of Transportation
Director of City Racks, Bike Parking / Public Space Unit
Transportation Planning & Management
55 Water Street, 6th Floor | New York, New York 10041
Kenneth Lewis, Director Klewis@dot.nyc.gov (212) 839.7241 Office phone

Hardware: Mushroom head spikes for surface mount shall be either stainless steel, of the sizes shown on the Detail. Spikes will be provided by the manufacturer.

Concrete: Concrete pavement or piers shall be installed as shown on contract drawings.

EXECUTION: All Bicycle Racks shall be installed in locations as shown on the contract plans. Bicycle rack layout and details shall be as shown on the contract drawings.

Surface Mount: Bicycle rack shall be installed in their final location and properly secured in place. Holes shall be drilled into the concrete, in accordance with the detail. Base plate shall be secured with four (4) mushroom head spikes driven into the pre-drilled hole.

SUBMITTALS: All submittals shall be in accordance with the requirements of the S-Pages.

Contractor shall submit authorization letter from NYCDOT.

MEASUREMENT AND PAYMENT: For furnishing and installing **BICYCLE RACK - "HOOP"** complete in accordance with the plans and specifications and directions of the Engineer, the Contractor shall receive the unit price bid.

The price bid shall be a unit price for **EACH** Bicycle Rack - "Hoop" and shall include the cost of all labor, materials, equipment and incidental expenses necessary to complete the work including obtaining purchase authorization letter, hardware, all in accordance with the plans and specifications to the Satisfaction of the Engineer.

Excavation and concrete shall be paid for separately under their respective contract items.

Payment will be made under:

Item No.	Item	Pay Unit
PK-ESCR 156	BICYCLE RACK – "HOOP"	EA

END OF SECTION

SECTION PK-ESCR 605 – 4" DIA. DUCTILE IRON CEMENT WATER PIPE LINE

WORK: Under this Item, the Contractor shall furnish and install CEMENT LINED DUCTILE IRON WATER PIPE, of the size shown, in accordance with the plans, specifications and the directions of the Engineer.

MATERIAL: Pipe shall be Ductile Iron Pipe meeting requirements of A.N.S.I. Specifications A-

21.51 and A.W.W.A. Specifications C-151. Water pipe shall be Class 52 for 3" and 4" diameter and Class 56 for all pipes greater than 4" diameter.

All pipe shall be cement-mortar lined in conformance with A.N.S.I. 21.4. The exterior surface of pipe shall receive a standard foundry coal tar dip coating. Cement Lined Ductile Iron Water Pipe shall consist of bell and spigot type Ductile Iron Pipe Tyton Joint sections with Field Lock Gasket Joints, similar or equal to that manufactured by the U.S. Pipe & Foundry Co., Birmingham, AL, and shall conform to the American National Standards Institute C151 and American Water Works Assoc. A21.51., Thickness Class 52 and better. Pipe shall be laid true to line and grade with bells upstream and shall have a full, firm and even bearing on a bed of broken stone, as shown in the details.

Dielectric fittings/flanges shall be used where there is connection between dissimilar metals. All elbows shall be rodded in accordance with the specifications of the Dept. of Environmental Protection, Bureau of Water Supply.

CONNECTIONS: The Contractor shall do all the work necessary to join the Ductile Iron Pipe to the existing water lines as shown on the plans. The cost for doing this shall be included in the unit price bid for this item.

TESTS: The Contractor shall not backfill over any pipe until ordered by the Engineer. The pipe system shall be tight and show no leaks when filled with water, sealed and subjected to an internal hydrostatic pressure of one-hundred twenty-five (125) pounds per square inch. Temporary caps shall be placed where required to permit making the tests where valves are not available. The tests shall be made in the presence of the Engineer.

MEASUREMENT & PAYMENT: The quantity of **CEMENT LINED DUCTILE IRON WATER PIPE** to be paid for under this item shall be the number of **LINEAR FEET** (laying length) of each size pipe, including fittings, furnished and incorporated, in accordance with the plans, specifications, and the directions of the Engineer.

The price bid shall be a Unit Price per **LINEAR FOOT** of laying length of Cement Lined Ductile Iron Water Pipe of each size shown, and shall include the cost of all labor, materials, and equipment necessary to complete the Work, including fittings, in accordance with the plans and specifications, to the satisfaction of the Engineer.

Where fittings connect different sizes of pipe, the fittings shall be included in quantity measured for larger size.

Excavation and broken stone shall be paid for separately under their respective contract

items.

Payment will be made under:

Item No.	Item	Pay Unit
PK-ESCR-605	4” DIA. Ductile Iron Cement Water Pipe Line	LF

END OF SECTION

SECTION PK-ESCR 609 – WET CONNECTION – 4" DIA.

WORK: Under these Items, the Contractor shall make a **WATER TAP** or **WET CONNECTION** of the size shown on the plans, to the existing water main in accordance with the plans, specifications, and directions of the Engineer. The Contractor shall obtain a permit from D.E.P, saw cut pavement, prepare opening, abandon, disconnect, cap, or plug any existing water service from the existing water main in accordance with the Rules of the Bureau of Water Supply, arrange D.E.P. installation, arrange inspection (where required) prior to backfilling and restore street pavement.

PERMITS: The Contractor shall employ a licensed Certified Master Plumber to obtain a permit from the New York City Department of Environmental Protection, Bureau of Water Supply and Wastewater Collection, Tapping Division, hereinafter referred to as D.E.P. All permits for work requiring opening or obstructing a street and/or sidewalk shall be contingent on approval by the Department of Transportation (DOT) or the agency having jurisdiction to authorize such opening. All permits shall be displayed at the work site.

MATERIALS & EXECUTION: The Contractor shall notify the Engineer three (3) days prior to intended date of work. Water taps and wet connections to a City Main shall be inserted or installed only by D.E.P employees, unless waived by D.E.P. The Contractor shall set up appointment with D.E.P and pay all D.E.P. fees under this item. The Contractor shall erect proper barricades and all other protective devices in strict compliance with City ordinances governing the protection of the public. All materials, excavation, saw cutting, and restoration of street pavement (where applicable) shall be performed in accordance with D.E.P. and New York City Department of Transportation requirements. Size of excavation for water tap or wet connection shall be in accordance with the requirements of NYC Department of Environmental Protection "Rules governing and Restricting the Use and Supply of Water" Appendix Table #4 and Detail Figure No.1. If subsurface conditions prevent a plumber from making an excavation of the dimensions indicated therein, the plumber shall immediately notify the Engineer. The Engineer, in turn shall notify D.E.P., who has the discretion to determine whether the dimensions should be changed, and what the new dimensions for the excavation shall be. Where excavations are required to be larger than Appendix Table #4, such excavation shall be paid separately under the item "Unclassified Excavation". All excavations shall be made safe by sheeting and bracing, where depth of excavation exceeds five (5) feet. Hand excavate as necessary to protect underground utilities. Arrange for inspection by D.E.P. (where necessary) prior to compacting backfill in six (6") inch lifts and street pavement restoration.

INSPECTION: Where required by D.E.P., the connection shall be inspected prior to backfilling.

MEASUREMENT AND PAYMENT: For each **WATER TAP** or **WET CONNECTION** made in accordance with the plans, specifications, directions of the Engineer and provisions of the D.E.P. permit, the Contractor shall receive the unit price bid.

The price bid shall be a unit price for **EACH** Water Tap or Wet Connection made and shall include furnishing all labor, material, equipment, and incidental expenses including obtaining permits, saw cutting, gooseneck connection for copper water tubing, unclassified excavation and/or hand

excavation as required, all fees to D.E.P., backfilling and compaction to complete the work in accordance with the plans and specifications, to the satisfaction of the Engineer.

Excavation beyond what is required by D.E.P. Appendix Table #4, Cap water line, Maintenance and protection of traffic, Restoration of Street Pavement, water line beyond the gooseneck connection, and Temporary Sheeting (where applicable) shall be paid under separate contract items.

Payment will be made under:

Item No.	Item	Pay Unit
PK-ESCR 609	Wet Connection – 4” DIA.	EA

END OF SECTION

SECTION PK-ESCR 610 – GATE VALVE – MECHANICAL JOINTS – 4" DIA.

WORK: Under these Items, the Contractor shall furnish and install **GATE VALVES - MECHANICAL JOINTS** of the sizes shown on the Plans, in accordance with the plans, specifications, and directions of the Engineer.

GATE VALVES: Shall be U.S Pipe Model # USP1-20 Mechanical joint ends (with accessories unassembled), or approved equal, with Non-rising stem (NRS), Meets or exceeds all applicable requirements of ANSI/AWWA C515 Standard, UL 262 Listed, FM 1120/1130 Approved, and certified to ANSI/NSF 61 & 372, Standard mechanical joint ends comply with ANSI/AWWA C111, Nominal 10 mils Pro-Gard® Fusion Bonded Epoxy coated interior and exterior surfaces. Epoxy coating meets or exceeds all applicable requirements of ANSI/AWWA C550 Standard,

Iron wedge, symmetrical & fully encapsulated with molded rubber; no exposed iron, Triple O-ring seal stuffing box (2 above the thrust collar and 1 below), 2" square wrench nut–-open left or open right, 350 psig (2400 kPa/24 barg) maximum working pressure, 700 psig (4800 kPa/48 barg) static test pressure, UL Listed, FM Approved: 350 psig (2400 kPa/24 barg), Designed for potable water applications

EFFECTIVE JAN. 4TH, 2014, ALL PROPOSED INSTALLATIONS/ REPAIR OF VALVES TO BE UTILIZED ON ALL DOMESTIC DRINKING WATER SERVICES FOR HUMAN CONSUMPTION, MUST BE LEAD-FREE IN COMPLIANCE WITH THE AMENDED FEDERAL LAW, SAFE DRINKING WATER ACT (SDWA).

OPERATING KEY: An approved operating key of proper size for each valve shall be furnished by the Contractor except that the Contractor need not furnish more than two (2) keys for each size or kind of valve regardless of the quantity of valves called for in the Contract.

SUBMITTALS: Provide Product Data including Manufacturer's catalog sheets and specifications for each valve type. List type of valves, manufacturer's model number, and size for each service application.

MEASUREMENT & PAYMENT: The quantity of **GATE VALVES - MECHANICAL JOINTS** to be paid for under these Items shall be the number of valves of each size, furnished and installed in accordance with the Plans and Specifications and directions of the Engineer.

The price bid shall be a unit price for **EACH** valve of each size, and shall include the cost of all labor, materials, equipment and incidental expenses necessary to complete the work in accordance with the plans, specifications, and to the satisfaction of the Engineer.

Excavation shall be paid for separately under its own item.

Payment will be made under:

Item No.	Item	Pay Unit
PK-ESCR-610	Gate Valve - Mechanical Joints - 4" DIA.	EA

END OF SECTION

SECTION PK-ESCR 646 – MISCELLANEOUS IRON AND STEEL

PK-ESCR 646.1. **WORK:** Under this item, the Contractor shall furnish and place all cast iron, cast steel, wrought iron and steel, not especially included under other items, as shown on the plans and for miscellaneous castings, etc.

PK-ESCR 646.2. **MATERIALS:** All materials shall meet the requirements as given in NYCDOT Standard Highway Specifications or as directed by the Engineer.

PK-ESCR 646.3. **CLEANING:** Except otherwise ordered by the Engineer, immediately prior to the final inspection the Contractor shall clean unimbedded surfaces that show evidence of loose mill scale, non-adherent rust, peeling paint and other deleterious matter in accordance with SSPC SP2, Hand Tool Cleaning, a method generally confined to wirebrushing, sandpaper, hand scrapers or hand impact tools.

PK-ESCR 646.4. **MEASUREMENT AND PAYMENT:**

The quantity of **MISCELLANEOUS IRON AND STEEL** to be paid for under this item shall be the number of **POUNDS** furnished and placed in accordance with the plans, specifications, and directions of the Engineer.

The price bid shall be a unit price per **POUND** and shall include the cost of all labor, materials, equipment and incidental expenses necessary to complete the work in accordance with the plans and specifications, to the satisfaction of the Engineer.

Payment will be made under:

Item No.	Item	Pay Unit
PK-ESCR 646	MISCELLANEOUS IRON AND STEEL	LBS.

END OF SECTION

SECTION PK-ESCR 674 – 4" DIA. HOT DIPPED/HEAVY GAUGE GALVANIZED RIGID STEEL CONDUIT

GENERAL: Furnish and install hot-dipped galvanized rigid, steel conduit for exterior underground branch circuit to in compliance with National Electrical Code and NYC Electric Code.

The item shall include the labor material and equipment for installation of conduit with all required accessories such as couplings, bends, elbows, nipples, unions, reducers, strap screws, bolts, nuts, anchors, etc. All the work shall be done in compliance with code requirement. All associated material for complete installation of conduit shall be included under each item.

SPECIFICATIONS FOR CONDUIT:

1] Conduits installed shall be heavy gauge rigid galvanized steel for exterior underground.
2] All fittings for galvanized metal conduits shall be of an approved type and shall be malleable iron castings, hot dipped galvanized. Conduit fittings shall be provided with gasket and metal covers and shall be equal to Crouse-Hinds Form 8.
3] Conduits shall be free from blisters, cracks or injurious defects and shall be reamed at each end. All bends shall be of a long sweep free from kinks and of such easy curvature as to permit the drawings in of cable without injury.
4] Conduit ends, except for threaded cast boxes, shall extend into pull or junction boxes, one and one-half inch (1½") and be equipped with approved bronze ground bushings. Locknuts and bushings shall be provided where conduits terminate in metallic boxes.
5] Conduits shall be of the sizes noted on Contract Drawings which are indicated as the nominal inside diameter and shall be of standard weight and equal in quality as called for in the Standard Specifications of the American Society for Testing Materials. Minimum size conduit shall be ¾". Each length of conduit shall bear the manufacturer's Trademark or Stamp.
6] Conduits shall have standard conduit threads, clean cut, straight and true. The threads shall be protected during transit and installation, and shall be of sufficient length to permit the proper coupling connections as noted heretofore.
7] Contractor shall be responsible for all excavation, backfilling, and restoration necessary for the installation of both the exterior and the interior conduits as shown on drawing.
8] Long running threads will not be permitted on any part of the work.
9] All capped conduits shall be provided with a galvanized cast iron cap securely screwed into a clean cut factory threaded end of conduit.
10] When necessary to connect conduits in other than the regular manner, Contractor shall use "Erickson" or similar couplings, or approved equal.
11] All conduits which are installed underground shall be not less than twenty-four inches (24") below final grade, unless otherwise indicated on the Contract Drawings.
12] Conduit bends shall be made without kinking conduit or appreciably reducing the internal diameter. All bends in conduit of 2 inch size or larger shall be made with a hydraulic or power pipe bender. The radius of the inner edge of any field bend shall be not less than six (6) times the normal diameter of the conduit. Where changes of directions are necessary, long gradual sweeps shall be installed rather than short bends. Pull boxes shall be installed as required to provide a maximum of two (2) right angle bends between pulling points.
13] The Contractor shall bend conduit as required to avoid interferences and provide proper clearance.

14] Where conduits pass through foundation walls, concrete or floors, O.Z. Type "FSK" fitting or approved equal, of proper diameter, shall be installed.

15] Conduits and fittings shall be manufactured by Allied, Triangle, Crouse-Hinds Company, or approved equal.

16] The Contractor shall test and clean all conduits installed under this Contract and all existing conduits to be re-used by pulling a test ball and brush of approved size through each conduit. If any obstructions remain so that the cleaning devices cannot be rodded or pulled through clearly, the conduit shall be replaced. After testing and cleaning, each spare conduit shall be left with a ½" nylon pull line in the conduit. Each spare conduit shall be sealed by the use of "Duxseal", or approved equal, at the manholes.

17] To seal cables inside conduits entering and leaving manholes, apply untarred, unoiled jute packing around outside of and in the crotch between the cables in such a manner as to completely fill the duct. Use short pieces of the jute (2" to 6") and pack them tightly. Insert approved duct sealing material, taking care to secure a perfect bond around edge of conduit and cables. Cables shall be kept apart from edge of conduit by sealing material.

MEASUREMENT & PAYMENT: Payment will be made at the unit price bid for the total length in linear feet of **HOT-DIPPED/ HEAVY GAUGE GALVANIZED RIGID STEEL CONDUIT** actually installed as measured in the field along the longitudinal axis of each length of conduit by the Engineer.

The price bid for this item shall be a unit price per linear foot of **HOT-DIPPED/ HEAVY GAUGE GALVANIZED RIGID STEEL CONDUIT** shall include the cost of furnishing all labor, materials, and equipment to install, secure in place, clean and mandrel the conduit runs shown on the drawings. Conduit shall be installed complete with all couplings, fittings, bushings, sweeps, elbows, spacers, tie wire, drag lines and fiber plugs, straps, splice and junction boxes, etc.

Payment will be made under:

Item No.	Item	Pay Unit
PK-ESCR-674	4" DIA. Hot Dipped/Heavy Gauge Galvanized Rigid Steel Conduit	LF

END OF SECTION

SECTION PK-ESCR 679 – ELECTRICAL MANHOLES

GENERAL: Under this item the contractor shall furnish and install concrete manholes, cast iron frame and cast iron cover with all required accessories in compliance with park standard details.

The concrete boxes shall be made of pre-cast reinforced concrete. The box shall include cast iron frame and cover.

The contractor shall refer to Con-Edison standard for M11-6 manhole for construction details. All work shall be done in compliance with the standard details and specifications given on the above drawing.

The item title dimensions shown are clear inner dimensions of the concrete box. Overall dimension shall be larger for walls and bottom thickness of the box. All non-current carrying metal components within the box shall be bonded to ground as shown on the drawings in compliance with National Electrical Code. All ground bonding connections shall be included under this item.

These concrete boxes shall be furnished with required knockouts for conduit entrances. All unused knockouts shall be sealed with waterproofing concrete mixture.

EXCAVATION: The excavation and backfill for this item is not included in this item. Contractor shall under this item, cut, dig or drill trenches or pits to install manholes. Contractor shall also ensure that spaces around manholes are restored to **original** (condition immediately prior to commencement of work) or better condition.

CONSTRUCTION

1] **Construction:** Precast concrete or field constructed as detailed on the drawings. Floors to be free of pockets to slope ¼" per foot to drain points. Refer to Parks Standard Details Sheet #65 for additional Details.

2] **Drains:** Cast iron, slotted or perforated, hinged cover, 9" dia., 4" outlet, with a short length of outlet pipe terminating in a drywell below the floor.

3] **Frame & Cover:** Cast iron, with sizes indicated on Drawings, heavy duty roadway type. Cast iron of uniform quality free from blowholes, hard spots, shrinkage distortion or other defects. Cast iron shall be well cleaned by shot blasting and coated with asphalt paint resulting in a smooth, tough and tenacious coating; conform to ASTM spec. for gray iron.

Manufacture castings true to pattern, of non-rocking design or shall have bearing surfaces machined to prevent rocking and rattling.

Units shall meet AASHTO H20 wheel loading requirements. Manufacture, workmanship and certified proof-load tests shall conform to ASASHTO M306-89.

A. Cast iron: ASTM A48, Class 30B or 35B.

B. Frames:

Round, 6-1/2 inches high.

Minimum bearing area of the flange on the masonry: 645 sq. inches.

Minimum weight: 156 lbs.

C. Covers:

Round, approximately 1-1/2 inches thick at the perimeter bearing surface.

Minimum one inch wide perimeter bearing surface.

Perforaced checkered surface design.

Concealed type pick holes.

Minimum weight: 215 lbs.

4] **Covers:** Indented solid top design, with two drop handles; cast integral letters at least 2" high reading " N.Y.C. Parks Electrical" on upper side.

5] **Accessories:** Provide embedded inserts in manholes walls for cable racks. Provide pulling-in irons in walls opposite each duct bank entrance and in floor opposite pullbox opening. Pulling-in irons shall be securely fastened to reinforcing bars. Provide racks at 3' centers on pullbox perimeter, to be clear or present and future conduit entries. Provide racks and a set of porcelain insulators for per set of cables for each entering conduit.

6] **Grounding:** Wherever continuous ground wire from system grounding is not available for bonding, providing a ¾" driven copperclad ground rod, at least 10' long or as required to reach ground water. Extend top 6" above manhole floor. Connect all non-current carrying metal parts in the pullbox to the ground rod with a #6 AWG bare copper conductor with exothermic welds.

Manholes Containing Feeder Circuits Over 600 Volts:

A. Install rod electrode in each manhole near a wall. Install rod electrode thru floor into earth below manhole with 4 inches protruding for ground connection.

B. Bond manhole cover frame, steel cable support assemblies and splices (cable shields for non-lead type cables) to rod electrode with No. 6 AWG bare copper ground conductor.

C. Make connection to rod electrode with exothermic type weld or compression connectors.

7] **Installation:** Set manhole to approximate grade using a minimum of a 24" deep brick throat. Add or remove bricks as required to achieve final cover elevation.

8] **Cable Racks:** Provide fiberglass cable racks in all pullboxes for supporting cables. Cable

Support Assemblies (Steel): A.B. Chance Co.'s 1225 rack, 1231 Series support arms, 1121 porcelain insulators, or McGraw-Edison's DU10B Series rack, DU9S Series support arms, DE12U porcelain insulators.

Cable Support Assemblies (Nonmetallic): Underground Devices Inc.'s CR36 rack, RA Series support arms.

A. Depth: Install manholes at depth required to bring top of manhole covers 2 inches above finished grade in lawns, and flush with paved surfaces of walks, roads, or parking spaces.

B. Bricked-Up Throat: Mortar brick into place. Set manhole frame with mortar. Waterproof exterior of throat with minimum thickness of 3/32 inch elastic bituminous plastic cement coating.

C. Cable Supports: Install racks, support arms and insulators of size and number to provide one insulator (or equivalent space on nonmetallic support arms) on each cable support assembly for each conduit entering the manhole:

MEASUREMENT & PAYMENT For furnishing and installation of this item "MANHOLE" with all accessories described in the specifications, the contractor shall furnish unit bid price.

The bid price shall be a unit price for each manhole installed with cover and frame grounding, cable supports, etc. and shall include the cost of all labor, materials and equipment necessary to complete the work in accordance with the specifications, and to the satisfaction of the Engineer and Utility.

The payment shall be made for actual number of manholes installed.

The price shall not include the cost of excavating. This cost shall be paid under separate item "Unclassified Excavation".

Payment will be made under:

Item No.	Item	Pay Unit
PK-ESCR 679	Electrical Manhole	EA

END OF SECTION

SECTION PK-ESCR 685 – 500 KCMIL COPPER, 600V WIRE

GENERAL: Under this item the contractor shall furnish and install new wire and cable as specified on drawings.

The work shall include but not limited to furnishing and installation of cable in conduit and boxes including cleaning of the conduits, splices, terminations and final connection on line and load sides of Electrical existing installations and newly supplied under this contract and supplied by others.

All work shall be done in compliance with National Electrical Code and NYC Electric Code.

1] All wiring shall be in conduit as shown on drawing and protected from mechanical injury by metal coverings. All electrical parts shall be approved by the National Board of Fire Underwriters and the Bureau of Electrical Control and shall comply with the National Electric Code. The cable shall be U.L. Listed for exterior application Type USE-2 with EPR insulation.

2] Wire & cable up to 600v shall be copper and have current carrying capacity not less than indicated and shall conform to the standards of the Underwriter's Laboratories, Inc. Conductor sizes shall be as indicated on the drawings. 75C insulation shall be used for all size of wire, unless otherwise noted on plans and in accordance with the requirements of N.Y.C. Dept. of Buildings, Bureau of Electrical Control.

3] Factory color coding for cable shall be as follows: 120/208 volts black, red, blue, and white; white conductors shall serve as neutral conductors.

4] Unless otherwise particularly approved, no wires shall be pulled in until the conduit system is completed. No grease or oil shall be used to facilitate the pulling of the wires; only approved pulling compound shall be used. All wire shall be continuous between pull boxes & lamp posts.

5] Joints that become necessary in circuit work at the outlets shall be made with approved pressure connectors. All joints shall be covered with an insulation equal to that on the conductors. Approved pressure connectors, Ideal Wingnuts, Scotch-lock, Buchanan, Thomas and Betts or as accepted, shall be used in lieu of solder and tape. The cost of splices shall be a part of this item.

6] All existing conduits are to be cleaned prior to cable installation.

7] New conduit to be used for installation of cable shall be properly cleared from one end to the other with mandrel approximately 85% diameter of the conduit size.

SPLICING:

1] Splices in the run are not permitted.

2] Splicing shall conform to the National Electrical Code in accordance with the requirements of the Department of Buildings, Bureau of Electrical Control, "Specification for Single Conductor Wire and Cable".

3] Maintain splices and joints in accessible enclosures, where easy inspection is available.

4] Join, tap and terminate stranded 120/208 volt conductors #6 AWG and larger by means of long barrel copper butt splice crimp sleeves with oil stops, approved taps and two hole compression lugs. Exclude connectors and lugs of the types which apply set screws directly to conductors. Apply pressure indent type connectors, taps and lugs utilizing tools

manufactured specifically for the purpose and having features preventing their release until the final pressure has been exerted on the lug or connector. Heat shrink sleeve over entire splice. 3M or equal scotch coat over entire shrink sleeve. Wrap one half lapped layer of electrical tape over entire splice. Burndy, T & B, MAC products or approved equal.

Except where wire nuts are used, build up insulation over conductor joints to a value, equal both in thickness and dielectric strength, to that of the factory applied conductor insulation. Insulation of conductor taps and joints shall be by means of half-lapped layers of rubber tape, with an outer layer of friction tape, by means of half-lapped layers of approved plastic electric insulating tape, or (in the case of bolted type connector joints) by means of split insulating casings molded specifically to insulate the particular connector & conductor, and fastened with stainless steel or non-metallic snaps or clips.

PROTECTION: The Contractor shall protect and be responsible for the Contractor's materials, tools, work and equipment until completion thereof and until the acceptance of same by the Engineer.

CABLE SAMPLES:

1] The Engineer shall take samples of each size of cable not less than ten feet in length for tests. These samples will be taken by the Engineer in the field and the Engineer may select same from any reel at random.

2] The Engineer may order any reel delivered to a City approved laboratory for test. Transportation of such reel to and from the laboratory and all costs of testing shall be at the expense of the Contractor.

CABLE TAGS: Furnish and install approved tags with the wire identification permanently marked thereon so that all wires may be traced from box to box, where splices occur, install a tag on the wire on all sides of every splice. Tag shall equal to Panduit PLM marker ties.

TESTING AFTER INSTALLATION: The cable shall be tested after installation but before final connections for the continuity and insulating. The insulation resistance must comply with the NETA recommended testing requirements.

MEASUREMENT & PAYMENT: The quantity of wires to be paid for under each of the items shall be the number of linear feet of wire installed in accordance with the plans, specifications and directions of the Engineer.

The price bid shall be a unit price per linear foot, including splices, furnished and installed and shall include the cost of all labor, materials, equipment and incidental expenses necessary to complete the work, including testing, all in accordance with the plans and specifications to the satisfaction of the Engineer.

Payment will be made under:

Item No.	Item	Pay Unit
PK-ESCR 685	500 KCMIL Copper, 600V Wire	LF

END OF SECTION

SECTION PK-ESCR 691 – BRICK MASONRY/PRECAST CONCRETE FOR DRAINAGE STRUCTURE

PK-ESCR 691.1. **WORK:** Under this item, the Contractor shall build or provide **BRICK MASONRY/PRECAST CONCRETE FOR DRAINAGE STRUCTURE** in accordance with the plans, specifications, and directions of the Engineer.

PK-ESCR 691.2. **MATERIALS:**

Brick: Brick Masonry drainage structures shall not be permitted for this contract. All structures shall be precast concrete. Brick shall be only utilized for manhole cover and catch basin grate adjustments, as directed by the Engineer.

Mortar: The mortar shall be composed of one (1) part of Portland cement and a maximum of two (2) parts fine aggregate, with not more than five percent (5%) of the cement content of hydrated lime putty.

Precast Concrete: All new park drainage and sanitary structures shall be precast concrete. The Contractor and the Contractor's precaster shall be responsible for the structural design, to meet H-20 loading, of any new structures to meet the rim and invert elevations indicated on the details located in Appendix A of the contract drawings. Payment shall be made on a cubic yard basis of precast concrete at the same price bid for brick masonry. No additional payment shall be made for structural design of precast structures.

Ladder Rungs for Precast Concrete Drainage Structures: Ladder rungs for precast drainage structures shall be constructed of copolymer polypropylene plastic, as manufactured by M.A. Industries Peachtree City, GA, or approved equal. The cost for these ladder rungs shall be included in the cubic yard unit cast for precast structure.

PK-ESCR 691.3 **INSTALLATION**:

Laying Bricks: Bricks shall be satisfactorily wet when being laid, and each brick shall be laid in cement mortar so as to form full bed, end and side joints at one operation. The joints shall not be wider than three eighth inch (3/8"), except when the bricks are laid radially, in which case the narrowest part of the joint shall not exceed one quarter inch (1/4"). The bricks shall be laid in a professional manner true to line and wherever practicable, the joint shall be carefully struck and pointed on the inside. Brick work shall be laid with a satisfactory bond and as it progresses, shall be racked back in course, unless otherwise permitted.

Cold Weather: In freezing weather, bricks shall be heated sufficiently to remove all ice and frost. No brickwork shall be laid or relaid when the temperature is below 25° Fahrenheit..

PK-ESCR 691.4. **PROTECTION:** All fresh brickwork shall be carefully protected from freezing and from drying effects of the sun and wind and, if required, shall be sprinkled with water at such intervals and for such time as may be directed. Brickwork shall be protected from injuries of all sorts, and all portions which may become damaged or may be found defective shall be repaired, or if directed, to be removed and rebuilt to the satisfaction of the Engineer.

PK-ESCR 691.5. **LIABILITY:** When using precast concrete drainage structures, the Contractor accepts full and complete responsibility for the location of knock-out holes that allow for the entrance of drainage pipes. All pipe invert dimensions shall be verified in the field by the contractor prior to ordering precast drainage structures. No additional compensation shall be paid by the city of any discrepancies that may occur.

PK-ESCR 691.6. **SUBMITTALS:** All submittals shall be in accordance with the requirements of the S-Pages.

Shop Drawings showing all invert elevations must be submitted for approval, prior to use of the precast drainage structures.

PK-ESCR 691.7. **MEASUREMENT AND PAYMENT:** The quantity of **BRICK MASONRY/PRECAST CONCRETE FOR DRAINAGE STRUCTURE** to be paid for under this item shall be the number of **CUBIC YARDS** furnished and laid complete in the work, in accordance with the plans, specifications, and directions of the Engineer.

The price bid shall be a unit price per **CUBIC YARD** of Brick Masonry/Precast concrete furnished and incorporated in the work complete, and shall include the cost of furnishing all labor, material, equipment, including ladder rungs as necessary, and incidental expenses necessary to complete the work in accordance with the plans and specifications, to the satisfaction of the Engineer.

No deductions will be made for spaces occupied by pipes entering drainage structure.

Any frames, covers, etc. if necessary shall be paid for separately under their respective contract item.

Excavation shall be paid for separately under its own contract item.

Payment will be made under:

Item No.	Item	Pay Unit
PK-ESCR 691	BRICK MASONRY/PRECAST CONCRETE FOR DRAINAGE STRUCTURE	C.Y.

END OF SECTION

SECTION PK-ESCR 717 – SHREDDED BARK MULCH

WORK: Under this Item, the Contractor shall furnish and place SHREDDED BARK MULCH in accordance with the plans, specifications, and directions of the Engineer.

MATERIAL: Shredded Bark Mulch shall be a natural forest product composed of shredded bark or wood not exceeding three inches (3") in length and one inch (1") in width. Mulch shall be derived from tree material, not from wood waste or by-products like sawdust, shredded palettes, or other debris. Mulch shall be natural in color and not dyed. It shall be of a uniform grade with no additives or any other treatment. Mulch with leaves, twigs, and/or debris shall not be acceptable. The pH factor should range from 5.8 to 6.2.

Commercial Fertilizer Low Phosphorus (Slow Release): shall have the following composition by weight: Nitrogen (N) shall be min. 7% - max. 10%, of which min. of 50% is slow-release; available Phosphorus (P) shall be min. 1% - max. 2%; and soluble Potash (K) shall be min. 4% - max. 12%.

Fertilizer shall be a pesticide free (no weed-and-feed) product such as "Healthy Turf (8-1-9)" as manufactured by Plant Health Care, Inc, Pittsburgh, PA; or Safer Ringer Lawn Restore (10-2-6) as manufactured by Woodstream Corp., Lifitz, PA; or Nutrients Plus (7-2-12) as manufactured by Nutrients Plus, Virginia Beach VA, or approved equal.

All Commercial Fertilizer Low Phosphorous (Slow Release) shall be delivered in standard size bags of the manufacturer, showing weight, analysis, and name of manufacturer. It shall be stored as directed by the Engineer in such a manner that its effectiveness will not be impaired.

METHOD: Upon completion of planting and prior to application of shredded bark, Commercial Fertilizer Low Phosphorous (Slow Release) shall be incorporated into soil to a depth of three inches (3") at the rate of twenty pounds per thousand square feet. ((20 lbs./1,000 s.f.)

Shredded bark mulch shall be applied to the surface of the beds and tree pit areas, as shown on the plans or Standard Details and as directed by the Engineer. Mulch shall be applied to a uniform depth of three to four inches (3"-4") over the tree pit and shrub bed areas and two to three inches (2"-3") over groundcover beds, and shall be so distributed as to create a smooth level cover over the exposed soil. Plants shall not be covered.

MEASUREMENT AND PAYMENT: The quantity of **SHREDDED BARK MULCH** to be paid for under this item shall be the number of **SQUARE YARDS** of mulch measured in final position, furnished and installed in accordance with the plans, specifications, and directions of the Engineer.

The price bid shall be a unit price per **SQUARE YARD** and shall include the cost of all labor, materials, and equipment necessary or required to complete the work including furnishing and applying Commercial Fertilizer Low Phosphorous (Slow Release), mulch, and watering, all in accordance with the plans and specifications, to the satisfaction of the Engineer.

Landscape Fabric shall be paid for separately under its own item.

Payment will be made under:

Item No.	Item	Pay Unit
PK-ESCR 717	SHREDDED BARK MULCH	S.Y.

END OF SECTION

SECTION PK-ESCR 741 – PLANT STREET TREE

WORK: Under this Item, the Contractor shall perform all work necessary to **PLANT STREET TREE, 2 1/2-3" CALIPER**, in accordance with the plans, specifications, and directions of the Engineer. This Item is not intended for use with the Structural Soil Item; the Tree Item shall be used for planting in the Structural Soil.

Work shall include removal of existing dead trees and stumps in the designated planting pit up to 6" cal., excavation, furnishing, mixing, and incorporating topsoil, manure, mycorrhizal inoculant, and fertilizer tablets in the backfill of all tree pits, furnishing, planting, maintaining, and replacing new trees of the type and size designated on the lists, furnishing and installing tree stakes, and all incidental work shall be completed under this Item.

The Contractor shall be liable for any damage to property caused by planting operations and related work, and all areas and construction disturbed shall be restored to their original conditions, to the satisfaction of the Engineer.

ASIAN LONGHORNED BEETLE QUARANTINE ZONE REGULATIONS: Due to current Federal, State and NYC DPR policy, the following host species may not be planted in the quarantine zone. Host species are as follows: Acer-Maple, Aesculus-Horsechestnut/Buckeye, Salix-Willow, Betula-Birch, Populus-Poplar, Ulmus-Elm, Albiza-Mimosa/Silk Tree, CeltisHackberry, Fraxinus-Ash, Platanus-London Planetree,Sycamore, Sorbus-Mountain Ash.

In addition, Nurseries located within the quarantine zone shall comply with State and Federal Law and all Contractors and/or Subcontractors shall be Certified by the New York State Department of Agriculture and Markets to perform work within the Quarantine Zone (see Submittals section below).

TREE:

Names: Plant names, size, and grading standards shall conform to those prepared by the American Association of Nurserymen Horticultural Standards, 1995 Edition, unless otherwise specified. No substitution shall be permitted except by written permission of the Engineer.

Quality: All trees shall be typical of their species or variety. They shall have normal well developed branches and vigorous fibrous root systems. They shall be sound, healthy, vigorous trees, free from defects, disfiguring knots, sunscald injuries, abrasions of the bark, plant diseases, insect eggs, borers, and all forms of infestation. All trees shall be tagged by the Engineer, who shall reject all trees not meeting the above specifications, and trees having damaged or missing leaders, multiple leaders, Y-crotches, or indications of topping or heading back. All trees shall be nursery grown and shall have been growing under the same climatic conditions as the location of this project for at least two (2) years prior to date of contract. Trees held in storage will be rejected if they show signs of growth during storage.

Dimensions: Each tree shall be dimensioned as it stands in its natural position. Stock furnished shall be a fair average of the minimum and maximum sizes specified

PREPARATION OF TREES: All precautions customary in good trade practice shall be taken in preparing trees for moving, and workmanship that fails to meet the highest standards will be rejected. All trees shall be dug immediately before moving, unless otherwise specified. All trees shall be dug to retain as many fibrous roots as possible. Balled and burlapped trees shall have a solid ball of earth of the minimum specified size, securely held in place by burlap and stout rope

or twine. Oversize or exceptionally heavy trees are acceptable if the size of the ball or spread of roots is proportionally increased, to the satisfaction of the Engineer. Loose, broken, or manufactured balls will be rejected.

BACKFILL: Material shall consist of natural loam topsoil with the addition of humus only, and no other soil type, such as a sand or clay soil type, shall be accepted. Topsoil must be free from subsoil, obtained from an area which has never been stripped. It shall be removed to a depth of one (1) foot, or less if subsoil is encountered. Topsoil shall be of uniform quality, free from hard clods, stiff clay, hardpan, sods, partially disintegrated stone, lime, cement, ashes, slag, concrete, tar residues, tarred paper, boards, chips, sticks or any other undesirable material. If a truck load of topsoil is considered by the Engineer to contain too much undesirable material to be corrected on the site, the entire truck load shall be rejected. No topsoil shall be delivered in a frozen or muddy condition.

Topsoil shall comply with the following requirements:

CHEMICAL AND PHYSICAL COMPOSITION: Natural loam with the addition of humus shall comply with the following requirements:

a. Organic Matter--must be between nine (9) and twelve (12) percent by weight, as determined by the Dry Combustion Method for Total Carbon and Organic Carbon (using a multiplying factor of 2) as described in Methods of Soil Analysis, #9, Part 2, 2nd ed. published by the American Society of Agronomy. The organic content shall not exceed fourteen percent (14%).

b. pH range--shall be 6.0 to 7.0 inclusive.

c. Sieve Analysis -- By Wash Test, ASTM Designation C-117. Passing 2" sieve 100% Passing 1" sieve 95% to 100% Passing #4 sieve 90% to 100% Passing #100 sieve 30% to 60%

d. Clay--the test method to measure the clay content of the soil shall be ASTM D 422. The Engineer reserves the right to reject topsoil in which more than 60% of the material passing the No. 100 U.S.S. Mesh sieve consists of clay as determined by the Buoyoucous Hydrometer or by the decantation method. All percentages are to be based on dry weight of sample.

When the topsoil otherwise complies with the requirements of the specification but shows a deficiency of not more than one (1) percent in organic matter, it may be incorporated when and as permitted by the Engineer.

Electrical Conductivity shall be less than 1500 mhos/cm. A higher level would indicate excessive salt content. The testing method must be the saturated paste method.

The Contractor shall at the direction and discretion of the Engineer furnish a certified report of an approved analytical chemist showing the analysis of representative samples of the topsoil which he proposes to use. All samples are to be taken by and delivered to the laboratory by the Engineer; the price bid shall include inspection and laboratory charges. No topsoil shall be delivered until the approval of samples by the Engineer, but such approval shall not constitute acceptance. The Engineer reserves the right to reject on or after delivery any materials which do not, in the Engineer's opinion, meet these specifications and resample. Sampling procedure shall be explained in detail at the preconstruction meeting. If the Engineer directs, topsoil which varies only slightly from the specifications may be made acceptable by such corrections as the Engineer deems necessary.

Mycorrhizal Fungi Inoculant: Shall be applied by means of a three ounce (3 oz.) premeasured dry formulation packet, such as Mycor Tree Saver Transplant®, as manufactured by Plant Health Care, Inc., Pittsburgh, PA, or approved equal. Packets shall contain, as a minimum: one thousand (1000) live spores of Vesicular-Arbuscular fungi, including: Entrephosphora columbiana, Glomus clarum, Glomus etunicatum, and Glomus sp.; seventeen million five hundred thousand (17,500,000) live spores of Ectomycorrhizal fungi, including: Pisolithus tinctorius; biostimulants including Yucca schidigera extract; soluble sea kelp extract derived from Ascophylum nodosum; humic acids; and acrylamide copolymer gel as a water absorbent medium. Three (3) three ounce (3 oz.) packets shall be added to the top six to eight inches (6-8") of backfill soil added to each pit and thoroughly mixed to distribute the inoculant.

Water Retention Additive: Water Retention Additives shall be a granular polyacrylamide polymer of a potassium base and not a sodium base that slowly releases moisture into the root zone such as Terra Sorb, as manufactured by Plant Health Care, Inc., Pittsburgh, Pa., or approved equal. It shall be applied at the time of planting during a dry planting as defined by Parks and Recreation. Each tree shall receive three (3) ounces or amount specified by product instructions. Half should be added at a depth of 8-10 inches and the other half just below the finished surface.

Delivery: Trees shall be packed, transported, and handled with utmost care to ensure adequate protection against injury. When transported in closed vehicles, plants shall receive adequate ventilation to prevent sweating. When transported in open vehicles, plants shall be protected by tarpaulins or other suitable cover material. Balled and burlapped trees shall be set on the ground and balls covered with soil. Until planted, all materials shall be properly maintained and kept adequately moist, to the satisfaction of the Engineer.

Inspection: Inspection may be made before digging, if the Engineer directs, but no trees shall be planted by the Contractor until inspected by the Engineer at the site of the work. All rejected trees shall be immediately removed from the site and replaced with acceptable material at no additional cost.

PLANT LIST: See contract drawings for plant list.

Abbreviations:

Dia. - Indicates the CALIPER of the trunk of the tree.

B & B - Indicates tree to be balled and burlapped.

SITE SPECIFICATIONS:

Time of Planting: Unless otherwise directed by the Engineer, deciduous trees shall be planted from March 1st to May 1st, and from October 15th to December 15th.

Location: Site characteristics, such as overhead power lines, existing vegetation, and infrastructure items, such as curbs and sidewalks, shall be considered. Trees that grow taller than thirty feet (30') should not be planted directly under power lines. When the design allows, the tree leader shall be offset from power lines.

Excavation of Tree Pits: Sizes of tree pits shall be as shown on the Planting Plan. When subsurface obstructions are encountered during excavation, the Contractor shall restore the disturbed area to its original condition. Each tree shall be planted in an individual pit as specified. Pits shall be dug three (3) times the size of the root ball in Caliper and only deep enough so that the root ball sits on undisturbed subgrade, except in situations where curbs and/or adjacent pavements prevent achievement of planting pit dimensions. Sizes of restricted planting pits (i.e.

street trees) shall be at the maximum width allowed, and the same depth as the root ball being planted. Any changes in the planting pit sizes shall be broad enough to accommodate the roots fully extended and only deep enough so that the uppermost roots will be just below the original grade. No tree pits shall be dug until the proposed locations have been staked on site by the Contractor and approved by the Engineer. No tree pits shall be backfilled until approved by the Engineer. All tree pits shall have vertical sides, unless otherwise directed. Excavated material shall be removed from the site unless the Engineer determines the material is suitable for backfilling. Any amendment will be as directed and determined by the Engineer.

Extreme care shall be taken not to excavate to a depth greater than required. The subgrade below the root ball shall be tamped slightly to prevent settlement. Where, in the opinion of the Engineer, the subgrade material is unsuitable, the size of the tree pits shall be dug one-half (1/2) wider than normally required. The bottom and sides of the pit shall be backfilled with existing topsoil thoroughly worked into place.

PLANTING: No planting shall be done, except in the presence of the Engineer. All material shall be inspected by the Engineer as it is being removed from the truck, prior to placing in an approved storage area or the designated planting site. All rejected material shall be removed from the site and replaced with acceptable material at no cost to the City.

Place balled and burlapped material in the prepared planting pit by lifting, and carry it by the rootball. Set the tree straight and in the center of the pit, with the most desirable side facing the predominant view. All trees shall set, after settlement, at the same level at which they have grown in the nursery, with the root flare exposed. Care shall be exercised in setting the trees plumb. All ropes, stones, etc. shall be removed from the pit before backfilling. The backfilling mixture shall be loose and friable, and not frozen or solid.

Cut and remove rope or wire from the top fifty percent (50%) of the rootball and cut and remove the burlap to the edge of the ball. Remove as much woven product and twine as possible. All plastic or synthetic fabric must be removed from the ball at the time of planting. Any wire basket enclosed root ball will need to have at least 2/3 of the wire basket cut away from the sides and top of the ball, and removed from the site. Remaining lateral wires must be cut to prevent future root interference. Wire must not be galvanized or aluminum wire.

Trees shall be handled so that the ball will not be loosened. After the soil has been thoroughly firmed under and around the ball, the burlap shall be cut away from the upper half of the ball, and the remaining burlap adjusted to prevent the formation of air pockets. Where directed by the Engineer, the burlap shall be entirely removed. Soil shall be firmed at six (6") to eight (8") inch intervals and thoroughly settled with water.

All ropes, stones, etc. shall be removed from the pit before backfilling. Soil for backfilling shall be loose, friable, and not frozen. Trees shall be handled so that the ball will not be loosened.

FINISHING SURFACE AFTER BACKFILLING: The Contractor shall cultivate and rake over finished planting areas and shall leave them in an orderly condition. On level ground or slight slopes a shallow basin a little larger than the CALIPER of the tree pit shall be left around each tree, as shown on the details, or as directed by the Engineer. After the shallow basins have been prepared, they shall be mulched three to four inches (3” – 4”) deep. Mulch shall consist of shredded wood or bark not exceeding three inches (3”) in length and one inch (1”) in width. Mulch with leaves, twigs, and/or debris shall not be acceptable. Mulch for tree pits shall be included in the bid price.

STAKING: All staking shall be done immediately after planting and all stakes and wire shall be maintained. Plants shall stand plumb after staking. Stakes shall be of white cedar with bark attached. They may have a maximum allowable deflection of ten percent (10%). Stakes of the dimensions shown on the plans and details shall be placed outside the root ball and shall be driven to the depths indicated on the plans and details.

Stakes shall be fastened to the tree with double No. 12 gauge annealed galvanized steel wire run through a suitable length (at least twelve (12”) inches) of new reinforced one-half inch (1/2") rubber hose or with a suitable length of ¾” wide, flat, woven polypropylene material as manufactured by DeepRoot, San Francisco, CA or approved equal, that is knotted and nailed to the stakes with 1” galvanized roofing nails as directed by the Engineer. Stakes shall be set parallel to the curbs, unless otherwise directed by the Engineer. The length of doubled wire between the tree and stakes shall be hand twisted several times prior to fastening to the stakes. The wires shall be tied off firmly at the stake, not crank twisted at the center. Trees shall stand plumb after staking. Stakes, wires and hoses shall be removed at the end of the one year guarantee period, unless directed otherwise by the Engineer. At the time the stakes are removed any holes left by the stake shall be filled with topsoil item 4.15.

PRUNING: Broken or badly bruised branches shall be removed with a clean cut. Do not cut leaders or use wound paint or dressing to treat cut areas. Crossed branches shall be pruned with a sharp tool in such a manner as to preserve and encourage the plants natural growth form. Crowns of young trees shall not be cut back to compensate for root loss.

MAINTENANCE: At the time of planting, the soil around each tree shall be thoroughly saturated with at least twenty (20) gallons of water.

Water for the irrigation of the planted trees in this contract may be supplied by the Department of Environmental Protection free of charge, until Substantial Completion. In any event, the Contractor shall furnish and apply water, in accordance with the provisions of this contract.

Where water is supplied from City hydrants, the Contractor shall obtain a hydrant permit from the Department of Environmental Protection.

The Contractor shall maintain all planted trees within the limits of this contract, in accordance with the plans, specifications, and directions of the Engineer, until the acceptance and completion of each site of this contract.

Maintenance shall include weeding, cultivating, edging, control of insects, fungus, and other diseases by means of spraying with an approved insecticide or fungicide, pruning, adjustment and repair of stakes, anchors and wires, repair of minor washouts and gullies up to twelve inches (12") in depth, and other horticultural operations necessary for the proper growth of all trees, and for keeping the entire area within the contract limits neat in appearance until the Substantial Completion.

All planting areas shall be cultivated and weeded with hoes or other approved tools within the period from May 1st to October 1st, and such cultivating and weeding shall be repeated at least once a week. Under no conditions shall weeds be allowed to attain more than six inches (6") of growth. The cost of maintenance shall be included in the bid price.

REPLACEMENT: The Contractor shall replace, in accordance with the contract plans and specifications, any Tree that is dead or, in the opinion of the Engineer, in an unhealthy or unsightly condition, and/or have lost their natural shape due to dead branches, excessive pruning, inadequate or improper maintenance, or other causes, including vandalism, prior to final

acceptance. Replacement plants must be installed in the next planting season. The cost of replacements(s) shall be included in the unit price bid for the various furnished items of the contract. Where vandalism or related causes are agreed by the Engineer as the cause for tree replacement, the Contractor shall be responsible for *one* replacement during the one-year guarantee period after Substantial Completion.

Where dead tree has been identified, whether due to natural causes or vandalism, the Contractor shall remove the dead material, including stakes, and wire (if applicable) **within three (3) weeks of notification.**

Where dead tree has been identified, whether due to natural causes or vandalism, the Contractor shall remove the dead Tree, including stakes, burlap, and wire. Earth will be leveled and new topsoil and seed, or appropriate paving material, added at the direction of the Engineer to eliminate any hazardous conditions.

The Contractor shall maintain Replaced Tree to the standards outlined in the “Maintenance” section above.

SUBMITTALS: All submittals shall be as per the S-Pages. The contractor shall submit the following for review and approval prior to performing work:

State Certification (in quarantine zone only): The contractor must submit a copy of a valid Compliance Agreement issued by the State of New York Department of Agriculture and Markets, Division of Plant Industry.

MEASUREMENT AND PAYMENT: The quantity of **TREES, 2-1/2" - 3" CALIPER.** to be paid for under this Item shall be the number of trees of each size and species, supplied, planted, and maintained, in accordance with details and specifications, to the satisfaction of the Engineer

The price bid shall be a unit price for **EACH** tree of each size and species planted, and shall include the cost of excavating plant pits, furnishing and incorporating topsoil and manure in backfill of all tree pits, removal of dead stumps and trees up to six inches (6") Caliper in designated pits, furnishing, planting, pruning, staking, watering, maintaining, and replacing all trees, and all other work incidental thereto, including mycorrhizal fungi inoculant, and water retention additives, in accordance with the sketches, specifications, and to the satisfaction of the Engineer.

The price of water, regardless of source, is deemed included in the unit price bid. No extra payment will be made for water obtained from the Contractor's own source.

Payment will be made under:

Item No.	Item	Pay Unit
PK-ESCR 741	PLANT STREET TREE	EA

END OF SECTION

SECTION PK-ESCR 749 – FOUNDATION MATERIAL FOR ASPHALT (TRUCK MEASURE)

WORK: Under this item, the Contractor shall furnish and place **FOUNDATION MATERIAL FOR ASPHALT (TRUCK MEASURE)** in accordance with the plans, specifications, and directions of the Engineer.

INTENT: The intent of this item is to provide sound foundation/base material for installation of asphalt pavement on poor subgrade or for certain sports pavement including, the asphalt path in Corlears Hook. See Standard Detail, Pavement Details No. 1 for all applications.

MATERIALS: Unless otherwise herein specified, all materials and methods of construction shall comply with the requirements of the NYCDOT Standard Highway Specifications.

Material for foundation shall consist of coarse aggregate per ASTM C33, free from organic or other deleterious material. Coarse aggregate shall be graded within the following limits:

Passing Sieve (Dry Analysis)	Percent by Weight
2"	100
1/4"	30-65
No. 40	5-40
No. 200	0-10

The Magnesium Sulfate Soundness loss after four (4) cycles shall be twenty percent (20%) or less per ASTM C88.

Coarse aggregate shall be Broken Stone or Gravel of approved quality conforming to the requirements of the NYCDOT Standard Highway Specifications". **No recycled material shall be permitted**.

LABORATORY TESTING: The Contractor shall at the direction and discretion of the Engineer, or when quantities exceed thirty (30) cubic yards, furnish a certified report by an approved Materials Testing Laboratory showing the materials composition, sieve analysis, plasticity index, and soundness of the representative samples of material they proposes to use.

The Engineer will deliver the samples to an independent testing laboratory and the Contractor shall bear the responsibility for all costs associated with laboratory testing. The Engineer reserves the right to reject on or after delivery any material, which does not, in their opinion, meet these specifications.

INSTALLATION:

PREPARATION OF FINE GRADES FOR NEW CONSTRUCTION: Before any aggregate is placed upon fine grade, the fine grade shall be prepared to line and grade and compacted where practical with an approved self propelled roller weighing not less than ten (10) tons. All hollows and depressions developed under rolling shall be filled with acceptable material and shall again be rolled. This process of shaping, filling, and rolling shall be repeated until no depressions develop.

The Contractor shall remove from the subgrade all debris, foreign material, and all other undesirable material designated by the Engineer. The fine grade shall not be muddy or otherwise unsatisfactory when the pavement is placed upon it. If the fine grade becomes rutted or displaced, due to any cause whatsoever, the Contractor shall regrade same without additional payment.

SPREADING: Foundation material shall be evenly spread on prepared sub-grade in the position and to the depths shown on the plans or as directed by the Engineer. Foundation material shall be laid in four inch (4") layers (maximum) and rolled while wet with a seven (7) to twelve (12) ton tandem roller (or other approved method satisfactory to the Engineer) to the thickness shown on the plans or as directed by the Engineer.

SUBMITTALS: All submittals shall be submitted prior to installation and in accordance with the requirements of the S-Pages.

A three (3) pound bag of stone aggregate shall be submitted for approval with a sieve analysis and the name of the supplier.

MEASUREMENT AND PAYMENT: The quantity of **FOUNDATION MATERIAL FOR ASPHALT (TRUCK MEASURE)** to be paid for under this item shall be the number of **CUBIC YARDS** of material installed, measured in trucks used for delivery, at the site of the work, in accordance with the plans, specifications, and directions of the Engineer.

The price bid shall be a unit price per **CUBIC YARD** of Foundation Material for Asphalt furnished and placed and shall include the cost of all labor, materials, equipment, and incidental expenses necessary to complete the work, including laboratory testing (if necessary) and preparation of fine grades, all in accordance with the plans and specifications, to the satisfaction of the Engineer.

Payment will be made under:

Item No.	Item	Pay Unit
PK-ESCR 749	FOUNDATION MATERIAL FOR ASPHALT (TRUCK MEASURE)	C.Y.

END OF SECTION

SECTION PK-ESCR 764 – TREE AND PLANTING PROTECTION

PK-ESCR 764.1. INTENT

This section describes the work of providing a Tree and Planting Protection around existing trees and planting beds during construction.

PK-ESCR764.2. DESCRIPTION

The work shall consist of the fabrication, furnishing, installation, erection, maintenance, and subsequent removal and disposal of Tree and Planting Protection around existing trees which are designated to remain.

PK-ESCR 764.3. MATERIALS

All timber shall be Douglas Fir Grade No. 1. Fasteners, such as nails, shall meet the standard industrial fastener specifications for the intended application, and be galvanized in conformance with ASTM Designation A 123.

Plastic Barricade Construction fencing fabric - Color Orange. Manufactured by Allied Products Group, 751 North Bolingbrook Drive, Bldg.16, Bolingbrook, Illinois 60440, or approved equal. Fabric is 5'-0" wide with nominal mesh openings of 1/4"-2” and shall conform to the following requirements:

1. Tensile strength range of 2000 - 2310 P.S.
2. Impact load of 4 to 4.5 foot pounds.
3. Service temperature range between -40 to +200 degrees F.
4. Elongation at break % to be 500%.
5. Weigh per 100' roll to be 30lbs.

PK-ESCR 764.4. METHODS

The Contractor shall construct and install Tree and Planting Protection as shown on the Drawings. All work shall conform with National Design Specifications for Stress Grade Lumber and its fastenings.

All timber at the site of the work shall be stored in piles on supports at least twelve (12”) inches above the ground surface, and so piled as to prevent warping and to shed water. When required by the Engineer, it shall be protected from the weather by suitable covering. The timber shall be close-stacked. The ground under and in the vicinity of all stacks shall be cleared of weeds and rubbish and shall be drained to prevent accumulation of water.

Workmanship shall be first class and only competent carpenters shall be employed. All timber shall be accurately cut and framed to a close fit in such manner that the joints will have even bearing over the entire contact surfaces. No blocking or shimming will be allowed in joints. Timber shall be cut off with a saw; no axe is to be used. Unless otherwise specified, heads of nails and spikes shall be driven with just sufficient force to set the heads flush with the surface of the wood. Deep hammer marks in wood surfaces shall be considered evidence of poor workmanship and sufficient cause for rejection of the pieces affected.

The timber shall be carefully handled, without sudden dropping, breaking of outer fibers, bruising, or penetrating the surface with tools. The timber may be handled with rope slings.

Protective Tree Barriers shall be maintained for the duration of the contract in a condition safe to the public and satisfactory to the Engineer. Upon completion of construction work around the area, all Protective Tree Barriers shall be disassembled, removed and disposed of away from the site.

PK-ESCR 764.5. MEASUREMENT

The quantity of Temporary Wooden Tree Guards to be measured for payment shall be the number of EACH Temporary Wooden Tree Guard actually constructed according to the Contract Drawings, around tree and planting which is to remain, and subsequently removed at each location as directed by the Engineer.

The quantity of Temporary Wooden Tree Guard for Groves to be measured for payment shall be the linear feet of Temporary Wooden Tree Guard for Groves actually constructed according to the Contract Drawings, around tree and planting which is to remain, and subsequently removed at each location as directed by the Engineer.

PK-ESCR 764.6. PRICES TO COVER

The contract price bid per each type of Temporary Wooden Tree Guard shall cover the cost of furnishing all labor, materials, plant, equipment, insurance, and incidentals required to construct, maintain and subsequent removal of the barrier in the locations as directed by the Engineer, in accordance with the Contract Drawings, the specifications, and the directions of the Engineer.

The contract price bid per linear foot of Temporary Wooden Tree Guard for Groves shall cover the cost of furnishing all labor, materials, plant, equipment, insurance, and incidentals required to construct, maintain and subsequent removal of the barrier in the locations as directed by the Engineer, in accordance with the Contract Drawings, the specifications, and the directions of the Engineer.

Payment will be made under:

Item No.	Item	Pay Unit
PK-ESCR 764 A	TEMPORARY WOODEN TREE GUARD	EA
PK-ESCR 764 B	TEMPORARY WOODEN TREE GUARD FOR GROVES	L.F.

END OF SECTION

SECTION PK-ESCR 943 – PARK SECURITY MEASURES

WORK: Under this item, the Contractor shall furnish, erect, and powder coat **PARK SECURITY MEASURES**, in accordance with the plans, specifications, and directions of the Engineer.

QUALIFICATIONS:

Manufacturer:

- For security gate, a company specializing in the manufacturer of Anti-Ram barriers of the type specified, with a minimum of five (5) years' experience manufacturing operators of this type and design.
- For security bollards, manufacturer to have a minimum of 5 years with documented field experience with similar vehicle barriers.

  If parks security measures are based on engineering instead of testing, a Professional Engineer licensed in New York with a minimum of 5 years of experience in projects of similar scope and complexity is to provide a design based on methodologies and calculations to evaluate the performance of bollards in response to the vehicle impact. Proposed design methodologies shall be submitted to Engineer for approval prior to commencement of work.

Installer: Must have a minimum of three (3) years' experience installing similar equipment or obtain other significant manufacturer endorsement of technical aptitude, if required, during the submittal process.

MATERIALS:

Unless otherwise herein specified, all materials of construction shall meet the requirements of the NYCDOT Standard Highway Specifications.

Concrete: Per NYCDOT Standard Highway Specifications Section 3.05 and shall be 6000 psi.

Reinforcement: Per Section 4.14.

PRODUCTS:

Fixed Bollard Type 1: K8 Rated Fixed Bollard with shallow mounted footing (Truckstopper 7 by Tymetal or approved equal) Address: SafetyFlex Anti Terrorist Barriers and distributed by Tymetal Corp., 678 Wilbur Avenue, Greenwich, NY 12834 – (800) 328 – 4283.

Fixed Bollard Type 2: K4 Rated Fixed Bollard with shallow mounted footing (Truckstopper 6 by Tymetal or approved equal) Address: SafetyFlex Anti Terrorist Barriers and distributed by Tymetal Corp., 678 Wilbur Avenue, Greenwich, NY 12834 – (800) 328 – 4283.

Security Gate: K8 Rated Gate, Terra Ultimate 180 Swing Barrier by Frontier Pitts or approved Equal Address: Crompton House,Crompton Way,Manor Royal Industrial Estate,Crawley,West Sussex RH10 9QZ

Removable Bollard: K8 Rated Bollard with shallow mounted footing (Truckstopper 7 by Tymetal or approved equal) Address: SafetyFlex Anti Terrorist Barriers and distributed by Tymetal Corp., 678 Wilbur Avenue, Greenwich, NY 12834 – (800) 328 – 4283.

Fixed Bollard Type 3: Custom K4 Rated Fix Bollard with custom dimensioned shallow mounted footing and custom bollard extension arm per drawings (Custom Truckstopper 6 by Tymetal or

approved equal) Address: SafetyFlex Anti Terrorist Barriers and distribution by Tymetal Corp., 678 Wilbur Avenue, Greenwich, NY 12834 – (800) 328 – 4283.

PERFORMANCE REQUIREMENTS:

Fixed Bollard Type 1: Impact Condition Designation M40, Penetration Rating P2, with a capability of stopping at 15,000lb vehicle traveling at speeds up to forty (40) mph with a vehicle penetration not to exceed twenty-three feet (23' [7 m]). The fixed bollard system shall be certified by an independent testing laboratory in accordance with ASTM F2656-15 or verified with engineering approved by the Engineer for finite element methods and models by a Professional Engineer licensed in New York State. Crash Test or Engineer shall be based on vehicle impact to a single bollard. If engineered, contractor to provide design methodologies and engineer calculations for review via submittal prior to work.

Fixed Bollard Type: Impact Condition Designation M30, Penetration Rating P1, with a capability of stopping at 15,000lb vehicle traveling at speeds up to thirty (30) mph with a vehicle penetration not to exceed three feet (3' [1 m]). The fixed bollard system shall be certified by an independent testing laboratory in accordance with ASTM F2656-15 or verified with engineering approved by the Engineer for finite element methods and models by a Professional Engineer licensed in New York State. Crash Test or Engineer shall be based on vehicle impact to a single bollard. If engineered, contractor to provide design methodologies and engineer calculations for review via submittal prior to work.

Security Gate: The manually operated vehicle barrier system shall be certified by an interdependent testing laboratory to meet one of the following performance requirements:

1. IWA 14-1:2013: Classification Code 7200(N2A)/80/90:4.7 for a 7,200kg vehicle weight travelling at 80kph (50mph) with a vehicle penetration not to exceed 4.7m (15ft).
2. PAS 68:2010: Classification V/7500(N2)/80/90/5 for a 7,500kg vehicle weight travelling at 80kph (50mph) with a vehicle penetration not to exceed 4.7m (15ft).
3. ASTM F2656-15: Impact Condition Designation M40, Penetration Rating P2, with a capability of stopping a 15,000lb vehicle traveling at speeds up to 40mph with a vehicle penetration not to exceed 7m (23ft).

Removable Bollard: Impact Condition Designation M40, Penetration Rating P2, with a capability of stopping at 15,000lb vehicle traveling at speeds up to forty (40) mph with a vehicle penetration not to exceed twenty-three feet (23' [7 m]). The removable bollard system shall be certified by an independent testing laboratory in accordance with ASTM F2656-15 or verified with engineering approved by the Engineer for finite element methods and models by a Professional Engineer licensed in New York State. Crash Test or Engineer shall be based on vehicle impact to a single bollard. If engineered, contractor to provide design methodologies and engineer calculations for review via submittal prior to work.

Fixed Bollard Type 3: Impact Condition Designation M30, Penetration Rating P1, with a capability of stopping at 15,000lb vehicle traveling at speeds up to thirty (30) mph with a vehicle penetration not to exceed three feet (3' [1 m]). Fixed Bollard Type 3 to have custom footing dimensions per drawings and custom Bollard Extension Arm. The fixed bollard system shall be certified by an independent testing laboratory in accordance with ASTM F2656-15 or verified with engineering approved by the Engineer for finite element methods and models by a Professional Engineer licensed in New York State. Crash Test or engineering shall be based on vehicle impact to a

single bollard. If engineered, contractor to provide design methodologies and engineer calculations for review via submittal prior to work.

LOCKING MECHANISM: For Removable Bollard and Security Gate, the system shall be secured by an anti-tamper locking mechanism encasing the locking pin complying with New York City Fire Code Chapter 5, Section FC 506 for "Keys and Key Access" and provide a minimum of five (5) FDNY standard "1620" compliant keys. Lock must not be case hardened. Provide a minimum of two (2) extra locking pins. Means and methods for bollard lifting mechanism and removal procedures shall be submitted for approval by the Engineer prior to installation.

ERECTION: The posts for bollards and gate shall be set in concrete footings as shown on the plans or as directed by the Engineer. The sleeves for removable bollards shall be set in concrete footings, as shown on the plans or as directed by the Engineer.

All posts and sleeves shall be set plumb and true to line and grade. Any post and sleeve not set true to line and grade shall be removed and replaced at the Contractor's expense. Bending posts to make them plumb will not be permitted.

FINISH: All bollard security measures items shall be stainless steel with a brushed finish.

All gate security measures items shall be hot-dipped galvanized and powder coated with TGICPolyester. Galvanizing shall provide an acceptable substrate for applied powder coatings. No lacquer, urethane, or other coatings which would prevent proper adhesion of powder coating shall be applied to the steel. The powder coating shall be applied to the galvanized steel pipe in such a manner that the coating will not peel off per manufacturer's directions. Ensure surfaces to be coated are clean, dry, and free of grease, dust, rust, etc. Color shall be SAE International's AMS-STD-595 Paint Code: 17178 'Aluminum / Silver' (NYC DOT Standard 'George Washington Bridge Gray'). The TGIC-Polyester shall be applied without voids, teas, or cuts that reveal the substrate and shall thoroughly adhere to the metal as described in Laboratory Test requirements below.

SUBMITTALS: All submittals shall be submitted and approved prior to manufacturer and in accordance with the requirements of the S-Pages. Submittals to include:

Product Information and Testing Reports: The manufacturer's literature for each product, including testing report with relevant information that clearly indicates testing conditions and how these apply to job conditions, along with all engineering for both standard testing conditions and deviations from standard testing conditions, shall be submitted.

Engineering Calculations: All engineering calculations, standard and deviations, must be submitted to the Engineer for approval.

Shop Drawings: Before the work is started, the Contractor shall submit shop drawings for approval for all security measure items. The Contractor shall submit shop drawings no later than four (4) months prior to the scheduled completion of the project. The Contractor shall submit the following information as required by the Engineer: materials, finishes, supports, hardware, fasteners, fittings, and accessories. Shop drawings to show relations to adjacent work, location of concrete footings, and reinforcement information. All drawings shall show English units. Metric units can be down in addition to English units.

Installation instructions: Submit two copies of manufacturer's installation instructions for this specific project. Submit manufacturer's completed warranty registration form to Engineer.

Project List: Submit list of product installations comparable to the subject job as reference. Include date of product installation, installer, and owner's name and location of the project.

Design Mix report: The Contractor shall submit a concrete design mix report per the requirements

of the Section 4.06. Concrete in Structures.

Sample: A color sample. A finish sample.

Laboratory Test: TGIC-Polyester Powder Coat. A the direction of the Engineer, a sample of TBID-Polyester powder coated security gate shall be tested for bonding of the powder coating to the metal. Test shall be the Cross Hatch test per ASTM D3359, Method B or ASTM D4551 with no failure in the coating. Failure to satisfactorily pass this test will be a basis for rejection.

WARRANTY: Provide a warranty against all defects in materials or workmanship for five (5) years after the date of installation. Defective materials shall be replaced at manufacturer's discretion with new or reconditioned materials furnished by the manufacturer, at no cost to the City.

MEASUREMENT AND PAYMENT: The quantity of **FIXED BOLLARD TYPE 1, FIXED BOLLARD TYPE 2, SECURITY GATE, REMOVABLE BOLLARD** and **FIXED BOLLARD TYPE 3** to be paid for under these items shall be the number furnished and installed in accordance with the plans, specifications, and directions of the Engineer.

The price bid shall be separate unit price for **EACH** Fixed Bollard Type 1, furnished and erected, and shall include the cost for all labor, material, equipment, and incidental expenses necessary to complete the work, including excavation, concrete for structure and footing, steel reinforcement, and powder coating, where required, all in accordance with the plans and specifications, to the satisfaction of the Engineer.

The price bid shall be separate unit price for **EACH** Fixed Bollard Type 2, furnished and erected, and shall include the cost for all labor, material, equipment, and incidental expenses necessary to complete the work, including excavation, concrete for structure and footing, steel reinforcement, and powder coating, where required, all in accordance with the plans and specifications, to the satisfaction of the Engineer.

The price bid shall be separate unit price for **EACH** Security Gate, furnished and erected, and shall include the cost for all labor, material, equipment, and incidental expenses necessary to complete the work, including excavation, concrete for structure and footing, steel reinforcement, and powder coating, where required, all in accordance with the plans and specifications, to the satisfaction of the Engineer.

The price bid shall be separate unit price for **EACH** Removable Bollard, furnished and erected, and shall include the cost for all labor, material, equipment, and incidental expenses necessary to complete the work, including excavation concrete for park structures, powder coating, and padlock, where required, all in accordance with the plans and specifications, to the satisfaction of the Engineer.

Payment will be made under:

Item No.	Item	Pay Unit
PK-ESCR 943 A	FIXED BOLLARD TYPE 1	EA
PK-ESCR 943 B	FIXED BOLLARD TYPE 2	EA
PK-ESCR 943 C	SECURITY GATE	EA
PK-ESCR 943 D	REMOVABLE BOLLARD	EA

END OF SECTION

SECTION PK-ESCR 944 – COMPOST

PK-ESCR 944.1. DESCRIPTION

A. Under this Item, the Contractor shall furnish, spread, and incorporate COMPOST —in existing or new soil, in accordance with the plans and specifications, to the satisfaction of the Engineer.

PK-ESCR 944.2. MATERIALS

A. Compost: A stable, humus-like material produced from the aerobic decomposition of organic residues which shall have been composted for a minimum of one year (12 months). The use of biosolids as feedstock for compost production is prohibited. Compost shall be a dark brown to black color and be capable of supporting plant growth with appropriate management applicable, with no visible free water or dust, with no unpleasant odor, and meeting the following criteria as reported by laboratory tests:

Criteria	Test Method	Acceptable Range
Feed stock		Brewer's waste, or leaf mulches are acceptable. Composted municipal waste (chipped, shredded and screened wood, leaves, bark, etc.) alone is not acceptable unless it meets all of the criteria noted
Carbon/Nitrogen Ratio		10:1 - 25:1
Degree of Maturity	Dewer Self Heating or	VI-V
	Solvita Maturity Index or	6-8
	CO^2 Evolution	1.2%C/day
Texture	Dry Sieve and Hydrometer	Screened to 1/2 inch maximum particle size, and not more that 3 percent material finer than 0.002mm as determined by hydrometer test on ashed material.
Foreign Material	Dry Weight	Debris such as metal, glass, plastic, wood (other than residual chips), asphalt or masonry shall not be visible and shall not exceed 1% dry weight.
Organic Matter %	Dry Weight	≥20 percent
pH	1:1 soil-distilled water suspension using a glass electrode pH meter American Society of Agronomy Methods of Soil Analysis, Part 2, 1986.	6.5 to 7.3
Ammonium	Extract	<200 PPM

Salinity	1:5 soil to water ratio extract	2.0 mmhos/cm (dS/m).
Nutrient Content	Extract	Total Nitrogen, Ammonium Nitrogen, Phosphorus, Potassium, Calcium, Magnesium, Sulfur, Calcium, Magnesium, Sodium, Iron, Aluminum, Manganese, Copper, Zinc.
Pathogens/Metals/Vector Attraction	Extract	Meet all Federal and State of New York requirements for applications to soils with human activity.

PK-ESCR 944.2.1. REFERENCES.

A. U.S. Compost Council's Test Methods for the Examination of Composting and Composts.

PK-ESCR 944.2.2. QUALITY ASSURANCE.

A. Compost Testing Laboratory: An independent soil testing laboratory with the experience and capability to conduct the testing indicated and that specializes in types of tests to be performed and capable of making soil recommendations, and issuing reports as specified herein, including the ability to make recommendations about soil blending ratios and methods, amendment recommendations, and issuing reports as specified herein.

   a. Verify Testing Laboratories have the experience and capability to conduct the testing indicated and that specializes in types of tests to be performed and capable of making soil recommendations, and issuing reports as specified herein.

   b. Subject to meeting the requirements, the following are acceptable testing laboratories:

      i. Compost Testing:

         1. Penn State Analytical Services Lab, University Park, PA, (814) 863-0841
         2. Woods End Research Laboratory, Mt. Vernon, ME, (207) 293-2457.
         3. Soil FoodWeb New York, Center Moriches, NY 11716, (631) 750-1553
         4. AgroLab Harrington, DE 19952, (302) 566-6094
         5. A&L Great Lakes Lab, Fort Wayne, IN 46080, (260) 483-4759

PK-ESCR 944.2.3. SUBMITTALS

A. Certified third party test reports for Compost material showing compliance with requirements dated no earlier than 60 days from time of submittal.

B. No Compost shall be delivered until the approval of test repots by the Engineer, but such approval does not constitute acceptance. The Engineer reserves the right to reject, on or after delivery, any material which does not, in their opinion, meet these specifications.

C. Product Data: For each type of product indicated.

   a. Submit most recent printed information from manufacturer.

      i. Compost: identify the material(s) from of which is it composed and identify the location where material was composted.

   b. Data for the compost shall be no older than 30 days from date of the submittal submission.

D. Qualification Data:

   a. Soil material supplier, including:

      i. List of previous projects including project name, a contact name, phone number, and the number of cubic yards per each installation and a brief description of the project.

      ii. Location where the planting soil mixes and component materials will be mixed and stockpiled including available soil mixing and stockpiling area.

   b. Submit qualifications of Soil Testing Laboratory to be utilized for soil testing, including the resume of the staff anticipated to perform the required work of the project.

E. Material Test Reports:

   a. General: Submit written reports of each sample tested. Each report to include the following as a minimum and such other information required specific to material tested:

      i. Date issued.
      ii. Project Title names of Contractor and supplier.
      iii. Testing laboratory name, address and telephone number, and name(s), as applicable, of each field and laboratory inspector.
      iv. Date, place, and time of sampling or test, with record of temperature and weather conditions.
      v. Location of material source.
      vi. Name and protocol of test performed.

   b. Resubmissions of material samples shall be accompanied by a matching material test report.

   c. Missing information, failure to use the specified testing protocol, or failure to supply a material sample as specified with the test report shall be grounds for rejection.

   d. Lab test reports submitted for approval by the Engineer shall be dated no more than thirty (30) days from date of sample collection.

   e. Contractor to bear responsibility for all costs associated with laboratory testing.

   f. Test Reports: The Contractor shall submit test reports with each sample of compost for approval. Resubmissions of test reports shall be accompanied by a matching material sample.

      i. Provide the following Testing for Compost:

         1. Feedstock
         2. Carbon/Nitrogen Ration (C/N)
         3. Degree of Maturity

4. Texture (Particle Size)
5. Organic Content (%)
6. pH
7. Buffer pH
8. Cation Exchange Capacity
9. Soluble Salts
10. Nutrient Content (Total Nitrogen, Ammonium Nitrogen, Phosphorus, Potassium, Calcium, Magnesium, Sulfur, Calcium, Magnesium, Sodium, Iron, Aluminum, Manganese, Copper, Zinc)
11. Moisture Content
12. Pathogens/Metals/Vector Attraction
13. Test Frequency: One for each 100 CY of compost supplied, unless otherwise directed by the Engineer.

PK-ESCR 944.2.4. DELIVERY, STORAGE, AND HANDLING

A. Packaged Materials: Deliver packaged Compost materials in original, unopened containers showing weight, certified analysis, name and address of manufacturer, and compliance with local, state and Federal laws if applicable.

   a. Accompany each packaged delivery of Compost with delivery tickets.

B. Bulk Materials:

   a. Do not dump or store bulk materials near structures, utilities, walkways and pavements, or on existing turf areas or plants.

   b. Provide erosion-control measures to prevent erosion or displacement of bulk materials, discharge of soil-bearing water runoff, and airborne dust reaching adjacent properties, water conveyance systems, or walkways.

   c. Do not move or handle materials when they are wet or frozen.

   d. Accompany each bulk delivery of biochar with delivery tickets.

   e. When compost is stored on the job site, it shall be done as directed by the Engineer.

C. Weather Limitations: Proceed with Compost installation only when existing and forecasted weather conditions permit application to the soil when beneficial and optimum results may be obtained. Apply products during favorable weather conditions according to manufacturer's written instructions.

   a. Do not apply Compost during windy or rainy conditions.

PK-ESCR 944.2.5. COMPOST PRODUCERS

A. Subject to meeting the requirements, compost material is available from the following producers:

   a. Long Island Compost, Islip, NY

   b. “Nature's Choice Compost” by Nature's Choice Corp., Union, NJ,

   c. Agresoil Compost by Agresource, Inc. Amesbury, MA,

   d. Organic Recycling Inc. Orangeburg, NY

   e. Approved Equal.

PK-ESCR 944.3. METHODS

A. After all areas to be seeded, sodded or planted have been fine graded to their compacted depth as per the Drawings, compost shall be spread over the surface of the planting soil a rate of 1 cubic yard of Compost per 1,000 feet of planting soil surface, unless otherwise directed by the Engineer.

B. Thoroughly incorporate the biochar into the top five (5) inches of the planting soil by hand with a rototiller.

PK-ESCR 944.4. MEASUREMENT

A. The quantity of Compost to be paid for shall be the number of cubic yards furnished in accordance with the plans and specifications, to the satisfaction of the Engineer. The Compost shall be measured as delivered in bulk containers, bags or trucks at point of delivery and as documented by delivery tickets.

PK-ESCR 944.5. PRICES TO COVER

A. The contact prices per cubic yard (CY) for Item No. PK-ESCR 944 COMPOST shall cover the cost of all labor, materials, equipment, insurance, testing and incidentals required furnish, spread, and incorporate COMPOST in planting soil to the satisfaction of the Engineer.

Payment will be made under:

Item No.	Item	Pay Unit
PK-ESCR 944	COMPOST	CY

END OF SECTION

SECTION ESCR-619.3610 – QUICK-CHANGE MOVEABLE CONCRETE BARRIER TRANSFER VEHICLE (QMBTV) – LEASE & MAINTAIN

ESCR-619.3610.1. INTENT. This section describes leasing and maintenance of Quick-change Moveable Concrete Traffic Barrier Transfer Vehicle (Vehicle). For the purposes of this section, leasing of the vehicle refers to procuring the Vehicle and covers leasing, renting, and the use of a Contractor-owned Vehicle.

ESCR-619.3610.2. DESCRIPTION. This item shall consist of procuring a Quick-change Moveable Concrete Traffic Barrier Transfer Vehicle which meets the requirements noted herein, from Lindsay Transportation Solutions (LTS); 180 River Road, Rio Vista, CA 94571; (888) 800-3691; www.barriersystemsinc.com or approved equal. The item shall also include maintaining the Vehicle, and training Vehicle operators.

ESCR-619.3610.3. MATERIALS. The Vehicle shall be on the project site and in good working condition. The Vehicle is capable of performing the following functions:

1. Lateral transfer of continuous lengths of Quick-change Moveable Concrete Barrier (QMCB) from 4 feet to 18 feet;
2. Maintaining a forward speed of at least 5 miles per hour while making lateral transfer moves of the QMCB.
3. The Vehicle is equipped with a Capstan Drive and an engine block heater.

ESCR-619.3610.4. METHODS. The Contractor is responsible for obtaining or entering into an agreement to procure the Vehicle within 30 days upon notification by the Engineer.

1. General:
   The Vehicle designated for use under this item will be used on FDR Drive to facilitate a work zone protection for the limits specified on contract drawings, including lateral movement of QMCB, during the work hours specified in contract documents and approved by Engineer. Each work shift, the Vehicle will be used twice, first to deploy the QMCB prior to work hours, and then to relocate the QMCB back to its stored position.

2. Maintenance:
   The Vehicle shall be stored, when not in use, in an approved storage area. The Contractor shall be required to perform all maintenance operations recommended by the manufacturer of the Vehicle.

   The Vehicle shall be kept in good repair at all times. The Contractor shall expedite repairs necessitated by malfunction of or damage to the Vehicle. Maintenance shall include the periodic cleaning of the Vehicle along with the repair of damage to the protective coating of the Vehicle.

   The Contractor shall have on hand at all times sufficient spare parts.

ESCR-619.3610.5. MEASUREMENT. The quantity to be measured for payment will be the number of months of the Vehicle's use, measured to the nearest ¼ month and contingent on satisfactory maintenance of the Vehicle.

ESCR-619.3610.6. PRICE TO COVER. The Vehicle shall be paid for on a monthly basis which price shall be full compensation for the use and maintenance of the Vehicle as needed and specified by the Engineer. This price shall also include all equipment, tools, labor, services, supplies and incidentals necessary to keep the Vehicle in functional state. Payment shall also include the cost of training Vehicle operators by the manufacturer or its representative.

Payment for the return of the leased vehicle to the owner shall be included under this item.

Payment will be made under:

Item No.	Item	Pay Unit
ESCR-619.3610	Quick Change Moveable Barrier Transfer Vehicle (QMBTV) - LEASE & MAINTAIN	Month

END OF SECTION

SECTION ESCR-619.3614 – QUICK-CHANGE MOVEABLE CONCRETE BARRIER (QMCB) – LEASE AND MAINTAIN

ESCR-619.3614.1. INTENT. This section describes leasing, maintaining and deployment of Quick-change Moveable Concrete Barrier (QMCB)

ESCR-619.3614.2. DESCRIPTION. Under this work the Contractor shall lease, load, unload, transport, and store the QMCB, including any Quick-Lock Variable Length Barrier (QVLB), as indicated on the contract drawings or as ordered by the Engineer.

ESCR- 619.3614.3. MATERIALS. The Barrier is a patented product and shall be obtained from Lindsay Transportation Solutions, (180 River Road, Rio Vista, CA 94571; Phone 888-800-3691; www.barriersystemsinc.com) or approved equal.

ESCR-619.3614.4. METHODS. Barriers will be manufactured by either the wet cast or dry cast methods. Minimum concrete 28-day compressive strength shall be 4 ksi. All surface voids or rock pockets shall be repaired.

The QMCB, when installed in accordance with the manufacturer's instructions, shall be able to resist the impact of vehicles in accordance with the National Cooperative Highway Research Program Report 350 (NCHRP 350) Test Level 3.

The maximum outside dimensions of the QVLB shall not exceed the outside dimensions of the standard Quick-change Moveable Concrete Barrier. The minimum outside cross sectional dimensions of the QVLB inner shell shall not be less than the QMCB dimensions by more than 1 inch at any location. The hinges utilized on the QVLB shall be similar to the hinges used on the remainder of the system. The longitudinal strength of the QVLB under impact shall be consistent with the strength of the standard Quick-change Moveable Concrete Barrier.

The QMCB and QVLB shall be loaded, unloaded and transported to the site as per the Manufacturer's instructions.

ESCR-619.3614.5. MEASUREMENT. This work will be measured by the number of linear feet of QMCB, measured to the nearest foot, including any QVLB, leased, delivered and installed on site. The unit price is not to be altered in any manner.

619.3614.6. PRICE TO COVER. The unit price bid per foot shall include the cost of Labor, materials and equipment needed to satisfactorily complete the work.

Payment will be made under:

Item No.	Item	Pay Unit
ESCR-619.3614	Quick Change Moveable Concrete Barrier (QCMCB) LEASE AND MAINTAIN	L.F.

END OF SECTION

SECTION ESCR-619.37 – QUICK-CHANGE MOVEABLE CONCRETE BARRIER (QMCB) – OPERATION

ESCR-619.37.1. INTENT. This section describes lateral movement of Quick-change Moveable Concrete Barrier (QMCB)

ESCR-619.37.2. DESCRIPTION. Under this work, the Contractor shall furnish, assemble the run, maintain, and remove Quick-change Moveable Concrete Barriers, at the locations and schedules specified in the contract documents, including the lateral movement of the QMCB from the stored position to the construction activity position and from the construction activity position to the stored position as shown on the plans or as ordered by the Engineer. The cost of providing the operators for the Moveable Barrier Transfer Machine shall be included under this item.

ESCR-619.37.3. MATERIALS. The Quick-change moveable barriers shall be manufactured by Barrier Systems, Inc. (180 River Road, Rio Vista, CA 94571; Phone 888-800-3691; www.barriersystemsinc.com) or approved equal. The maximum deflection at NCHRP 350 Test Level 3 shall be 28 inches or less. The barrier segments shall be 32 inches high and 18 inches wide at the base. Each barrier segment shall have a six (6) inch wide, continuous yellow painted stripe applied to the lower six (6) inches of barrier face, prior to installation. The stripe shall be applied along the lower six (6) inches of each exposed face for the full length of the barrier segment. The stripe shall be reflectorized meeting the requirements of **Section 6.44** of the Standard Specifications. The moveable barriers shall be fully compatible with the moveable barrier transfer machine.

ESCR-619.37.4. METHODS. The contractor shall install and move the barriers in accordance with the manufacturer's instructions to locations and schedules as shown in the Contract Documents. Where specified on the Plans, the permanent traffic barriers shall be removed and replaced with deployed QMCB prior to start of work zone operations.

Prior to set-up, the Contractor shall provide the following to the Engineer for approval:

1. Manufacturer's certification that the Barriers are NCHRP 350 approved and meets Test Level 3 conditions.
2. Shop drawings and weight of the barrier pieces.
3. Installation and maintenance details.

The Engineer will inspect the barrier following installation, after each impact, and periodically throughout the duration of the work. Any barrier segment having damage or defect that will adversely affect the performance of the barrier shall be repaired or replaced, within 24 hours, by the Contractor at no additional cost to the City.

Prior to each lateral movement of the QMCB, the Contractor shall give the Engineer ample notice as to when such movement will begin. Minimum movement for payment is 10 feet and anything less than this shall be considered as an incidental movement and shall be included under the price bid for this item. Incidental movement of the barrier to achieve proper alignment or to realign barrier sections disturbed by traffic shall also be included in the price bid.

Once contract work requiring the Quick-change Moveable Barriers is completed, the contractor shall promptly remove the barriers from the work site.

ESCR-619.37.5. MEASUREMENT. The Quick-change Moveable Barriers will be measured for payment by linear foot of barrier satisfactorily used in a new work zone traffic control pattern as shown in the contract documents. Measurement shall be made only once for each work zone traffic control pattern. No separate measurements will be made for each lateral movement of the barriers by the transfer machine.

ESCR-619.37.6. PRICE TO COVER. The unit price bid per linear foot of the Quick-change Moveable Barriers shall include the cost of Labor, materials and equipment needed to satisfactorily complete the work.

Payment will be made under:

Item No.	Item	Pay Unit
ESCR-619.37	Quick Change Moveable Barrier - OPERATION	L.F.

END OF SECTION

SECTION 6.34 T - TEMPORARY CHAIN LINK FENCE AND GATE

6.34 T.1. DESCRIPTION

Under this section, the Contractor shall furnish, erect, maintain, and remove, when directed, Temporary Chain Link Fence and Gate as shown on the Contract Drawings and directed by the Engineer.

6.34 T.2. MATERIALS AND METHODS

All materials and methods shall be as specified in Section 6.34 of the NYC Department of Transportation, Standard Highway Specifications, with the following modifications and additions:

Temporary Chain Link Fence and Gate to be furnished under section 6.34 T, shall consist of chain link fence fabric, top and bottom tension wires, gates, posts to be embedded in the pavement, and all necessary incidental in accordance with the Contract Drawings and the directions of the Engineer.

Temporary Chain Link Fence to be furnished under Item 6.34 ACTP, shall consist of chain link fence fabric, top and bottom rails for mounting a decorative mesh (to be furnished under another item), gates, posts with steel plate footings, sand bags to hold fence in place, and all necessary incidental in accordance with the Contract Drawings and the directions of the Engineer.

When directed by the Engineer, the Contractor shall remove and dispose of the temporary chain link fence and gate to the satisfaction of the Engineer. The Contractor shall then fill any holes left in the pavement with compacted clean sand to grade.

6.34 T.3. MEASUREMENT

The quantities of Temporary Chain Link Fence to be measured for payment shall be the number of linear feet satisfactorily installed, complete, measured in place, from center to center of end posts.

Payment will be made for the Temporary Chain Link Fence and Temporary Chain Link Gate only for the initial installation at any location. Whenever temporary chain link fence and/or temporary chain link gate is moved to a new location, as required by the Plans or directed by the Engineer, payment will be made in the same manner as if it were an initial installation.

However, no payment will be made: for movements of the temporary chain link fence and/or temporary chain link gate made for the Contractor's convenience; for movement of temporary chain link fence and/or temporary chain link gate at a given location at the end of a work period and subsequent replacement at the same location at the beginning of the next work period; for movement of temporary chain link fence and/or temporary chain link gate at a given location during a work period and subsequent replacement at the same location during the same work period; or for the interchanging of temporary chain link fence and/or temporary chain link gate between initial installations.

6.34 T.4. PRICE TO COVER

The price bid for the Temporary Chain Link Fence and for Temporary Chain Link Gate shall be a unit price per linear foot and shall cover the cost of all labor, materials, plant, equipment, insurance, and necessary incidentals required to furnish, install, maintain, and remove temporary

chain link fence and/or temporary chain link gate; all in accordance with the Contract Drawings, the specifications and the directions of the Engineer.

Payment will be made under:

Item No.	**Item Description**	**Pay Unit**
6.34 ACTP	Temporary Chain Link Fence, 6'-0" High (with Top and Bottom Rails and Posts Mounted on Steel Plates)	L.F.
6.34 ACT	Temporary Chain Link Fence, 6'-0" High	L.F.
6.34 BCT	Temporary Chain Link Fence Gate for 6'-0" High Fence	L.F.
6.34 ADT	Temporary Chain Link Fence, 8'-0" High	L.F.
6.34 BDT	Temporary Chain Link Fence Gate for 8'-0" High Fence	L.F.

END OF SECTION

SECTION 6.29 LSSR - REMOVE, STORE AND REINSTALL PERMANENT DEDICATED
Lane Separator System with Reboundable Bollards

6.29 LSSR.1 Description

Under this section, the Contractor shall remove, store and reinstall existing Permanent Dedicated Lane Separator System with Reboundable Bollards in accordance with the plans, the specifications and the directions of the Engineer.

6.29 LSSR.2 Material

The existing Permanent Dedicated Lane Separator System with Reboundable Bollards shall be used for the reinstallation. All removed Permanent Dedicated Lane Separator System with Reboundable Bollards shall be stored at the site in a location approved by the Engineer.

The Contractor shall assume the need to obtain various hardware replacement parts such as pavement anchors, etc.

6.29 LSSR.3 Methods

The Contractor shall inspect the existing system and obtain the respective manufacturer's installation manual / instructions. The contractor shall notify the Engineer of any visible defects in the existing system prior to removal.

The Contractor shall carefully remove the existing Permanent Dedicated Lane Separator System with Reboundable Bollards per the manufacturer's instructions, clean and store all materials for reuse. All work shall be done in workman like manner. Care shall be taken not to disturb the surrounding area. Any loss or damage done to the system designated to be reinstalled that was caused by the Contractor's operation shall be replaced in kind to the original condition as determined by the Engineer, at no cost to the City.

The Contractor shall obtain and use all recommended hardware in accordance with the manufacturer's instructions for the reinstallation of the system or as approved by the Engineer.

Existing Permanent Dedicated Lane Separator System with Reboundable Bollards that were not reinstalled shall become the Contractor's property and shall be properly disposed of off the site.

6.29 LSSR.4 Measurement

The quantity to be measured for payment shall be the actual number of linear feet of existing Permanent Dedicated Lane Separator System with Reboundable Bollards reinstalled at the site to the satisfaction of the Engineer. The number of linear feet of existing Permanent Dedicated Lane Separator System with Reboundable Bollards removed and stored but not reinstalled at the site shall not be measured for payment.

6.29 LSSR.5 Price to Cover

The unit price bid per linear foot of existing Permanent Dedicated Lane Separator System with Reboundable Bollards reinstalled at the site shall cover the cost of all labor, material, equipment, insurance, and incidentals required to complete the work of removal, storing and reinstalling the existing permanent dedicated lane separator system with reboundable bollards. The unit price bid shall also include, but not be limited to, the cost of existing Permanent Dedicated Lane Separator System with Reboundable Bollards removed and stored but not reinstalled at the site, disposal of that material, and all necessary drilling, grouting, centering, miscellaneous hardware, anchor bolts, and incidental expenses necessary to complete the work; all in accordance with the Contract Drawings, the specifications and directions of the Engineer.

Payment will *be made under:*

Item No.	Description	Pay Unit
6.29 LSSR	Remove, Store and Reinstall Permanent Dedicated Lane Separator System with Reboundable Bollards	LF

END OF SECTION

S - PAGES

SPECIAL PROVISIONS

NOTICE

THE PAGES CONTAINED HEREIN (S-PAGES) ARE GENERAL SPECIAL PROVISIONS AND PROJECT SPECIFIC PROVISIONS THAT SHALL APPLY TO AND BECOME A PART OF THE CONTRACT.

(NO TEXT ON THIS PAGE)

(A) GENERAL SPECIAL PROVISIONS

TABLE OF CONTENTS

ARTICLE	DESCRIPTION	PAGE NO.
A1	LINES AND GRADES	S-4
A2	SPECIFIC TRAFFIC STIPULATIONS	S-4
A3	HOLIDAYS CONSTRUCTION EMBARGO	S-4
A4	CONTRACT ITEMS THAT INCLUDE BACKFILL AS PART OF THEIR WORK	S-5
A5	ACCELERATED PROJECT SCHEDULE AND COMBINATION OF STAGES	S-5
A6	DISPOSAL OF EXCESS EXCAVATED MATERIAL	S-5
A7	NO EXTENSIONS OF TIME FOR WINTER SHUT-DOWN	S-5
A8	PRIVATE UTILITY HARDWARE ADJUSTMENTS	S-5
A9	SURVEY MONUMENTS	S-6
A10	RESTORATION OF ADJACENT AREAS	S-6
A11	USE OF CITY WATER	S-6
A12	ITEM NO. “6.52 FED”	S-6
A13	FUEL COST	S-6
A14	DPR CONSTRUCTION PERMITS	S-6
A15	START OF CONTRACT WORK	S-6
A16	N.Y.C. TRANSIT INSURANCE	S-6
A17	TREE BARRIERS	S-9
A18	UTILITIES	S-9
A19	HOUSE CONNECTIONS	S-9
A20	VICTAULIC STYLE 77 COUPING	S-9
A21	STREET LIGHT AND TRAFFIC SIGNAL	S-10
A22	SAW CUT	S-10

A23	PRE-CONSTRUCTION STAGE	S-10
A24	EXISTING SEWERS. WATER AND APPURTENANCE	S-10
A25	RECONNECTING EXISTING SEWERS TO NEW MANHOLES	S-10
A26	THE CONTRACTOR IS ADVISED	S-11
A27	THE CONTRACTOR IS ADVISED	S-11
A28	NO ADDITIONAL PAYMENT	S-11
A29	SHEETING AND EXCAVATION AT TRANSIT FACILITIES	S-11
A30	ARCHEOLOGICAL DISCOVERIES	S-11
A31	PRICES TO INCLUDE	S-12

(NO TEXT ON THIS PAGE)

(A) GENERAL SPECIAL PROVISIONS

A1. LINES AND GRADES. The Contractor shall furnish lines and grades in accordance with Section 1.06.27 of the NYCDOT Standard Highway Specifications, except that survey controls established for this project may no longer exist and the Contractor shall be required to re-establish the survey control information using official Borough Survey Control Monuments and Bench Marks, where they exist. The Contractor shall check with Topographic Section of the Borough President's Office as to the reliability and accuracy of the data to be used for lines and grades.

A2. SPECIFIC TRAFFIC STIPULATIONS. Under this contract, the Contractor shall perform the work in strict accordance with the requirements of Section 6.70 in the Standard Highway Specifications, specific traffic stipulations as called for on the plans, OCMC Traffic Stipulations attached to the end of these Special Provisions, and the directions of the Engineer. In case of a conflict, the Engineer's decision shall be final.

In addition, the cost of compliance with requirements of the OCMC Traffic Stipulations, unless otherwise provided for, shall be deemed included in the prices bid for all scheduled items.

In addition to the requirements provided in the OCMC Traffic Stipulations, Traffic Enforcement Agents (TEA) are required as follows:

1. Full closures of the FDR Drive northbound or southbound: TEA at 38 locations per closure, with one TEA per location. Locations to be confirmed with the Engineer prior to the Contractor's submission of MPT plans for approval by the Engineer.
2. All other closures, including partial closures of the FDR Drive: No TEA are anticipated to be required.

A3. HOLIDAY CONSTRUCTION EMBARGO. A special Holiday Construction Embargo shall be in effect on the Friday of the week preceding Thanksgiving Day week from 6:00 AM to 11:59 PM and again from the Monday of Thanksgiving Day week from 6:00 AM through January 2, at 11:59 PM. Roadway and sidewalk construction activities will be restricted during the embargo period on the streets listed below*.

Any permits issued prior to the date of this notice, for work during this embargo period on the streets listed below which do not already have the permit stipulation "410" are hereby suspended for the period noted above. All permittees must comply with this embargo unless a special waiver is granted by OCMC. Waiver requests must be
filed at least thirteen days before Thanksgiving Day, in the Permit Office by filing a "Request for Roadway/Sidewalk Permits During
"Embargo Periods" and submitting supporting documentation. Waiver requests should only be submitted for critical reasons for a specific project. If a waiver is granted, the applicant will be notified so they can apply for the approved permits. Waivers **are not** required for ongoing Building Construction Activity Permits which already include the "410" permit stipulation. Waiver request forms may be obtained at any Permit Office or on the Department of Transportation's website at: **http://www.nyc.gov/html/dot/downloads/pdf/holidayembapp.pdf**

Prior to this embargo period all necessary measures must be taken so that all roadways and sidewalks are in proper condition to allow for the expeditious and safe movement of vehicular, bicycle and pedestrian traffic. Tool carts, cable reels, containers, and material stored on roadways must be removed during the embargo period.

The opening of utility access covers is prohibited on any of the streets noted below between the hours of 6:00 AM and midnight unless the utility or Contractor files for an Emergency Authorization Number as required by section 2-07 of the Department of Transportation's Highway Rules. The planned opening of utility access covers may occur during the hours of 12:01 AM and 5:59 AM where no authorization number is required.

Temporary restoration of the streets and sidewalks and removal thereof, if required for the Holiday Embargo period, will be paid for under the appropriate scheduled items.

No extension of time due to the shutdown period will be granted to the Contractor for completion of the work.

*** Please note that this embargo only applies to NYCDOT construction permits.**
*** List of street and maps of the affected locations are available by borough on the Department of Transportation's website at:**
http://www.nyc.gov/html/dot/html/motorist/trafalrt.shtml

A4. CONTRACT ITEMS THAT INCLUDE BACKFILL AS A PART OF THEIR WORK. The following shall pertain to all contract items that have backfill as a part of their work: Backfilling shall comply with Subsection 4.11.3 of the Standard Specifications and no additional payment will be made for any Highway or Street Lighting work item requiring Contractor to furnish additional fill material to meet these requirements when backfilling.

A5. ACCELERATED PROJECT SCHEDULE AND COMBINATION OF STAGES. Contractor shall plan and/or stage the Contractor's work schedule using all hours/days available. Contractor is advised that all applicable unit prices shall include, for the purpose of this contract, all overtime costs, premium time costs, shift differentials required to complete construction within the specified "Time(s) of Completion" stipulated in this contract.

Contractor shall be permitted to accelerate this project, to combine stages and/or work sequences. Any such changes shall be shown in the construction schedule, to be furnished in accordance with the General Provisions of the Standard Specifications and the "CRITICAL PATH METHOD (CPM) SCHEDULE" Article and shall be submitted for approval of the Engineer.

A6. DISPOSAL OF EXCESS EXCAVATED MATERIAL. All excess excavated material, with the exception of contaminated material, shall become the property of the Contractor and shall be properly disposed of away from the site, at the Contractor's expense. Contaminated material shall be disposed of separately in accordance with contract requirements.

A7. NO EXTENSION OF TIME FOR WINTER SHUT-DOWN. Where the Contractor's approved work schedule for installing sidewalk, curb, roadway base and/or pavement falls within the winter period of December 1st through April 1st, the Contractor will NOT be granted an extension of time for completion of this contract due to the winter shut-down period, unless otherwise provided in Schedule A.

A8. PRIVATE UTILITY HARDWARE ADJUSTMENTS. will be performed by the owning utility company or its agent, at its expense. The Contractor shall notify the utility company 72 hours prior to start of work at each location where its hardware requires adjustment.

A9. SURVEY MONUMENTS. When working in the vicinity of survey monument the Contractor shall hand excavate per Item 8.02 A and 8.02 B at City Survey Monuments, for a distance of five (5) feet around each monument, as directed by the Engineer.

A10. RESTORATION OF ADJACENT AREAS. The Contractor shall be required to remove all form work. In planting strip areas, the Contractor shall be required to restore areas damaged as a result of the Contractor's operations, to the satisfaction of the Engineer, with sod. The Contractor shall also, as directed by the Engineer, make safe adjacent areas to the Contractor's work, such as: restoring missing or damaged pavement markings that were removed or damaged as a result of the Contractor's operations (as per requirements of Section 6.44 in the Standard Specifications); resetting granite blocks in tree pits; and, applying asphaltic concrete mixture (Item 4.02 CB) where badly broken sidewalk or curb may create a dangerous condition just outside the Contractor's area of operation, where and when directed by the Engineer.

All restoration work shall be done to the satisfaction of the Engineer.

A11. USE OF CITY WATER. The Contractor is notified that for use of City water under this project the Contractor shall be required to obtain a water use permit from the Department of Environmental Protection at the Contractor's own cost.

A12. ITEM NO. "6.52 FED". The contractor is notified that wherever the Item No. "6.52 CG" and words "Crossing Guard" are used in the Contract Documents and Drawings it shall mean the Item No. "6.52 FED" and the words "Uniformed Flagperson", respectively.

A13. FUEL COST. The Contractor is notified that the fuel cost per gallon used in the formula under Sub-Article 26.2.8 of the Standard Construction Contract for **Extra Work** will be derived from the fuel price index for the United States East Coast published weekly by the United States Energy Information Administration ("USEIA"), and available on its website at http://www.eia.gov/petroleum/gasdiesel/. The USEIA-published cost per gallon for the applicable fuel on the East Coast for the week in which the first day of each calendar quarter during the contract term occurs (i.e., January 1st, April 1st, July 1st and September 1st) will be used in the reimbursement formula for all **Extra Work** invoiced that was performed during that calendar quarter. Should the USEIA stop publishing this fuel price index, the fuel cost per gallon will be determined by reference to a substitute index to be agreed upon by the Contractor and the City. Fuel reimbursed under the method described in this article is not eligible for the Fuel Price Adjustment payment under Item 698.05.

A14. DPR CONSTRUCTION PERMITS. NYC Department of Parks and Recreation (DPR) Construction Permits are required for all work on parkland or on sidewalks adjacent to parks or other areas maintained by DPR.

A15. START OF CONTRACT WORK. The Contractor is notified that a Notice To Proceed (NTP) date will be issued for work to commence within 21 to 30 Days of Contract Registration.

A16. N.Y.C. TRANSIT INSURANCE. The Contractor (Permittee) shall indemnify and save harmless the City of New York and the New York City Transit (Permittor) in accordance with the following "Insurance Requirements" and proof that the necessary insurance is in effect will be required before work can commence:

NYCT "OUTSIDE CONTRACT" INSURANCE REQUIREMENTS

1. The Permittee at its sole cost and expense shall carry or cause to carried and shall maintain at all times during the period of performance under this Agreement policies of insurance as herein below set forth below:

(A) Workers' Compensation Insurance (including Employer's Liability Insurance) with limits as specified in Schedule A, which limit may be met by a combination of primary and excess insurance meeting the statutory limits of New York State. The policy shall be endorsed to include Longshoreman's and Harbor Workers' Compensation Act/Maritime Coverage Endorsement and/or Jones Act Endorsement when applicable.

(B) Commercial General Liability Insurance (I.S.O. 2001 Form or equivalent) approved by Permittor in the Permittee's name with limits of liability as specified in Schedule A for each occurrence on a combined single limit basis for injuries to persons (including death) and damages to property. The limits may be provided in the form of a primary policy or combination of primary and umbrella/excess policy. When the minimum contract amounts can only be met when applying the umbrella/excess policy; the Umbrella/Excess Policy must follow form of the underlying policy and be extended to "drop down" to become primary in the event primary limits are reduced or aggregate limits are exhausted. Such insurance shall be primary and non-contributory to any other valid and collectable insurance and must be exhausted before implicating any Permittor/MTA policy available.

Such policy should be written on an occurrence form; and shall include:

- Contractual coverage for liability assumed by the Permittee under this agreement;
- Personal and Advertising Injury Coverage;
- Products-Completed. Operations;
- Independent Contractors Coverage;
- "XCU" coverage (Explosion, Collapse, and Underground Hazards) where necessary;
- Contractual Liability Exclusion, applicable to construction or demolition operations to be performed within 50 feet of railroad tracks, must be voided, where necessary; and,
- Additional Insured Endorsement (I.S.O. Form CG 20 26 07/04 version or equivalent) approved the Permittor naming:

New York City Transit Authority (NYCTA), the Manhattan and Bronx Surface Transit Operating Authority (MaBSTOA), the Staten Island Rapid Transit Operating Authority (SIRTOA), MTA Capital Construction Co., the Metropolitan Transportation Authority (MTA) including its subsidiaries and affiliates, and the City of New York (as Owner).

(C) Business Automobile Liability Insurance Policy - (I.S.O. Form CA 00 01 10 01 or equivalent) approved by the Permittor is required if Permitee's vehicle enters Permittor property. The insurance must be in the name of the Permittee or its contractor entering the Permittor property with limits of liability in the amount specified in Schedule A for claims for bodily injuries (including death) to persons and for damage to property arising out of the ownership, maintenance or use of any owned, hired or non-owned motor vehicle.

(D) Railroad Protective Liability Insurance policy shall be required as specified in Schedule A.

(E) Environmental/Pollution Exposures In the event environmental or pollution exposures exist, the Permittee shall require the environmental contractor or sub-contactor to provide the applicable insurance covering such exposure. The limits and type of insurance provided shall be satisfactory to the Permittor and will be confirmed to the parties prior to the start of the work.

2. General Requirements Applicable to Insurance Policies

(a) All of the insurance required by this Article shall be with Companies licensed or authorized to do business in the State of New York with an A.M. Best Company rating of not less than A-/VII or better and reasonably approved by the *Permittor/MTA and shall deliver evidence of such policies.*

(b) Except for Workers Compensation, all references to forms and coverages referred to above shall be the most recent used by the Insurance Services Office, Inc. (ISO") or equivalent forms approved by the Insurance Department of the State of New York, provided, however, that excess coverages may be written on forms reasonably acceptable to Permittor containing provisions other than those contained in ISO forms but otherwise conforming in substance to the requirements of this Article.

(c) The Permittee or its Contractor performing the work shall furnish evidence of all policies before any work is started to the permittor using the following link
https://us.marketplace.asite.com/marketplace/main/detail/28/1/1/5512158/forms

These policies must: (i) be written in accordance with the requirements of the paragraphs above, as applicable; (ii) be endorsed in form acceptable to include a provision that the policy will not be canceled, materially changed, or not renewed, unless otherwise indicated herein, at least thirty (30) days prior written notice to the Permittor c/o MTA Risk and Insurance Management (MTA RIM) Department – Standards, Enforcement & Claims Unit, 2 Broadway – 21st floor, New York, NY 10004; and (iii) state or be endorsed to provide that the coverage afforded under the contractor's policies shall apply on a primary and not on an excess or contributing basis with any policies which may be available to the Permittor/MTA, and also that the contractor's policies, primary and excess, must be exhausted before implicating any Permittor/MTA policy available. (iv) In addition, contractor's policies shall state or be endorsed to provide that, if a subcontractor's policy contains any provision that may adversely affect whether contractor's policies are primary and must be exhausted before implicating any Permittor/MTA policy available, contractor's and subcontractor's policies shall nevertheless be primary and must be exhausted before implicating any Permittor/MTA policy available. Except for Professional Liability, policies written on claims made basis are not acceptable. At least two (2) weeks prior to the expiration of the policies, contractor shall endeavor to provide evidence of renewal or replacement policies of insurance, with terms and limits no less favorable than the expiring policies. Except as otherwise indicated in the detailed coverage paragraphs below, self-insured retentions and policy deductibles shall not exceed $100,000, unless such increased deductible or retention is approved by Permittor/MTA. The Permittee shall be responsible for all claim expense and loss payments within the deductible or self-insured retention. The insurance monetary limits required herein may be met through the combined use of the insured's primary and umbrella/excess policies.

(d) Certificates of Insurance may be supplied as evidence of policies of the above policies, except for Policy (D) Railroad Protective Liability Insurance Policy. However, if requested by the Permittor, the Permittee shall deliver to the Authority, within forty-five (45) days of be request, a copy of such policies, certified by the insurance carrier as being true and complete. The Railroad Protective Liability Insurance Policy must be provided in the form of the Original Policy. A detailed Insurance Binder may be provided, ACORD or Manuscript Form, pending issuance of the Original Policy. The Original Policy must be submitted to MTA RIM within 30 days of the Binder Approval.

(e) If a Certificate of Insurance is submitted, it must: (1) be provided on the Permittor Certificate of Insurance Form or MTA Certificate of Insurance Form for Joint Agency Agreements; (2) be signed by an authorized representative of the insurance carrier or producer and notarized; {3) disclose any deductible, self-insured retention, sub-limit, aggregate limit or any exclusions to the policy that materially change the coverage; (4) indicate the Additional Insureds and Named Insureds as required herein, along with a physical copy of the Additional Insured Endorsement (I.S.O. Form CG 20 26 07/04 version or equivalent), as applicable and the endorsement(s) must include policy number(s); (5) reference the Contract by number on the face of the certificate; and (6) expressly reference the inclusion of all required endorsements.

(f) The minimum amounts of insurance required in the detail description of policies (A), (B), (C), and (D) above shall not be construed to limit the extent of the Permittee's liability under this Agreement.

(g) If, at any time during the period of this Agreement, insurance as required is not in effect, or proof thereof is not provided to the Permittor, the Permittor shall have the options to:

(i) direct the Permittee to suspend work or operation with no additional cost or extension of time due on account thereof; or
(ii) (ii) treat such failure as an Event of Default.

A17. TREE BARRIERS. The Contractor shall furnish, install, maintain and subsequently remove temporary Protective Tree Barriers. Protective Tree Barriers shall be Type B, unless otherwise directed by the Engineer, and shall be constructed and installed as shown on the Protective Tree Barrier sketch in Department Of Transportation, Standard Highway Details Of Construction, Drawing No. H-1046A, as directed by the Engineer, and in accordance with Department of Parks and Recreation requirements.

Price of the tree barriers must be deemed included in the in the unit prices bid for all scheduled items.

A18. UTILITIES. All utility locations and invert elevations are not guaranteed, nor is there any guarantee that all existing utilities, whether functional or abandoned within the project area are shown.

A19. HOUSE CONNECTIONS. All existing house connections shall be maintained and supported during construction. The Contractor shall replace any existing house connection damaged as a result of the Contractor's construction operations as ordered by the Engineer at no cost to the City.

A20. VICTAULIC STYLE 77 COUPLING. The Contractor is notified that Victaulic Style 77 Coupling is no longer acceptable for use in any steel water main work. All reference to Victaulic Style 77 Coupling within the Standard Sewer And Water Main Specifications of the Department of Environmental Protection (dated July 1, 2014), the Water Main Standard Drawings of the Department of Environmental

Protection (latest revisions), the Specifications For Trunk Main Work (dated July 2014), and the contract drawings, shall be replaced with Bolted Split-Sleeve Restrained Coupling.

A21. STREET LIGHT AND TRAFFIC SIGNAL. The Contractor is responsible for any damage to the existing street lighting and traffic signal equipment, including underground conduits and the safety of both pedestrian and vehicular traffic for the duration of the contract.

Should any conduits, cables or foundations need repair due to the Contractor's negligent operations during construction, all work shall be performed according to NYCDOT Bureau of Traffic's Standard Drawings and Specifications and City of New York DOT System Engineering Specifications (dated November 2013) at the sole expense of the Contractor.

It is the Contractor's responsibility to secure an approved electrical contractor to perform all traffic signal work (if any). For list of approved electrical contractors, contact Mr. Michael R. LeFosse of New York City Department of Transportation at (212) 839-3799.

A22. SAW CUT. The Contractor is advised that where the existing roadway pavement is designated to be replaced from curb to curb, then no full depth saw cutting of pavement for sewer and water main trenches will be required, except at the limits of full width pavement restoration. No separate or additional payment will be made for any saw cutting.

A23. PRE-CONSTRUCTION STAGE. The Contractor is advised that the Base Contract Duration (consecutive calendar days "ccds") must also include pre-construction stage from the Notice To Proceed date. During this stage the contractor is required to submit the necessary shop drawings, obtain all permits and submit the health and safety plan for review and approval. The Engineer's field office will also need to be established during this pre-construction stage period. Failure to comply with the pre-construction stage requirements may result in assessing liquidated damages to the contractor for everyday beyond the pre-construction stage duration. The liquidated damage will be of equivalent value as identified in the Schedule A for work beyond the construction completion date.

A24. EXISTING SEWERS, WATER AND APPURTENANCE. The Contractor is notified that at some locations there may exists sewers, manholes, water mains, etc., which are to remain undisturbed and are in close proximity to the line of the proposed work. The Contractor shall exercise extreme care, minimize the trench width of the proposed sewers and take all necessary precautions in placing sheeting and during excavation of the trenches to prevent any damage to the existing structures, pavement, curbs, and sidewalks that are to remain while working adjacent to them. The Contractor maybe restricted to use wood sheeting at certain critical locations as directed by the Engineer. Should any damage occur to any portion of the existing structures that are to remain due to the Contractor's operations, the Contractor shall make all repairs to the existing structures to the satisfaction of and as directed by the Engineer. The cost of such repair shall be borne by the Contractor, at no cost to the City. Additional cost to use wood sheeting specifically to ensure integrity of existing sewer structures will be deem included in all bid items for work.

A25. RECONNECTING EXISTING SEWERS TO NEW MANHOLES. If there are locations on the contract plans, where the Contractor is required to reconnect all existing sewers to the proposed manholes in this contract. The said manholes shall be fabricated to provide openings for the existing sewers at the specified invert elevations as shown on the contract drawings. The cost of reconnecting existing sewer pipes to new manholes, including concrete collar with steel reinforcements and/or grouting around the existing sewer pipes at the openings and all work necessary to complete the pipe reconnection, to the satisfaction of the Resident Engineer shall be deemed included in the prices bid for all items of work. No additional payment shall be made.

A26. THE CONTRACTOR IS ADVISED that during pre-construction stage from the Notice To Proceed date; the contractor is required to submit the necessary shop drawings, obtain permits and submit the health and safety plan for review and approval. The Engineer's field office will also need to be established during this pre-construction stage period. Failure to comply with the pre-construction stage requirements may result in assessing liquidated damages to the contractor for everyday beyond the pre-construction stage duration. The liquidated damage will be of equivalent value as identified in the Schedule A for work beyond the construction completion date.

A27. THE CONTRACTOR IS ADVISED that any City owned light poles, traffic signals, street name signs, traffic signs and encumbrances including, but not limited to, underground conduit displaced as the result of the installation of the new sewers, water mains, catch basins, catch basin connections and appurtenances shall be replaced in kind and as directed by the Engineer. The cost of such work shall be deemed included in the prices bid for all items of work under this contract.

A28. NO ADDITIONAL PAYMENT. The Contractor is advised that any fences, guardrails, boulders, asphalt walkway of the park, fixtures, other encumbrances removed within project limits during construction shall be replaced in kind to the satisfaction of the Engineer. The cost of such work shall be deemed included in the prices bid for all contract items of work and no additional or separate payment shall be made.

A29. SHEETING AND EXCAVATION AT TRANSIT FACILITIES. In case of transit facilities like MTA, LIRR, METRO NORTH etc., the Contractor shall exercise extreme caution and take all necessary precautions in placing sheeting and excavation to prevent any damage to the existing underground or overhead structures and its appurtenances during construction work throughout the project area. The Contractor must take full responsibility to protect the said structures and its appurtenances and any damage caused by the Contractor's operations ~~shall~~ must be made good by the Contractor to the satisfaction of the Engineer at no additional cost to the City.

The Contractor shall submit shop drawings to the Transit facilities showing all the details and methods of construction, such as, sheeting and bracing, including the Contractor's procedure and sequence of construction, supporting and/or protection of the existing structures and its appurtenances, with necessary design calculations for approval prior to starting of the construction. The design shall be made by a New York State Licensed Professional Engineer skilled in this type of construction and as further evidenced by the imprint of Professional Engineer's seal and signature on all drawings. The cost of this work shall be deemed included in the price bid for all items of work under this contract.

A30. ARCHAEOLOGICAL DISCOVERIES. The Contractor is notified that the Resident Engineer will retain the services of an Archaeologist (the "City's Archaeologist") for this project.

The City's Archaeologist shall be notified in advance and shall be present on site during sub-surface excavations as the City's Archaeologist deems necessary. The City's Archaeologist shall be authorized to halt construction at any time in order to record and/or recover any archaeological resources encountered during excavations, and to stabilize in place any human remains encountered. For the purpose of evaluating and recording archaeological resources, the City's Archaeologist shall be allowed to enter trenches provided all standard safety requirements are met. It is understood that some construction down time may be necessary.

In the event that human remains and/or other significant archaeological deposits are encountered during construction or archaeological investigations, Landmarks Preservation Commission (LPC) shall be notified as directed by the City's Archaeologist and the State Historic Preservation Office (SHPO) requires that the following protocol is implemented:

- At all times human remains must be treated with the utmost dignity and respect. Should human remains be encountered work in the general area of the discovery will stop immediately and the location will be immediately secured and protected from damage and disturbance.

- Human remains or associated artifacts will be left in place and not disturbed. No skeletal remains or materials associated with the remains will be collected or removed until appropriate consultation has taken place and a plan of action has been developed.

- The County coroner and local law enforcement as well as the SHPO and the involved agency will be notified immediately. The coroner and local law enforcement will make the official ruling on the nature of the remains, being either forensic or archeological. If the remains are archeological in nature, a bioarchaeologist will confirm the identification as human.

- If human remains are determined to be Native American, the remains will be left in place and protected from further disturbance until a plan for their protection or removal can be generated. The involved agency will consult SHPO and appropriate Native American groups to determine a plan of action that is consistent with the Native American Graves Protection and Repatriation Act (NAGPRA) guidance.

- If human remains are determined not to be Native American, the remains will be left in place and protected from further disturbance until a plan for their avoidance or removal can be generated. Consultation with the SHPO and other appropriate parties will be required to determine a plan of action.

Should extra work be ordered by the Resident Engineer as a result of any archaeological discoveries, it shall be paid for as extra work in accordance with the requirements of Article 26 in the Standard Construction Contract.

A31. PRICES TO INCLUDE. No direct payment will be made for costs incurred in complying with the foregoing Special Provisions, unless otherwise provided. Said costs will be deemed to have been included in the prices bid for all the scheduled contract items.

(B) HIGHWAY SPECIAL PROVISIONS (JOB SPECIFIC)

TABLE OF CONTENTS

ARTICLE	DESCRIPTION	PAGE NO.
B1	CRITICAL PATH METHOD (CPM) SCHEDULE	S-14
B2	SUBMITTAL PROCEDURES	S-26
B3	SPECIAL CONDITIONS FOR MARITIME, WATERFRONT, AND FLOATING PLANTS	S-33
B4	U.S. COAST GUARD REQUIREMENTS	S-49
B5	GREENHOUSE GAS EMISSIONS	S-56
B6	EMPLOYMENT OPPORTUNITIES	S-57
B7	WORK RESTRICTIONS	S-59
B8	VALUE ENGINEERING CHANGE PROPOSAL (VECP)	S-60
B9	REFERENCE DOCUMENTS	S-67
B10	ENVISION	S-68
B11	PAYMENT FOR MAINTENANCE AND PROTECTION OF TRAFFIC	S-69
B12	SPECIAL INSPECTION AND DEPARTMENT OF BUILDINGS	S-70
B13	COORDINATION WITH OTHER CONTRACTORS	S-71
B14	REVISIONS: SPECIFICATIONS AND CONTRACT DRAWINGS	S-72
B15	U.S. ARMY CORPS OF ENGINEERS REQUIREMENTS	S-74
B16	STEAM LINE AT REGULATOR M-27	S-76
B17	OMITTED WORK	S-77

B1. CRITICAL PATH METHOD (CPM) SCHEDULE

The requirements of this article supersede the requirements of NYCDOT Standard Highway Specifications **Section 1.06.25**.

1.1 DESCRIPTION

A. This section specifies the procedures and requirements, which the Contractor must follow for documenting the progress of the Work. Among the requirements specified are schedule development and maintenance as well as associated submittal requirements.

B. The Contractor must submit a Progress Schedule in compliance with Article 9 of the Standard Construction Contract. The Contractor's Progress schedule must be a Critical Path Method Progress Schedule prepared using Primavera P6 software (P6), which demonstrates complete fulfillment of all work shown in the contract documents. The Contractor must, on at least a monthly basis, revise and update the Progress Schedule, and use it in planning, coordinating, and performing all work. Schedule activities must accurately depict the entire scope of work to be performed to complete the project including, but not limited to, all work to be performed by the Contractor, subcontractors, fabricators, suppliers, consultants, the Department, and others, contributing to the project.

1.2 RELATED DOCUMENTS

- Payment Procedures (Articles 41, 42, 43, 44, 45 and 46 of the Standard Construction Contract).
- Request for Information or Approval (Article 10 of the Standard Construction Contract).
- Submittal Procedures (Article B2 of the Special Provisions [S-Pages]).
- Definitions (Article 2 of the Standard Construction Contract).
- Progress Schedules –(Article 9 of the Standard Construction Contract).

1.3 ACTION SUBMITTALS

A. Project Scheduler's Resume: The name, resume and work experience of the Contractor's Project Scheduler must be submitted to the Engineer and approved before Work on the Schedule Document begins. The resume of the proposed Project Scheduler must include the duties, responsibilities, and accomplishments which establish the candidate's scheduling and construction experience. Should the Contractor utilize a Scheduling Consultant, the Consultant's name and work experience must be submitted to the Engineer and approved before the Consultant begins work on the Schedule Document. If either, the proposed Consultant or the Contractor's Project Scheduler are not approved, the Contractor must propose an alternate Consultant or another Project Scheduler that meets the experience requirements within five (5) working days. The Engineer has the right to reject the Project Scheduler and/or the Consultant based upon lack of experience as required herein. Rejection by the Engineer of the proposed Project Scheduler and/or the Consultant will not be allowed as a basis for an extension of time to submit any of the required Schedule Document(s).

B. CPM Schedule: The CPM Schedule must be prepared using Primavera Project Management Software P6 V15 or newer. Using Critical Path Method ("CPM") techniques, the schedule must accurately represent the Contractor's plan for the timely completion of the Work and must be submitted in the following formats:

1. Preliminary CPM Schedule: No later than 15 Days (CCD) after receipt of the Notice to Proceed, the Contractor must make a presentation to the Engineer concurrently with the submittal for acceptance of the Preliminary CPM Schedule defining the Contractor's

planned activities during the first 90 Days. The Preliminary CPM Schedule must contain in detail the Contractor's proposed schedule of Work to be commenced within the first 90 Days after the Notice to Proceed. This Preliminary CPM Schedule must include, in a summary format, the balance of Work leading to the Project's Substantial Completion. The Preliminary CPM Schedule package may be conditionally accepted by the Engineer pending acceptance of the Baseline CPM Schedule. The conditionally accepted Preliminary CPM Schedule must be updated monthly until the Detailed CPM Schedule is accepted. The Contractor may make no changes to the conditionally accepted Preliminary CPM Schedule without the approval of the Engineer.

2. Baseline CPM Schedule: No later than 45 Days after receipt of the Notice to Proceed, the Contractor must make a presentation to the Engineer concurrently with the submittal for acceptance of the complete CPM Schedule Documents which must incorporate the entire scope of the Work. This schedule, once approved by the Engineer, will be the Baseline CPM Schedule and will be considered the schedule of record unless a Baseline CPM Schedule revision is accepted by the Engineer. The most up to date Baseline CPM Schedule or Baseline CPM Schedule revision accepted by the Engineer must be considered the Current Baseline Schedule or the schedule of record.

3. Changes to the Baseline Schedule: No changes are permitted to the Baseline CPM Schedule including but not limited to Activity ID, logic, durations, budgeted quantities of both materials and man-hours unless submitted, reviewed and accepted by the Engineer prior to their insertion into the CPM Schedule.

4. CPM Logic Diagrams: CPM Logic Diagrams must be submitted on sheets 11 x 17 inch paper and as Adobe Acrobat PDF or as otherwise directed by the Engineer. The activity box must include at a minimum the activity number, description, responsibility code, early dates, total float, original and remaining durations. Logic Diagrams must be submitted until both the Preliminary and Baseline CPM Schedules are accepted. Upon acceptance of the Preliminary and Baseline CPM Schedules one set of the CPM Logic Diagrams must be submitted. The CPM Logic Diagrams must be resubmitted for approval when a revision to the schedule logic is made.

5. Monthly CPM Updated Schedule: No later than the third (3rd) working day of the month, the Contractor must submit an update of the CPM Schedule. This Schedule update must be derived from the Baseline CPM Schedule and includes progress of the Work as of the data date and as agreed to each month in the monthly schedule review/update meeting. Except for recording the work progress, no changes are permitted to the updated CPM Schedule including, but not limited to, Activity ID, logic, durations, budgeted quantities of both material and man-hours unless submitted, reviewed and accepted by the Engineer prior to their insertion into the updated CPM Schedule. The Contractor agrees that this Schedule update accurately represents the progress of the Work to date and balance of the Work to be completed.

6. Hard and Electronic Copies: The submittal of the Preliminary, Baseline, and Monthly CPM Schedule Updates, in detail and in summary format, must include three (3) collated paper copies on 11 x 17 and must also be submitted in Adobe Acrobat PDF and in native Primavera Project Management P6 software files (Version 15.0 or newer).

1.4 PROJECT SCHEDULER

A. The Contractor must employ or retain a project Scheduler with a minimum of five (5) years of

experience in the use of Oracle's Primavera Project Management Primavera Project Management (P6 or later) for the purpose of developing, monitoring, maintaining and updating the Contractor's detailed Project's Schedule utilizing the latest version of Primavera Project Management P6 software (Version 15.0 or higher). The Project Scheduler must also possess at least five (5) years of relevant experience in construction, planning, scheduling, expediting and tracking the progress of the work for projects of a similar nature, size, and complexity. The Project Scheduler must be responsible for adhering to all requirements of this schedule specification, attending all job progress review/update meetings, and other meetings as requested by the Engineer. The Project Scheduler must be dedicated fully to this Contract and is expected to function as part of the Contractor's project team and actively contribute to the planning, mitigation and coordinated maintenance and upkeep of the Project Schedule deliverables of this Contract.

3.1 GENERAL REQUIREMENTS

A. To enable the Work to be performed in an orderly and expeditious manner, the Work must be monitored closely by the Contractor using a CPM Schedule. The scheduling of all the Work, i.e. design, submittals, approvals, procurement, construction, testing, etc. is the responsibility of the Contractor.

B. Progress Payment: The monthly CPM Schedule update submission, showing updated activities and status in accordance with the requirements of this Section must be a condition precedent to the start of the monthly progress payment cycle. **The Engineer will not process the monthly progress payment until the CPM Schedule update submission has been received.**

C. Time is of the essence in the performance of all Work under this Contract including but not limited to providing the required Schedule information. The CPM Schedule must at all times accurately reflect the Contractor's CPM schedule of record for the Work and must be updated as required herein, in a timely manner. The CPM Schedule must be the primary tool utilized by the Contractor to accurately document the progress of the Work and to communicate its plan for the timely completion of the Work.

D. Float Suppression: Pursuant to float sharing requirements of this Article, the use of float suppression techniques such as preferential sequencing or logic, special lead/lag logic restraints, and extended activity times or durations is prohibited. Approval of any schedule by the Engineer does not preclude the Engineer's later correction of float suppression techniques or of any other deficiency.

E. If the Contractor elects to propose an Early Completion Schedule, such schedule must be subject to the acceptance of the Engineer and in compliance with any interim milestones specified in the Contract Documents. Early Completion Schedules are subject to Articles 8 and 9 of the Standard Construction Contract.

F. The Contractor must include an activity (milestone) in its schedule that represents Substantial Completion; such activity (milestone) will only be acceptable if it meets all the requirements of the Standard Construction Contract set forth in Article 14.

G. Scheduling Kickoff Meeting: Upon Notice to Proceed, the Contractor and the Engineer will hold a Scheduling Kickoff Meeting to review these requirements and any related Contract Documents. This meeting must be attended by the Contractor's Project Manager, Contractor's Project Scheduler, representatives from key subcontractors, and the Engineer's staff, including the Engineer's project scheduler. Specific items to be covered will include Contract

schedule requirements, project phasing, intermediate milestones, workday calendars, activity coding, schedule updating, schedule revisions, progress payment process, and any other items related to the project schedule document development.

3.2 DETAILED SCHEDULE REQUIREMENTS

A. Schedule Detail: The CPM Schedule must contain sufficient design, procurement, and construction activities to represent the Work, subject to the acceptance by the Engineer, with a means to monitor and follow progress of all phases of Work; comply with limits imposed by the scope of Work, with contractually specified seasonal restrictions, interim milestones and completion dates; and with constraints, restraints, or sequences included in the Contract. The schedule detail must be subject to acceptance by the Engineer. Factors to be considered include, but are not limited to:

1. Organization by major areas of Work Breakdown Structure (WBS).
2. Submittals, submittal reviews and approvals, manufacture, tests, delivery, installation activities for long lead items, training syllabus, critical materials and equipment, system testing as well as seasonal restrictions must be represented in the CPM Schedule. Description of the activity must include sufficient detail to identify the unique scope of that activity. Whenever possible, like items must be combined in a single submittal. If multiple items are included in a single submittal, that submittal must be identified in the Schedule by an activity in accordance with the following conditions:
   a. The “Review and Approval” activity for that submittal must be a condition precedent to every activity representing fabrication and delivery of any of the materials submitted.
   b. If and when the submittal receives authorization for the activity to partially proceed and that partial authorization is sufficient to enable the commencement of some, but not all, successor activities, then the original submittal activity must be broken down into multiple activities, as necessary to accurately reflect the logic of Contractor’s current plan.
3. Deliveries of furnished equipment and/or materials in accordance with dates or schedule windows of times set forth in the Contract. Activities representing the delivery of materials or equipment for more than one installation activity will be permitted in accordance with the following conditions:
   a. The delivery activity must precede each activity representing the installation of that material in each area.
   b. When partial deliveries are received and are adequate so as to enable commencement of some, but not all, successor activities, then the original delivery activity must be broken down into multiple activities, so as to accurately reflect the logic of the Contractor’s current plan.
4. The required review and approval time for any submittals must be incorporated.
5. Milestones or access restraints for completion of certain portions of the Work or access and availability to Work areas as referenced elsewhere in the Contract Documents.
6. Identification of interfaces and dependencies with preceding, concurrent, and follow-on Contractors and utilities, typically shown as milestone type of activities.
7. Planning for phased or total handover to the Engineer.
8. Identification of any resource restrictions including manpower (by trade), material, and equipment, as well as any activity requiring unusual shift work, such as multiple shifts, weekend work, specified overtime, or work at times other than regular days or hours.
9. Resource Loading: Resource allocation for each activity in the CPM Schedule identifying the man-hours by trade and costs by bid item. Cost items may be combined by category

as approved by the Engineer. Activities containing unit price items must equal the amount of the quantity specified in the Contract. The Engineer reserves the right to accept or reject any value and allocation of the man-hours and/or costs.

10. Activity Code Structures: Activities must be coded for the following categories:
    a. RESP - Responsibility – Identify Contractor Utility, Subcontractor, etc. responsible for the Work.
    b. PHAS – Phase – Breakdown of activities in Milestone, Construction Phases and Close out activities.
    c. AREA - Area – May be used as subdivision to include permits, engineering, design, procurement, submittals, submittal review and approval, fabrication, delivery, change order, training, testing & commissioning, payment item major areas of Work.
    d. LOCN – Location - Breakdown by street, intersection or block, construction reaches or landmark locations.
    e. TRAD – Trade – Breakdown by work type. Examples: ramp, plaza, sidewalk, pedestrian bridge, roadway construction.
11. Calendars: Develop activity calendars commensurate with the Contractor's workweek plan. Calendars must include all non-working Days, such as: seasonal weather conditions, weekends, holidays, or other periods when the Contractor plans not to work. Calendar(s) must be reviewed and accepted by the Engineer as part of the Baseline Contract Schedule submittal and will be monitored using the most updated Contract Schedule.
    a. The planning unit for the Contract must be Days (CCD).
    b. Calendars must contain all applicable union holidays, as listed in any applicable labor agreements.
    c. Every activity must be assigned a working day calendar that considers when the activity is planned to occur and when it is contractually permitted to occur.
12. Activities representing work or participation by the Engineer staff must be assigned to a 5-day workweek calendar, unless otherwise specified by the Engineer or Engineer's Representative. Contractor's Schedule must not anticipate or require weekend or holiday work periods for the Engineer unless specifically approved by the Engineer.

B. Materials and Equipment Procurement: Include the following activity sequence for critical and long lead materials and equipment procurement:

    1. Submittal Preparation.
    2. Review and Approval.
    3. Fabricate and Deliver.

C. Logic and Durations: Logic and activity durations must be established by the Contractor consistent with the Contract requirements and must reflect coordination between trades, definitive resource planning and on-site work conditions. Logic must show how the start of a given activity is dependent on the completion of preceding activities, and its completion restricts the start of following activities. Except for non-construction activities such as procurement of material, delivery of equipment or fabrication, activities must not have a duration greater than twenty (20) working days unless specifically approved by the Engineer. Duration for non-construction activities such as procurement of material or delivery of equipment may not exceed twenty (20) working days without prior approval.

D. Restraints and Milestones: The start date of the CPM Schedule must be the Contract NTP date. The completion date of the CPM Schedule must be the Contract Substantial Completion date as specified in this Chapter. All intermediate restraints and milestones required in the Contract

must be shown in proper logical sequence and properly constrained.

E. Schedule Dates: Whenever the term “schedule” or “scheduled date” is used, it must mean the “early start” and “early finish” dates in the CPM Schedule. The “late” dates are for purposes of calculating float and do not represent the schedule dates.

F. Activity Descriptions: Activities must be described such that the Work is readily identifiable for assessment of start and completion, as well as intermediate status. Descriptions must utilize identifiers for physical locations such as reaches, bridge locations and elevations where possible to define the Work. The activity description must identify the scope of the activity. There must not be any two activities with the same activity description.

G. Working Days: While contract times are expressed in Days (CCD), the CPM Schedule must be calculated in working days.

H. Weather or Seasonal Allowances: Seasonal weather conditions must be considered in the planning and scheduling of all Work such that all Work will be completed within the allotted Contract time. Any weather or seasonal allowance must be stated in the Baseline narrative.

I. Submittal and Review Periods: The review period shown in the Schedule for submittals must conform to the Contract requirements set forth in Article 10 of the Standard Construction Contract and the related submittal section of the Technical Specifications.

J. Constraints: The Schedule must include all Work constraints indicated in the Contract Documents. Other activity Constraints must not be used unless approved by the Engineer.

K. Float: Float is defined as the calculated amount of time that the estimated start or finish of an Activity can be delayed without impacting the start or finish of other downstream activities logically connected in a progressive relationship. Float, in any schedule, must not be for the exclusive use or benefit of either the City or the Contractor, but must be available for use by both the City and the Contractor.

L. The CPM Schedule must contain sufficient activities and allotted time for all inspections, testing, commissioning and the Engineer’s acceptance, as well as system testing, orientation, and demonstrations. The schedule must also include a System Testing and Acceptance fragnet or subnet within the project CPM Schedule as needed. This schedule will identify all equipment and systems that require testing, orientation and acceptance by the Engineer. The durations and sequences of the systems testing, orientation and acceptance must be as specified in the various sections of the Contract Specifications. Each system will contain, but will not be limited to, all of the following activities and constraints:

1. Interface between the construction activities and their respective system.
2. Contractor’s pre-testing Work.
3. Submittal and approval of the Contractor’s pre-testing data and checklist, as appropriate.
4. Sufficient notification time to the Engineer prior to system testing.
5. Submittal and approval of the preliminary and final as-built drawings.
6. Submittal and approval of the preliminary and final O&M Manuals.
7. Submittal and approval of testing procedures.
8. All other systems that are required to be tested and accepted prior to the specific system being tested.
9. System testing by the Engineer.
10. Other outside agencies, utilities, etc., that are required to test, witness and accept the system.

11. Submittal and approval of the orientation syllabus, orientation manual, and orientation video.
12. Performance of orientation.

M. Prior to Substantial Completion, the Contractor must submit a Punchlist Completion Schedule that shows the schedule of the punch-list items. All Work shown on this schedule must be performed as specified within Article 14.2.2 "Approval of Final Approved Punch List". The Engineer, in a written notification to the Contractor, must approve the Contractor anticipated completion dates. If the Engineer and the Contractor are unable to agree on the anticipated completion dates, the Engineer must establish dates for the completion of each item of work.

N. In the event that Contractor requires multiple submissions in order prepare a submittal that is acceptable to the Engineer and that can be approved, then the Contractor must adjust its CPM schedule to include adequate time for such multiple submittals at each stage of the approval process. Any additional time resulting from the Contractor's multiple submissions before an item can be approved by the Engineer must be mitigated by the Contractor.

3.3 BASELINE CPM SCHEDULE NARRATIVE

A. As a component of the Baseline CPM Schedule, submit a narrative to describe the procedures, general approach and the means and methods it will use to complete the Work under the conditions described and in accordance with Article 9 of the Standard Construction Contract.

B. Submit the narrative described herein along with the Baseline CPM Schedule. Any review, acceptance or approval of a Baseline narrative or Schedule submission cannot revise or amend any Contract provision and does not represent the Engineer's agreement to any conclusion, interpretation, indication, method or description contained therein.

C. A narrative report that must be signed by the Contractor's project manager and must describe and demonstrate that the Contractor's proposed means and methods meet the specified Contract requirements. The narrative must include but not limited to:

1. Description of the scope of Work and goals.
2. A discussion of the CPM Schedule development.
3. A listing of all intermediate contractual milestones with their respective float and schedule analysis.
4. Identification of the critical path(s).
5. Identification of the long lead items and their impact on the critical path(s).
6. Identification and description of the calendar(s) used in developing the Baseline CPM Schedule.
7. Identification of planned manpower and projections of Contractor's workforce and subcontractor's workforces; the manpower projections must also be submitted in a histogram and cumulative graph format.
8. Identification of planned equipment requirements.
9. Description of planned mobilization, including provisions for the Engineer's office and facilities.

3.4 SCHEDULE REVIEWS

A. Reviews of Contractor's Schedule submissions will be in accordance with Article 9 of the Standard Construction Contract and this Article, unless noted otherwise.

B. Preliminary CPM Schedule Review: Within 15 Days following receipt of the Preliminary CPM Schedule, the Engineer will review the Preliminary CPM Schedule and return it to the Contractor either with comments or conditionally accepted. During this time, the Contractor must participate

in the review and evaluation of the Preliminary CPM Schedule with the Engineer. Within 5 working days after comments are received, the Contractor must address the Engineer's comments and resubmit a corrected Preliminary CPM Package. The Contractor must repeat this process as many times as required at no additional cost to the City until the Engineer conditionally accepts the Preliminary CPM Schedule.

C. Baseline CPM Schedule Review: Within 20 working days from receipt of the Baseline CPM Schedule, the Engineer will review the Detailed CPM and return it to the Contractor either with comments or accepted. During this time, the Contractor must participate in the review and evaluation of the Detailed CPM Schedule by the Engineer. Within 5 working days after comments are received, the Contractor must address the Engineer's comments and resubmit for acceptance a corrected Detailed CPM package. The Contractor must repeat this process as many times as required until the Engineer accepts the Detailed CPM Schedule at no additional cost to the City.

D. Update Reviews: The Engineer will review and respond to the update scheduling submittals within 5 working days after submittal, unless a different review period is expressly identified elsewhere in the Specifications or other Contract Documents. After review, if changes or additional information are required, the Contractor must submit a revised CPM Schedule update within 3 working days after receiving the comments. Review, revision, and resubmission must continue until the Engineer's acceptance is achieved at no cost to the City as defined in Article 2 of the Standard Construction Contract.

E. Reviews and Re-submittals: The Contractor must repeat this process as many times as required at no additional cost to the City until the Engineer accepts the Preliminary Schedule, Baseline CPM Schedule, and the monthly CPM Schedule updates. Acceptance of the Preliminary Schedule is a prerequisite for the acceptance of the Baseline Schedule.

3.5 UPDATING THE PROJECT SCHEDULE

A. Updating: The Contract Schedule must be updated monthly, with Data Date as of the last day of the current month. The Engineer reserves the right to change the monthly cut-off dates in the future for its sole convenience. The Monthly Schedule Review/Update Meeting must be the prerequisite and the start of the monthly update cycle.

1. The CPM Schedule must be updated monthly, whether or not the Engineer has accepted the prior updated Schedule, to reflect actual progress. The update must include the historical record of actual start and finish dates for activities completed. For in-progress activities, the update must include percent complete based on a unit of measure and remaining duration based on the amount of work-days required to complete the activity. Enter for each applicable activity actual installed quantities.
2. Default (automatic) updating of the schedule is prohibited. Actual Start and Finish dates must not be automatically updated by default mechanisms that may be included in the CPM scheduling software systems. This Contract's primary source of actual starts and finishes and percentages complete are the quantity verification sheets (QVS), which must include the Start and Finish Dates, signed by both parties and included in each of the Contractor's payment requests.
3. The updated Current Project Schedule must be used for subsequent planning, scheduling, managing and updating the execution of Work to be accomplished. If an update evidences delay to the Baseline Schedule, one of the goals of the planning process must be mitigation of that delay, in accordance with and subject to the provisions of Articles 9 and 10 of the Standard Construction Contract.

B. Two (2) working days prior to the monthly schedule review/update meeting, the Contractor will

provide to the Engineer two (2) sets of the two weeks-look-ahead schedule or "Activity List" which will identify, at a minimum, the following information for all activities that have started, are in progress, or have been completed during the reporting period.

1. Assessment of each in-progress activity's remaining duration in P6.
2. The actual start and finish dates whenever appropriate in P6.
3. Actual quantities installed and the physical percent complete for all design and construction activities in P6.

C. Monthly Schedule Review/Update Meetings: A monthly schedule review/update meeting must be held within the last five (5) working days of the reporting month. This meeting must be attended by the Engineer, the Engineer's scheduler, the Contractor's project manager and the Contractor's Project Scheduler, and key subcontractors' representatives. The purpose of this meeting must be to obtain joint agreement on Work progress shown on the Activity List as well as to discuss schedule-related problem areas, proposed logic changes, revisions to previously established productivity rates and other schedule issues. At this meeting, all progress during the calendar month must be addressed and reviewed for incorporation into the CPM Schedule by the Contractor. These meetings must precede the formal submittal of the monthly updated CPM Schedule.

D. Subsequent to the monthly schedule review/update meeting, and pursuant to any agreements made regarding progress and the agreed-upon changes, the Contractor must update the CPM Schedule and provide all required reports showing current progress of the Work as well as a plan and schedule of the completion of the remaining Work. The CPM Schedule must be updated as of the last day of each calendar month and must be submitted no later than the fifth (5th) working days of the month following the report period, until Substantial Completion of the Project. The update must comply with the criteria and format set forth in this Specification. This progress information must be included in the computerized CPM Schedules.

E. The monthly update procedure must include a review of the submittal and delivery activities to ensure that the scope and logic of the activities are consistent with Contractor's current plan.

F. On every progress update, the Contractor must report the physical percent complete as of the status date, for all activities in progress. The physical percent complete for each activity must be established in the following manner: For activities that are quantifiable, the physical progress equals the quantity installed or erected divided by the total quantity allocated to the particular activity (including overruns and underruns). For those activities that cannot be quantified, physical percent complete must be estimated and backup calculations provided.

3.6 MONTHLY PROGRESS REPORTS

A. The Contractor must prepare definitions and designs for reports and/or layouts in Primavera Project Management, P6 V15 or newer in accordance with the requirements detailed herein. The Monthly Progress Report Package submitted to the Engineer must consist of three (3) collated copies of the following:

1. Activity Tabular Reports.
2. Resource Tabular Reports.
3. Resource/Cost Graphic Reports.
4. Bar Charts.
5. Narrative Progress Report clearly identifying progress status and restrictions encountered during the reporting period.

B. Activity <u>Tabular Reports</u> must be provided in the following sort orders:

1. Total float, then early start.
2. Grouped by responsibility, then by early start.
3. Grouped by major Work areas, then by early start.

The minimum activity information required in each of the above reports must include the following:

1. Activity ID.
2. Activity description.
3. Location code identification.
4. Work responsibility code identification.
5. Original activity duration (OD) and remaining duration (RD) in working days.
6. Early and late start and finish dates.
7. Total float.
8. Percent complete.
9. Calendar ID.

C. Updated Bar Chart: Include updated bar charts for:

1. Remaining activities.
2. Critical path(s) activities.
3. Six-week look ahead.
4. Summary bar charts.

The minimum activity information required in each of the above bar charts must include the following:

1. Activity Bar Content: The activity display must include the activities' description, activity ID, OD, RD, Calendar ID, percent complete, total float, early start and finish dates and Responsibility for each activity bar.
2. Grouping: The activities must be grouped as approved by the Engineer.
3. Critical Path Display: The critical path must be identified on the plot in such a manner that it will be clearly distinguishable from other activities.
4. Progress Display: Completion of activities must be indicated on the plot.
5. The summarized CPM Schedule must reflect the current schedule status of the project and be compared to the Baseline Schedule. The format and level of detail will be in accordance with the Contract's major areas of Work to be agreed upon with the Engineer.

D. Narrative Progress Report: The Narrative Progress Report submitted as part of the monthly update analysis must include, but not be limited to:

1. Description of the CPM Schedule status.
2. Discussion of current and anticipated delays including reason for the delay, the recovery scenario(s) and their estimated impact, including off-site activities such as submittal preparation, fabrication, and deliveries.
3. If the Work is behind schedule, include discussion of schedule slippage and/or progress along the critical path in terms of Days ahead or behind the allowable dates and discussion of progress along other paths with negative float to mitigate delays. This must also include a proposed recovery plan and action to be taken.
4. Logic changes and an explanation of the revisions. Revisions to activities not worked on during the period, including changes in duration; revisions to activity relationships; and

revisions to constraints on activities; are all to be considered logic revisions. Similarly, this must include description and explanation of reason(s) for any changes to calendars being used in Schedule as well as any changes to calendar assignments of activities.

5. Updated schedule modifications reports: A comparison report showing all changes made to the schedule since the last update as approved by the Engineer. This report must include the reasons for these changes.
6. Identification and justification of all activities performed out of sequence.
7. A summary of planned equipment utilization for the Project, identifying each type of operated equipment to be used on the Contract, the planned quantity of each type of operated equipment utilized each month, and all changes to the criteria for mobilizing and demobilizing each piece of equipment to and from the site.
8. A summary of planned labor utilization for the Contract, identifying the average and maximum number of workers on site each month. Identify actual and potential labor resource limitations. A summary of the actual labor utilization used over the past month.
9. List of identified additional out of scope items and their potential schedule impact, if any.
10. Identification of outstanding RFI's including discussion of their cost and/or schedule impact.

3.7 SCHEDULE DELAY CLAIM:

A. In addition to the requirements outline in with Article 11 "Notice of Conditions Causing delay and Documentation of damages Caused Delay" of the Standard Construction Contract and in instances where the Contractor is submitting a schedule delay claim, the claim request must include a schedule subnet, tabular reports and an explanation that clearly demonstrates the impact of the claim on the project's schedule. The schedule to be utilized as the basis for the claim must be the "Current Updated Schedule" which reflects the present status of the Project. The Contractor must provide to the Engineer, as a minimum, the following information:

1. Schedule subnets (logic diagrams) and tabular reports (prior to and after the Extra Work insertion) that clearly demonstrate the schedule impact on the entire Current Updated Schedule.
2. Schedule impact on engineering/design related activities and/or on activity man-hours.
3. Schedule impact on material and/or equipment procurement, fabrication and delivery schedules.
4. Schedule impact on material storage, temporary services (water, air, power, etc.), supervision, construction equipment, productivity, and manpower.
5. Narrative that clearly identifies, describes, and substantiates the schedule impact on both the affected and subsequent (unchanged Work) activities.
6. Corrective action that can be taken in order to avoid/minimize the schedule impact.
7. Computerized storage media containing all required schedules, cost, resource, and Narrative information.
8. Any other tabular/graphical reports required by the Engineer.

3.8 REVISION TO THE PROJECT SCHEDULE

A. In the event that the Engineer determines that there will be or has been a delay which might affect the critical path, the Engineer will instruct the Contractor to analyze the circumstances as to whether the critical path is or will be affected thereby and submit a proposed recovery plan to the Engineer.

B. In the event that it is necessary to revise the CPM's Schedule and/or phasing plan, a revised CPM Schedule and/or phasing plan must be submitted for acceptance at no additional cost to the City. Reasons for revision may include, but are not limited to, incorporation of approved

Extra Work (change orders), modification of activity man-hours, if the Engineer determines that Work is not progressing to meet the accepted CPM Schedule, when a delay is affecting the critical path(s), if the phasing plan has been changed, or if the Work is not performed as shown in the accepted CPM Schedule.

C. In all situations in which the CPM cost or CPM Schedule is revised, the Contractor must submit a narrative explaining the reasons for the changes. In addition, the Contractor must submit a listing of all proposed changes in network logic including, but not limited to changes in activity duration and logic, changes in activity man-hours and quantities, changes in activity sequence and any changes in completion dates. Revisions to the schedule document must only be made after authorization by the Engineer.

D. Upon the Engineer's direction, the proposed resource and/or schedule changes are to be added into the CPM Schedule and must be submitted to the Engineer for review and acceptance within five (5) working days.

E. After Extra Work (change orders) has been approved, the approved logic and its associated information such as activity man-hours, quantities, etc., must be incorporated into the Project Schedule. The sum of the cost and quantity of all the individual activities contained in the Extra Work must be equal to the total cost and quantity of the approved Extra Work. All activities associated with Extra Work must be coded with their specific Extra Work Number.

3.9 PROCEDURES FOR CPM UPDATES AND SCHEDULE CHANGES

A. All Monthly Progress CPM updates must be submitted using the last accepted CPM Schedule. No revisions must be made to the schedule unless they have been expressly authorized in writing by the Engineer as provided herein. Revisions that are not permitted without authorization include but are not limited to revisions in: activity duration, logic, activity man-hours, quantities, activity identification, and historical data from prior updates. Only actual dates and progress agreed upon at the progress meeting and/or progress walk through must be used in the update.

B. Any update that does not comply with these requirements will be rejected by the Engineer; and, in accordance with Paragraphs 3.1.B and 3.5.A.2, above, payment will not be processed until an update consistent with these requirements is received. The Contractor must not delay submission of an update pending authorization of review.

C. If the Contractor intends to propose revisions to the CPM Schedule, the Contractor must submit, separate from any monthly update, a list of the proposed revisions, a fragnet showing the proposed revisions in a form which clearly identifies where the fragnet is to be inserted in the schedule, and a narrative explaining the reason for these revisions. No revision to the CPM Schedule, including any update, must be made until the proposed revision is reviewed by the Engineer and written authorization from the Engineer is provided for that revision. The authorization of any revision to a previously accepted schedule is within the sole discretion of the Engineer.

The authorized revision must not be incorporated into the CPM Schedule Document until the CPM Schedule update following the date of authorization of that revision. Once incorporated, that revision must become part of the accepted schedule.

B2. SUBMITTAL PROCEDURES

The requirements of this article supplement the submittal requirements in the NYCDOT Standard Highway Specifications and the NYCDEP Standard Sewer and Water Specifications. If a conflict exists, the requirements of this article govern.

1.0 GENERAL

This article includes administrative and procedural requirements for submitting Shop Drawings, Catalogue Cuts, Material Samples, As-built or Record Drawings, and other submittals required by the Contract Documents.

Review of submittals does not relieve the Contractor of responsibility for any Contractor's errors or omissions in such submittals, nor from responsibility for complying with the requirements of the Contract.

2.0 DEFINITIONS

Program Management Information System (PMIS) – NYCDDC's System of Record for the Costal Resiliency Program.

Design Consultant - the entity responsible for providing design services for the Project, including without limitation, preparing the construction documents (drawings and specifications) and providing services in connection with such documents during construction. The entity serving as the "Design Consultant" may be a corporation, firm, partnership, joint venture, individual or combination thereof. Such entity may be either an employee(s) of the City or an entity engaged by the City to provide such services.

Submittals - written and graphic information that requires responsive actions and includes without limitation all shop drawings, product data, letters of certification, tests and other information required for quality control and as required by the Contract Documents.

Shop Drawings – includes drawings, diagrams, illustrations, schedules, performance charts, brochures, and other data, except for coordination drawings, specifically prepared for the project by the Contractor or any subcontractor, manufacturer, supplier or distributor, which illustrates how specific portions of the work must be fabricated and/or installed.

Product Data and Quality Assurance Submittals - includes manufacturer's standard catalogs, pamphlets and other printed materials including without limitation the following:

1. Catalogue and Product specifications
2. Installation instructions
3. Color charts
4. Catalog cuts
5. Rough-in diagrams and templates
6. Wiring diagrams
7. Performance curves
8. Operational range diagrams
9. Mill reports
10. Design data and calculations
11. Certification of compliance or conformance
12. Manufacturer's instructions and field reports

3.0 SUBMITTAL PROCEDURES

3.01 Document Control

The Contractor must submit for approval by the Department's engineering personnel and/or Supervising Consultant (herein after called "the Engineer") a Document Management Plan within 30 days of Notice

of Award. The Document Management Plan must define the Contractor's Electronic Document Management System (EDMS) including security protocols. The Document Management Plan must include the following:

1. Requirements for records storage and retention.
2. Procedures for the electronic data backup of all Project-related documents, on a minimum weekly basis, in a secure off-Site area in order to allow for recovery of unexpectedly lost data.
3. Procedures for data transmission, storage and sharing protocols.
4. Procedures for the maintenance, retention, retrieval, and disposal of records.
5. An auditable and tracking system of all Project correspondence and documents
6. Methods by which all documents issued and received by the Contractor will be uniquely coded and retrievable in a user-friendly format.
7. File control, and search and retrieval methods for all documents.
8. Methods to facilitate sharing of data, including procedures for accessing all documents.
9. Methods for controlling document updates.
10. Methods for identification of the originator/recipient for all documents.
11. Document approval tracking.
12. Methods for enabling a searchable database.
13. Methods to establish links among various documents.
14. Protocols for hard-copy and electronic filing.
15. Procedures for recording and tracking review comments and participation by the Engineer and the Contractors' internal review processes as well as any reviews by third-parties or stakeholders.

3.02 Project Management Information System

The Contractor must use the Project Management Information System (PMIS), provided by NYC DDC, throughout the Term of the Agreement for document management and transmittal, including workflows, file storage, communication, and correspondence. This must be in addition to the Contractor's obligation to provide the EDMS as referenced in Sub-Article 3.0.1. All submittals must be uploaded to the PMIS and adhere to the hard copy submittal requirements set forth in the General Conditions. Submittals will be deemed incomplete until the soft copy is uploaded to the Project Management Information System and the hard copies have been received by the NYC DDC. The PMIS will be accessible only through security rights and administration at the discretion of NYC DDC. NYC DDC reserves the right to make periodic changes and enhancements to this requirement with which the contractor must immediately comply.

The PMIS will not relieve the Contractor of its responsibility to independently provide redundancy and security of all Project records. Immediately upon provision by the NYC DDC of access to the PMIS and when instructed to do so by the NYC DDC, the Contractor must utilize the PMIS as the primary interface for all official communications, transmissions and records in connection with the Project between the Contractor and NYC DDC.

Additional PMIS requirements/guidelines for the Contractor:

1. The PMIS must be used to track and manage the Project and as an official record of all Project communication.
1. Designate a PMIS coordinator (an internal point of contact) and provide their name, phone, and e-mail to NYC DDC no later than seven days after NTP
2. Provide high-speed internet connectivity to access the PMIS.
3. Upload, submit, track, and review submittals and all Project related information via the PMIS. Where physical samples are required, review and track the submittal via the system, transmit the sample itself to the reviewer via traditional means and submit a scanned color copy or picture via the PMIS.
4. Enter all PMIS metadata as directed by NYC DDC
5. Use the file naming convention provided in Sub-Article 4.0 for all files uploaded to the PMIS

Refer to other General Requirements and technical specification sections for the specific submittal requirements stated in that section.

3.0.3 Submittal Coordination

The Contractor must coordinate each submittal with fabrication, purchasing, testing, delivery, other submittals, and related activities that require sequential activities.

3.0.4 Submittal Schedule

The Contractor must submit for approval by the Engineer, a Submittal Schedule within fifteen (15) days of Notice of Award. The Submittal Schedule must include and describe all project submittals. The Submittal Schedule must indicate the applicable specification section requirement, identify dates for submittal sequence, preparation and submission based on the approved project schedule and must be organized in a logical manner. The Submittals Schedule must take into consideration reasonable review times and any lead times required by fabricators or manufacturers.

In the interest of a progressive and orderly flow of work from the Contractor to the Engineer that avoids submission of an excessive number of submittals in the same period, the Submittal Schedule must not include more than two (2) submittal reviews per calendar week, unless the Engineer agrees in writing to a larger number on a case-by-case basis.

The Contractor must incorporate the following work flow and timeframes for submittal review in the Submittal Schedule:

1. Submittals received after 3PM will be deemed submitted the following working day.
2. Submittals received after 12PM on Friday will be deemed submitted on the following Monday.
3. Submittals will be deemed administratively incomplete until both the soft copy is uploaded to the PMIS and the hard copies have been received by NYC DDC

Review priorities and extension of review times must be coordinated with the times established in the approved Submittal Schedule.

3.0.5 Submittal Identification

The Contractor must place a permanent label or title block on each submittal for identification. Each submittal must include:

1. Name of firm or entity that prepared each submittal on the first page of the label or title block.
2. The following minimum information on label for processing and recording action taken:
    a. Project name, NYC DDC Project Number and Contract Number
    b. Revision date
    c. Name and address of Design Consultant
    d. Name and address of Contractor
    e. Name and address of subcontractor
    f. Name and address of supplier or manufacturer
3. Submittal number or other unique identifier, including revision identifier:
    a. Number and title of relevant Specification Section
    b. Drawing number and detail references, as appropriate
    c. Location(s) where product is to be installed, as appropriate
    d. Other necessary identification
4. A revision grid which lists all revisions of the submittal
    a. Date Submitted
    b. High-level description of change
    c. Revision number in XX format starting at 00

3.0.6 Transmittal

The Contractor must package each submittal individually and appropriately for transmittal and handling. The Contractor must transmit each submittal using a transmittal form. Transmittals received from sources other than the Contractor will be returned without review. Re-submission of the same drawings or product data must bear the original number of the prior submission, the original titles and next sequential revision number.

3.0.6.1 Transmittal Form

The Contractor must indicate the following information on the Transmittal Form:

1. Project name, NYC DDC Project number and Contract Number.
2. Date
3. Destination (To:).
4. Source (From:).
5. Unique identifier
6. Names of Contractor, subcontractor, manufacturer, and supplier.
7. Category and type of submittal.
8. Submittal purpose and description.
9. Specification Section number, unique identifier and revision number
10. Drawing number and detail references, as appropriate.
11. Transmittal number numbered consecutively.
12. Submittal and transmittal distribution record.
13. Remarks.
14. Signature of transmitter.

4.0 SUBMITTAL FORMAT

4.0.1 Shop Drawings, Product Data, and Quality Assurance Submittals

The Shop Drawings, unless otherwise directed, must be on sheets of the same size as the Contract Drawings, drawn accurately and of sufficient scale to be legible, with a one half (1/2) inch marginal space on each side and a two (2) inch marginal space for binding on the left side.

Shop Drawings and Product Data and Quality Assurance Submittals must be submitted to the PMIS as raster files in Adobe Acrobat ".pdf" format with a minimum resolution of 200 dpi. Each submittal must be readable and printable on the Department's systems with the following scanning parameters: 400 dpi resolution, autodeskewing and despeckling. Each submittal must contain a list of the submittals and the electronic format of their files. Native file versions of submittals may be requested at the discretion of NYC DDC

Responsibility of the Contractor: The approval of Shop Drawings will be general and must not relieve the Contractor of responsibility for the accuracy of such Shop Drawings, nor for the proper fitting and construction of the work, nor of the furnishing of materials or work required by the Contract and not indicated on the Shop Drawings. Approval of Shop Drawings must not be construed as approving departures from the Contract Drawings, Supplementary Drawings or Specifications.

Electronic copies of submittals uploaded to the PMIS must utilize the following standard file naming convention

Year		Four (4) digit year, i.e.: 2019
Month		Two (2) digit month, i.e.: June = 06
Day		Two (2) digit day, i.e. 28

DDC		NYC DDC
Project		Applicable project ESCR, BMCR, BPCR, RHCR
Sandy Ref.		SR = Superstorm Sandy Resilience
Specification		Applicable Specification section, i.e.: 03300
Submittal No.:		Sequential number within the specification section, i.e..: 0001
Rev		The 2-digit revision or version number i.e.: 03
Descr		Document title (short description, think Google key words, include sender/recipient acronyms if appropriate)

i.e.: 2019-06-28_DDC_ESCR_SR_03300-0001-03_Product_data_name

File naming guidelines:

Dates (Final Documents)

Dates should always be presented 'back to front', that is with the year first (always given as a four-digit number), followed by the month (always given as a two-digit number), and the day (always given as a two-digit number) such as "20190801" or 2019-08-01" for August 1st, 2019. Dates in file names are used to identify issued records and to differentiate between multiple "final" issuances of the same document.

Keep File Names Short but Meaningful

Some words add length to a file name but do not contribute towards the meaning, for example words like "the", "a", "to" and "and". Use industry-standard nomenclature or an abbreviation of same wherever possible.

No Spaces in File Names

Use an underscore "_" or a dash "- ", and words for ease in sorting. Use of caps to distinguish words for ease of reading is encouraged (e.g. DocumentManagementPlan or Document_Management_Plan). Spaces between words increase the software system naming characters and should be avoided.

Numbers in File Names

When file names include numbers, it is important to include the zero for numbers 0-9 to maintain the numeric order. This helps to retrieve the latest record number. i.e. 01, 02 … 99, unless it is a year or another number with more than two digits.

Special Characters

The use of special characters can cause problems with uploading, viewing and downloading documents over the internet. Special characters, such as: (~ " # % & * : < > ? / \ { | } @ $ ^ , ?) should not be used in filenames. Even if one's operating system allows filenames with those characters there can be issues when trying to transport files to another system.

Correspondence Files

It is recommended that the file names of correspondence include the name of the correspondent, an indication of the subject, and the date of the correspondence, e.g.: 2019-11-07_DDC_ESCR_SRM1_HNTB-DDC_Sample_Report_R02

4.0.2 Requests for Information (RFIs)

RFIs and other queries of the Design Consultant must be submitted to the PMIS using the forms specifically prepared for this purpose by the Design Consultant.

4.0.3 As-Builts

CADD record drawing (as-built) files submitted by the Contractor must be vectorized, computer-generated drawing files in the latest version of native MicroStation ".dgn" format. Each submittal must include the resource files such as Cell Libraries, Font Libraries, DGNLIB and reference files used to generate the

CADD drawing files. Record drawings must also be submitted in PDF or other raster format. Each submittal must be provided on CD-ROM or DVD+R and transmitted on the Project Management Information System. Each submittal must have a complete drawing list (drawing number and CADD file name for each drawing).

5.0 SUBMISSION OF SHOP DRAWINGS

Initial Submission: The Contractor must upload the submittal to the PMIS and provide hard copies as indicated in General Conditions for the Design Consultant's review and acceptance. The Engineer will transmit Shop Drawings to appropriate Design Consultants for review and acceptance, including Commissioning Authority/Agent as applicable. A satisfactory Shop Drawing will be stamped "No Exceptions Taken", be dated and returned to the Contractor.

Should the Shop Drawing(s) be marked "Make Corrections Noted" by the Design Consultant, the Engineer will return the Shop Drawings to the Contractor to make the necessary corrections and changes as indicated thereon.

Should the Shop Drawing(s) be "Rejected" or noted "Revise and Resubmit" by the Design Consultant, the Design Consultant will return the Shop Drawings to the Contractor with the necessary corrections and changes to be made as indicated thereon.

The Contractor must make such corrections and again submit the shop drawing to the Design Consultant. The Contractor must revise and resubmit the Shop Drawing as required by the until the Shop Drawings are stamped "No Exceptions Taken" or "Make Corrections Noted".

Commencement of Work: No work or fabrication called for by the Shop Drawings must be performed until acceptance of the said drawings by the Design Consultant. In addition to the foregoing Shop Drawing transmissions, a copy of any Shop Drawing prepared by any of the Contractor's subcontractors which Shop Drawing indicated work related to, adjacent to, impinging upon, or affecting work to be done by other subcontractors must be transmitted to the subcontractors so affected.

Variations: If the Shop Drawings show variations from the Contract requirements because of standard shop practice or other reasons, the Contractor must make specific mention of such variations in its letter

of submittal. Acceptance of the Shop Drawings will constitute acceptance of the subject matter thereof only.

6.0 SUBMISSION OF PRODUCT DATA

Except as otherwise prescribed herein, the submission, review and acceptance of Product Data and Catalogue cuts must conform to the procedures specified above.

Submissions of Product Data must include the following information, as applicable:

1. Manufacturer’s written recommendations.
2. Manufacturer's product specifications.
3. Manufacturer's installation instructions.
4. Standard color charts.
5. Manufacturer’s catalog cuts.
6. Wiring diagrams showing factory-installed wiring.
7. Printed performance curves.
8. Operational range diagrams.
9. Mill reports.
10. Standard product operation and maintenance manuals.
11. Compliance with specified referenced standards.
12. Testing by recognized testing agency.
13. Application of testing agency labels and seals.
14. Notification of coordination requirements.

The Contractor must submit Product Data before or concurrent with Samples of Materials.

7.0 SUBMISSION OF SAMPLES OF MATERIALS

Samples must be submitted in triplicate, of sufficient size to show the quality, type, range of color, finish and texture of the material.

Each of the samples must be labeled as follows:

1. Name of the Project, NYC DDC Project Number and Contract Number.
2. Name and quality of the material.
3. Date.

8.0 SUBMISSION OF PHOTOS

All electronic photographs must be uniquely identified, include the project abbreviation, identify the location depicted in the photo, date photo was taken and submitted in Joint Photographic Experts Group (JPEG) (.jpg) file format, sized at a minimum resolution of 1024 by 768 pixels. Save grayscale or color photo images that are scanned in JPEG (.jpg) file format with medium to low quality compression at a resolution of 200 dpi.

B3. SPECIAL CONDITIONS FOR MARITIME, WATERFRONT, AND FLOATING PLANTS

1.0 FLOATING PLANTS – GENERAL

1.0.1 Definition

Floating plant/vessel: used to transport personnel, work boats, floating cranes and derricks, barges, patrol boats, etc.

1.0.2 References

1. United States Army Corps of Engineers EM-385
2. OSHA 29 CFR

2.0 REQUIREMENTS

2.0.1 Floating Plant Inspection and Certification

All floating plants (i.e. regulated by the United States Coast Guard (USGC)) shall have required USCG documentation that is current before being placed in service. A copy shall be posted in a public area on board the vessel. A copy of any USCG Form 835 issued to the vessel in the preceding year shall be available to the Engineer and a copy shall be on board the vessel.

All dredges and quarter boats not subject to USCG inspection and certification or not having a current ABS classification shall be inspected in the working mode annually by a marine surveyor accredited by the National Association of Marine Surveyors (NAMS) or the Society of Accredited Marine Surveyors (SAMS) and having at least 5 years of experience in commercial marine plant and equipment.

All other plants shall be inspected before being placed in use and at least annually by the Agency required, including but not limited to the USCG for a Certificate of Inspection (COI), a marine surveyor (in the case of barges and/or vessels, certified crane inspector), professional engineer or the competent person as designated by the Contractor in writing.

The inspection shall be documented, a copy of the most recent inspection report shall be posted in a public area on board the vessel, and a copy shall be furnished to the Engineer upon request. A copy shall also be provided to the Engineer.

The inspection shall be appropriate for the intended use of the plant and shall, as a minimum, evaluate structural condition, compliance with safety requirements and compliance with NFPA 302.

Periodic inspections as defined in writing by the Contractor and tests shall assure that a safe operating condition is maintained.

Floating plants found in an unsafe condition shall be taken out of service and its use prohibited until unsafe conditions have been corrected.

2.0.2 Personnel Qualifications

Vessel Captains shall be in possession of a current, valid USCG license, which shall be posted in a public area on board the vessel, including any required and correctly endorsed documents as required by the USCG.

Crane Operators shall be licensed or certified in accordance with the requirements outlined by the NYC Department of Buildings, Cranes and Derricks

Operators of the floating plant shall be licensed and/or documented by the USCG when the plant is subject to one or more of the following criteria:

1. The vessel is inspected and certified by USCG in accordance with EP 1130-2-500, Appendix L;
2. The vessel is normally engaged in or near a channel or fairway in operations that restrict or affect navigation of other vessels and is required by law to be equipped with radio-telephones of the 156-162 band frequency; or
3. Floating plant is engaged in the transfer of oil or hazardous material in bulk.
4. A USCG Radar Observers endorsement on licenses is required for Operators of Uninspected Towing Vessels and Masters and Pilots on radar-equipped vessels 26 ft (7.9 m) or more in length. Endorsements must be issued from a USCG-approved training facility.

2.0.3 Record Keeping

All records for drills, inspections, maintenance and other legal requirements shall be maintained on site by the Contractor with copies provided on a weekly basis to the Engineer.

All records shall be reviewed and signed by the competent person, as designated in the Contractor's health and safety plan, and by the Contractor's Healt hand Safety Manager.

All legal inspections required by the USCG and other Agencies shall be conspicuously displayed on the floating equipment.

2.0.4 Severe Weather Precautions

Since floating plant, boats or other marine activities may be endangered by severe weather (including sudden and locally severe weather, storms, high winds, hurricanes, and floods), plans shall be made for removing or securing plant and evacuation of personnel in emergencies. > See Section 01.E. This plan shall be part of the Contractor's Health and safety plan and shall include at least the following:

1. A description of the types of severe weather hazards the plant may potentially be exposed to and the steps that will be taken to guard against the hazards;
2. The time frame for implementing the plan (using as a reference the number of hours remaining for the storm to reach the work site if it continues at the predicted speed and direction), including the estimated time to move the plant to safe harbor after movement is started;
3. The name and location of the safe location(s);
    a. The name of the vessel(s), type, capacity, speed, and availability that will be used to move any non-self-propelled plant;
    b. River/tide gage readings at which floating plant must be moved away from dams, river structures, etc., to safe areas;
    c. Method for securing equipment if not moved.
    d. Extended movement of floating plant and tows shall be preceded by an evaluation of weather reports and conditions by a responsible person to ascertain that safe movement of the plant and tow can be accomplished.
    e. Work or task orders shall be preceded by an evaluation of weather reports and conditions by the Contractor's Director of Safety on site to ascertain that safe working conditions exist and safe refuge of personnel is assured.
    f. USCG approved personal flotation devices (PFDs) - Types I, II, III, or V - shall be worn by all personnel on decks exposed to severe weather, regardless of other safety devices used. USCG-approved Type V automatic inflatable PFDs rated for commercial use may be worn by workers on USACE sites per Section 05.J.02.
    g. A sufficient number of vessels of adequate size and horsepower, each designed, outfitted, and equipped for towing service, shall be available at all times to move both

self- and non-self-propelled plant against tides, current, and winds during severe weather conditions.

h. Contractors working in an exposed marine location shall monitor the National Oceanic and Atmospheric Administration (NOAA) marine weather broadcasts and use other commercial weather forecasting services as may be available.
i. The floating plant shall be capable of withstanding whatever sea conditions may be experienced in the work area during the time period the work is being performed (i.e., seaworthiness, or good “sea keeping” qualities).

2.0.5 Emergency Planning

1. On any inspected vessel, all emergency planning is to be provided in accordance with USCG requirements.
2. Plans shall be prepared for response to marine emergencies such as fire, sinking, flooding, severe weather, man overboard, hazardous material incidents, etc.
3. A station bill, setting forth the special duties and the duty station of each crewmember for various emergencies, shall be prepared and posted in conspicuous locations throughout the vessel.
4. Each crewmember shall be given a written description of, and shall become familiar with, their emergency duties and shall become familiar with the vessel's emergency signals.
5. "Abandon ship/boat" and "person overboard" procedures shall include instructions for mustering personnel.
6. On all floating plant that have a regular crew or on which people are quartered, the following drills shall be held at least monthly during each shift (unless the vessel is required, under USCG regulations, to be drilled more frequently): abandon ship/boat drills, fire drills, and person overboard or rescue drills.
    a. The first set of drills shall be conducted within 24 hours of the vessel's occupancy or commencement of work.
    b. Where crews are employed or quartered at night, every fourth set of drills shall be at night; the first set of night drills shall be conducted within the first 2 weeks of the vessel's occupancy.
    c. Drills shall include, where appropriate, how to handle a pump shell or pipe rupture or failure within the hull (proper shutdown procedures, system containment, etc.) and how to handle leaks or failures of the hull or portions of it (what compartments to secure, how to handle power losses, pulling spuds to move to shallow water, etc.).
    d. Person overboard or rescue drills shall be held at least monthly at boat yards, locks, dams, and other locations where marine rescue equipment is required.
    e. Emergency lighting and power systems shall be operated and inspected at least monthly to ensure proper operation.
    f. Storage batteries for emergency lighting and power systems shall be tested at least once every 2 months.

2.0.6 Equipment Requirements

1. All equipment shall be maintained in accordance with manufacturers recommendations and requirements, as well as the requirements of any Agency providing certifications and inspections (such as the USCG COI or Crane Inspections) for equipment, the floating plant and/or vessels.
2. Fenders shall be provided to prevent damage and sparking and to provide safe areas for workers exposed to pinching situations caused by floating equipment.
3. Axes or other emergency cutting equipment shall be sharp and provided in accessible positions on all towing vessels for use such as freeing lines. On other floating plant (i.e., work barges, and floating cranes) emergency cutting equipment shall be provided in accessible positions.

4. Signal devices shall be provided on all vessels to give signals required by the navigation rules applicable to the waters on which the vessel is operated.
5. All controls requiring operation in cases of emergency (i.e., boiler stops, safety valves, power switches, fuel valves, alarms, and fire extinguishing systems) shall be located so that they are protected against accidental operation but are readily accessible in an emergency.
6. Electric lights used on or around gasoline and oil barges or other marine locations where a fire or explosion hazard exists shall be explosion-proof or approved as intrinsically safe.
7. General alarm systems shall be installed and maintained on all floating plant where it is possible for either a passenger or crewman to be out of sight or hearing from any other person.
8. Where general alarm systems are used they shall be operated from the primary electrical system with standby batteries on trickle charge that will automatically furnish the required energy during an electrical-system failure.
9. A sufficient number of signaling devices shall be placed on each deck so that they can be distinctly heard/seen above the normal background noise at any point on the deck.
10. All signaling devices shall be so interconnected that actuation can occur from at least one strategic point on each deck.
11. For floating plant with internal combustion engines, marine quality listed CO monitors shall be installed and maintained in all enclosed occupied spaces (crew quarters, pilot houses, etc.).
12. All doors shall be capable of being opened from either side and provided with positive means to secure them in both the open and closed position.
13. Escape hatches and emergency exits shall be marked on both sides with letters, at least 1 in (2.5 cm) high, stating "EMERGENCY EXIT - KEEP CLEAR."
14. Each prime mover (engine, turbine, motor) driving a deck winch shall be capable of being stopped by controls remote from the prime mover locations.
15. Shore power receptacles shall have a grounding conductor to prevent potential difference between the shore and the vessel.
16. All 120-, 208-, and 240-volt shall be grounded and fitted with Ground Fault Circuit Interrupter (GFCI) protection.
17. Cord connected equipment used in any of the above areas shall be connected to an outlet with GFCI protection.
18. Ground-fault protected receptacles shall be conspicuously marked “GFCI PROTECTED”.
19. Where appropriate, vessels should have watertight compartments readily identified and properly maintained in a watertight condition (i.e., sealable doors in place and fully functional). Penetrations shall be maintained in a watertight condition.
20. All reciprocating, rotating and moving parts of winch gears and other equipment shall be properly guarded.

2.0.7 Fuel Systems and Fuel Transfers

1. The provisions of the Oil Pollution Act of 1990, as amended, shall apply to floating plant operations as applicable
2. Gauge glasses or try cocks shall not be installed on fuel tanks or lines unless they meet the requirements of 46 CFR 58.50-10.
3. A shutoff valve shall be installed at the fuel tank connection: arrangement shall be made for operating this valve from outside the compartment in which the tank is located and from outside the engine compartment and outside the house bulkheads at or above the weather deck of the vessel.
4. A shutoff valve shall be installed at the engine end of the fuel line unless the length of the supply pipe is 6 ft (1.8 m) or less.
5. All carburetors on gasoline engines shall be equipped with a backfire trap or flame arrestor.
6. All carburetors, except down-draft type, shall be provided with a drip pan, with flame screen, that is continuously emptied by suction from the intake manifold or by a waste tank.

7. Fuel and lubricant containers and tanks shall be diked, curbed or controlled by other means complying with USCG requirements to contain the tank contents in case of leakage in accordance with 46 CFR 98.30-15, and 33 CFR 155.320.
8. Fuel oil transfers for floating plant shall be in accordance with the provisions of USCG regulations, 33 CFR 155, and/or 33 CFR 156. For uninspected vessels, USCG regulations in 33 CFR 156.120 and 33 CFR 155.320 for fuel coupling devices and fuel oil discharge containment apply.
9. All decks, overheads, and bulkheads, serving as fuel oil tank boundaries shall indicate the tank boundary with contrasting paint and be labeled “FUEL OIL TANK - NO HOT WORK”.

2.0.8 Safe Practices

1. The Contractor shall incorporate all safe practices into their Health and Safety plan to include training and inspection by the designated competent persons.
2. Obstructing cables/lines that cross waterways between floating plant or between plant and mooring shall be clearly marked.
3. Provisions shall be made to prevent accumulation of fuel and grease on floors and decks and in bilges.
4. Swimming and/or diving shall be prohibited for all personnel, except certified divers in the performance of their duties, unless necessary to prevent injury or loss of life.
5. Wading is permitted only when there are no severe underwater hazards such as sudden drop-offs, heavy surf above 3 ft (1 m), dangerous aquatic life, etc. Personnel wading shall wear an approved PFD and shall be monitored by personnel who are nearby and equipped to conduct a rescue if needed. Wading shall be discontinued when the person’s feet cannot easily touch bottom, regardless of depth.
6. A person in the water shall be considered as a person overboard and appropriate action shall be taken.
7. When barriers or blanks are installed in piping systems as a lock-out procedure, positive means (such as protruding handles) shall be used to easily recognize their presence. Barriers shall be marked (including name of installer, name of inspector, and date of installation) and accounted for prior to installation and subsequent to removal.
8. Deck loading will be limited to safe capacity. Loads will be secured and holdbacks or rings will be provided to secure loose equipment during rough weather.
9. Safeguards such as barriers, curbs, or other structures shall be provided to prevent front-end loaders, bulldozers, trucks, backhoes, track hoes, and similar operating equipment on floating equipment from falling into the water. Whenever this equipment is operating on deck, deck surfaces of floating plant shall remain above water and the entire bottom area of a floating plant shall remain submerged.
10. Projection and tripping hazards shall be removed, identified with warning signs, or distinctly marked with safety yellow.
11. Deck cargo carried on fuel barges shall be placed on dunnage.
12. When two or more pieces of floating plant are being used as one unit, they shall be securely fastened together to prevent openings between them or the openings shall be covered or guarded.
13. When three or more floating plant are configured for stationary work, a competent person shall identify any openings between decks of stationary vessels or vessels and other structures that create fully enclosed water areas (duck ponds) into which personnel can fall. If such openings are detected, means shall be taken to protect personnel from the hazard.
14. When physical barriers are not practical, ladders and life rings shall be installed in each enclosed water area to allow personnel to self-rescue. Ladders may be a rigid type or Jacob’s ladder, and must be securely anchored to the vessel or structure. Life rings shall have a sufficient length of rope to allow them to float on the water surface and the rope shall be

securely anchored to the vessel. The number and placement of ladders and life rings shall be sufficient so that the maximum swimming distance to them is no more than 25 ft (7.9 m). Ladders and life rings may be retracted during reconfiguration or movement of plant.

15. Anchor points shall be clearly identified and shall be inspected prior to applying a load or putting cables under tension. Anchor points not structurally sound shall be cut out, removed, and/or welded over to preclude usage. Visual checks and "all clear" warnings shall be made prior to tensioning cables.
16. Provisions shall be made to protect persons being transported by water from the elements
17. Plant fleeting areas will be designated in which all idle plant shall be moored. Such areas shall have warning buoys, signs, and lights in prominent locations.
18. The Contractor or, for Government-conducted operations, the Engineer, shall provide information to the local USCG Office identifying the marine activity and hazards.
19. Open or pelican hooks may be used for lifting anchor buoys.
20. Mechanical means such as securing pins shall be used to hold spuds safely in place before transiting from one site to another
21. When there is a potential for marine activities to interfere with or damage utilities or other structures, including those underwater, a survey shall be conducted to identify the utilities or structures in the work area, analyze the potential for interference or damage, and recommend steps to be taken to prevent the interference or damage.

2.0.9 Ventilation

1. In all circumstances and configurations, all ventilation requirements on floating plants and vessels must meet all applicable codes and requirements.
2. Motor vessels or boats powered by internal combustion engines having electric spark ignition systems or having auxiliary engines of this type in cabins, compartments, or confined spaces shall be equipped with an exhaust fan(s) for ventilating engine space and bilges.
3. At least two ventilators fitted with fans capable of ventilating each machinery space and fuel tank compartment, including bilges, shall be provided to remove any flammable or explosive gases, except those vessels constructed with the greater portions of the bilges open or exposed to the natural atmosphere at all times. Note: this requirement does not apply to diesel engines.
4. Other compartment spaces within a vessel, not covered in this Section, may be naturally vented.
5. For launches and motorboats having diesel power plants not equipped with fans, ventilating shall be by natural draft through permanently open inlet and outlet ducts extending into the bilges. Inlet and exhaust ducts shall be equipped with cowls or exhaust heads.
6. For launches, motorboats (survey boats), and skiffs having deck-mounted internal combustion engines (such as generators, jigger pumps) and not equipped with fans, exhaust piping shall be located away from personnel spaces to minimize CO infiltration in the work space
7. Vent and ventilator requirements.
    a. Fans shall be rated for Class I hazardous locations and located as remotely from potential explosive areas as practical. > See Section 11.H.
    b. The vent intake shall extend to within 1 ft (0.3 m) of the bottom of the compartment
    c. Means shall be provided for stopping fans in ventilation systems serving machinery components and for closing doorways, ventilators, chases, and annular spaces around tunnels and other openings from outside these spaces in case of fire.
    d. Engines shall not be started until the engine space and bilges have been ventilated to remove fuel vapor.

2.0.10 Navigation

The most current, pertinent information published by the USCG regarding aids to navigation shall be maintained aboard self-propelled vessels 26 ft (7.9 m) or more in length.

2.0.11 Access

2.0.11.1 General

1. Means of access shall be properly secured, guarded, and maintained free of slipping and tripping hazards.
2. Non-slip surfaces shall be provided on working decks, stair treads, ship ladders, platforms, catwalks, and walkways, particularly on the weather side of doorways opening on deck.
3. Double rung or flat tread type Jacob's ladders shall be used only when no safer form of access is practical. When in use, they shall hang without slack and be properly secured.
4. Vertical ladders shall comply with ASTM F1166-95a.
5. Ladders shall not be climbed by more than one person at a time between the same set of rails.

2.0.11.2 Access To/From Vessels

Safe means for boarding or leaving a floating plant shall be provided and guarded to prevent persons from falling or slipping thereon. Walking on rip-rap should be avoided where practical.

A stairway, ladder, ramp, gangway, personnel hoist or other safe means of access shall be provided at personnel points of access with breaks of 19 in (48.2 cm) or more in elevation.

Ramps for access of equipment and vehicles to or between vessels shall be of adequate strength, be provided with sideboards, and be well maintained.

Gangways and ramps shall be:

1. Secured at one end by at least one point on each side with lines or chains to prevent overturning;
2. Supported at the other end in such a manner to carry them and their normal load during use in the event they slide off their supports;
3. Placed at an angle no greater than that recommended by the manufacturer; and
4. Provided with a standard guardrail (toe boards are optional depending on their usefulness and the hazard involved).

2.0.11.3 Access on Vessels.

Vertical access shall be provided between various decks by means of stairs, ramps, or vertical ladders installed in accordance with ASTM F1166.

Employees shall not be permitted to pass fore and aft, over, or around deck loads unless there is a safe passage.

If cargo or materials are stored on deck of barges, scows, floats, etc., the outboard edge shall not be used as a passageway unless at least 2 ft (0.6 m) of clearance is maintained.

Vessel loads shall be limited so that access and passageways in use will remain above the waterline. Decks and passageways shall not be used for access if submerged or subject to constant breaking waves, except in an emergency.

2.0.11.4 Emergency Access

Vessels, except those easily boarded from the water, shall be equipped with:

1. At least one portable or permanent ladder of sufficient length to allow a person to self-rescue by boarding the ladder from the water, and
2. Other methods or means designed to assist in the rescue of an incapacitated person overboard.
3. Two means of escape shall be provided for normal work, assembly, sleeping, and messing areas on floating plants.

4. Means of access shall be maintained as safe and functional.

2.0.12 Marine Fall Protection Systems

On decks or work surfaces 6 ft (1.8 m) or more above the main deck or 6 ft or more above adjacent vessel decks, docks, or other hard surfaces, Railing Type A or Type B, as described in Section 19.E., or bulwarks, coamings, or other structures meeting the height and strength requirements of these railing systems shall be provided except as excluded in Sections 19.C.03 and 19.C.04.

Deck edge toe boards not less than 3.5 in (8.8 cm) high for Type A and 2 in (5 cm) high for Type B railings shall be provided when the railings are used for fall protection. Toe boards shall meet the strength requirements in Section 21.F.01.f. Scuppers and/ or drainage holes may be installed as needed as long as the top edge of the toeboard is intact and the strength requirements are retained.

Personal fall protection systems meeting the requirements of Section 21.I may be used when railing systems are not installed.

Railing systems and personal fall protection systems are not considered feasible on the main deck of vessels that perform duty cycle material loading and unloading operations from barges, scows or other vessels alongside.

2.0.13 Main Deck Perimeter Protection

Main deck perimeter protection systems are intended to provide protection against falling overboard. Main deck perimeter protection is required on all manned vessels, except where excluded in Section 19.D.05. Unmanned vessels do not require perimeter protection, however, fall protection shall be provided where the vessel configuration and operation exposes personnel to falls onto a hard surface from vertical distances greater than 6 ft (1.8 m). The design parameters for the different types of main deck railing systems listed in this Section are in Section 19.E unless otherwise noted.

Manned vessels are vessels that operate with crews, or quartered personnel, or that have work areas that are occupied by assigned personnel during normal work activities.

Unmanned vessels are typically those that carry cargo such as materials, supplies, equipment, or liquids, and do not have personnel on board except during loading and unloading and during short term operations such as tie-down, inspections, etc.

Manned vessels over 26 ft (7.9 m) in length operating in unprotected or partially protected waters (as defined in 46 CFR) shall have Type B Railings provided around the deck edge, except where excluded in Section 19.D.05.

Manned vessels over 26 ft (7.9 m) in length operating in rivers or protected waters shall have Type B or Type C Railings provided around the deck edge, except where excluded in Section 19.D.05.

Type D Grab rails shall be provided on all manned vessels in the following instances:

1. On deckhouses or other similar permanent structures more than 48 in (1.2 m) from deck edge rail systems
2. On deck houses or similar permanent structures that are within 8 ft (2.5 m) of the deck edge in areas where the deck edge rail has been omitted or may be temporarily removed in accordance with Section 19.D.05.

The following are main deck areas where perimeter protection may be omitted or temporarily removed:

1. Deck perimeter rails may be omitted from deck work areas specifically intended for line handling, working over the side of the vessel, load handling operations and designated boarding areas. Railings in these areas may obstruct work or access and present additional hazards such as pinch points against railings. Such deck edge areas may include those for line handling,

fleeting scows, mooring vessels, towing, pile driving activities, and handling or placing of construction materials and equipment pipelines, and anchors.

2. Deck Perimeter rails may be omitted from main deck areas where the overall walkway width is less than 2 ft (0.6 m) between deck structures/permanent equipment and the deck edge.
3. Removable perimeter rail sections may be installed in areas where activities such as working over the side of the vessel or loading operations are not normally performed. These rails shall be maintained in place when vessel operations do not include activity in these areas or during periods of tie-up or inactivity.

When deck-edge perimeter protection is not present, standard operating procedures in the Health and Safety Plan in accordance with USCG and OSHA requirements or other documents shall be developed to address the hazards involved. These documents shall be reviewed by all crew during initial orientation and at regular intervals afterward. The following operational procedures shall be followed:

1. PFD's must be worn by personnel in areas where deck perimeter protection is not present. Such areas may be used by crew to transit or access areas of the boat, but when doing so, all other requirements of this Section must be met. Areas where railings are removed shall be blocked off from access by a suitable barrier, or shall be clearly marked as PFD- required areas by signage, deck markings, or other means;
2. Continuous sight and verbal/radio contact shall be maintained between personnel in the non-protected deck perimeter areas and the vessel operator or a designated crew member who is in sight and verbal/radio contact with the operator, and who will monitor the workers in the area;
3. A safety skiff or equivalent rescue vessel shall be readily available throughout the duration of these activities in accordance with Section 05.K.

Boats with length 26 ft (7.9 m) or less shall be provided with integrated combinations of two or more of the below listed items to provide continuous perimeter protection around the vessel: Cockpits; Coamings; Handholds; Toe Rails; Life Rails; Deck Rails; Stern Rails and Bow Rails. The installations shall be in accordance with either ABYC Standards or ISO Standard 15085, as demonstrated by a manufacturer's certificate, label or other documentation.

Marine Railing Types.

Allowable types of railings on vessels (A, B, C, & D) are identified below. Specific requirements for the vessel types and areas where each may be used are delineated in Sections 19.G and 19.H. > See Appendix F.

Railing Type A: Two-Tier Rigid Fall Protection Rail. This railing is comprised of rigid vertical stanchions and two rigid horizontal tiers in accordance with Section 21.F.01. Minimum top rail height is 42 in +/- 3 in (106.6 cm +/- 7.6 cm) and the lower horizontal tier is at half height.

Railing Type B: Three-Tier Marine Rigid or Tensioned Railing. This railing is comprised of rigid vertical stanchions and three rigid or tensioned horizontal tiers. The following parameters apply:

1. Clear spacing between tiers shall be no greater than 9 in (22.8 cm), 15 in (38 cm) and 15-in respectively. The 9-in space is closest to the deck surface. Minimum height from deck to the top tier may not be less than 39 in (99 cm).
2. The 9-in, 15-in and 15-in tier spacing above may not be exceeded.
3. The bottom tier may be omitted in way of deck fittings or in order to facilitate line handling. The space resulting from the removed lower tier may not extend more than 2 ft (0.6 m) beyond either side of the deck fitting.
4. Vertical stanchions may be pipe or structural sections. Horizontal tiers may be constructed from rigid (pipe or structural sections) or non-rigid (wire rope or chain) components, or from

combinations of these components. Non-rigid tiers must be tensioned with turnbuckles or similar components.

5. Railings may be either fixed or removable in sections. All vertical stanchions must be adequate to withstand a 200 lbs (60.9 kg) load applied horizontally at the top of the stanchion. Stanchion spacing may not exceed 8 ft (2.4 m).
6. Pipe or structural section rail components shall be sized appropriately to meet NYCDOB Code.
7. Chain or wire rope together with all connecting fittings shall have minimum breaking strength of 4,000 lbs (1814.3 kg).

Chain or wire rope horizontal tiers shall be tensioned so that:

1. There is no slack;
2. Sag does not exceed 1/4 in (.62 cm) at any point between stanchions, and
3. The lowest point from deck to the top of the upper rail may not be less than 39 in (1 at any point between the stanchions. Tensioned railing tiers shall not deflect more than 1 in (2.5 cm) under a load of 200 lbs (60.9 kg).

Solid bulwarks or coamings providing equal perimeter protection to a height of 39 in (1 m) may also be provided. Bulwarks may be constructed of structural plate and shapes. Bulwarks must meet all strength/deflection/open spacing requirements presented above for railings.

Railing Type C: Non-Tensioned Railings and Flexible or Swing-Away Railings shall consist of rigid vertical stanchions with horizontal non-tensioned chain, wire rope or rigid tiers that clip to the verticals.

Non-Tensioned Railings shall consist of horizontal tiers constructed from chain, wire rope, pipe or structural sections or combinations of these components. Vertical stanchions shall be pipe or structural sections. Vertical support spacing shall not exceed 8 ft (2.4 m).

Flexible or Swing-Away Rails shall consist of chain or wire rope tensioned vertical support lines with non-tensioned chain, wire rope or clip-on rigid horizontal tiers. Vertical support line spacing shall not exceed 6 ft (1.8 m).

Pipe or structural section rail components shall be sized appropriately to meet the performance criteria of NY Chain or wire rope together with all connecting fittings shall have minimum breaking strength of 4,000 lbs (1800 kg).

For Non-Tensioned Railings and Flexible or Swing-Away Railings, sag of horizontal tiers shall not exceed 3 in (10 cm) between vertical supports.

Non-Tensioned Railings and Flexible or Swing-Away Railings shall be configured with four or more horizontal tiers. The number of horizontal tiers shall be sufficient to meet the following requirements:

1. Effective clear spacing between the deck and bottom tier shall be no greater than 9 in (22.8 cm).
2. Effective clear spacing between all tiers above the bottom tier shall be no greater than 15 in (38.1 cm).
3. Effective minimum height from deck to the top tier may not be less than 39 in (1 m).
4. The effective tier spacing identified above includes the effect of the increased spacing associated with sag in the tiers, applied either up or down. Clear spacing measurements shall be made with the railing tiers spread to form the largest opening.
5. Railing height is reduced by the amount of sag in the tiers. Railing minimum height shall be measured at the lowest point in the rail.
6. The bottom tier may be omitted in way of deck fittings or in order to facilitate line handling. The space caused by the removed lower tier may not extend more than 2 ft (0.6 beyond either side of the deck fitting.

7. The top tier may not deflect to a height less than 39 in (1 m) above the deck under a force of 200 lbs (60.9 kg), applied vertically. In addition, the top tier may not deflect more than 12 in (30.4 cm) horizontally under a force of 200 lbs applied horizontally.

Tensioning springs in the vertical support lines, if provided, must be of the compression with drawbar type.

2.0.14 Launches, Motorboats and Skiffs

Crew requirements

In the following circumstances a qualified employee shall be assigned to assist with deck duties:

1. When extended trips including overnight trips are made from the work site;
2. When conditions of navigation make it hazardous for an operator to leave the wheel while underway;
3. When operations being performed, other than tying-in, require the handling of lines;
4. When operating at night or during inclement weather;
5. When towing; or
6. While a vessel is transporting crew or passengers.

A qualified employee is any individual who has established, to the satisfaction of the operator of the vessel that he/she is physically and mentally capable of adequately performing the deck duties to which he/she may be assigned.

Personnel and cargo requirements

1. The maximum number of personnel and weight that can safely be transported shall be posted on all launches, motorboats, and skiffs. The number of personnel (including crew) shall not exceed the number of PFDs aboard.
2. Each boat shall have sufficient room, freeboard, and stability to safely carry the cargo and number of persons allowed with consideration given to the weather and water conditions in which it will be operated.
3. Launches, motorboats and skiffs less than 20 ft (6 m) in length shall meet 33 CFR 183 requiring level floatation after flooding or swamping.
4. All open cabin launches or motorboats shall be equipped with “kill (dead man) switches”.

Float Plans

Float plans shall be prepared by the operator of a launch or motorboat when engaged in surveying, patrolling, or inspection activities that are remote and are expected to take longer than 4 hours or when the operator is traveling alone. The plan shall be filed with the boat operator’s supervisor and shall contain the following, as a minimum:

1. Vessel information (make/model or local identifier);
2. Personnel on-board;
3. Activity to be performed;
4. Expected time of departure, route, and time of return;
5. Means of communication (adequate means of communication shall be provided).

All motorboat operators shall complete and document the following training:

1. A boating safety course meeting the criteria of the USCG Auxiliary, National Association of Safe Boating Law Administrators (NASBLA), or equivalent;
2. Motorboat handling training, based on the type of boats they will operate, provided by qualified instructors (in-house or other). Operators must pass a written and operational test;
3. Current USCG licensed personnel are exempt from the boating safety training, but they shall complete the written exam and operational test;

2.0.15 Scows and Barges

Scows dumping in open ocean waters should be equipped with remote opening devices to preclude the transfer of personnel between the vessels.

A safe means for transferring personnel between the towing vessels and scow shall be provided in accordance with Section 19.B.02.

The Contractor shall identify general and site-specific adverse weather and sea conditions (e.g., currents) under which the towing of scows or cargo barges is prohibited.

All barges and scows that are used as deck cargo barges shall comply with 46 CFR 174.010 through 174.020 for intact stability of deck cargo barges.

Personal fall protection devices or other fall protection as listed hereinC shall be used on all scows and open barges to prevent personnel transiting between the stern and bow of the vessel from falling into the hopper or falling off the side of the vessel to structures (e.g. dock, vessels) located 6 ft (1.8 m) or more below.

2.0.15 Personal Flotation Devices

Inherently buoyant Type III, Type V work vests, or better USCG-approved personal flotation devices (PFDs) shall be provided and properly worn in closed fashion (zipped, tied, latched, etc.) by all persons in the following circumstances:

1. On floating pipelines, pontoons, rafts, or stages;
2. On structures or equipment extending over or next to water except where guardrails, personal fall protection system, or safety nets are provided for employees;
3. Working at night, where there are drowning hazards i.e. working over or within 5 ft of the water, regardless of other safeguards provided;
4. In skiffs, small boats, or launches, unless in an enclosed cabin or cockpit; or
5. Whenever there is a drowning hazard.

Automatic-Inflatable PFDs Type V or better, USCG-approved for Commercial Use, may be worn by workers in lieu of inherently buoyant PFDs (see conditions 05.J.01.a-eabove), provided the following criteria is met:

1. PFDs are worn only by workers over 16 years of age and those who weigh 90 lb(40.8 kg) or more;
2. An AHA shall be developed for the intended activity and shall be used to select the most appropriate PFD for the activity;
3. PFDs used in heavy construction or maintenance activities or where hot work (welding, brazing, cutting, soldering, etc.) is to be performed must be designed, tested and certified by the manufacturers for this type of work;
4. PFDs shall provide a 30-pound minimum buoyancy, post-deployment, and shall have status indicator window;
5. Personnel shall be trained in the use, maintenance, restrictions, care, storage, inspection and post-deployment procedures per manufacturer’s instructions
6. The USCG-approval for auto-inflatable PFD’s is contingent upon the PFD being worn, not stowed. All auto-inflatable PFDs must be worn at all times a drowning hazard exists
7. In-water testing is required for all first time users so that wearers become familiar with the feel and performance of the PFD.
8. All wearable PFDs shall be of an international orange (or orange/red) or ANSI 107yellow-green color.

9. Each inherently buoyant PFD shall have at least 31 in2 (200 cm of retroreflective material attached to its front side and at least 31 in2 (200 cm2on its back side, per USCG b. Each auto-inflatable PFD shall have at least 31 in2 (200 cm2
10. Each PFD shall be equipped with a USCG-approved automatically activated light. Lights are not required for PFDs on projects performed exclusively during daylight hours.
11. Before and after each use, the PFD shall be inspected for defects that would alter its strength or buoyancy.

Throwable devices (Type IV PFD).

1. On USCG-inspected vessels, ring buoys are required to have automatic floating electric water lights (46 CFR 160).
2. On all other floating plant and shore installations, lights on life rings are required only in locations where adequate general lighting (e.g., floodlights, light stanchions) is not provided. For these plant and installations, at least one life ring, and every third one thereafter, shall have an automatic floating electric water light attached.
    a. All PFDs shall be equipped with retroreflective tape in accordance with USCG requirements.
    b. Life rings (rope attachment not required) and ring buoys (rope attachment required)shall be USCG-approved; shall have at least 90 ft (27.4 m) of 3/8 in (0.9 cm) of attached solid braid polypropylene, or equivalent. Throw bags may be used in addition to life rings or ring buoys. These throwable devices and lifelines shall be inspected at a minimum, every 6 months and shall be stored in such a manner as to allow immediate deployment and will be protected from degradation from weather and sunlight. Life rings or ring buoys shall be readily available and shall be provided at the following places:
3. (1) At least one not less than 20 in (51 cm) on each safety skiff up to 26 ft (7.9 m) in length (46 CFR 117.70);
4. (2) At least one (1) 24 in (61 cm) in diameter on all motor boats longer than 26 ft (7.9m) in length up to 65 ft (19.8 m) in length and for motor boats 65 ft (19.8 m) in length or longer, a minimum 3 life buoys of not less than 24 in (61 cm) and one additional for each increase in length of 100 ft (30.4 m) or fraction thereof; and
5. (3) At least one (1) at intervals of not more than 200 ft (60.9 m) on pipelines, walkways, wharves, piers, bulkheads, lock walls, scaffolds, platforms, and similar structures extending over or immediately next to water, unless the fall distance to the water is more than 45 ft (13.7 m), in which case a life ring shall be used. (The length of line for life rings at these locations shall be evaluated, but the length may not be less than 90 ft (27.4 m).

2.0.16 Lifesaving and Safety Skiffs

During construction activities, at least one skiff shall be immediately available at locations where employees work over or immediately next to water. Note: This requirement is applicable to any Operations and Maintenance activities that cause an employee to work outside the designed, permanently installed safety controls(i.e., guardrails).

Personnel trained in launching and operating the skiff shall be readily available during working hours. Lifesaving personnel shall perform a lifesaving drill, including the launching and recovery of the skiff, before the initiation of work at the site and monthly thereafter. All records of drills shall be maintained on site and a copy provided to the Engineer.

Skiffs shall be kept afloat or ready for instant launching.

Required equipment must be onboard and meet or exceed USCG requirements. Skiffs shall be equipped as follows:

1. Four (4) oars (two (2) if the skiff is motor powered);

2. Oarlocks attached to gunwales or the oars;
3. One (1) ball-pointed boat hook;
4. One (1) ring buoy with 90 ft (21.3 m) of 3/8 in (0.9 cm) solid braid polypropylene, or equivalent, line attached; and
5. PFDs in number equaling the skiff rating for the maximum number of personnel allowed on board.
6. Fire Extinguisher.
7. In locations where waters are rough or swift, or where manually operated boats are not practical, a power boat suitable for the waters shall be provided and equipped for lifesaving.

Skiffs and power boats shall have buoyant material capable of floating the boat, its equipment, and the crew.

On vessels (such as skiffs) without permanently mounted navigation lights, portable battery-operated navigation lights will be available and used for night operations.

3.0 VESSEL GENERAL PERMIT FOR DISCHARGES INCIDENTAL TO THE NORMAL OPERATION OF VESSELS (VGP) AUTHORIZATION TO DISCHARGE UNDER THE NATIONAL POLLUTANT DISCHARGE ELIMINATION SYSTEM (NPEDES)

3.01 Reference

https://www3.epa.gov/npdes/pubs/vessel_vgp_permit.pdf

3.02 VGP Authorization

Contractor is required to obtain the VGP Authorization under the NPEDES program with the EPA for all vessels on the project as follows:

1. To obtain authorization under this permit, you must meet the Part 1.2 eligibility requirements. If your vessel meets the requirements under Part 1.5.1.1, you must submit a Notice of Intent (NOI) to receive permit coverage.
2. Prior to NOI submission, owner/operators of these vessels are authorized to discharge under this permit. This automatic authorization extends until owner/operators of vessels that meet the requirements under Part 1.5.1.1 submit NOIs, but shall not extend beyond 9 months after permit issuance.
3. Owner/operators of vessels that meet the requirements under Part 1.5.1.2 are automatically authorized to discharge under this permit and are not required to submit NOIs.

3.03 General Scope of the VGP

This permit is applicable to discharges incidental to the normal operation of a vessel identified in Part 1.2.2 into waters subject to this permit. These waters are “waters of the United States” as defined in 40 CFR 122.2 (extending to the outer reach of the 3 mile territorial sea as defined in section 502(8) of the CWA.) This includes all navigable waters of the Great Lakes subject to the jurisdiction of the United States. Recreational vessels as defined in section 502(25) of the Clean Water Act are not subject to this permit. Such vessels are not subject to NPDES permitting under Section 402 of the Clean Water Act, and are instead subject to regulation under Section 312(o) of the Clean Water Act. In addition, with the exception of ballast water discharges, non-recreational vessels less than 79 feet (24.08 meters) in length, and all commercial fishing vessels, regardless of length, are not subject to this permit. See P.L. 110-299. Commercial fishing vessels and other non-recreational vessels less than 79 feet are eligible for permit coverage under this permit for their ballast water discharges. If auxiliary vessels or craft, such as lifeboats, rescue boats, or barges onboard large vessels require permit coverage (i.e. they are greater than 79 feet in length), they are eligible for coverage under this permit and are covered by

submission of the Notice of Intent for the larger vessels. Nothing in this permit shall be interpreted to apply to a vessel of the Armed Forces as defined in § 312(a)(14) of the Clean Water Act.

Vessel Discharges Eligible for Coverage Unless otherwise made ineligible under Part 1.2.3, the following discharge types are eligible for coverage under this permit:

1. Deck Runoff and Above Water Line Hull Cleaning
2. Bilgewater/Oily Water Separator Effluent
3. Ballast Water
4. Anti-fouling Leachate from Anti-Fouling Hull Coatings/Hull Coating Leachate,
5. Aqueous Film Forming Foam (AFFF)
6. Cathodic Protection
7. Chain Locker Effluent
8. Controllable Pitch Propeller and Thruster Hydraulic Fluid and other Oil Sea Interfaces including Lubrication discharges from Paddle Wheel Propulsion, Stern Tubes, Thruster Bearings, Stabilizers, Rudder Bearings, Azimuth Thrusters, and Propulsion Pod Lubrication
9. Graywater
10. Motor Gasoline and Compensating Discharge
11. Non-Oily Machinery Wastewater
12. Refrigeration and Air Condensate Discharge
13. Seawater Cooling Overboard Discharge (Including Non-Contact Engine Cooling Water; Hydraulic System Cooling Water, Refrigeration Cooling Water)
14. Boat Engine Wet Exhaust
15. Underwater Ship Husbandry

4.0 REFERENCE A

Reference A: OSHA Standards (29 CFR) for Waterfront Construction and Working Near Water

4.01 1926.605 Marine Operations and Equipment

Operations fitting the definition of "material handling" shall be performed in conformance with applicable requirements of Part 1918, "Safety and Health Regulations for Longshoring" of this chapter. The term "longshoring operations" means the loading, unloading, moving, or handling of construction materials, equipment and supplies, etc. into, in, on, or out of any vessel from a fixed structure or shore-to-vessel, vessel-to-shore or fixed structure or vessel-to-vessel.

4.02 1926.605(b) Access to Barges

Ramps for access of vehicles to or between barges shall be of adequate strength, provided with side boards, well maintained, and properly secured.

Unless employees can step safely to or from the wharf, float, barge, or river towboat, either a ramp, meeting the requirements of paragraph (b)(1) of this section, or a safe walkway, shall be provided.

Jacob's ladders shall be of the double rung or flat tread type. They shall be well maintained and properly secured.

A Jacob's ladder shall either hang without slack from its lashings or be pulled up entirely.

When the upper end of the means of access rests on or is flush with the top of the bulwark, substantial steps properly secured and equipped with at least one substantial hand rail approximately 33 inches in height, shall be provided between the top of the bulwark and the deck.

Obstructions shall not be laid on or across the gangway.

The means of access shall be adequately illuminated for its full length.

Unless the structure makes it impossible, the means of access shall be so located that the load will not pass over employees.

4.0.3 1926.605(c) Working Surfaces of Barges

Employees shall not be permitted to walk along the sides of covered lighters or barges with coamings more than 5 feet high, unless there is a 3-foot clear walkway, or a grab rail, or a taut handline is provided.

Decks and other working surfaces shall be maintained in a safe condition.

Employees shall not be permitted to pass fore and aft, over, or around deck loads, unless there is a safe passage.

Employees shall not be permitted to walk over deck loads from rail to coaming unless there is a safe passage. If it is necessary to stand at the outboard or inboard edge of the deck load where less than 24 inches of bulwark, rail, coaming, or other protection exists, all employees shall be provided with a suitable means of protection against falling from the deckload.

4.0.4 1926.605(d) First-Aid and Lifesaving Equipment

Provisions for rendering first aid and medical assistance shall be in accordance with Subpart D of this part.

The employer shall ensure that there is in the vicinity of each barge in use at least one U.S. Coast Guard-approved 30-inch lifering with not less than 90 feet of line attached, and at least one portable or permanent ladder which will reach the top of the apron to the surface of the water. If the above equipment is not available at the pier, the employer shall furnish it during the time that he is working the barge.

Employees walking or working on the unguarded decks of barges shall be protected with U.S. Coast Guard-approved work vests or buoyant vests.

4.0.5 1926.605(e) Commercial Diving Operations

Commercial diving operations shall be subject to Subpart T of Part 1910, 1910.401-1910.441, of this chapter.

4.0.6 1926.106 Working Over or Near Water

Employees working over or near water, where the danger of drowning exists, shall be provided with U.S. Coast Guard-approved life jacket or buoyant work vests.

Prior to and after each use, the buoyant work vests or life preservers shall be inspected for defects which would alter their strength or buoyancy. Defective units shall not be used.

Ring buoys with at least 90 feet of line shall be provided and readily available for emergency rescue operations. Distance between ring buoys shall not exceed 200 feet.

For all work which will be performed over or near water as defined in 29 CFR 1926.106(d) the Contractor shall have a skiff in the water at all times as required by regulation. The skiff must meet US Coast Guard requirements and be manned by a person holding a Masters license for the craft and be trained in water rescue.

B4. U.S. COAST GUARD REQUIREMENTS

1.0 GENERAL

1.0.1 Scope

Requirements set forth herein are in addition to and shall be considered as complementary to the balance of the Contract requirements.

For all operations to be performed in, on, or over the Lower New York Bay, East River, Harlem River, Broad Channel, Rockaway Inlet, or other adjacent waterways, as applicable to the Contract, the Contractor shall comply with all applicable government requirements and regulations pertaining to the Work. The securing of permits necessary for the performance of this Work shall be routed through the Engineer.

Notification and Request for Approval Requirements

At no time during the Work will the following activities be permitted without prior notification and specific approval of the USCG Sector New York Waterways Management Division for location and duration:

- Closing the waterways.
- Removing or restricting existing navigation lights and/or markings.
- Reducing or altering vertical or horizontal clearances.

All requests shall be routed through the Engineer a minimum of 30 days before the action will be required If, in the case of waterway closures, the scheduled Work cannot be completed within the approved closure period, notify the U.S. Coast Guard (USCG) immediately upon learning of the delay. With the approval of the USCG, the work shall continue on a 24-hour basis until the waterway is restored to normal operation. The USCG and the Engineer shall be immediately notified when normal operation is restored.

1.0.1.1 Port of New York / New Jersey Security Provisions

Security Zone / Exclusionary Area

- A twenty-five (25) yard (23 m) Security Zone / Exclusionary Area, has been established by the U.S. Coast Guard around all bridge piers in the New York / New Jersey area.

Advance Written Approval Requirements

- No construction workers, work barges or vessels of any type may enter these Security Zones without advance written approval from the U.S. Coast Guard Captain of the Port, NY District, through the Waterways Management Division, and the Vessel Traffic Service Activities New York (VTS).
- All requests made by the Contractor through the Engineer to enter into these Security Zones must be made in writing, not less than 30 days prior to the commencement of any work, to USCG Sector New York Waterways Management Division, in accordance with the forms attached to this specification, with a copy to the Engineer. Contractor shall comply with all Security Zone requirements of the U.S. Coast Guard, even if different than those set forth here, at no additional cost to the Department.

Initial Submittal and Information Requirements

- Submit a complete list of all construction personnel or persons that will enter into the Security Zones, including name, Social Security Number, Date of Birth, Contractor’s Business Name, Business Address, Point of Contact / Responsible Person in- Charge of Work Activities

(Construction Superintendent) and Telephone Numbers (Main Office, Field Office Numbers and Cell Phones).

- Submit Project and Work Description and include descriptions of work activities and work site in the Security Zone, together with work location(s), dates, times and Project Duration, Barge/Vessel/Boat Name(s) / Type(s) & Size(s).
- Submit a Bridge Branch Construction Approval Letter.
- Submit above items to the U.S. Coast Guard Waterways Oversight Branch (USCG/WOB), and call (718) 354-4193 or 4355 to make the required arrangements, not less than 30 days in advance of any work, with a copy to the Engineer.

Changes Subsequent to Approval by the USCG/WOB

- If any changes are made to the information provided and approved including, but not limited to, additional personnel hired or any other changes in the existing personnel roster, a revised written submission is required.
- Submit all information for approval, including all revisions to the required information, as identified above, to the U.S. Coast Guard Waterways Oversight Branch not less than ninety-six (96) hours / four (4) days in advance of the expected change, with a copy to the Engineer.

Daily Notification Requirements

- After the initial written approval for entry into the Security Zone has been received from the U.S. Coast Guard, (USCG) the Contractor is to first notify the U.S. Coast Guard / Vessel Traffic Service at (718) 354-4088 on a daily basis, while working within the Zone; and upon contacting the USCG, immediately report to the Engineer the context and outcome of all communications with the USCG.
- Daily notification shall include, but not limited to, the following times when entering or leaving the Security Zone during any part of a day:
  1. Prior to entering the Work Site at the start of each workday.
  2. Prior to leaving the Work Site at any time during the workday.
  3. Prior to returning to the Work Site at any time during the workday.

Upon securing the work site at the end of the workday.

- The Contractor shall notify the Engineer 24 hours in advance of any change in the location of the Contractor’s operations within a Security Zone.

2.0 REFERENCES

Part 26, Title 33, Code of Federal Regulations (33 CFR26) Vessel Bridge-to-Bridge, Radio Telegraphic Regulations.

Navigation Rules International – Inland, U.S. Government Printing Office Stock # 050-012-00376-9.

3.0 EXECUTION

3.0.1 Protection of Marine Traffic and Waterways

Conduct the Work in conformity with the orders of the Commander (OBR), First U.S. Coast Guard District. Battery Park Building, New York, NY 10004-5073 and/or the District Construction Manager, U.S. Army Corps of Construction Managers in charge of the locality so as not to obstruct or endanger navigation.

3.0.2 Plan Reviews

Four copies of the Contractor's plans, schedule and sequences of operations, and method of preventing any material from being discharged or falling from the construction area, approved by the Engineer, shall be transmitted to the U.S. Coast Guard by the Engineer. The Engineer will submit plans, schedules, methods and sequences of operations to the First U.S. Coast Guard District, Bridge Branch Commander (OBR) First U.S. Coast Guard District, Battery Park Building, New York, N.Y. 10004-5073, (212) 514-4338, for U.S. Coast Guard approval 30 days prior to any proposed work over the waterway. In addition, a sketch of the work area shall be submitted showing:

- The waterway.
- The bridge.
- The location of any restriction that will be placed in the waterway such as barges, anchors and anchor lines.
- The location, height above mean high water and a detailed description of any scaffolding or netting to be used.

The schedule should also include the daily hours of operation and indicate whether waterborne equipment will remain in the waterway at night. Daytime and twenty-four (24) hour emergency telephone numbers with personnel responsible for this work shall be forwarded to the USCG via the Engineer before commencement of Waterway-related construction. This information shall be updated immediately if any changes occur.

3.0.3 Modification to USCG Approved Plan

One copy of the plan and schedule of operation, and letter of approval by the U.S. Coast Guard, shall be retained by the Engineer. No deviation from the approved plan and schedule of operation may be made unless the modification has previously been submitted to and approved by the U.S. Coast Guard and the Engineer.

3.0.4 Hot Work

Positive means shall be taken to prevent sparks, molten metal and/or any hot work, debris, discharge of waste materials or construction material from entering the waterway or onto passing vessels. This includes sandblasting material, paint, wastewater, and any concrete or steelwork by-products. A safety section in the overall plan must be included that will achieve this purpose by utilizing fire resistive devices made of plywood and canvas suitably connected.

Where welding or burning is to take place, suitable flame-proof material shall be the uppermost protective containment material to arrest the fall of sparks or molten materials. All welding, burning, and slag removal shall cease upon approach of a vessel and not start again until the vessel has passed.

The Contractor's Supervisor shall be equipped with a complete communication system before commencement of any hot work, in accordance with information provided throughout this Section.

Hot work shall not commence unless communication has been established with the U.S. Coast Guard. An observer or observers shall be stationed so as to have unimpeded views of both upstream and downstream accesses to the waterway area thereby assuring that all workers can be alerted of a vessel's approach by appropriate means, such as an air horn.

3.0.5 Work Platforms

For work requiring outboard floats and/or for work on or under marine structures in the navigable waterway, deck, a fireproof canvas dodger shall be installed to prevent the fall of objects and debris into the water.

During night work, all around white lights or red lights to indicate safe passage around structures in the navigable waterway shall be mounted to indicate to mariners the locations of the work. All

structures lighting and day marks shall be submitted through the Engineer to the USCG for approval prior to commencement of work.

During daylight, warning signs for a 3-mile (4.8 km) range shall mark the locations of the work platforms. The signs shall face upstream and downstream so as to draw mariner's attention to the fact that critical work, affecting moving traffic, is occurring. A canvas dodger or netting shall be attached to the scaffold guardrail to prevent objects that bounce on the deck from ricocheting off the deck and into the waterway.

If permanent bridge or fender navigational lighting cannot be maintained operable or will be blocked, identical, temporary battery or electrically-operated lights shall be installed at the same locations. These temporary lights shall be visible for a distance of 2,000 yards (1.829 kilometers) on 90% of the nights of the year. Generally, a lamp of 100 candles will meet these requirements. The temporary lights shall be in place until the repairs have been completed or permanent navigational lighting has been reinstalled and determined to be operating satisfactorily. Locate and detail temporary lighting. If temporary lights are not installed in the same locations as the permanent lights, specific information regarding proposed locations compared to the permanent positions shall be provided to the Engineer for submission to and approval by the USCG.

3.0.6 Obstructions in Navigable Channel

During the progress of Work, should any materials, machinery, or equipment be lost, dumped, thrown overboard, or sunk, so as to obstruct, interfere with, or create a hazard to navigation, immediate notice shall be given to the U.S. Coast Guard and the object removed immediately. Until removal can be effected, the obstruction shall be properly marked in order to protect navigation.

Notice to the U.S. Coast Guard shall include a description and location of any such object and the action taken, or being taken, to protect navigation, and of action to remove the obstruction. Notice shall be given to the Captain of the Port– New York and New Jersey, at (718) 354-4119/4120 and U.S. Coast Guard Bridge Administration at (212) 668-7021/7165.

If, in the opinion of the Engineer, all obstructions in the channel resulting from the operations (through negligence, accident or otherwise) have not been removed, an inspection of the waterway bottom must be performed and remaining obstructions shall be removed, at no extra cost to the NYDDC.

After the completion of the work on or under the deck, the Contractor shall certify in writing to the Engineer that all equipment is accounted for and that all unused construction materials have been legally disposed.

3.0.7 Spills

Spillage of oil and/or hazardous substances is specifically prohibited by Section 311 of the Clean Water Pollution Control Act of 1971, as amended.

During the work, preventative measures to be taken include:

- Proper maintenance of construction equipment.
- Arrangement of fuel/hazardous substances handling areas so as to ensure that any spills are contained before reaching navigable waterways or their adjoining shoreline. In addition, the Engineer must be notified immediately.
- Instructions to personnel to legally dispose of oil and/or hazardous substances and not into drains, navigable waterways, or onto adjoining shorelines.

The USCG Captain of the Port and the Engineer shall be notified immediately at Commander, U.S. Coast Guard Activities New York, 212 U.S. Coast Guard Drive, Staten Island, NY 10305, (800-424-8802) or (718) 354-4119/4120 in the event of any spill.

A supply of an absorbent material shall be maintained at the work area(s) so that it may be rapidly deployed to soak up any possible spillage, pending U.S. Coast Guard arrival on the scene. The use of chemical dispersing agents and emulsifiers is not permitted without prior, specific USCG approval.

3.0.8 Floating Work Platforms

Floating work platforms equipment shall not interfere with operations in any federally maintained navigable channel. Floating equipment shall have a radiotelephone capable of operation from its main control in accordance with Part 26 Title 33, Code of Federal Regulations and shall be monitored during all periods the floating equipment is in operation.

Placement of construction equipment in the navigable channel shall be done so as not to reduce minimum horizontal clearance. Floating work equipment (barges, etc) must be moved out of the navigable channel during darkness, or after work hours. Work equipment remaining in the channel (if approved by USCG) during periods of darkness or reduced visibility must be lighted in accordance with Navigation Rules International – Inland.

Work barges remaining in the channel (if approved by the USCG) shall meet the following requirements:

- Must be lighted in accordance with Navigation Rules International-Inland.
- Shall be manned 24 hours a day 7 days per week.
- Shall have sanitary facilities and USCG approved safety equipment.
- Shall have a USCG approved motorized emergency tender boat with safety equipment.

The USCG must be notified, via the Engineer, at least three weeks in advance of the placement of equipment in the channel.

3.0.9 Dumping

Should any person throw construction materials into the waterway, they will be subject to prosecution under Federal and State laws.

3.0.10 Fleet Week

During “Fleet Week”, no reduction in vertical or horizontal clearances will be authorized; this includes work platforms, travelers, barges, tarps, etc.

3.0.11 Communication System

The Contractor’s Supervisor and all other applicable personnel involved shall be provided and equipped with a two-way communication system consisting of VHF-FM marine radio(s) capable of monitoring channels 13 and 16 during hours of operation, for the duration of the Work.

The Supervisor shall contact U.S. Coast Guard ActNy-VTS via marine radio, establish and maintain radio communications at all times, which shall include obtaining approval before commencement of any hot work, or any other work which may be considered hazardous to (or interfere with) marine traffic.

In the event of a radio failure, the Contractor shall provide a cellular phone(s) as a backup communication system, which shall be kept readily on hand, at all times, for use by the Contractor’s Supervisor and all other applicable personnel involved. The cellular phone(s) shall be capable of contacting the U.S. Coast Guard ActNy- VTS at (718) 354-4088.

The Contractor shall deliver to the Engineer a complete remote base station type VHF-FM marine radio system capable of monitoring, receiving, transmitting and amplifying all communications between and with the Contractor and/or the U.S. Coast Guard, as well as, other marine transmissions in the area, unless hand held units and related systems are deemed to be sufficient by the Engineer.

Test all communication systems at least 30 days prior to the need. Weekly test and regularly maintain all communication system equipment.

Provide sufficient spare equipment and parts to prevent any disruption in communications.

Provide additional communication system equipment as necessary to amplify the signal, as well as assist in maintaining clear and audible communications at all times.

U.S. Department of Homeland Security
United States Coast Guard

Commander
United States Coast Guard
Sector New York

212 Coast Guard Drive
Staten Island, NY 10305
Staff Symbol: (wwm)
Phone: (718) 354-4195
Fax: (718) 354-4190

Coast Guard Sector New York Request for Marine Activity Approval

Instructions: Type or print clearly and email to Jeff.M.Yunker@uscg.mil or fax to (718) 354-4190. **USCG notification, review and approval will generally take a MINIMUM of 5 business days. Authorization to proceed will not be given until five (5) days after Coast Guard approval is granted. This timeline also applies to any revisions to an approved project. Applicants must plan accordingly. Authorization is granted under the Ports and Waterways Safety Act (33 USC 1225(a)(2)(C). Violations of required safety measures may subject you to civil penalty proceedings in accordance with 33 CFR 1.07.**

Approval is required for all Activities: 1. Within any charted or Federal Channel, 2. Outside of the Pierhead Line on the East and Hudson Rivers, Upper New York Bay, and The Narrows, 3. Within the highlighted waters of the western Long Island Sound approach to NY Harbor (see attachment). Requests for Notice to Mariners outside of these work areas must be faxed to 617.223.8073 or emailed to LNM@uscg.mil by Tuesday for Thursday publication.

Pre-approval not required for: Diving Operations (outside of channel) or Side-scan, towed sonar, or other surveys, conducted as per the Inland Navigation Rules, within the VTS AOR. Just check in with VTS 15 minutes before beginning and upon completion each day at 718.354.4088. Surveys outside the VTS AOR do not need Coast Guard approval.

BRIDGE PROJECTS, INSPECTIONS, SURVEYS, ETC MUST BE APPROVED BY THE CG BRIDGE PROGRAM, CONTACT 212.668.7021 FOR GUIDANCE.

UNMANNED VESSELS WILL NOT BE AUTHORIZED OVERNIGHT IN FEDERAL CHANNELS.

Failure to properly notify the Coast Guard WILL result in project delay.

Company and Administrative Point of Contact:			
Address:			
Phone:		Fax:	
Project Location:			
Project Description:			
Start Date:	Finish Date:	Work Days: 7 Days	Work Hours:
Position of Equipment (detailed physical description):			
Vessels on Scene (Include Vessel name, description, length, beam, State Registration number):			
24-hr On-Scene Contact:			

B5. GREENHOUSE GAS EMISSIONS

The Contractor is encouraged to take steps to reduce the greenhouse gas emissions resulting from this Contract. To this end, the Contractor is strongly encouraged to take the following steps:

1. Use B20 biodiesel (ASTM D7467) in all non-road and marine equipment.
2. Maximize the use of recycled steel and aluminum in the permanent materials.
3. Divert recyclable materials from the construction and demolition waste stream. The target is a minimum of 75% diversion.

   The Contractor is required to monitor the Contractor's performance on these steps and provide reports with supporting documentation showing the actual performance achieved.

B6. EMPLOYMENT OPPORTUNITIES

1. The Contractor's attention is drawn to the following contract requirements for providing employment opportunities:
    a. HireNYC. Requirements are in the Standard Construction Contract found in Volume 2.
    b. Section 3. Requirements are in the HUD-Pages found in Volume 3.
2. Additionally, the following requirements apply:
    a. Apprentices: The Contractor must request the maximum allowable ratio of apprentices.
    b. Sandy Recovery Hiring Plan: The Contractor is required to develop and implement a Sandy Recovery Hiring Plan for low-income and very low-income persons, Sandy-impacted residents, minorities, and women in accordance with the provisions set forth below.
    c. The following requirements are part of this Contract and will be passed on to all applicable Subcontractors:
        i. Contractor and Subcontractors are encouraged to employ 20 percent Sandy-impacted residents.
        ii. Contractor and all Subcontractors agree to register all non-trade job opportunities arising from the Work under this Contract with Sandy Recovery Workforce1, managed by the NYC Department of Small Business Services and comply with the provisions set forth below.
        iii. This section does not limit Contractor's or its Subcontractors' ability to assess the qualifications of prospective workers, and to make final hiring and retention decisions. No provision of this section shall be interpreted so as to require a Contractor or Subcontractor to employ a worker not qualified for the position in question, or to employ any particular worker.
3. Strategies and Methods
    a. The Sandy Recovery Hiring Plan shall demonstrate the Contractor's capability and plan for ensuring compliance with the hiring requirements.
    b. In an effort to provide pathways for hiring of persons impacted by Sandy, the Contractor is encouraged to work with local community-based organizations, pre-apprenticeship and apprenticeship programs, and voluntary groups engaged in rebuilding efforts.
    c. The Contractor will work with Workforce1 and the City on specific outreach events including Resource Fairs and Hire on the Spot events, connecting Sandy-impacted residents with job opportunities.
    d. The Sandy Recovery Hiring Plan should show plans to work with organizations to create a pathway and opportunities on these projects and a plan to show compliance with the hiring requirements.
4. Management and Compliance
    a. The Contractor must develop a Sandy Recovery Hiring Plan for approval by the Engineer.
    b. The Contractor must provide at least one part-time staff dedicated to tracking hiring daily at the job site and ensuring implementation of the requirements of the Plan. The Contractor must comply with monthly reporting requirements set forth by the City, which include, but are not limited to, data that the City is required to report under Local Law 140 of the City of New York and Section 3 of the Housing and Urban Development Act of 1968, as well as data collection related to Executive Order 11246.

5. Specific Requirements
    a. Job Posting Requirements: The Contractor and all subcontractors agree to inform Sandy Recovery Workforce1, managed by NYC Department of Small Business Services, of all job opportunities arising from this Contract. The Contractor must inform Sandy Recovery Workforce1 of any hiring need, and the requirements of the jobs to be filled, no less than three weeks prior to the intended first day of employment for each new position, unless otherwise approved by the City. Sandy Recovery Workforce1 will work with Contractor to develop a recruitment plan which will outline clear instructions as to when, where, and how interviews will take place. Sandy Recovery Workforce1 will screen applicants based on employer requirements and refer applicants whom it believes are qualified to the Contractor for interviews. The Contractor must interview referred applicants whom it believes are qualified, and must provide feedback on all interviewed candidates within two business days and report new hires to Sandy Recovery Workforce1 once confirmed.
    b. Sandy-impacted residents will be given first priority to register for opportunities with the rebuilding effort on-line and at Workforce1.
6. Workforce Recordkeeping Requirements: The Contractor must comply with monthly reporting requirements set forth by the City, which include, but are not limited to, data that the City is required to report under Local Law 140 of the City of New York and Section 3 of the Housing and Urban Development Act of 1968, as well as data collection related to Executive Order 11246. The Contractor must provide the Engineer with a Monthly Report of such data by the fifteenth of every month for the prior month using the paper and/ or electronic reporting format provided by the Engineer and must complete all applicable fields. If reporting particular information is impossible for the Contractor, the Contractor may apply for an exemption. Any application for an exemption must be made before the expiration of thirty (30) days after the commencement date of this Agreement and shall be in the form specified by the Engineer. Exemption may be granted upon a showing that the operation of this Section will constitute a hardship, within the sole discretion of the Commissioner. The content of this Monthly Report may change at any time as the City's reporting needs change.
7. Furthermore, the Contractor must complete weekly Certified Payroll reports using the WH-347 form, available from the U.S. Department of Labor, Wage and Hour Division, which may be submitted each month concurrent with the aforementioned Monthly Report.

B7. WORK RESTRICTIONS

The Contractor's attention is drawn to the following work restrictions:

1. NYC Ferry: Public access to the Corlear's Hook NYC Ferry Terminal must be maintained at all times.

The Contractor is notified of the following official activities that will affect roadway work within the project limits:

1. DOT Weekend Walks – LUNGS Spring Awakening
2. Macy's 4th of July Annual Fireworks Celebration
3. New York Road Runners (NYRR) - NYC Half Marathon

The Contractor will be required to accommodate these activities at no additional cost, per the requirements of Standard Highway Specifications Section 6.70.11.(I).

B8. VALUE ENGINEERING CHANGE PROPOSAL (VECP)

A. Purpose and scope. The purpose of a Value Engineering Change Proposal (VECP) is to encourage the use of the Contractor's ingenuity and experience in arriving at alternative construction designs, methods, and procedures that result in a lower direct cost to accomplish a contract requirement. It is the intent of this provision to share with the Contractor any substantial direct cost savings which may be generated as a result of a VECP offered by the Contractor and approved by the Engineer. A VECP is a Contractor-initiated change request. If approved, the changes and payments will be authorized through the change order process. Before a VECP can be implemented, it must pass through three approval processes: conceptual approval, formal approval, and change order approval. To expedite the review process, the Contractor has the option of jointly submitting the conceptual VECP and the formal VECP for simultaneous review. If the VECP receives formal approval, as part of the change order process the Contractor may request that the Engineer consider granting advanced authorization of extra work.

The VECP should produce direct cost savings to the City and the public without, in the sole judgment of the Engineer, impairing essential functions and characteristics of the facility including but not limited to service life, economy of operation, ease of maintenance, desired appearance, and safety. The Contractor, when developing a VECP, shall address the designer's objectives, environmental permit requirements and regulations, commitments made to the public to mitigate the impact of construction, and other such concerns.

The "direct cost savings" is the difference of the "construction savings" generated by implementing the VECP minus reasonable "design costs" associated with the VECP. The "construction savings" is the difference between what it would cost to complete all the contract work without implementing the VECP and the cost to complete all the contract work if the VECP is implemented. This includes any changes to quantities or unit prices across the entire contract if affected by the VECP. If the estimated cost to complete all the contract work without implementing the VECP differs from the contract bid amount for the work, supporting documentation to explain the variance shall be provided. Reimbursable "design costs" are specific to engineering changes (examples: design changes, plan sheet revisions, and quantity estimating). Expenditures toward proposal preparation (examples: scheduling, documentation, cost analysis, material research, etc.) are not reimbursable.

Indirect cost savings (time, user delay, railroad force account costs, inspection costs, etc.), although considered when reviewing the merits of the VECP, are not reimbursed. A VECP may alter the progress schedule and milestone dates, which in turn could affect time-related contract provisions.

Proposals that reduce the time to complete the contract, and only result in indirect cost savings, may be accepted based on the mutual benefit derived. These proposals will be evaluated in accordance with sub-provision F. Time Savings, below.

B. Submittal of Conceptual VECP. A conceptual proposal is required for all VECP. It should outline the general technical concepts associated with the VECP and the estimated direct cost savings which may result. Upon review by the Engineer, one of the following actions will be taken:

- Conceptual approval and a request for the Contractor to submit a formal VECP.
- Request for additional information.
- Rejection of the VECP.

The Contractor shall submit an original and three copies of the conceptual VECP to the Engineer along with any additional information requested by the Engineer. The conceptual VECP should contain sufficient information for concept review and evaluation, including the following as a minimum:

1. Conceptual VECP Summary. A summary of the VECP identified as "Conceptual VECP" which includes:

a. Short title (description) of the VECP (10 or less words).

b. Contract information (Contract ID number, contract description, contractor).

c. Original total contract bid price.

d. Estimated contract cost. This may be different from the original total contract bid price due to addition or alteration of work (i.e., the estimated cost to complete the work if the VECP is not implemented). The Engineer must concur with the estimated contract cost.

e. Estimated contract cost if the VECP is implemented (excludes VECP design cost and any VECP construction savings reimbursement).

f. Estimated VECP construction savings (Item d. minus Item e.).

g. Estimated VECP design cost (Not all VECP will have design cost).

h. Estimated direct cost savings due to the VECP (Item f. minus Item g.).

i. Fifty percent of the estimated direct cost savings (This should equal the overall savings to the City).

j. Estimated total adjusted contract cost if VECP is implemented (includes VECP savings and design cost reimbursements).

k. The type of VECP (either "Cost Savings" or "Time Savings Only").

l. Date by which the authorization of extra work (change order) must be granted.

m. Identification of any new or existing contract pay items requiring agreed prices.

n. Identification of any materials with long lead times (to order, fabricate, deliver, etc.) that may require purchase authorization from the Engineer prior to formal approval/disapproval of the VECP, or may delay the implementation of the VECP. Identify any date by which authorization to order these materials must be received without affecting the progress schedule.

o. A basic description of the VECP and associated benefits and impacts (progress schedule, environmental, maintenance & protection of traffic, quality, etc.).

2. Conceptual Plans. Conceptual plan drawings.

3. Design Criteria. If the VECP proposes design changes, supporting technical design criteria shall be provided.

4. Schedules.

   a. The most recently approved baseline progress schedule.

   b. The most recently approved construction progress schedule update.

   c. A draft, proposed, revised progress schedule illustrating the impacts of the VECP. The schedule shall identify: (1) the time required to develop a formal VECP; (2) the time required to order, fabricate, and deliver materials with long lead times; (3) the time required to obtain any environmental permits or other required approvals; (4) any anticipated progress schedule changes (contract completion date, milestone dates, task durations, etc.); (5) the latest date by which authorization of the VECP extra work must be granted without affecting the schedule.

      The draft progress schedule should provide a sufficient level of detail upon which the reasonableness of the VECP can be determined.

Should the Engineer find that insufficient time is available for review and processing, it may reject the VECP solely on such basis. If the Engineer fails to respond to the VECP by the date specified, the Contractor will consider the VECP rejected and will have no basis for a dispute against the City as a result thereof. The Engineer may accept a VECP that requires a contract time extension if sufficient cost savings are anticipated.

5. Estimate of costs. The conceptual VECP estimate of costs should include sufficient information to determine the reasonableness of the VECP. If the proposal requires the ordering of materials, the Contractor needs to provide documentation from the suppliers to justify the cost of the materials.
6. Previous Use or Testing. A description of any previous use or testing of the VECP on another City contract or elsewhere, the conditions and results therewith. The Contractor shall submit the technical aspects of the VECP in sufficient detail so the Engineer can determine the suitability of the VECP from an engineering perspective. If the technology is new, test information shall be provided to the Engineer's satisfaction. If a similar VECP was previously submitted on another City contract, indicate the date, contract number, and the action taken by the City.

C. Submittal of Formal VECP. Upon notification by the Engineer that the conceptual VECP is approved and a formal VECP is necessary, the Contractor will submit to the Engineer an original and three copies of the following materials and information for each formal VECP along with any additional information requested by the Engineer:

1. Formal VECP Summary. A summary of the VECP, identified as "Formal VECP", which follows the conceptual VECP summary format and information requirements (Information and estimates may have changed since the conceptual VECP).
2. Complete Plans and Specifications. Complete plans and specifications, which meet City standards, showing the proposed changes relative to the original contract features and requirements. The City requires a Professional Engineer's stamp and signature on any significant engineering changes.
3. Field Change Sheets. Field change sheets and/or shop drawings. If the VECP results in a field change, and those items affected require the submission of shop drawings, the shop drawings will not be accepted unless accompanied by corresponding field change sheets.
    1. Documents shall be developed in compliance with City requirements. The City requires a Professional Engineer's stamp and signature on any significant engineering changes.
4. Schedules. The same information requirements as for the conceptual VECP apply, except that a formal, proposed, revised progress schedule is required.
5. Cost Analysis. A complete cost analysis indicating quantity changes, unit price changes, and new contract pay items. As a minimum it shall include:
    a. An itemized comparison of estimated costs to complete all the contract work with implementing the VECP and without implementing the VECP.
    b. Proposed unit prices for any new contract pay items introduced by the VECP and appropriate documentation for review under the Agreed Price process.
    c. Proposed unit prices for any existing contract pay items for which agreed prices are sought due to a significant change in character of work (quantity or complexity). Appropriate documentation for review under the Agreed Price process is required.
    d. The cost of any items with long lead times (e.g., materials ordered) required after conceptual approval and before final approval shall be identified.

7. Differences. Full descriptions of the difference between the existing contract requirements and the proposed changes, and the comparative advantages and disadvantages of each, including considerations of service life, economy of operation, ease of maintenance, traffic flow, safety, desired appearance, progress schedule, and any increase/reduction of environmental impacts.
8. Technical Presentation. The Contractor may be required to conduct a technical presentation as part of the review process.
9. Cost Documentation. All formal VECP costs submitted shall be supported by documentation as required by Article 26 of the Standard Construction Contract.

The Engineer will not formally approve any VECP until all required VECP documentation has been submitted and is acceptable to the Engineer.

A formal VECP may be submitted concurrently with the conceptual VECP, however, the Contractor assumes any costs associated with the formal VECP at its own risk. Reimbursable costs will be considered only if the conceptual VECP is approved. Clearly identify whether a VECP is being submitted for conceptual approval, formal approval, or both.

Once a formal VECP has been approved, the VECP will then be submitted as a change order and processed accordingly. The Contractor is responsible for submitting all appropriate information to the Engineer in a timely manner.

D. Conditions. The Contractor shall not base any bid prices on the anticipated approval of a VECP and should recognize that any VECP may be rejected. The following terms and conditions apply to VECP:

1. A VECP will only be considered after the contract is awarded.
2. A VECP applies only to the contract for which it was submitted. One VECP shall not be submitted for multiple contracts. Approval or disapproval of a VECP on one contract does not guarantee approval or disapproval on another contract.
3. The VECP becomes the property of the City and will contain no restrictions imposed by the Contractor on its use or disclosure. The City will have the right to use, duplicate, and disclose in whole or in part any data necessary for the utilization of the VECP. The City retains the right to utilize any accepted or rejected VECP or part thereof on any other project without any obligation to the Contractor.
4. Approval of the conceptual VECP in no way obligates the Engineer to approve the formal VECP. The Contractor will have no claim against the City as a result of the rejection of any such conceptual or formal VECP except as otherwise provided in Sub-Provision E.4, below.
5. When the Engineer is in the process of making design and specification revisions and a Contractor submits a VECP with similar revisions, the Engineer will reject the VECP and proceed without any obligation to the Contractor.
6. A VECP will be considered only if reasonable, cost-effective options are not provided in the contract documents.
7. The Engineer will be the sole judge as to whether a VECP qualifies for consideration and evaluation. It may reject any VECP that requires excessive time or costs for design review, evaluation, and/or investigations. The Engineer will be the sole judge in determining if the proposed VECP will result in a sufficient amount of direct or indirect cost savings to offset the City's effort to review the VECP.

8. A VECP shall be consistent with DDC's design policies and basic design criteria, provide the same service life or more, facilitate economy of operations, ease of maintenance, and achieve the desired appearance and safety.
9. A VECP will not be allowed that changes the type and/or thickness of the pavement structure and material, or solely substitutes one material for another. Examples of materials that may fall into this inappropriate substitution situation are drainage pipes, coatings, pavement markings, etc. The simple elimination of work does not necessarily constitute a VECP, however, a VECP which introduces a simple material substitution, or elimination of work, may be considered if it is accompanied by a design change or change in the construction method. A simple material substitution which introduces a new material to the DDC may be also considered.
10. The VECP will not be experimental in nature, but will have been proven to the Engineer's satisfaction under similar or acceptable conditions on another City contract or at another location acceptable to the Engineer.
11. If the Engineer requires any additional information to evaluate the VECP, this information shall be provided in a timely manner. Unless otherwise mutually agreed upon, failure to do so will result in the rejection of the VECP. An incomplete or a poor quality VECP which hinders the Engineer's review may also result in the rejection of the VECP.
12. The Contractor shall encourage submissions of VECP from an approved subcontractor, provided that reimbursement is made by the City to the Contractor and that the terms of payment to the Subcontractor are satisfactorily negotiated and accepted before the VECP is submitted to the Engineer. Subcontractors may not submit a VECP except through the Contractor.
13. A VECP approved by the Engineer is considered to be a revision to the contract documents and progress schedule. Consequently, if unsatisfactory results are being achieved or adjustments are necessary during implementation of a VECP, the rejection of work, removal of work, addition of work, or revision of work shall be evaluated in accordance with the Contract requirements.
14. All contract pay items and quantities referenced in the VECP construction savings analysis shall be Engineer-approved contract provisions. Any extra work, inclusion of an omission of work, or other field changes shall be authorized prior to use in VECP savings calculations.
15. No work related to a VECP will be performed under allowance items. Agreed prices must be reached for any contract pay items related to the VECP before the VECP is approved. If the Contractor is deemed to have taken reasonable diligence in determining the work involved but if during the construction of VECP work a significant change in the character of work occurs, the Engineer may consider new agreed prices.
16. The Contractor will receive written notification from the Engineer when the VECP is approved. Material orders placed prior to VECP approval shall be submitted at the Contractor's risk.
17. Once a VECP has been approved, the VECP will then be submitted as a change order and processed accordingly. The Contractor is responsible for submitting all appropriate information to the Engineer in a timely manner.

E. Payment. If the VECP is accepted by the Engineer, the changes and payments will be authorized through a change order. Reimbursement to the Contractor will be made as follows:

1. A VECP introduces two individual payments, one for VECP construction savings, and one for VECP design cost. The contract pay item changes along with the VECP construction savings and design cost reimbursements to the Contractor should be submitted in one change order.

2. The City will pay to the Contractor 50% of the VECP construction savings. The VECP construction savings is the difference between the actual contract costs with the VECP implemented and a detailed estimate of what it would have cost to complete the contract work without implementing the VECP, based on final construction. If final construction savings differs from the amount estimated in the formal VECP, an adjustment may be made and included in another change order. The VECP construction savings reimbursement to the Contractor will not be paid until the VECP work has been completed (progress payments on the completed VECP work are allowed). The Engineer may withhold all or a portion of the payment for the Contractor's share of the VECP construction savings until the final contract accounting. In the event that at final contract accountings the implementation of VECP actually results in no construction savings, then the Contractor will receive no VECP construction savings payment.

   The Engineer is the sole judge in deciding the construction savings due to the implementation of the VECP. The Engineer will withhold VECP construction savings reimbursement until the Contractor supplies all required VECP documents.

3. If a design cost is submitted for a VECP, the City will pay to the Contractor a 50% share of the Contractor's reasonable cost for design incurred after conceptual VECP approval. If the design cost submitted for the Engineer’s approval is deemed unreasonable, only 50% of the design cost deemed to be reasonable will be reimbursed. Not every VECP will have a design cost associated with it. The Engineer is the sole judge in determining the reasonableness of the design cost. Reimbursable design costs are for engineering changes. Preparation and submission of the proposal (e.g., savings analysis, progress scheduling, etc.) are not considered design costs and are not reimbursable. Reimbursable VECP design may be performed by a consultant or directly by the Contractor. The Contractor shall not be charged for, nor can the Contractor claim, any VECP design performed by the City.

   The design cost shall be submitted as a lump sum item with supporting documentation. The supporting documentation shall include itemized direct salary costs (rates & hours), overhead (only for consultant design), and direct non-salary costs. Payment for direct salary costs and overhead will be limited to the current City reimbursement policies for Consultant Engineering agreements.

   For consultant design, reasonable overhead on the direct technical salaries will be reimbursed. For Contractor design, overhead is not reimbursable for direct salary costs.

   Overhead shall not be charged for direct non-salary costs whether incurred by the Contractor or by a consultant. Payment for direct non-salary costs will be made at actual cost paid. Although for certain direct non-salary costs (lodging, meals, mileage) the rates must meet the requirements of Comptroller’s Directive 6.

   The subtotal of direct salary costs, overhead, and direct non-salary costs shall be considered a "professional service fee" and reimbursed in accordance with §109-05B.3. Service Charges. A maximum 5% for the Contractor's contract supervision and overhead is allowed, in addition to any overhead submitted for consultant direct salary costs. All design costs are subject to audit.

   Additional supporting documentation (receipts, time sheets, etc.) shall be supplied in a timely manner if requested by the Engineer.

   In the case of a formal VECP being jointly submitted with the conceptual VECP, the City will pay to the Contractor a 50% share of the Contractor's reasonable cost for design specific to the development of the formal VECP (nothing toward the conceptual VECP) if the conceptual VECP is approved.

4. In the event of the Engineer's conceptual approval of a direct cost savings VECP, and the Contractor is directed to proceed with the VECP implementation steps and final approval is not reached, regardless of whether due to the actions of the City or the Contractor, 50% of the total reasonable design costs will still be reimbursed to the Contractor. If "advance" written approval was given to proceed with the work, procure materials, and begin fabrication; and rejection occurs, the work and fabrication costs will be reimbursed in accordance with the Standard Construction Contract. Only those materials not incorporated and unique to the contract (i.e., not restockable) will be evaluated for payment.
5. There will be no reimbursement for any costs incurred for the conceptual VECP or prior preparations.
6. If more than one VECP is approved for a contract, construction savings and design costs shall be tracked separately for each VECP.
7. When multiple submittals of information for a VECP are required to satisfy the information needs of the conceptual or formal VECP procedure, and contract timing will be negatively impacted before review and subsequent approval can be given by the Engineer, then the VECP may be rejected. In such cases, there will be no claim by the Contractor for design costs or loss of anticipated savings and/or profits.
8. VECP payments only involve direct savings or costs. Indirect savings or costs (time, user delay, contract delay, etc.) are not included in VECP payment calculations. The calculations of VECP payments are independent from the payments or penalties for contract time related issues.

   If a VECP revises the progress schedule, the contract milestones upon which time related provisions are based may be affected. Time savings resulting from a VECP may be realized in a time related contract provision. Conversely, if a VECP negatively affects a progress schedule, time related contract provisions may be negatively affected.

F. Time Savings. The Engineer will consider proposals that result in time savings and at the same time may increase the cost of the contract. The Engineer will be the sole judge as to whether the benefits of completing the contract or a phase before the scheduled completion date or milestone offsets any increase in cost. These submittals, while not constituting a Value Engineering Change Proposal, will be reviewed using the VECP approval process. In addition to information required in Sub-Provision B, “Submittal of Conceptual VECP” above and Sub-Provision C, “Submittal of Formal VECP” above, the Contractor shall provide the Engineer the anticipated amount of time to be saved and sufficient information to enable the Engineer to calculate and evaluate the cost benefit of the savings in user delay. Time savings generated by the VECP may be claimed under an existing time related contract provision. If the time savings VECP increases the cost of the contract, the additional cost shall not be subtracted from any time related contract provision payments.

G. Significant Changes. Once a VECP is approved, any future significant change is no longer based on the original contract bid conditions (quantity, nature or kind of a material involved), but rather on the conditions as adjusted by the VECP (adjusted quantities, anticipated site conditions and materials, etc.).

All significant changes shall be agreed upon prior to formal VECP approval. If after formal VECP approval, an unforeseen change in the VECP work causes a significant change in the character of work, quantities and prices may be adjusted and the VECP savings shall be adjusted accordingly.

B9. Reference Documents

The following reference documents are attached to the Contract:

(1) East Side Coastal Resiliency: Mitigation Work Plan for MGP-Related NAPL Contamination, prepared by AKRF under the Hazen and Sawyer / AKRF JV.
(2) East Side Coastal Resiliency: Remedial Action Plan (and associated CHASP), prepared by AKRF under the Hazen and Sawyer / AKRF JV.
(3) East Side Coastal Resiliency: Supplemental Subsurface Investigation Report - Borough of Manhattan, New York, prepared by AKRF under the Hazen and Sawyer / AKRF JV.
(4) East Side Coastal Resiliency: Environmental Subsurface Investigation Report for Parallel Conveyance & Isolation Gates - Borough of Manhattan, New York, AKRF-KSE JV.
(5) East Side Coastal Resiliency Project Area One: Subsurface Exploration Report - Borough of Manhattan, New York, prepared by AKRF under the Hazen and Sawyer / AKRF JV.
(6) East Side Coastal Resiliency Project Area Two: Subsurface Exploration Report - Borough of Manhattan, New York, prepared by AKRF under the Hazen and Sawyer / AKRF JV.
(7) Remedial Investigation Report, Operable Unit 2 (OU2) – Former East 21st Street Works – Site # V00536, New York, New York, AECOM.
(8) Remedial Investigation Report, Stuyvesant Town Former Manufactured Gas Plant Sites, VCA Index D2—0003-02-08, AECOM.
(9) Remedial Investigation Report for Operable Unit 2 – East 11th Street Works Site – NYSDEC Site No. V00534, New York, New York, ARCADIS.
(10) Storm Water Pollution Prevention Plan (SWPPP).
(11) Documents listed as Appendix A on Contract Drawing G007.
(12) As-Builts: “PLANS FOR IMPROVING PORTIONS OF THE FRANKLIN D ROOSEVELT AND PORTIONS OF THE HARLEM RIVER DRIVE”

The referenced documents are available in the PASSPort Procurement.

B10. Envision

The DDC is committed to the principles of sustainable development and will submit this project for evaluation as per the Institute for Sustainable Infrastructure's ENVISION Sustainable Infrastructure Framework. As such, the Contractor is required to provide support and assistance to DDC in the required documentation for applicable contractor related activities for the ENVISION verification process. DDC will be responsible for the Envision submittal process, including any fees or required Sustainability professionals.

The ENVISION: Sustainable Infrastructure Framework Guidance Manual is available at: https://sustainableinfrastructure.org.

B11. Payment for Maintenance and Protection of Traffic

This contract has itemized payments for Maintenance and Protection of Traffic work as described in Standard Highway Specifications Section 6.70.13.

For all of the itemized MPT devices, the following clarification is provided regarding minor or incidental movement of the devices. Minor movements of MPT devices will not be considered as movement to a new location and are not eligible for additional payment. Minor movement includes:

- Movement from one side of the roadway to the other side;
- Movement to adjust the roadway or work zone width;
- Movement required to access the work zone or to secure the work zone;
- Linear movement of less than one block within an established work zone; or
- Rearrangement within a work area.
- Daily replacement to approximately the same location.

B12. Special Inspection and Department of Buildings.

Portions of work under this contract are subject to the provisions of the New York City Construction Codes, as noted on the Contract Drawings.

Work subject to the provisions of the New York City Construction Codes shall meet the requirements of the New York City Construction Codes and the following:

1. Inspection of selected materials, equipment, installation, fabrication, erection or placement of components and connections made during the progress of the Work to ensure compliance with the Contract Documents and provisions of the New York City Construction Codes, shall be made by a Special Inspector. The City of New York will retain the services of the Special Inspector and bear the costs for the performance of Special Inspections in compliance with NYC Construction Codes requirements or as additionally may be called for in the project specifications. The Special Inspector shall be an entity compliant with the requirements of the New York City Construction Codes.

2. The contractor shall be responsible for, and bear all costs associated with the filing and securing of approvals, if any, as required in the specifications.

   This work may include but is not limited to:

   a. Engaging the services of a New York City licensed Concrete Testing Lab for the review and approval of concrete design mix, testing, signatures and professional seals, etc., compliant with NYC Department of Buildings requirements, for each concrete design mix.

   b. Engaging a professional engineer or registered architect to act as the applicant and prepare or supervise the preparation of all construction documents and specifications submitted under the required applications.

   Where a Form TR3 is required, concrete mix design approval by the QA & Construction Safety Bureau per Section 3.05.4 of the NYCDOT Standard Highway Specifications is not required.

3. The Contractor shall notify the relevant Special Inspector in writing at least 72 hours before the commencement of any work requiring Special Inspection. The contractor shall be responsible for, and bear related costs to assure that all construction or work shall remain accessible and exposed for inspection purposes until the required inspection is completed.

4. Inspections and tests performed under “Special Inspection” shall not relieve the Contractor of the responsibility to comply with the Contract Documents, and that there is no warranty given to the Contractor by the City of New York in connection with such inspection and tests or certifications made under “Special Inspections”.

5. The contractor must coordinate with the Engineer to provide access and schedule the work for inspection by the Special Inspector.

B13. Coordination with Other Contractors

The East Side Costal Resiliency Project is being executed by multiple simultaneous construction contracts, including this contract. Accordingly, the Contractor is required to coordinate with the Other Contractors as specified in Article 12 of the Standard Construction Contract.

B14. Revisions: Specifications and Contract Drawings

The Specifications and the Contract Drawings for the Project are revised in accordance with the provisions set forth below.

(1) Owner: Wherever the term "Owner" is used in the Specifications and/or the Contract Drawings, such term shall mean the City of New York.

(2) Other Entities: In the event any entity other than the City of New York is referred to or named as the "Owner" in the Specifications and/or the Contract Drawings, the name of such other entity is deemed deleted and replaced with the "City of New York".

(3) Architect: Wherever the words "Department's Authorized Representative", "Construction Manager", "Landscape Architect", "Project Manager", "Architect", "Architect / Engineer", "Architect and/or Engineer", or similar are used in the Specifications and/or the Contract Drawings, such words are deemed deleted and replaced with the word "Engineer".

(4) Products / Manufacturers: Wherever the Specifications and/or the Contract Drawings require the contractor to provide a particular product (i.e., material and/or equipment) from a designated manufacturer and/or vendor, the term "or approved equal" is deemed inserted, even if only one product and/or manufacturer is specified, except as otherwise provided below.

(5) Special Experience Requirements: Special Experience Requirements for the Project, if any, are set forth in the Bid Booklet. Special Experience Requirements may apply to contractors, subcontractors, installers, manufacturers and/or suppliers. If the Specifications and/or the Contract Drawings contain any Special Experience Requirement that is not set forth in the Bid Booklet, such Special Experience Requirement is deemed deleted, except as otherwise provided below.

(a) Any Special Experience Requirement that provides that the entity performing the work or supplying the material must have more than three (3) years of experience, is revised to provide that the entity performing the work or supplying the material must have three (3) years of experience, except as described in paragraph (b) below.

(b) Any Special Experience Requirement that pertains to the abatement of hazardous materials shall not be subject to the deletion and/or revision set forth above. Such Special Experience Requirement shall remain in full force and effect.

(c) Any Special Experience Requirement that provides that the entity performing the work must be licensed, authorized, certified, approved by or acceptable to the manufacturer, is deemed deleted and replaced with the requirement that such entity must be properly trained for the specified work.

(d) Any Special Experience Requirement that provides that the individual workers performing the work must be licensed, authorized, certified, approved by or acceptable to the manufacturer, is deemed deleted and replaced with the requirement that such individual workers must be properly trained for the specified work.

(6) Contractor Retained Engineer: If the Specifications and/or the Contract Drawings require the Contractor to retain an Engineer to provide engineering services for the Project, the following sentence is deemed inserted: "Such Engineer must be a Professional Engineer, licensed in the State of New York."

(7) Sustainability Provisions: If the Specifications and/or the Contract Drawings require the Contractor to purchase FSC certified wood, rapidly renewable materials, materials within 500 miles, metal materials, products, anchors, framing and accessories with recycled content, such provisions are deemed deleted and replaced with the requirement that if the contractor has

purchased FSC certified wood, rapidly renewable materials, materials within 500 miles, metal materials, products, anchors, framing and accessories with recycled content, the contractor shall submit such forms or documentation as may be required by the City in order for the USGBC to certify that the Project qualifies for the related LEED credit(s).

(8) Exculpatory Provisions: In the event the Specifications and/or the Contract Drawings contain any provision whereby the consultant and/or any of its officers, employees or agents, including subconsultants, is absolved of responsibility for any act or omission, such provision is deemed deleted.

(9) Insurance: Provisions regarding insurance coverage the Contractor is required to provide are set forth in Article 22 of the City of New York Standard Construction Contract and Schedule A, which is included in the Addendum to the General Conditions. In the event the Specifications and/or the Contract Drawings contain any provision regarding insurance requirements, such provision is deemed deleted.

(10) Indemnification: Provisions regarding indemnification are set forth in Articles 7, 12, 22 and 57 of the City of New York Standard Construction Contract. In the event the Specifications and/or the Contract Drawings contain any provision regarding indemnification, such provision is deemed deleted.

(11) Dispute Resolution: Provisions regarding dispute resolution are set forth in Article 27 of the City of New York Standard Construction Contract. In the event the Specifications and/or the Contract Drawings contain any provision regarding dispute resolution, such provision is deemed deleted.

(12) Standard Construction Contract: In the event of any conflict or inconsistency between (1) the Specifications and/or the Contract Drawings and (2) the City of New York Standard Construction Contract, the City of New York Standard Construction Contract shall prevail.

(13) Prices to Cover: All contract unit prices will include the costs of all labor, material, equipment, insurance, supervision, and insurance, whether or not specifically mentioned in the specifications.

(14) Work to be Managed solely by the NYC Department of Design and Construction (NYCDDC): In the event a provision stipulates that approval or direction will be provided by a City Agency other than the NYCDDC, that provision will be interpreted that the approval or direction will be provided by the Engineer, in consultation with the referenced Agency. This stipulation does not apply to approvals or direction that are required by Rules, Codes or other regulations; e.g. the NYC Department of Buildings will continue to enforce the NYC Building Codes and approve building permit applications.

(15) Guarantee Periods: If a Guarantee period is specified that exceeds the guarantee period listed in Schedule A, the guarantee period in Schedule A governs.

(16) Compliance with laws and regulations: all references to compliance with laws and regulations are deemed to include compliance with all local, state, and federal regulations.

(17) References:

(a) References to the General Conditions in the specifications will refer to the NYCDOT Standard Highway Specifications, Division 1 (Section 1.06), the NYCDEP Standard Sewer and Water Specifications Division 1 (Sections 10.01 through 12.07), and the Standard Construction Contract, as supplemented by the specifications in this Volume 3.

(b) References to the Materials and Methods of Construction will refer to the appropriate requirements of the NYCDOT Standard Highway Specifications, Division 2 (Sections 2.01 through 20.40) and the NYCDEP Standard Sewer and Water Specifications Division 2 (Sections 20.01 through 26.02) as supplemented by the specifications in this Volume 3.

B15. U.S. Army Corps of Engineers Requirements

The City has applied for a U.S. Army Corps of Engineers (USACE) Permit. The following USACE special conditions must be followed:

(A) This authorization is conditional on the applicant's receipt of the required Section 401 Water Quality Certification or waiver from the New York State Department of Environmental Quality (NYSDEC). No work may be accomplished until the required approval from NYSDEC has been obtained. Once obtained, the permittee, and their agents, shall be responsible for complying with any special conditions and/or stipulations incorporated into the appropriate Section 401 Water Quality Certification, and all amendments thereto.

(B) This authorization is conditional on the applicant's receipt of the required coastal zone management concurrence or waiver from the New York State Department of State (NYSDOS). No work may be accomplished until the required approval from NYSDOS has been obtained. Once obtained, the permittee, and their agents, shall be responsible for complying with any special conditions and/or stipulations incorporated into the appropriate Section 307(c) of the Coastal Management Act of 1972 Authorization from the NYSDOS, and all amendments thereto.

(C) The permittee, and their agents, shall avoid installing cofferdams within winter flounder early life stage Essential Fish Habitat between January 15 and May 31 of any year to minimize impacts to winter flounder eggs and larvae.

(D) The permittee, and their agents, shall ensure when pile driving activities occur during a time of year when ESA-listed species may be present, a vibratory hammer shall be used to the extent practicable. If an impact hammer is used, 20-minute "soft starts" shall be performed, and a wooden block shall be used to buffer the noise and vibrations during hammering.

(E) The permittee, and their agents, shall ensure cofferdams, turbidity curtains, or other methods to control turbidity are utilized when operationally feasible and ESA-listed species may be present.

(F) The permittee, and their agents, shall ensure the Section 106 Programmatic Agreement dated December 5, 2019, is adhered to.

(G) The permittee shall provide this office with a copy of all documents and correspondence required to carry out the Section 106 Programmatic Agreement dated December 5, 2019, also including the Phase 1B Archeological Report, once completed.

(H) The permittee, and their agents, shall ensure any vessels used in conjunction with this project comply with the Port of New York anchorage ground regulations codified at 33 CFR 110.155, including paragraph (1)(11) regarding vessels that impede or obstruct vessel movements.

(I) The Permittee, and their agents shall, a minimum of 14-days prior to starting operations, submit the following information to the First Coast Guard District for publication in the Local Notice to Mariners by email at LNM@uscg.mil, or faxed to (617) 223-8291):

Date of submission; Name, phone number, and email address of project point of contact; Company Name; Type of Work; Waterway and location where work will be done; Latitude & Longitude of work area (Degrees, Minutes, Thousandths of seconds); Work Start & Stop dates and Hours of Operation; Equipment on scene; Passing Arrangements / Time to move vessels to not impede

navigation; VHF Radio Channel monitored; Disposal Site (if used); NOAA Chart Number for the area.

(J) The Permittee, and their agents, shall check in with Coast Guard Sector New York Vessel Traffic Service (VTSNY) on VHF CH 12 or at (718) 354-4195 each day, fifteen minutes before starting, and upon completion, of diving operations.

(K) The permittee, and their agents, shall email Jeffrey.M.Yunker@uscg.mil each request to moor two or more barges abreast or moor any single barge perpendicular to the federal channel at any time during the project for review with VTSNY. Construction barges may be required to move with advance notice depending on the location and combined beam of the moored vessels.

(L) The permittee, and their agents, shall email Jeffrey.M.Yunker@uscg.mil the as-built coordinates for the center of each of the ten relocated sewer outfalls.

(M) The permittee, and their agents, shall notify the National Oceanic and Atmospheric Administration of the project completion and specifications so they may initiate the appropriate chart and Coast Pilot corrections. This notification must be submitted online at https://nauticalcharts.noaa.gov/charts/docs/charts-updates/Permit-Public-Notice.pdf and include a copy of the USACE permit.

(N) The permittee, and their agents, shall ensure any current, or future, outdoor lighting is located or shielded so that it is not confused with any aids to navigation and does not interfere with navigation on the adjacent waterway. If installed, the lights must be white and non-flashing.

(O) The permittee shall ensure all soil and sediment management during in-water construction adheres to a Mitigation Work Plan (MWP) approved by the New York Stated Department of Environmental Conservation (NYSDEC), and/or shall complete any sediment testing requirements, as required by the NYSDEC, prior to the start of any in-water work within the project area. A copy of any changes to the MWP, and any reports resulting from additional soil testing, shall be provided to the U.S. Army Corps of Engineers, Regulatory Branch.

(P) The permittee, and their agents, shall conduct all in-water work within the confines of a turbidity curtain and oil booms to contain soil and suspended sediments. Additionally, the permittee shall use other Best Management Practices to ensure turbidity is minimized in the water.

(Q) The permittee understands and agrees that, if future operations by the United States require the removal, relocation, or other alteration, of the structure or work herein authorized, or if, in the opinion of the Secretary of the Army or his authorized representative, said structure or work shall cause unreasonable obstruction to the free navigation of the navigable waters, the permittee will be required, upon due notice from the Corps of Engineers, to remove, relocate, or alter the structural work or obstructions caused thereby, without expense to the United States. No claim shall be made against the United States on account of any such removal or alteration.

(R) The permittee shall utilize best management practices to minimize turbidity during all in-water work activities as well as prevent construction materials, including debris, from entering any waterway to become drift or pollution hazards.

B16. Steam line at Regulator M-27

NOTICE TO BIDDERS

Contract Drawing PCC304A, "Parallel Conveyance Civil Plan and Profile Regulator M-27" indicates the presence of an "Existing 18" steam line to be removed by others." NYCDOT is in the process of issuing a notification of a modification to the owner of the steam line which will require the owner to voluntarily relocate the steam line. As such, the Contractor must not commence any Work at this location until directed by the Engineer. Once the Engineer has directed Work at this location, the Contractor must proceed with the components of the Project as directed and approved by the Engineer.

The Contractor is hereby notified that in the unlikely event that the owner of the steam line does not relocate the line in advance of the M-27 work under this Contract, the City reserves the exclusive right to modify, alter and/or omit all or portions of that Work. Options include:

A. The City directing the Contractor to construct all components of the M-27 PC leading up to the steam pipe and cap the pipes;
B. The City directing the Contractor to omit the entire M-27 PC component;
C. The Contractor and City pursuing a Value Engineering Change Proposal (VECP) per Article B8 of these S-Pages.

No claim shall be made against the City for damages for delays or actions due to such alterations / modifications / omissions, as directed by the Engineer.

B17. Omitted Work

Article 29.5 of the Standard Construction Contract is amended as follows:

29.5 The **Contractor** agrees to make no claim for damages or for loss of overhead and profit with regard to any omitted **Work**, except as follows:

For **Qualifying Omitted Work**, defined below, the **Contractor** may make a claim for documented, project specific overhead expenses actually incurred on **Qualifying Omitted Work**. Such overhead does not include delay damages of any kind, home office overhead, general overhead, or profit, or any other expense other than those described in paragraph 29.4, above. The **Engineer** will review the **Contractor's** submissions and determine the amounts payable to the **Contractor**, if any. Disputes arising hereunder are exclusively within the jurisdiction of Article 27.

For the purposes of this Article 29.5 **qualifying Omitted Work** is defined as follows:

- Change in interceptor gate quantity;
- Underruns of unit price items not related to **Work** expressly omitted by the **Commissioner** in accordance with Article 29 will not be considered **Qualifying Omitted Work**.

No Text On This Page

OCMC TRAFFIC STIPULATIONS

January 29, 2021

OCMC FILE NO: MEC-19-181
CONTRACT NO:
PROJECT: INSTALLATION OF EAST SIDE COASTAL RESILIENCY
LOCATION(S): VARIOUS LOCATION, MANHATTAN

PERMISSION IS HEREBY GRANTED TO THE **DEPARTMENT OF DESIGN AND CONSTRUCTION** AND ITS DULY AUTHORIZED AGENT, TO ENTER UPON AND RESTRICT THE FLOW OF TRAFFIC AT THE LOCATION(S) BELOW FOR THE PURPOSE OF CARRYING OUT THE ABOVE NOTED PROJECT, SUBJECT TO THE STIPULATIONS, AS NOTED BELOW:

I. SPECIAL STIPULATIONS

A. **EMBARGOES** – A CONSTRUCTION EMBARGO WILL APPLY TO THOSE LOCATIONS BELOW WHICH FALL WITHIN THE **HOLIDAY EMBARGO** OR ANY OTHER SPECIAL EVENT EMBARGOES PUBLISHED BY THE BUREAU OF PERMIT MANAGEMENT AND CONSTRUCTION CONTROL.

B. **BIKE LANES** – FOR ANY WORK IN OR AFFECTING A BIKE LANE, THE PERMITTEE MUST COMPLY WITH THE **NEW GUIDELINES FOR THE MAINTENANCE & PROTECTION OF TRAFFIC PLAN FOR CYCLING**, WHICH ARE AVAILABLE AT:

https://www1.nyc.gov/html/dot/downloads/pdf/bike-mpt-guidelines.pdf

C. **BIKE SHARE STATIONS:** THE PERMITTEE SHALL NOT REMOVE, RELOCATE, DAMAGE OR DISRUPT THE OPERATION OF EXISTING BIKE SHARE STATIONS WITHOUT FIRST CONTACTING NYC BIKE SHARE AT 855-245-3311 FOR THEIR REQUIREMENTS PRIOR TO COMMENCING WORK.

D. **CITYBENCH:** THE PERMITTEE SHALL NOT REMOVE, RELOCATE, DAMAGE OR DISRUPT AN EXISTING CITYBENCH WITHOUT FIRST CONTACTING NYC DOT AT 212-839-6569, OR VIA EMAIL AT CITYBENCH@DOT.NYC.GOV PRIOR TO COMMENCING WORK.

E. **PROTECTION OF NYC DEP GREEN INFRASTRUCTURE:** THE PERMITTEE SHALL TAKE PRECAUTION OF NYC DEP GREEN INFRASTRUCTURE IN THE RIGHT-OF-WAY. THE PERMITTEE MUST PROTECT NYC DEP GREEN INFRASTRUCTURE DOWNSTREAM OF THE WORK OR WITHIN FIVE (5) FEET OF THE WORK AREA. THE PERMITTEE MUST EMAIL NYC DEP AT SUSTAINABILITY@DEP.NYC.GOV FOR PROTECTION REQUIREMENTS PRIOR TO COMMENCING WORK. THE PERMITTEE IS RESPONSIBLE FOR RESTORATION OF DAMAGED NYC DEP INFRASTRUCTURE AS DIRECTED BY NYC DEP.

F. **BUS STOPS** – THE PERMITTEE SHALL PROVIDE WRITTEN NOTICE TO NYC DOT OCMC AND NEW YORK CITY TRANSIT (NYCT) A MINIMUM OF FIVE (5) WEEKS IN ADVANCE FOR LANE/STREET CLOSURES THAT AFFECT BUS ROUTES/BUS STOPS.

G. **STREET LIGHTS / TRAFFIC SIGNALS:** THE PERMITTEE SHALL NOT REMOVE OR RELOCATE EXISTING STREET LIGHTS OR TRAFFIC SIGNALS WITHOUT FIRST OBTAINING APPROVAL FROM NYCDOT STREET LIGHTING / TRAFFIC SIGNALS UNIT.

H. **TRAFFIC CAMERAS, DETECTION/COMMUNICATION EQUIPMENT:** IF AT ANY TIME DURING THE APPROVED WORK, THE PERMITTEE ENCOUNTERS TRAFFIC SURVEILLANCE CAMERAS, DETECTION EQUIPMENT OR ANY TYPE OF COMMUNICATION EQUIPMENT (WIRELESS OR HARD-WIRED) ON ANY NYC DOT FACILITY, THAT IS NOT INCLUDED ON THE DESIGN/BUILD DRAWINGS, THE PERMITTEE SHALL IMMEDIATELY NOTIFY NYC DOT TRAFFIC MANAGEMENT BY PHONE AT 718-433-3390 OR 718-433-3340 AND VIA EMAIL AT TMC@DOT.NYC.GOV AND AWAIT DIRECTION PRIOR TO CONTINUING WORK.

I. **METERS** – THE PERMITTEE SHALL NOT REMOVE OR RELOCATE PARKING METERS WITHOUT FIRST OBTAINING APPROVAL FROM NYCDOT PARKING METER DIVISION AT 718 – 894 – 8651.

J. **TEST PITS –** THE BELOW TRAFFIC STIPULATIONS DO NOT APPLY TO TEST PIT WORK RELATED TO THIS CONTRACT. WORK HOURS AND OTHER REQUIREMENTS FOR TEST PIT OPERATIONS MAY DIFFER FROM THE STIPULATIONS IDENTIFIED BELOW. THE PERMITTEE SHALL BE REQUIRED TO OBTAIN SEPARATE PERMITS RELATED TO TEST PITS.

K. **TEMPORARY PARKING REGULATIONS/PAVEMENT MARKINGS –** THE PERMITTEE IS REQUIRED TO INSTALL, MAINTAIN AND REMOVE ALL NECESSARY TEMPORARY PARKING AND REGULATORY SIGNS AND PAVEMENT MARKINGS, AND RESTORE THEIR ORIGINAL CONDITION PER NYC DOT STANDARDS, PRIOR TO EXPIRATION OF THEIR PERMITS. THE PERMITTEE OR AGENCY PERFORMING PUBLIC OUTREACH SHALL POST AND MAINTAIN ADVISORY SIGNS A MINIMUM OF 48 HOURS PRIOR TO CHANGING EXISTING PARKING REGULATION SIGNS TO APPROVED TEMPORARY CONSTRUCTION PARKING REGULATION SIGNS. THE ADVISORY SIGNS SHOULD BE POSTED ON ALL POLES AND DRIVE RAILS ON THE SEGMENT AFFECTED, INDICATING THE DATE OF THE CHANGE, THE NEW REGULATIONS AND A TELEPHONE NUMBER TO OBTAIN MORE INFORMATION.

L. **ACCESS TO ABUTTING PROPERTIES** – THE PERMITTEE SHALL COORDINATE ALL ACTIVITIES WITH ABUTTING PROPERTY OWNERS TO ENSURE ACCESS IS PROVIDED TO/FROM ENTRANCES/DRIVEWAYS AT ALL TIMES.

M. **AUTHORIZED PARKING** – PRIOR TO PERFORMING WORK WHICH IMPACTS AUTHORIZED PARKING, THE PERMITTEE SHALL SUBMIT IN WRITING, AND COPY OCMC-STREETS, A REQUEST TO OCCUPY SPACE CURRENTLY USED BY AUTHORIZED VEHICLES. APPROVAL MUST BE RECEIVED FROM AUTHORIZED PARKING PRIOR TO OCCUPYING THESE AREAS.

N. **NOTIFICATION** – THE PERMITTEE MUST AT LEAST TWO (2) WORKING DAYS BEFORE THE START OF CONSTRUCTION NOTIFY THE NYC FIRE DEPARTMENT, NYC POLICE DEPARTMENT, NYCEMS, LOCAL COMMUNITY BOARD, BOROUGH PRESIDENT'S OFFICE-CHIEF ENGINEER, NYCDOT OCMC OFFICE, AND ALL ABUTTING PROPERTY OWNERS.

O. **CONSTRUCTION INFORMATIONAL SIGNS** – THIS PROJECT REQUIRES A CONSTRUCTION PROJECT INFORMATIONAL SIGN (CPIS) IN ACCORDANCE WITH NYCDOT HIGHWAY RULE SECTION 2-02 (4) AND (5). CRITERIA AND A PROTOTYPE FOR THIS SIGN MAY BE FOUND ON THE NYCDOT WEBSITE AT:

HTTP://WWW.NYC.GOV/HTML/DOT/DOWNLOADS/PDF/DOT_CPIS_DIRECTIONS.PDF

P. **ENHANCED MITIGATIONS**

- **ENHANCED MITIGATIONS FOR PEDESTRIAN FLOW**, INCLUDING METAL FENCING, SHALL BE PROVIDED TO ENSURE PEDESTRIANS STAY WITHIN THEIR DESIGNATED PATH/ROUTE. PEDESTRIAN MANAGERS SHALL BE PROVIDED TO ASSIST WITH PEDESTRIANS AT THE DESIGNATED CROSSWALK AREAS.
- **"NO STANDING ANYTIME-TEMPORARY CONSTRUCTION" SIGNS** AND TEMPORARY PAVEMENT MARKINGS SHALL BE INSTALLED AND MAINTAINED AS WARRANTED BY THE MAINTENANCE AND PROTECTION OF TRAFFIC (MPT) REQUIRED TO FACILITATE TRAFFIC MOVEMENTS THROUGH THE WORK ZONE. ALL TEMPORARY SIGNS AND PAVEMENT MARKINGS SHALL BE REMOVED UPON COMPLETION OF THE PROJECT.
- **COMMUNITY OUTREACH** SHALL BE PROVIDED FOR THE DURATION OF THE PROJECT.

II. MAINTENANCE AND PROTECTION OF TRAFFIC

STIPULATIONS FOR PROJECT CONSTRUCTION ACTIVITIES

REGULATORS M-22 AND M-23 JACKSON STREET, STAGE 1 AND STAGE 3

A. JACKSON STREET BETWEEN SOUTH STREET AND WATER STREET

1. Work hours shall be as follows: 7AM to 4PM Monday to Friday and 8AM to 6PM Saturday.
2. The contractor must maintain a min one 12 foot lane for traffic at all times during this stage. Work zone to be set along Jackson Street on the East side of the street.
3. Must coordinate with Parks Department the continuation of pedestrian traffic on Corlears Hook Park's jurisdiction.
4. The contractor shall secure adequate vehicle turning radius for traffic around the work zone for design vehicles: SU-30 Truck, School Bus, Fire Truck.
5. No temporary pedestrian crosswalk shall be installed without NYCDOT OCMC-Streets further evaluation and approval. This evaluation will be based on location factors and case-by case.
6. No simultaneous work zones in other blocks nearby will be allowed, other than on Jackson Street.

B. INTERSECTION OF JACKSON STREET AT WATER STREET
INTERSECTION OF JACKSON STREET AT SOUTH STREET

1. Work hours shall be as follows: 7AM to 4PM Monday to Friday and 8AM to 6PM Saturday.
2. The contractor must maintain a min of one 12 foot lane on Jackson Street at all times during this stage. Work zone to be set along Jackson Street on the East side of the street.
3. No impact on Water Street or South Street, respectively.
4. The contractor shall secure adequate vehicle turning radius for traffic at each intersection. Design vehicles: SU-30 Truck, School Bus, Fire Truck.

REGULATORS M-22 AND M-23 JACKSON STREET, STAGE 2

C. JACKSON STREET BETWEEN SOUTH STREET AND WATER STREET

1. Work hours shall be as follows: 7AM to 4PM Monday to Friday and 8AM to 6PM Saturday.
2. The contractor might be allowed to full close Jackson Street during Stage 2. However, a full roadway closure during work hours or a 24/7 full roadway closure request must be submitted in advance and justified in order for it to be evaluated and approved. Any approval will be determined on a case-by-case basis. The contractor must notify NYCDOT OCMC-Streets about the street full closure start date, proposed work duration and must comply with the NYCDOT Full Roadway Closure Request procedure.
3. The Community Board and Emergency Responders must be notified at least 7 days in advance about the full roadway closure, as per the NYCDOT OCMC-Streets procedure. The contractor must apply for the formal roadway closure request and comply with NYCDOT OCMC-Streets procedure.
4. Traffic on Jackson Street must be notified in advance about the full roadway closure on Jackson Street between South Street and Water Street as early as prior the intersection between Jackson Street and

Madison Street; only local southbound traffic should be allowed. Potential U-turning traffic must be mitigated with MPT strategies and flagmen. If this situation occurs, the contractor must notify the NYCDOT for further evaluation.

5. Traffic on Cherry Street and on Water Street must be notified in advance about the full roadway closure in Jackson Street.
6. Sidewalk on the East side of the street will be fully closed and occupied as part of the work zone. Coordinate with Parks Department the continuation of pedestrian traffic on Corlears Hook Park's jurisdiction.
7. Must provide certified flaggers to manage pedestrian traffic during work hours.
8. No temporary pedestrian crosswalk shall be installed without NYCDOT OCMC-Streets further evaluation and approval. This evaluation will be based on location factors and case-by case.
9. Sidewalk on the West side of the street shall remain open during this stage.
10. Implement detour plan during full roadway closure.
11. No simultaneous work zones in other blocks nearby will be allowed, other than on Jackson Street.

REGULATORS M-22 AND M-23 WATER STREET, STAGE 1

D. WATER STREET BETWEEN JACKSON STREET AND GOUVERNEUR SLIP EAST

1. Work hours shall be as follows: 7AM to 4PM Monday to Friday and 8AM to 6PM Saturday.
2. The contractor must maintain a min one 12 foot lane for traffic along the work zone at all times. The travel lane will be measured from the South curb line while the work zone will occupy the North side of the street during this stage.
3. Work zone must not exceed the maximum longitude of 250 feet. The contractor must work in phases, if necessary, in order to complete work on block as per maximum work zone longitude.
4. A minimum of 5 feet width of the sidewalk, clear of obstructions, must be maintained along the work zone at all times. Lighting must be provided along the temporary pedestrian walkway path during nighttime conditions. No impact on sidewalk on the South side of the street during this stage.
5. The contractor shall secure adequate vehicle turning radius for traffic around the work zone for design vehicles: SU-30 Truck, School Bus, Fire Truck.
6. No temporary pedestrian crosswalk shall be installed without NYCDOT OCMC-Streets further evaluation and approval. This evaluation will be based on location factors and case-by case.

E. INTERSECTION OF WATER STREET AT JACKSON STREET

1. Work hours shall be as follows: 7AM to 4PM Monday to Friday and 8AM to 6PM Saturday.
2. A minimum one 12 foot lane for two-way traffic must be provided on Jackson Street North approach while no impact on Jackson Street South approach. Also, must provide a minimum 12 foot lane on Water Street during work hours.
3. The contractor must provide certified flaggers to assist traffic through the one lane for two-way traffic during work hours. The intersection must be steel plated and reopened after work hours.
4. Certified flaggers must be provided to assist pedestrian traffic during work hours and while occupying the pedestrian crosswalk. Must clear and reopen pedestrian crosswalk after work hours.
5. The contractor shall secure adequate vehicle turning radius for traffic around the work zone for design vehicles: SU-30 Truck, School Bus, Fire Truck.
6. No temporary pedestrian crosswalk shall be installed without NYCDOT OCMC-Streets further evaluation and approval. This evaluation will be based on location factors and case-by case.

REGULATORS M-22 AND M-23 WATER STREET, STAGE 2

F. INTERSECTION OF WATER STREET AT GOUVERNEUR SLIP EAST

1. Work hours shall be as follows: 7AM to 4PM Monday to Friday and 8AM to 6PM Saturday.
2. The contractor must maintain a min one 12-foot lane for traffic along the work zone during work hours on Water Street. Gouverneur Slip East to be fully closed during work hours. The intersection must be steel plated and reopened after work hours.
3. Provide certified flaggers to assist pedestrians during work hours due to work zone impact on crosswalk. Must reopen crosswalk after work hours.

4. The Community Board and Emergency Responders must be notified at least 7 days in advance about the full roadway closure, as per the NYCDOT OCMC-Streets procedure. The contractor must apply for the formal full roadway closure request and comply with NYCDOT OCMC-Streets procedure.

G. WATER STREET BETWEEN GOUVERNEUR STREET AND GOUVERNEUR SLIP EAST

1. Work hours shall be as follows: 7AM to 4PM Monday to Friday and 8AM to 6PM Saturday.
2. The contractor must maintain a min one 12 foot lane for traffic along the work zone at all times. The travel lane will be measured from the North curb line while the work zone will occupy the South side of the street during this stage.
3. Sidewalk to remain open for pedestrian traffic at all times.

H. WATER STREET BETWEEN JACKSON STREET AND GOUVERNEUR SLIP EAST

1. Work hours shall be as follows: 7AM to 4PM Monday to Friday and 8AM to 6PM Saturday.
2. The contractor must maintain a min one 12 foot lane for traffic along the work zone during work hours. The travel lane will be measured from the North curb line while the work zone will occupy the South side of the street during this stage.
3. Sidewalk to remain open for pedestrian traffic at all times.

REGULATORS M-22 AND M-23 WATER STREET, STAGE 3

I. WATER STREET BETWEEN JACKSON STREET AND GOUVERNEUR SLIP EAST

1. Work hours shall be as follows: 7AM to 4PM Monday to Friday and 8AM to 6PM Saturday.
2. The contractor must maintain a min one 12 foot lane for traffic on the North side of the street and along the work zone at all times. The travel lane measure will be taken from the North curb line and into the roadway while the work zone will occupy the remaining roadway section during this stage.
3. A minimum of 5 feet width of the South sidewalk, clear of obstructions, must be maintained along the work zone at all times. Lighting must be provided along the temporary pedestrian path during nighttime conditions. No impact on sidewalk on the North side of the street during this stage.
4. Must coordinate with the Sacred Heart Convent about the driveway access in and out their property.
5. The contractor shall secure adequate vehicle turning radius for traffic around the work zone for design vehicles: SU-30 Truck, School Bus, Fire Truck.
6. No temporary pedestrian crosswalk shall be installed without NYCDOT OCMC-Streets further evaluation and approval. This evaluation will be based on location factors and case-by case.

J. INTERSECTION OF WATER STREET AT JACKSON STREET

1. Work hours shall be as follows: 7AM to 4PM Monday to Friday and 8AM to 6PM Saturday.
2. Must provide a minimum 12 foot lane at all times on the South approach of Jackson Street while two 12-foot lanes must be provided on the North approach of Jackson Street.
3. Certified flaggers must be provided to assist pedestrian traffic during work hours and while occupying the pedestrian crosswalk. Must clear and reopen pedestrian crosswalk after work hours.
4. The contractor shall secure adequate vehicle turning radius for traffic around the work zone for design vehicles: SU-30 Truck, School Bus, Fire Truck.
5. No temporary pedestrian crosswalk shall be installed without NYCDOT OCMC-Streets further evaluation and approval. This evaluation will be based on location factors and case-by case.

K. JACKSON STREET BETWEEN SOUTH STREET AND WATER STREET

1. Work hours shall be as follows: 7AM to 4PM Monday to Friday and 8AM to 6PM Saturday.
2. Must provide a minimum 12 foot lane at all times on Jackson Street.
3. A minimum of 5 feet width of the West sidewalk, clear of obstructions, must be maintained along the work zone at all times. Lighting must be provided along the temporary pedestrian path during nighttime conditions. No impact on sidewalk on the West side of the street during this stage.
4. The contractor shall secure adequate vehicle turning radius for traffic around the work zone for design vehicles: SU-30 Truck, School Bus, Fire Truck.
5. No temporary pedestrian crosswalk shall be installed without NYCDOT OCMC-Streets further evaluation and approval. This evaluation will be based on location factors and case-by case.

REGULATORS M-22 AND M-23 WATER STREET, STAGE 4

L. WATER STREET BETWEEN JACKSON STREET AND GOUVERNEUR SLIP EAST

1. Work hours shall be as follows: 7AM to 4PM Monday to Friday and 8AM to 6PM Saturday.
2. The contractor will be allowed the full roadway closure of Water Street during Stage 4. However, a full roadway closure during work hours or a 24/7 full roadway closure request must be submitted in advance and must provide all relevant details to justify in order for it to be evaluated and approved.
3. Any full roadway closure approval will be determined on a case-by-case basis. The contractor must notify NYCDOT OCMC-Streets about the street full closure start date, proposed work duration and must comply with the NYCDOT Full Roadway Closure Request procedure.
4. Provide a minimum 12 foot lane for traffic after work hours in normal working hour's full roadway closures.
5. Specific stipulations for the 24/7 full roadway closures, if any, to be given by NYCDOT OCMC-Streets during the full roadway closure request evaluation and approval procedure.
6. The Community Board and Emergency Responders must be notified at least 7 days in advance about the full roadway closure, as per the NYCDOT OCMC-Streets procedure.
7. The work zone longitude must not exceed 250 linear feet. The contractor must work in phases, if necessary, in order to complete work on block as per maximum work zone longitude.
8. No impact on sidewalks during this stage; work on roadway.
9. Must coordinate with NYC Housing Vladeck Houses and with the sacred Heart Convent due to impact on driveway in and out their property.

REGULATORS M-22 AND M-23 GOUVERNEUR SLIP EAST, STAGE 1

M. GOUVERNEUR SLIP EAST BETWEEN SOUTH STREET AND WATER STREET

1. Work hours shall be as follows: 7AM to 4PM Monday to Friday and 8AM to 6PM Saturday.
2. The contractor will be allowed to full roadway closure of Gouverneur Slip East during Stage 1. However, a full roadway closure during work hours or a 24/7 full roadway closure request must be submitted in advance and must provide all relevant details to justify in order for it to be evaluated and approved.
3. Any full roadway closure approval will be determined on a case-by-case basis. The contractor must notify NYCDOT OCMC-Streets about the street full closure start date, proposed work duration and must comply with the NYCDOT Full Roadway Closure Request procedure.
4. Provide a minimum 12 foot lane for traffic after work hours in normal working hour's full roadway closures.
5. Specific stipulations for the 24/7 full roadway closures, if any, to be given by NYCDOT OCMC-Streets during the full roadway closure request evaluation and approval procedure.
6. The Community Board and Emergency Responders must be notified at least 7 days in advance about the full roadway closure, as per the NYCDOT OCMC-Streets procedure.
7. No impact on sidewalks during this stage; work on roadway.
8. Must provide certified flaggers to assist pedestrians on crosswalks and along pedestrian detour during work hours. Must work on one crosswalk at a time; no simultaneous crosswalks occupancy.
9. Must reopen both crosswalks after work hours for pedestrian use.
10. Must coordinate with private parking lot on block prior to mobilizing. Must coordinate with them throughout the duration of construction activity on this block.

N. INTERSECTION OF GOUVERNEUR SLIP EAST AT SOUTH STREET

1. Work hours shall be as follows: 7AM to 4PM Monday to Friday and 8AM to 6PM Saturday.
2. Must provide a minimum 12 foot lane on South Street and a full roadway closure on Gouverneur Slip East during work hours. After work hours, the contractor must clear the intersection.
3. Must provide certified flaggers to assist pedestrians on crosswalks and along pedestrian detour during work hours. Must reopen the crosswalk after work hours for pedestrian use.
4. Construction activity must not create vehicular queue in South Street and into the FRD Drive Exit lane that allows access into South Street. Please consider and put in place all mitigation measures possible each time material and equipment enter or exit the work zone.

REGULATORS M-22 AND M-23 GOUVERNEUR SLIP EAST, STAGE 2

O. INTERSECTION OF GOUVERNEUR SLIP EAST AT SOUTH STREET

1. Work hours shall be as follows: 7AM to 4PM Monday to Friday and 8AM to 6PM Saturday.

2. Must provide a minimum 12 foot lane on South Street during work hours. After work hours, the contractor must clear the intersection.
3. The contractor shall provide adequate vehicle turning radius for traffic from Gouverneur Slip East into South Street. Design vehicles: SU-30 Truck, School Bus, Fire Truck.
4. No impact on crosswalk during this stage.
5. Construction activity must not create vehicular queue in South Street and into the FRD Drive Exit lane that allows access to South Street. Please consider and put in place all mitigation measures possible each time material and equipment enter or exit the work zone.

REGULATORS M-22 AND M-23 GOUVERNEUR SLIP EAST, STAGE 3

P. GOUVERNEUR SLIP EAST BETWEEN SOUTH STREET AND WATER STREET

1. Work hours shall be as follows: 7AM to 4PM Monday to Friday and 8AM to 6PM Saturday.
2. The contractor must maintain a minimum of one 12 foot lane for traffic at all times.
3. Must provide a protected minimum 5 feet pedestrian walkway on the roadway during this stage.
4. Coordinate with parking lot due to possible impact on gated access on block.
5. The contractor shall secure adequate vehicle turning radius for traffic around the work zone for design vehicles: SU-30 Truck, School Bus, Fire Truck.

Q. INTERSECTION OF GOUVERNEUR SLIP EAST AT WATER STREET

1. Work hours shall be as follows: 7AM to 4PM Monday to Friday and 8AM to 6PM Saturday.
2. Must provide a minimum 12 foot lane on Gouverneur Slip East and a minimum 12 foot lane on Water Street.
3. Must provide certified flaggers to assist pedestrians on crosswalks and along the protected pedestrian walkway during work hours. Must reopen the crosswalk after work hours for pedestrian use.
4. The contractor shall secure adequate vehicle turning radius for traffic around the work zone for design vehicles: SU-30 Truck, School Bus, Fire Truck.

R. WATER STREET BETWEEN GOUVERNEUR SLIP EAST AND JACKSON STREET

1. Work hours shall be as follows: 7AM to 4PM Monday to Friday and 8AM to 6PM Saturday.
2. Must provide a minimum 12 foot lane on Gouverneur Slip East and a minimum 12 foot lane on Water Street.
3. Must provide a protected minimum 5 feet pedestrian walkway on the roadway during this stage.

REGULATORS M-22 AND M-23 GOUVERNEUR SLIP EAST, STAGE 4

S. GOUVERNEUR SLIP EAST BETWEEN SOUTH STREET AND WATER STREET

1. Work hours shall be as follows: 7AM to 4PM Monday to Friday and 8AM to 6PM Saturday.
2. The contractor will be allowed to full roadway closure of Gouverneur Slip East during Stage 4. However, a full roadway closure during work hours or a 24/7 full roadway closure request must be submitted in advance and must provide all relevant details to justify in order for it to be evaluated and approved.
3. Any full roadway closure approval will be determined on a case-by-case basis. The contractor must notify NYCDOT OCMC-Streets about the street full closure start date, proposed work duration and must comply with the NYCDOT Full Roadway Closure Request procedure.
4. Specific stipulations for the 24/7 full roadway closures, if any, to be given by NYCDOT OCMC-Streets during the full roadway closure request evaluation and approval procedure.
5. The Community Board and Emergency Responders must be notified at least 7 days in advance about the full roadway closure, as per the NYCDOT OCMC-Streets procedure.
6. Must provide a minimum 5 feet on the east sidewalk for pedestrians during this stage; no impact on the West sidewalk.
7. Must coordinate with the building and the private parking lot prior to mobilizing.
8. Pedestrian crosswalk on the North side of the street will be closed during this stage. However, a minimum 5 feet wide and protected pedestrian walkway on the roadway shall be in place at all times while the

crosswalk is occupied as part of the work zone. Pedestrian crosswalk on the South side of the street to remain open and unobstructed at all times during this stage.

REGULATOR M-27, STAGE 1

T. LEWIS STREET BETWEEN DELANCEY STREET AND GRAND STREET

1. Work hours shall be as follows: 7AM to 4PM Monday to Friday and 8AM to 6PM Saturday.
2. The contractor must maintain a minimum one 11 foot lane northbound and a minimum 12 foot lane southbound at all times.
3. No impact on the 18 feet wide parking lane adjacent to the West curb line; authorized parking for school personnel. The work zone must not impede the turning maneuvers in and out of the parking spots.
4. A minimum 5 feet wide and protected pedestrian walkway on the roadway shall be in place at all times while the sidewalk is occupied as part of the work zone.
5. Occupy remaining width of the roadway section on the East side of the street as work zone, including the full width of the East sidewalk.
6. Must coordinate with the school and with any ongoing construction prior to mobilizing.

REGULATOR M-27, STAGE 2

U. LEWIS STREET BETWEEN DELANCEY STREET AND GRAND STREET

1. Work hours shall be as follows: 7AM to 4PM Monday to Friday and 8AM to 6PM Saturday.
2. The contractor must maintain a minimum one 11 foot lane northbound and a minimum 18-foot lane southbound at all times.
3. No impact on the 18 feet wide parking lane adjacent to the West curb line; authorized parking for school personnel. The work zone must not impede the turning maneuvers in and out of the parking spots.
4. Provide certified flaggers to assist pedestrians during work hours due to work zone impact on crosswalk. Must reopen crosswalk after work hours.
5. East sidewalk to remain fully open for use during this stage.
6. Must coordinate with the school and with any ongoing construction prior to mobilizing.

V. INTERSECTION OF LEWIS STREET AT DELANCEY STREET SOUTH

1. Work hours shall be as follows: 7AM to 4PM Monday to Friday and 8AM to 6PM Saturday.
2. The contractor must maintain a minimum one 11 foot lane northbound and a minimum 18 foot lane southbound on Lewis Street.
3. The contractor must maintain a minimum of 26 feet width of the roadway section adjacent to the North curb line on Delancey Street South.
4. The temporary removal of parking after the intersection on Delancey Street South will be allowed in order to accommodate a minimum 11 foot lane for uninterrupted traffic flow. The removal of existing pavement markings and the installation of temporary pavement markings prior and after the intersection is required to assist traffic along the work zone.
5. The contractor shall secure adequate vehicle turning radius for traffic around the work zone for design vehicles: SU-30 Truck, School Bus, Fire Truck.
6. Provide certified flaggers to assist pedestrians during work hours due to work zone impact on crosswalk. Must reopen crosswalk after work hours.
7. Must coordinate with the school and with any ongoing construction prior to mobilizing.

W. DELANCEY STREET SOUTH BETWEEN LEWIS STREET AND BARUCH DRIVE

1. Work hours shall be as follows: 7AM to 4PM Monday to Friday and 8AM to 6PM Saturday.
2. The contractor must maintain a minimum of 26 feet width of the roadway section adjacent to the East curb line.
3. The temporary removal of parking will be allowed in order to accommodate a minimum 11 foot lane for uninterrupted traffic flow. The removal of existing pavement markings and the installation of temporary pavement markings is required to assist traffic along the work zone.
4. The contractor shall secure adequate vehicle turning radius for traffic around the work zone for design vehicles: SU-30 Truck, School Bus, Fire Truck.
5. Shall not fence the work zone at the intersection, use barriers only to allow for sight view between driver and pedestrian; avoid blind spot.
6. Provide certified flaggers to assist pedestrians during work hours due to work zone impact on crosswalk.

X. DELANCEY STREET SOUTH BETWEEN LEWIS STREET AND CANNON STREET

1. Work hours shall be as follows: 7AM to 4PM Monday to Friday and 8AM to 6PM Saturday.
2. Install barriers to shift traffic entering the work zone. No impact on parking spots at this block.

REGULATOR M-27, STAGE 3

Y. DELANCEY STREET SOUTH BETWEEN LEWIS STREET AND BARUCH DRIVE

1. Work hours shall be as follows: 7AM to 4PM Monday to Friday and 8AM to 6PM Saturday.
2. The contractor must maintain a minimum of 26 feet width of the roadway section adjacent to the North curb line. The temporary removal of parking on both sides of the street will be allowed in order to accommodate a minimum 11 foot lane for uninterrupted traffic flow on the North side of the street and the work zone on the South side of the street.
3. The removal of existing pavement markings and the installation of temporary pavement markings is required to assist traffic along the work zone.
4. Work zone to run along the entire block during this stage.
5. The contractor shall secure adequate vehicle turning radius for traffic around the work zone for design vehicles: SU-30 Truck, School Bus, Fire Truck.
6. Provide certified flaggers to assist pedestrians during work hours due to work zone impact on crosswalk. Must reopen crosswalk after work hours.
7. No sidewalk impact on neither side of the street during this stage.
8. Must not impact access to private driveways. Provide adequate turning radius based on critical vehicles entering and exiting private driveway. Coordinate with building representative prior to mobilizing.

REGULATOR M-27, STAGE 4

Z. DELANCEY STREET SOUTH BETWEEN LEWIS STREET AND BARUCH DRIVE

1. Work hours shall be as follows: 7AM to 4PM Monday to Friday and 8AM to 6PM Saturday.
2. The contractor must maintain a minimum of 22 feet width of the roadway adjacent to the North curb line.
3. The temporary removal of parking on both sides of the street will be allowed in order to accommodate a minimum 11 foot lane for uninterrupted traffic flow. The removal of existing pavement markings and the installation of temporary pavement markings is required to assist traffic along the work zone.
4. The contractor must restore some of the parking spots and original pavement markings on the North side of the street.
5. Provide certified flaggers to assist pedestrians during work hours due to work zone impact on crosswalk. Must reopen crosswalk after work hours.
6. Must not impact access to private driveways. Provide adequate turning radius based on critical vehicles entering and exiting private driveway.

AA. INTERSECTION OF DELANCEY STREET SOUTH AT BARUCH DRIVE

1. Work hours shall be as follows: 7AM to 4PM Monday to Friday and 8AM to 6PM Saturday.
2. The contractor must maintain a minimum of 22 feet width of the roadway adjacent to the North curb line.
3. The temporary removal of parking on both sides of the street will be allowed in order to accommodate a minimum 11 foot lane for uninterrupted traffic flow. The removal of existing pavement markings and the installation of temporary pavement markings before and after the intersection is required to assist traffic along the work zone.
4. No impact on Baruch Drive approach of the intersection.
5. Must coordinate with the East River Parking lot prior to mobilizing.

BB. DELANCEY STREET SOUTH BETWEEN BARUCH DRIVE AND MANGIN STREET

1. Work hours shall be as follows: 7AM to 4PM Monday to Friday and 8AM to 6PM Saturday.
2. The contractor must maintain a minimum of 22 feet width of the roadway adjacent to the North curb line.
3. The temporary removal of parking will be allowed in order to accommodate a minimum 11 foot lane for uninterrupted traffic flow. The removal of existing pavement markings and the installation of temporary pavement markings is required to assist traffic along the work zone.

REGULATOR M-27, STAGE 5

CC. DELANCEY STREET SOUTH BETWEEN LEWIS STREET AND BARUCH DRIVE

1. Work hours shall be as follows: 7AM to 4PM Monday to Friday and 8AM to 6PM Saturday.
2. The contractor must maintain a minimum of 26 feet width of the roadway section adjacent to the South curb line.
3. The temporary removal of parking on both sides of the street will be allowed in order to accommodate a minimum 11 foot lane for uninterrupted traffic flow. The removal of existing pavement markings and the installation of temporary pavement markings is required to assist traffic along the work zone.
4. Provide certified flaggers to assist pedestrians during work hours due to work zone impact on crosswalk. Must reopen crosswalk after work hours.
5. Must coordinate with the East River Parking lot prior to mobilizing.

DD. INTERSECTION OF DELANCEY STREET SOUTH AT BARUCH DRIVE

1. Work hours shall be as follows: 7AM to 4PM Monday to Friday and 8AM to 6PM Saturday.
2. The contractor must maintain a minimum of 26 feet width of the roadway section adjacent to the South curb line.
3. The temporary removal of parking on both sides of the street will be allowed in order to accommodate a minimum 11 foot lane for uninterrupted traffic flow. The removal of existing pavement markings and the installation of temporary pavement markings before and after the intersection is required to assist traffic along the work zone.
4. Provide certified flaggers to assist pedestrians during work hours due to work zone impact on crosswalk. Must reopen crosswalk after work hours.
5. Must coordinate with the East River Parking lot prior to mobilizing.

REGULATOR M-28, STAGE 1

EE. DELANCEY STREET NORTH BETWEEN LEWIS STREET AND BARUCH DRIVE

1. Work hours shall be as follows: 7AM to 4PM Monday to Friday and 8AM to 6PM Saturday.
2. The contractor is allowed to occupy up to 30 feet of the roadway section adjacent to the North curb line. Must maintain a minimum 12 foot lane for traffic at all times.
3. The temporary removal of parking on both sides of the street will be allowed in order to maintain the uninterrupted traffic flow around the work zone. The removal of existing pavement markings and the installation of temporary pavement markings is required to assist traffic along the work zone.
4. The contractor shall secure adequate vehicle turning radius for traffic around the work zone for design vehicles: SU-30 Truck, School Bus, Fire Truck.
5. Sidewalk to remain open on both sides of the street at all times. Provide certified flaggers to assist pedestrians during work hours.
6. No temporary pedestrian crosswalk or mid-block crosswalk at the end of the work zone shall be installed without NYCDOT OCMC-Streets further evaluation and approval. This evaluation will be based on location factors and case-by case.

FF. INTERSECTION OF DELANCEY STREET NORTH AT BARUCH DRIVE

1. Work hours shall be as follows: 7AM to 4PM Monday to Friday and 8AM to 6PM Saturday.
2. Traffic delineators are allowed as part of the work zone MPT; no work at the intersection.
3. The temporary removal of parking on both sides of the street will be allowed in order to maintain the uninterrupted traffic flow around the work zone. The removal of existing pavement markings and the installation of temporary pavement markings is required to assist traffic along the work zone.
4. The removal of existing pavement markings and the installation of temporary pavement markings before and after the intersection is required to assist traffic along the work zone.
5. The contractor shall secure adequate vehicle turning radius for traffic around the work zone for design vehicles: SU-30 Truck, School Bus, Fire Truck.
6. Sidewalk to remain open on both sides of the street at all times. The pedestrian crossing at the intersection will remain open at all times. Provide certified flaggers to assist pedestrians during work hours.

7. No temporary pedestrian crosswalk or mid-block crosswalk at the end of the work zone shall be installed without NYCDOT OCMC-Streets further evaluation and approval. This evaluation will be based on location factors and case-by case.

GG. DELANCEY STREET SOUTH BETWEEN BARUCH DRIVE AND MANGIN STREET

1. Work hours shall be as follows: 7AM to 4PM Monday to Friday and 8AM to 6PM Saturday.
2. Traffic delineators are allowed as part of the work zone MPT; no work on this block.
3. The temporary removal of parking on both sides of the street will be allowed in order to maintain the uninterrupted traffic flow around the work zone. The removal of existing pavement markings and the installation of temporary pavement markings is required to assist traffic along the work zone.
4. Sidewalk to remain open on both sides of the street at all times. The only pedestrian crossing at the intersection will remain open at all times during this stage.
5. No temporary pedestrian crosswalk or mid-block crosswalk at the end of the work zone shall be installed without NYCDOT OCMC-Streets further evaluation and approval. This evaluation will be based on location factors and case-by case.

REGULATOR M-28, STAGE 2

HH. DELANCEY STREET NORTH BETWEEN LEWIS STREET AND BARUCH DRIVE

1. Work hours shall be as follows: 7AM to 4PM Monday to Friday and 8AM to 6PM Saturday.
2. The contractor is allowed to occupy up to 30 feet of the roadway section adjacent to the South curb line. Must maintain a minimum 12 foot lane for traffic at all times.
3. The temporary removal of parking on both sides of the street will be allowed in order to maintain the uninterrupted traffic flow around the work zone. The removal of existing pavement markings and the installation of temporary pavement markings is required to assist traffic along the work zone.
4. The contractor shall secure adequate vehicle turning radius for traffic around the work zone for design vehicles: SU-30 Truck, School Bus, Fire Truck.
5. Provide certified flaggers to assist pedestrians during work hours due to work zone impact on crosswalk. Must reopen crosswalk after work hours.

II. INTERSECTION OF DELANCEY STREET NORTH AT BARUCH DRIVE

1. Work hours shall be as follows: 7AM to 4PM Monday to Friday and 8AM to 6PM Saturday.
2. The contractor is allowed to occupy up to 30 feet of the roadway section adjacent to the South curb line on Delancey Street North. Must maintain a minimum 12 foot lane for traffic at all times.
3. Must maintain a minimum of one 11 foot lane on Baruch Drive at all times.
4. The temporary removal of parking on both sides of the street will be allowed in order to maintain the uninterrupted traffic flow around the work zone. The removal of existing pavement markings and the installation of temporary pavement markings is required to assist traffic along the work zone.
5. Provide certified flaggers to assist pedestrians during work hours due to work zone impact on crosswalk. Must reopen crosswalk after work hours.
6. The contractor shall secure adequate vehicle turning radius for traffic around the work zone for design vehicles: SU-30 Truck, School Bus, Fire Truck.
7. No temporary pedestrian crosswalk or mid-block crosswalk at the end of the work zone shall be installed without NYCDOT OCMC-Streets further evaluation and approval. This evaluation will be based on location factors and case-by case.

JJ. BARUCH DRIVE BETWEEN DELANCEY STREET NORTH AND DELANCEY STREET SOUTH

1. Work hours shall be as follows: 7AM to 4PM Monday to Friday and 8AM to 6PM Saturday.
2. Must provide a minimum 11 foot lane for traffic at all times during this stage. Lane to be measured from the South curb line.
3. The contractor shall secure adequate vehicle turning radius for traffic around the work zone for design vehicles: SU-30 Truck, School Bus, Fire Truck.
4. Must maintain a minimum 5 feet clear on the sidewalk for pedestrians on the West side of street. Provide certified flaggers during work hours. No impact on the South sidewalk.
5. Provide certified flaggers to assist pedestrians during work hours due to work zone impact on crosswalk. Must reopen crosswalk after work hours.

KK. DELANCEY STREET NORTH BETWEEN BARUCH DRIVE AND MANGIN STREET

1. Work hours shall be as follows: 7AM to 4PM Monday to Friday and 8AM to 6PM Saturday.
2. Traffic delineators are allowed as part of the work zone MPT; no work on this block.

REGULATOR M-28, STAGE 3

LL. INTERSECTION OF DELANCEY STREET NORTH AT BARUCH DRIVE

1. Work hours shall be as follows: 7AM to 4PM Monday to Friday and 8AM to 6PM Saturday.
2. The contractor is allowed to occupy up to 30 feet of the roadway section adjacent to the South curb line on Delancey Street North. Must maintain a minimum 12 foot lane for traffic at all times.
3. Must maintain a minimum of one 11 foot lane on Baruch Drive at all times.
4. The temporary removal of parking on both sides of the street will be allowed in order to maintain the uninterrupted traffic flow around the work zone. The removal of existing pavement markings and the installation of temporary pavement markings is required to assist traffic along the work zone.
5. The contractor shall secure adequate vehicle turning radius for traffic around the work zone for design vehicles: SU-30 Truck, School Bus, Fire Truck.
6. No temporary pedestrian crosswalk or mid-block crosswalk at the end of the work zone shall be installed without NYCDOT OCMC-Streets further evaluation and approval. This evaluation will be based on location factors and case-by case.

MM. DELANCEY STREET NORTH BETWEEN LEWIS STREET AND BARUCH DRIVE

1. Work hours shall be as follows: 7AM to 4PM Monday to Friday and 8AM to 6PM Saturday.
2. Traffic delineators are allowed as part of the work zone MPT; no work on this block.

NN. DELANCEY STREET NORTH BETWEEN BARUCH DRIVE AND MANGIN STREET

1. Work hours shall be as follows: 7AM to 4PM Monday to Friday and 8AM to 6PM Saturday.
2. Traffic delineators are allowed as part of the work zone MPT; no work on this block.

OO. BARUCH DRIVE BETWEEN DELANCEY STREET NORTH AND DELANCEY STREET SOUTH

1. Work hours shall be as follows: 7AM to 4PM Monday to Friday and 8AM to 6PM Saturday.
2. Traffic delineators are allowed as part of the work zone MPT; no work on this block.

REGULATOR M-28, STAGE 4

PP. DELANCEY STREET NORTH BETWEEN LEWIS STREET AND BARUCH DRIVE

1. Work hours shall be as follows: 7AM to 4PM Monday to Friday and 8AM to 6PM Saturday.
2. The contractor must occupy up to 44 feet width of the roadway section adjacent to the South curb line on Delancey Street North; must maintain a minimum 12 foot lane at all times.
3. The temporary removal of parking on both sides of the street will be allowed in order to maintain the uninterrupted traffic flow around the work zone. The removal of existing pavement markings and the installation of temporary pavement markings is required to assist traffic along the work zone.

QQ. INTERSECTION OF DELANCEY STREET NORTH AT BARUCH DRIVE

1. Work hours shall be as follows: 7AM to 4PM Monday to Friday and 8AM to 6PM Saturday.
2. The contractor might be allowed to full close Baruch Drive during Stage 4. However, a full roadway closure during work hours or a 24/7 full roadway closure request must be submitted in advance and justified in order for it to be evaluated and approved. Any approval will be determined on a case-by-case basis. The contractor must notify NYCDOT OCMC-Streets about the street full closure start date, proposed work duration and must comply with the NYCDOT Full Roadway Closure Request procedure.
3. The Community Board and Emergency Responders must be notified at least 7 days in advance about the full roadway closure, as per the NYCDOT OCMC-Streets procedure. The contractor must apply for the formal roadway closure request and comply with NYCDOT OCMC-Streets procedure.
4. The contractor must occupy up to 44 feet width of the roadway section adjacent to the South curb line on Delancey Street North; must maintain a minimum 12 foot lane at all times.

5. The temporary removal of parking on both sides of the street will be allowed in order to maintain the uninterrupted traffic flow around the work zone. The removal of existing pavement markings and the installation of temporary pavement markings is required to assist traffic along the work zone.
6. The contractor shall secure adequate vehicle turning radius for traffic around the work zone for design vehicles: SU-30 Truck, School Bus, Fire Truck.

RR. BARUCH DRIVE BETWEEN DELANCEY STREET NORTH AND DELANCEY STREET SOUTH

1. Work hours shall be as follows: 7AM to 4PM Monday to Friday and 8AM to 6PM Saturday.
2. The contractor might be allowed to full close Baruch Drive during Stage 4. However, a full roadway closure during work hours or a 24/7 full roadway closure request must be submitted in advance and justified in order for it to be evaluated and approved. Any approval will be determined on a case-by-case basis. The contractor must notify NYCDOT OCMC-Streets about the street full closure start date, proposed work duration and must comply with the NYCDOT Full Roadway Closure Request procedure.
3. The Community Board and Emergency Responders must be notified at least 7 days in advance about the full roadway closure, as per the NYCDOT OCMC-Streets procedure. The contractor must apply for the formal roadway closure request and comply with NYCDOT OCMC-Streets procedure.
4. No work on this block.

SS. DELANCEY STREET NORTH BETWEEN BARUCH DRIVE AND MANGIN STREET

1. Work hours shall be as follows: 7AM to 4PM Monday to Friday and 8AM to 6PM Saturday.
2. Traffic delineators are allowed as part of the work zone MPT; no work on this block.

REGULATOR M-31, STAGE 1

TT. COLUMBIA STREET NORTH BETWEEN EAST HOUSTON STREET AND RIVINGTON STREET

1. Work hours shall be as follows: 9AM to 2PM Monday to Friday, and 8AM to 6PM Saturday and Sunday.
2. The contractor must provide a minimum of two 11 foot lanes for two-way traffic at all times.
3. Must maintain a minimum of 5 feet for pedestrians on the sidewalk or on the roadway at all times.
4. Provide certified flaggers to assist pedestrians during work hours due to work zone impact on crosswalk. Must reopen crosswalk after work hours.
5. The contractor shall secure adequate vehicle turning radius for traffic around the work zone for design vehicles: SU-30 Truck, School Bus, Fire Truck.
6. Must coordinate with the school prior to mobilizing.

UU. COLUMBIA STREET NORTH BETWEEN EAST HOUSTON STREET AND RIVINGTON STREET

1. Work hours shall be as follows: 9AM to 2PM Monday to Friday, and 8AM to 6PM Saturday and Sunday.
2. The contractor must provide a minimum of two 11 foot lanes for two-way traffic at all times on Columbia Street. No impact on East Houston Street travel lanes, no impact on bike lane.
3. Must maintain a minimum of 5 feet for pedestrians on the sidewalk or on the roadway at all times.
4. Provide certified flaggers to assist pedestrians during work hours due to work zone impact on crosswalk. Must reopen crosswalk after work hours.
5. Must coordinate with NYCT Bus Operations prior to mobilizing.

VV. EAST HOUSTON STREET BETWEEN COLUMBIA STREET AND BARUCH DRIVE

1. Work hours shall be as follows: 9AM to 2PM Monday to Friday, and 8AM to 6PM Saturday and Sunday.
2. No impact on East Houston Street travel lanes, no impact on bike lane.
3. Must maintain a minimum of 5 feet for pedestrians on the sidewalk or on the roadway at all times.
4. Provide certified flaggers to assist pedestrians during work hours due to work zone impact on crosswalk. Must reopen crosswalk after work hours.
5. Must coordinate with NYCT Bus Operations prior to mobilizing due to impact on bus stop.

REGULATOR M-31, STAGE 2 AND STAGE 3

WW.EAST HOUSTON STREET BETWEEN COLUMBIA STREET AND BARUCH DRIVE

1. Work hours shall be as follows: 7AM to 4PM Monday to Friday and 8AM to 6PM Saturday.

2. The contractor must maintain a minimum of one 12 foot lane plus a minimum 5 foot temporary bike lane eastbound while no impact on the westbound of the roadway section.
3. Must maintain a minimum of 5 feet for pedestrians on the sidewalk.
4. No impact on bike lanes unless an approval is granted by the NYCDOT Bike Unit.
5. Must coordinate with NYCT Bus Operations prior to mobilizing due to impact on bus stop.
6. The contractor must coordinate with NYPD Traffic Operations; must provide one (1) Traffic Enforcement Agent (TEA) at this location from 7AM to 7PM Monday to Friday.

REGULATOR M-31, STAGE 4

XX. EAST HOUSTON STREET BETWEEN COLUMBIA STREET AND BARUCH DRIVE

1. Work hours shall be as follows: 7AM to 4PM Monday to Friday and 8AM to 6PM Saturday.
2. The contractor must maintain a minimum of one 12 foot lane plus a minimum 5 foot temporary bike lane eastbound while no impact on the westbound of the roadway section.
3. No impact on bike lanes unless an approval is granted by the NYCDOT Bike Unit.
4. Must coordinate with NYCT Bus Operations prior to mobilizing due to impact on bus stop.
5. The contractor must coordinate with NYPD Traffic Operations; must provide one (1) Traffic Enforcement Agent (TEA) at this location from 7AM to 7PM Monday to Friday.

REGULATOR M-37, STAGE 1

YY. AVENUE C BETWEEN EAST 18 STREET (AVENUE C LOOP) AND EAST 20 STREET

1. Work hours shall be as follows: 8AM to 8PM Saturday and Sunday. Any non-noisy operations related to roadway resurfacing and curing can be done from 8PM Saturday to 6AM Monday.
2. The contractor must maintain two 11 foot lanes; one northbound lane and one southbound shared lane (shared for thru traffic and into FDR Drive southbound).
3. Must provide a minimum of 5 feet on the sidewalk for pedestrians at all times.
4. No impact on bike lanes unless an approval is granted by the NYCDOT Bike Unit.
5. Must coordinate with NYCT Bus Operations prior to mobilizing due to impact on bus stop. Any excavation impacting the bus pad must be coordinated with NYCT. Restoration and resurfacing of the bus pad must comply with NYCT Specifications.
6. Provide certified flaggers to assist pedestrians during work hours due to work zone impact on crosswalk. Must reopen crosswalk after work hours.
7. The removal of existing pavement markings and the installation of temporary pavement markings is required to assist traffic along the work zone.
8. The contractor must coordinate with NYPD Traffic Operations; must provide one (1) Traffic Enforcement Agent (TEA) at this location from 8AM to 8PM Saturday and Sunday.

ZZ. INTERSECTION OF EAST 18 STREET (AVENUE C LOOP) AT AVENUE C

1. Work hours shall be as follows: 8AM to 8PM Saturday and Sunday. Any non-noisy operations related to roadway resurfacing and curing can be done from 8PM Saturday to 6AM Monday.
2. The contractor must maintain two 11 foot lanes; one northbound lane and one southbound shared lane (shared for thru traffic and into FDR Drive southbound).
3. No impact on East 18 Street roadway section during this stage.
4. No impact on bike lanes unless an approval is granted by the NYCDOT Bike Unit.
5. Must coordinate with NYCT Bus Operations prior to mobilizing due to impact on bus stop.
6. Provide certified flaggers to assist pedestrians during work hours due to work zone impact on crosswalk. Must reopen crosswalk after work hours.
7. The removal of existing pavement markings and the installation of temporary pavement markings is required to assist traffic along the work zone.
8. The contractor must coordinate with NYPD Traffic Operations; must provide one (1) Traffic Enforcement Agent (TEA) at this location from 8AM to 8PM Saturday and Sunday.

REGULATOR M-37, STAGE 2 AND STAGE 3

AAA. AVENUE C BETWEEN EAST 18 STREET (AVENUE C LOOP) AND EAST 20 STREET

1. Work hours shall be as follows: 8AM to 8PM Saturday and Sunday. Any non-noisy operations related to roadway resurfacing and curing can be done from 8PM Saturday to 6AM Monday.
2. The contractor must maintain two 11 foot lanes; one northbound lane and one southbound shared lane (shared for thru traffic and into FDR Drive southbound).
3. No impact on bike lanes unless an approval is granted by the NYCDOT Bike Unit.
4. Must coordinate with NYCT Bus Operations prior to mobilizing due to impact on bus stop. Any excavation impacting the bus pad must be coordinated with NYCT. Restoration and resurfacing of the bus pad must comply with NYCT Specifications.
5. Provide certified flaggers to assist pedestrians during work hours due to work zone impact on crosswalk. Must reopen crosswalk after work hours.
6. The contractor shall secure adequate vehicle turning radius for traffic around the work zone for design vehicles: SU-30 Truck, School Bus, Fire Truck.
7. The removal of existing pavement markings and the installation of temporary pavement markings is required to assist traffic along the work zone.
8. The contractor must coordinate with NYPD Traffic Operations; must provide one (1) Traffic Enforcement Agent (TEA) at this location from 8AM to 8PM Saturday and Sunday.

BBB. INTERSECTION OF EAST 18 STREET (AVENUE C LOOP) AT AVENUE C

1. Work hours shall be as follows: 8AM to 8PM Saturday and Sunday. Any non-noisy operations related to roadway resurfacing and curing can be done from 8PM Saturday to 6AM Monday.
2. The contractor must maintain two 11 foot lanes; one northbound lane and one southbound shared lane (shared for thru traffic and into FDR Drive southbound).
3. No impact on East 18 Street roadway section during this stage.
4. No impact on bike lanes unless an approval is granted by the NYCDOT Bike Unit.
5. Must coordinate with NYCT Bus Operations prior to mobilizing due to impact on bus stop. Any excavation impacting the bus pad must be coordinated with NYCT. Restoration and resurfacing of the bus pad must comply with NYCT Specifications.
6. Provide certified flaggers to assist pedestrians during work hours due to work zone impact on crosswalk. Must reopen crosswalk after work hours.
7. The contractor shall secure adequate vehicle turning radius for traffic around the work zone for design vehicles: SU-30 Truck, School Bus, Fire Truck.
8. The removal of existing pavement markings and the installation of temporary pavement markings is required to assist traffic along the work zone.
9. The contractor must coordinate with NYPD Traffic Operations; must provide one (1) Traffic Enforcement Agent (TEA) at this location from 8AM to 8PM Saturday and Sunday.

CCC. INTERSECTION OF AVENUE C AT FDR DRIVE EXIT 7

1. Work hours shall be as follows: 8AM to 8PM Saturday and Sunday. Any non-noisy operations related to roadway resurfacing and curing can be done from 8PM Saturday to 6AM Monday.
2. The contractor must maintain two 11 foot lanes; one northbound lane and one southbound shared lane (shared for thru traffic and into FDR Drive southbound).
3. The contractor must comply with stipulations from NYCDOT OCMC Highways for any impact on the FDR Drive or any potential traffic impact due to work on a local street.
4. No impact on bike lanes unless an approval is granted by the NYCDOT Bike Unit.
5. Must coordinate with NYCT Bus Operations prior to mobilizing due to impact on bus stop. Any excavation impacting the bus pad must be coordinated with NYCT. Restoration and resurfacing of the bus pad must comply with NYCT Specifications.
6. Provide certified flaggers to assist pedestrians during work hours due to work zone impact on crosswalk. Must reopen crosswalk after work hours.
7. The contractor shall secure adequate vehicle turning radius for traffic around the work zone for design vehicles: SU-30 Truck, School Bus, Fire Truck.
8. The removal of existing pavement markings and the installation of temporary pavement markings is required to assist traffic along the work zone.
9. The contractor must coordinate with NYPD Traffic Operations; must provide one (1) Traffic Enforcement Agent (TEA) at this location from 8AM to 8PM Saturday and Sunday.

DDD. AVENUE C BETWEEN EAST 18 STREET (AVENUE C LOOP) AND EAST 20 STREET

1. Work hours shall be as follows: 8AM to 8PM Saturday and Sunday. Any non-noisy operations related to roadway resurfacing and curing can be done from 8PM Saturday to 6AM Monday.
2. The contractor must maintain two 11 foot lanes; one northbound lane and one southbound shared lane (shared for thru traffic and into FDR Drive southbound).
3. Must provide a minimum of 5 feet on the sidewalk for pedestrians at all times.
4. No impact on bike lanes unless an approval is granted by the NYCDOT Bike Unit.
5. Must coordinate with NYCT Bus Operations prior to mobilizing due to impact on bus stop. Any excavation impacting the bus pad must be coordinated with NYCT. Restoration and resurfacing of the bus pad must comply with NYCT Specifications.
6. Provide certified flaggers to assist pedestrians during work hours due to work zone impact on crosswalk. Must reopen crosswalk after work hours.
7. The removal of existing pavement markings and the installation of temporary pavement markings is required to assist traffic along the work zone.
8. The contractor must coordinate with NYPD Traffic Operations; must provide one (1) Traffic Enforcement Agent (TEA) at this location from 8AM to 8PM Saturday and Sunday.

EEE. INTERSECTION OF EAST 18 STREET (AVENUE C LOOP) AT AVENUE C

1. Work hours shall be as follows: 8AM to 8PM Saturday and Sunday. Any non-noisy operations related to roadway resurfacing and curing can be done from 8PM Saturday to 6AM Monday.
2. The contractor must maintain two 11 foot lanes; one northbound lane and one southbound shared lane (shared for thru traffic and into FDR Drive southbound).
3. The contractor must maintain a minimum of one 11 foot lane on East 18 Street during this stage.
4. No impact on bike lanes unless an approval is granted by the NYCDOT Bike Unit.
5. Provide certified flaggers to assist pedestrians during work hours due to work zone impact on crosswalk. Must reopen crosswalk after work hours.
6. The removal of existing pavement markings and the installation of temporary pavement markings is required to assist traffic along the work zone.
7. The contractor shall secure adequate vehicle turning radius for traffic around the work zone for design vehicles: SU-30 Truck, School Bus, Fire Truck.
8. No temporary pedestrian crosswalk or mid-block crosswalk at the end of the work zone shall be installed without NYCDOT OCMC-Streets further evaluation and approval. This evaluation will be based on location factors and case-by case.
9. The contractor must coordinate with NYPD Traffic Operations; must provide one (1) Traffic Enforcement Agent (TEA) at this location from 8AM to 8PM Saturday and Sunday.

FFF. EAST 18 STREET (AVENUE C LOOP) BETWEEN AVENUE C AND BEND

1. Work hours shall be as follows: 8AM to 8PM Saturday and Sunday. Any non-noisy operations related to roadway resurfacing and curing can be done from 8PM Saturday to 6AM Monday.
2. The contractor must maintain a minimum of one 11 foot lane on East 18 Street during this stage.
3. Provide certified flaggers to assist pedestrians during work hours due to work zone impact on crosswalk. Must reopen crosswalk after work hours.
4. The contractor shall secure adequate vehicle turning radius for traffic around the work zone for design vehicles: SU-30 Truck, School Bus, Fire Truck.
5. No temporary pedestrian crosswalk or mid-block crosswalk at the end of the work zone shall be installed without NYCDOT OCMC-Streets further evaluation and approval. This evaluation will be based on location factors and case-by case.
6. The contractor must coordinate with NYPD Traffic Operations; must provide one (1) Traffic Enforcement Agent (TEA) at this location from 8AM to 8PM Saturday and Sunday.

N.I.G STORM SEWER RELOCATION

GGG. EAST 20 STREET BETWEEN AVENUE C AND STUYVESANT LOOP NORTH (20TH STREET LOOP)

1. Work hours shall be as follows: 7AM to 4PM Monday to Friday and 8AM to 6PM Saturday.
2. The contractor is allowed to occupy the width of the East 20 Street Service road at all times.
3. Must provide a minimum of 5 feet on the sidewalk for pedestrians at all times.
4. The contractor must coordinate with Stuy Town in order to maintain access to the building 24/7.

N.I.G 20" WATERMAIN RELOCATION

HHH. EAST 20 STREET BETWEEN AVENUE C AND STUYVESANT LOOP NORTH (20TH STREET LOOP)

1. Work hours shall be as follows: 7AM to 4PM Monday to Friday and 8AM to 6PM Saturday.
2. The contractor must maintain a minimum of two 11 foot lanes at all times, one lane on each direction.
3. Service road to remain fully open.
4. Must coordinate with NYCDOT Bike Unit prior to mobilizing due to impact on the two-way dedicated bike lane.
5. Must coordinate with NYCT Bus Operations prior to mobilizing due to impact on bus stop.
6. The contractor shall secure adequate vehicle turning radius for traffic around the work zone for design vehicles: SU-30 Truck, School Bus, Fire Truck.
7. The removal of existing pavement markings and the installation of temporary pavement markings is required to assist traffic along the work zone.

N.I.G CHAMBER CONSTRUCTION

III. EAST 20 STREET BETWEEN AVENUE C AND STUYVESANT LOOP NORTH (20TH STREET LOOP)

1. Work hours shall be as follows: 7AM to 4PM Monday to Friday and 8AM to 6PM Saturday.
2. The contractor must maintain a minimum of two 11 foot lanes at all times, one lane on each direction.
3. Service road to remain fully closed.
4. Must provide a minimum of 5 feet on the sidewalk for pedestrians at all times.
5. Must coordinate with NYCT Bus Operations prior to mobilizing due to impact on bus stop.
6. The contractor shall secure adequate vehicle turning radius for traffic around the work zone for design vehicles: SU-30 Truck, School Bus, Fire Truck.
7. The removal of existing pavement markings and the installation of temporary pavement markings is required to assist traffic along the work zone.

REGULATOR M-38 EAST 20 STREET, STAGE 1

JJJ. EAST 20 STREET BETWEEN AVENUE C AND STUYVESANT LOOP NORTH (20TH STREET LOOP)

1. Work hours shall be as follows: 7AM to 4PM Monday to Friday and 8AM to 6PM Saturday.
2. The contractor must maintain a minimum of two 11 foot lanes at all times, one lane on each direction.
3. Service road to remain fully open.
4. Must coordinate with NYCDOT Bike Unit prior to mobilizing due to impact on the two-way dedicated bike lane.
5. Must coordinate with NYCT Bus Operations prior to mobilizing due to impact on bus stop.
6. The contractor shall secure adequate vehicle turning radius for traffic around the work zone for design vehicles: SU-30 Truck, School Bus, Fire Truck.
7. The removal of existing pavement markings and the installation of temporary pavement markings is required to assist traffic along the work zone.

REGULATOR M-38 EAST 20 STREET, STAGE 2

KKK. EAST 20 STREET BETWEEN AVENUE C AND STUYVESANT LOOP NORTH (20TH STREET LOOP)

1. Work hours shall be as follows: 7AM to 4PM Monday to Friday and 8AM to 6PM Saturday.
2. The contractor must maintain a minimum of two 11 foot lanes at all times, one lane on each direction.
3. Service road to remain fully open.
4. Must provide a minimum of 5 feet on the sidewalk for pedestrians at all times.
5. Provide certified flaggers to assist pedestrians during work hours due to work zone impact on crosswalk. Must reopen crosswalk after work hours.
6. No impact on bike lanes unless an approval is granted by the NYCDOT Bike Unit.
7. Must coordinate with NYCT Bus Operations prior to mobilizing due to impact on bus stop.
8. The contractor shall secure adequate vehicle turning radius for traffic around the work zone for design vehicles: SU-30 Truck, School Bus, Fire Truck.

9. The removal of existing pavement markings and the installation of temporary pavement markings is required to assist traffic along the work zone.

LLL. INTERSECTION OF EAST 20 STREET AT AVENUE C

1. Work hours shall be as follows: 7AM to 4PM Monday to Friday and 8AM to 6PM Saturday.
2. The contractor must maintain a minimum of two 11 foot lanes on East 20 Street, one lane on each direction. Service road on East 20 Street to remain fully open.
3. No impact on Avenue C travel lanes.
4. Provide certified flaggers to assist pedestrians during work hours due to work zone impact on crosswalk. Must reopen crosswalk after work hours.
5. No impact on bike lanes unless an approval is granted by the NYCDOT Bike Unit.
6. Must coordinate with NYCT Bus Operations prior to mobilizing due to impact on bus stop.
7. The contractor shall secure adequate vehicle turning radius for traffic around the work zone for design vehicles: SU-30 Truck, School Bus, Fire Truck.
8. The removal of existing pavement markings and the installation of temporary pavement markings is required to assist traffic along the work zone.

N.I.G BUILDING CONSTRUCTION

MMM. EAST 20 STREET BETWEEN AVENUE C AND STUYVESANT LOOP NORTH (20TH STREET LOOP)

1. Work hours shall be as follows: 7AM to 4PM Monday to Friday and 8AM to 6PM Saturday.
2. The contractor must maintain a minimum of two 11 foot lanes at all times, one lane on each direction.
3. Must maintain a minimum of one 12 foot lane on the East 20 Street Service Road.
4. Provide certified flaggers to assist pedestrians during work hours due to work zone impact on crosswalk. Must reopen crosswalk after work hours.

NNN. INTERSECTION OF EAST 20 STREET AT STUYVESANT LOOP NORTH (20TH STREET LOOP)

1. Work hours shall be as follows: 7AM to 4PM Monday to Friday and 8AM to 6PM Saturday.
2. The contractor must maintain a minimum of two 11 foot lanes on East 20 Street, one lane on each direction.
3. Must maintain a minimum of one 12 foot lane on the East 20 Street Service Road.
4. Provide certified flaggers to assist pedestrians during work hours due to work zone impact on crosswalk. Must reopen crosswalk after work hours.
5. The contractor shall secure adequate vehicle turning radius for traffic around the work zone for design vehicles: SU-30 Truck, School Bus, Fire Truck.

OOO. EAST 20 STREET BETWEEN STUYVESANT LOOP NORTH (20TH STREET LOOP) AND STUYVESANT LOOP NORTH (20TH STREET LOOP)

1. Work hours shall be as follows: 7AM to 4PM Monday to Friday and 8AM to 6PM Saturday.
2. The removal of existing pavement markings and the installation of temporary pavement markings is required to assist traffic along the work zone.
3. No work on this block.

REGULATOR M-38 AVENUE C SOUTHBOUND, STAGE 1

PPP. AVENUE C BETWEEN EAST 20 STREET AND PETER COOPER ROAD

1. Work hours shall be as follows: 7AM to 4PM Monday to Friday and 8AM to 6PM Saturday.
2. The contractor must provide a minimum of four 10 foot lanes at all times for two-way traffic; two lanes in each direction.
3. Work zone to occupy up to 28 feet of the roadway section, including part of the sidewalk.
4. Must provide a minimum of 5 feet on the sidewalk for pedestrians at all times.
5. No impact on bike lanes unless an approval is granted by the NYCDOT Bike Unit.
6. The contractor shall secure adequate vehicle turning radius for traffic around the work zone for design vehicles: SU-30 Truck, School Bus, Fire Truck.
7. Provide certified flaggers to assist pedestrians during work hours due to work zone impact on crosswalk.
8. Must coordinate with NYCT Bus Operations prior to mobilizing due to impact on bus stop.

QQQ. AVENUE C BETWEEN FDR DRIVE AND EAST 23 STREET

1. Work hours shall be as follows: 7AM to 4PM Monday to Friday and 8AM to 6PM Saturday.
2. The contractor must provide a minimum of four 10 foot lanes at all times for two-way traffic; two lanes in each direction.
3. Work zone to occupy up to 21 feet of the roadway section, including jersey barriers.
4. Must provide a minimum of 5 feet on the sidewalk for pedestrians at all times.
5. No impact on bike lanes unless an approval is granted by the NYCDOT Bike Unit.
6. The contractor shall secure adequate vehicle turning radius for traffic around the work zone for design vehicles: SU-30 Truck, School Bus, Fire Truck.
7. Provide certified flaggers to assist pedestrians during work hours due to work zone impact on crosswalk.
8. Must coordinate with NYCT Bus Operations prior to mobilizing due to impact on bus stop.

REGULATOR M-38 AVENUE C SOUTHBOUND, STAGE 2

RRR. AVENUE C BETWEEN EAST 20 STREET AND PETER COOPER ROAD

1. Work hours shall be as follows: 7AM to 4PM Monday to Friday and 8AM to 6PM Saturday.
2. The contractor must provide a minimum of four 10 foot lanes at all times for two-way traffic; two lanes in each direction.
3. Work zone to occupy up to 28 feet of the roadway section, including part of the sidewalk.
4. No impact on bike lanes unless an approval is granted by the NYCDOT Bike Unit.
5. The contractor shall secure adequate vehicle turning radius for traffic around the work zone for design vehicles: SU-30 Truck, School Bus, Fire Truck.
6. Must coordinate with NYCT Bus Operations prior to mobilizing due to impact on bus stop.

SSS. AVENUE C BETWEEN FDR DRIVE AND EAST 23 STREET

1. Work hours shall be as follows: 7AM to 4PM Monday to Friday and 8AM to 6PM Saturday.
2. The contractor must provide a minimum of four 10 foot lanes at all times for two-way traffic; two lanes in each direction.
3. Work zone to occupy up to 28 feet of the roadway section, including part of the sidewalk.
4. No impact on bike lanes unless an approval is granted by the NYCDOT Bike Unit.
5. The contractor shall secure adequate vehicle turning radius for traffic around the work zone for design vehicles: SU-30 Truck, School Bus, Fire Truck.
6. Must coordinate with NYCT Bus Operations prior to mobilizing due to impact on bus stop.

REGULATOR M-38 AVENUE C SOUTHBOUND, STAGE 3

TTT. AVENUE C BETWEEN EAST 20 STREET AND PETER COOPER ROAD

1. Work hours shall be as follows: 7AM to 4PM Monday to Friday and 8AM to 6PM Saturday.
2. The contractor must provide a minimum of four 10 foot lanes at all times for two-way traffic; two lanes in each direction.
3. Work zone to occupy up to 24 feet of the roadway section, including part of the sidewalk.
4. No impact on bike lanes unless an approval is granted by the NYCDOT Bike Unit.
5. The contractor shall secure adequate vehicle turning radius for traffic around the work zone for design vehicles: SU-30 Truck, School Bus, Fire Truck.
6. Must coordinate with NYCT Bus Operations prior to mobilizing due to impact on bus stop.

UUU. AVENUE C BETWEEN FDR DRIVE AND EAST 23 STREET

1. Work hours shall be as follows: 7AM to 4PM Monday to Friday and 8AM to 6PM Saturday.
2. The contractor must provide a minimum of four 10 foot lanes at all times for two-way traffic; two lanes in each direction.
3. Work zone to occupy up to 24 feet of the roadway section, including part of the sidewalk.
4. No impact on bike lanes unless an approval is granted by the NYCDOT Bike Unit.

5. The contractor shall secure adequate vehicle turning radius for traffic around the work zone for design vehicles: SU-30 Truck, School Bus, Fire Truck.
6. Must coordinate with NYCT Bus Operations prior to mobilizing due to impact on bus stop.

VVV. INTERSECTION OF AVENUE C AT EAST 23 STREET

1. Work hours shall be as follows: 7AM to 4PM Monday to Friday and 8AM to 6PM Saturday.
2. The contractor must provide a minimum of four 10 foot lanes for two-way traffic on Avenue C; two lanes in each direction.
3. No impact on East 23 Street travel lanes.
4. Provide certified flaggers to assist pedestrians during work hours due to work zone impact on crosswalk. Must reopen crosswalk after work hours.
5. No impact on bike lanes unless an approval is granted by the NYCDOT Bike Unit.
6. The contractor shall secure adequate vehicle turning radius for traffic around the work zone for design vehicles: SU-30 Truck, School Bus, Fire Truck.
7. Must coordinate with NYCT Bus Operations prior to mobilizing due to impact on bus stop.

REGULATOR M-38 AVENUE C NORTHBOUND, STAGE 1 AND STAGE 2

WWW. AVENUE C BETWEEN EAST 20 STREET AND PETER COOPER ROAD

1. Work hours shall be as follows: 7AM to 4PM Monday to Friday and 8AM to 6PM Saturday.
2. The contractor must provide a minimum of four 10 foot lanes at all times for two-way traffic; two lanes in each direction.
3. No impact on bike lanes unless an approval is granted by the NYCDOT Bike Unit.
4. The contractor shall secure adequate vehicle turning radius for traffic around the work zone for design vehicles: SU-30 Truck, School Bus, Fire Truck.

XXX. AVENUE C BETWEEN FDR DRIVE AND EAST 23 STREET

1. Work hours shall be as follows: 7AM to 4PM Monday to Friday and 8AM to 6PM Saturday.
2. The contractor must provide a minimum of four 10 foot lanes at all times for two-way traffic; two lanes in each direction.
3. No impact on bike lanes unless an approval is granted by the NYCDOT Bike Unit.
4. The contractor shall secure adequate vehicle turning radius for traffic around the work zone for design vehicles: SU-30 Truck, School Bus, Fire Truck.

REGULATOR M-38 AVENUE C NORTHBOUND, STAGE 3

YYY. AVENUE C BETWEEN EAST 20 STREET AND PETER COOPER ROAD
AVENUE C BETWEEN FDR DRIVE AND EAST 23 STREET

1. No impact on the travel lanes on Avenue C; work to be on parking lot area during this stage.
2. No impact on bike lanes unless an approval is granted by the NYCDOT Bike Unit.

REGULATOR M-38A AVENUE C NORTHBOUND, STAGE 1 AND STAGE 2

ZZZ. AVENUE C BETWEEN EAST 20 STREET AND PETER COOPER ROAD

1. Work hours shall be as follows: 7AM to 4PM Monday to Friday and 8AM to 6PM Saturday.
2. The contractor must provide a minimum of four 10 foot lanes at all times for two-way traffic; two lanes in each direction.
3. Must coordinate with NYCDOT Bike Unit prior to mobilizing.
4. The contractor shall secure adequate vehicle turning radius for traffic around the work zone for design vehicles: SU-30 Truck, School Bus, Fire Truck.

AAAA. AVENUE C BETWEEN FDR DRIVE AND EAST 23 STREET

1. Work hours shall be as follows: 7AM to 4PM Monday to Friday and 8AM to 6PM Saturday.
2. The contractor must provide a minimum of four 10 foot lanes at all times for two-way traffic; two lanes in each direction.
3. No impact on bike lanes unless an approval is granted by the NYCDOT Bike Unit.

4. The contractor shall secure adequate vehicle turning radius for traffic around the work zone for design vehicles: SU-30 Truck, School Bus, Fire Truck.

REGULATOR M-38B AVENUE C NORTHBOUND, STAGE 1

BBBB. EAST 23 STREET BETWEEN AVENUE C AND ASSER LEVY PLACE

1. Work hours shall be as follows: 7AM to 4PM Monday to Friday and 8AM to 6PM Saturday.
2. The contractor must maintain four 11 foot lanes on East 23 Street; one thru lane eastbound, two thru lanes westbound and one right-turning lane from East 23 Street Service Road into Avenue C.
3. Provide certified flaggers to assist pedestrians during work hours due to work zone impact on crosswalk. Must reopen crosswalk after work hours.
4. The contractor shall secure adequate vehicle turning radius for traffic around the work zone for design vehicles: SU-30 Truck, School Bus, Fire Truck.
5. Must coordinate with NYCT Bus Operations prior to mobilizing due to impact on bus stop.

CCCC. INTERSECTION OF EAST 23 STREET AT AVENUE C

1. Work hours shall be as follows: 7AM to 4PM Monday to Friday and 8AM to 6PM Saturday.
2. The contractor must maintain a minimum of three 11 foot lanes on East 23 Street. Also, must provide one right-turning lane from East 23 Street Service Road into Avenue C.
3. Must maintain a minimum of four 11 foot lanes on Avenue C; two lanes in each direction.
4. Provide certified flaggers to assist pedestrians during work hours due to work zone impact on crosswalk. Must reopen crosswalk after work hours.
5. No impact on bike lanes unless an approval is granted by the NYCDOT Bike Unit.
6. The contractor shall secure adequate vehicle turning radius for traffic around the work zone for design vehicles: SU-30 Truck, School Bus, Fire Truck.
7. Must coordinate with NYCT Bus Operations prior to mobilizing due to impact on bus stop.
8. The contractor must coordinate with NYPD Traffic Operations; must provide two (2) Traffic Enforcement Agents (TEA) at this location from 7AM to 7PM Monday to Friday.

REGULATOR M-38B AVENUE C NORTHBOUND, STAGE 2

DDDD. EAST 23 STREET BETWEEN AVENUE C AND ASSER LEVY PLACE

1. Work hours shall be as follows: 7AM to 4PM Monday to Friday and 8AM to 6PM Saturday.
2. The contractor must maintain three 11 foot lanes on East 23 Street; one thru lane eastbound, one thru lane westbound and one right-turning lane from East 23 Street Service Road into Avenue C.
3. Provide certified flaggers to assist pedestrians during work hours due to work zone impact on crosswalk. Must reopen crosswalk after work hours.
4. The contractor shall secure adequate vehicle turning radius for traffic around the work zone for design vehicles: SU-30 Truck, School Bus, Fire Truck.
5. Must coordinate with NYCT Bus Operations prior to mobilizing due to impact on bus stop.
6. The contractor must coordinate with NYPD Traffic Operations; must provide two (2) Traffic Enforcement Agents (TEA) at this location from 7AM to 7PM Monday to Friday.

EEEE. INTERSECTION OF EAST 23 STREET AT AVENUE C

1. Work hours shall be as follows: 7AM to 4PM Monday to Friday and 8AM to 6PM Saturday.
2. The contractor must maintain two thru 11 foot lanes on East 23 Street, one right-turning lane from East 23 Street Service Road into Avenue C southbound and one 11 foot left turning lane from East 23 Street into Avenue C southbound.
3. Must maintain a minimum of four 11 foot lanes on Avenue C; two lanes in each direction.
4. No impact on bike lanes unless an approval is granted by the NYCDOT Bike Unit.
5. Provide certified flaggers to assist pedestrians during work hours due to work zone impact on crosswalk. Must reopen crosswalk after work hours.
6. The contractor shall secure adequate vehicle turning radius for traffic around the work zone for design vehicles: SU-30 Truck, School Bus, Fire Truck.
7. Must coordinate with NYCT Bus Operations prior to mobilizing due to impact on bus stop.

8. The contractor must coordinate with NYPD Traffic Operations; must provide two (2) Traffic Enforcement Agents (TEA) at this location from 7AM to 7PM Monday to Friday.

REGULATOR M-39 IN ASSER LEVY PARK

FFFF. AVENUE C BETWEEN EAST 23 STREET AND EAST 25 STREET

1. No impact on the roadway section during work at this location.

STIPULATIONS FOR ROADWAY RESURFACING

A. AVENUE C BETWEEN EAST 20 STREET AND EAST 23 STREET

1. Work hours shall be as follows: 10PM to 6AM Monday night to Friday morning.
2. The contractor must provide a minimum of four 10 foot lanes at all times for two-way traffic; two lanes in each direction. In cases where maintaining four travel lanes is not viable, the contractor must present an MPT plan including a partial detour of traffic for OCMC-Streets evaluation and approval.
3. Must maintain a minimum of 5ft on the sidewalk for pedestrians.
4. No impact on bike lanes unless an approval is granted by the NYCDOT Bike Unit.
5. Do not leave any materials, equipment, containers in front of schools, houses of worship, hospitals and government facilities.
6. No noisy operations permitted during nighttime roadway resurfacing activities; any noisy construction activities must be completed as part of the project construction and following project construction stipulations.

B. INTERSECTION OF AVENUE C AT EAST 23 STREET

1. Work hours shall be as follows: 10PM to 6AM Monday night to Friday morning.
2. The contractor must provide a minimum of four 10 foot lanes at all times for two-way traffic, two lanes in each direction, on Avenue C. In cases where maintaining four travel lanes is not viable, the contractor must present an MPT plan including a partial detour of traffic for OCMC-Streets evaluation and approval.
3. No impact on East 23 Street travel lanes.
4. Use flaggers to manage pedestrians during work hours. All crosswalks must be opened after work hours.
5. No impact on bike lanes unless an approval is granted by the NYCDOT Bike Unit.
6. Do not leave any materials, equipment, containers in front of schools, houses of worship, hospitals and government facilities.
7. No noisy operations permitted during nighttime roadway resurfacing activities; any noisy construction activities must be completed as part of the project construction and following project construction stipulations.

C. AVENUE C BETWEEN EAST 18 STREET (AVENUE C LOOP) AND EAST 20 STREET

1. Work hours shall be as follows: 8PM Saturday to 6AM Monday.
2. The contractor must maintain two 11 foot lanes; one northbound lane and one southbound shared lane (shared for thru traffic and into FDR Drive southbound).
3. Must maintain a minimum of 5ft on the sidewalk for pedestrians.
4. No impact on bike lanes unless an approval is granted by the NYCDOT Bike Unit.
5. Do not leave any materials, equipment, containers in front of schools, houses of worship, hospitals and government facilities.
6. No noisy operations permitted during nighttime roadway resurfacing activities; any noisy construction activities must be completed as part of the project construction and following project construction stipulations.

D. INTERSECTION OF EAST 18 STREET (AVENUE C LOOP) AT AVENUE C

1. Work hours shall be as follows: 8PM Saturday to 6AM Monday.
2. The contractor must maintain two 11 foot lanes; one northbound lane and one southbound shared lane (shared for thru traffic and into FDR Drive southbound).
3. Must maintain a minimum of one 11 foot lane on East 18 Street.
4. Use flaggers to manage pedestrians during work hours. All crosswalks must be opened after work hours.
5. No impact on bike lanes unless an approval is granted by the NYCDOT Bike Unit.

6. Do not leave any materials, equipment, containers in front of schools, houses of worship, hospitals and government facilities.
7. No noisy operations permitted during nighttime roadway resurfacing activities; any noisy construction activities must be completed as part of the project construction and following project construction stipulations.

E. ROADWAY RESURFACING STIPULATION FOR OTHER ARTERIALS AND COLLECTORS STREETS

1. Work hours shall be as follows: 10PM to 6AM Monday to Thursday night.
2. On streets with center line mall, the contractor must work on one side of the street at a time while no impact on the other side of the center line mall. The contractor must maintain a minimum of two 11 foot lanes during roadway resurfacing activities; a minimum of one 11 foot lane on each direction.
3. On two-way streets defined by double yellow line, the contractor must maintain a minimum of two 11 foot lanes during roadway resurfacing activities; one lane on each direction.
4. Provide certified flaggers to assist pedestrians during work hours due to work zone impact on crosswalk. Must reopen crosswalk after work hours.
5. No impact on bike lanes unless an approval is granted by the NYCDOT Bike Unit.
6. The contractor shall secure adequate vehicle turning radius for traffic around the work zone for design vehicles: SU-30 Truck, School Bus, Fire Truck.
7. Must coordinate with NYCT Bus Operations prior to mobilizing if roadway resurfacing might impact a bus stop or bus route.
8. Must notify neighborhood of paving resurfacing in the area a minimum of 48 hours in advance.
9. Restore pavement markings and traffic signs to original regulatory conditions.
10. Do not leave any materials, equipment, containers in front of schools, houses of worship, hospitals and government facilities.
11. No noisy operations permitted during nighttime roadway resurfacing activities; any noisy activities such as jackhammering, trench opening, asphalt cutting must be completed as part of the project construction stipulations.

F. ROADWAY RESURFACING STIPULATION FOR LOCAL STREETS

1. Work hours shall be as follows: 10PM to 6AM Monday to Friday night.
2. The contractor must maintain one 11 foot lane on one-way local streets and a minimum of two 11 foot lanes on two-way local streets, one lane on each direction.
3. Provide certified flaggers to assist pedestrians during work hours due to work zone impact on crosswalk. Must reopen crosswalk after work hours.
4. Must coordinate with NYCDOT Bike Unit prior to mobilizing.
5. The contractor shall secure adequate vehicle turning radius for traffic around the work zone for design vehicles: SU-30 Truck, School Bus, Fire Truck.
6. Must coordinate with NYCT Bus Operations prior to mobilizing if roadway resurfacing might impact a bus stop or bus route.
7. Must notify neighborhood of paving resurfacing in the area a minimum of 48 hours in advance.
8. Restore pavement markings and traffic signs to original regulatory conditions.
9. Do not leave any materials, equipment, containers in front of schools, houses of worship, hospitals and government facilities.
10. No noisy operations permitted during nighttime roadway resurfacing activities; any noisy construction activities must be completed as part of the project construction and following project construction stipulations.

III. GENERAL NOTES

A. **THIS IS NOT A PERMIT.** THIS STIPULATION SHEET MUST BE SUBMITTED WITH ALL REQUESTS FOR PERMITS PERTAINING TO THE ABOVE CONTRACT AND PRESENT AT THE WORK SITE ALONG WITH ALL ACTIVE CONSTRUCTION PERMITS WHEN THE APPROVED WORK IS BEING PERFORMED.

B. THE PERMITTEE MUST COMPLY WITH ALL CONSTRUCTION EMBARGOS ISSUED BY THE NYCDOT INCLUDING THE HOLIDAY EMBARGO.

C. THE PERMITTEE SHALL COMPLY WITH ALL REQUIREMENTS OF THE NYCDOT SPECIAL EVENTS UNIT AS IDENTIFIED BELOW:

1. STREET FAIRS / FESTIVALS

- ALL EXCAVATIONS MUST BE PLATED WITH SKID RESISTANT PLATES.
- PLATES MUST BE RECESSED AND FLUSH WITH PAVEMENT.

- ALL PAVEMENT DEFECTS MUST BE CORRECTED WITHIN OR ADJACENT TO THE WORK ZONE.
- THE CONTRACTOR IS RESPONSIBLE FOR ANY DEFECTS WITHIN THE IMMEDIATE VICINITY IF NYCDOT STREET & ARTERIAL MAINTENANCE CANNOT MAKE REPAIRS DUE TO PROJECT INTERFERENCE (AS DETERMINED BY NYCDOT).
- ALL EQUIPMENT, TRAILERS AND MATERIAL STORAGE MUST BE REMOVED.

2. RUNNING / WALKING / BIKING EVENTS

- ALL EXCAVATIONS MUST BE BACKFILLED AND PAVED OR PLATES MUST BE RECESSED AND PAVED OVER FLUSH WITH PAVEMENT.
- ALL PAVEMENT DEFECTS MUST BE CORRECTED WITHIN OR ADJACENT TO THE WORK ZONE.
- THE CONTRACTOR IS RESPONSIBLE FOR ANY DEFECTS WITHIN THE IMMEDIATE VICINITY IF NYCDOT STREET & ARTERIAL MAINTENANCE CANNOT MAKE REPAIRS DUE TO PROJECT INTERFERENCE (AS DETERMINED BY NYCDOT).
- ALL EQUIPMENT, TRAILERS AND MATERIAL STORAGE MUST BE REMOVED.

3. PARADES

- ALL EXCAVATIONS MUST BE BACKFILLED AND PAVED OR PLATES MUST BE RECESSED AND PAVED OVER FLUSH WITH PAVEMENT.
- FORMATION AND DISPERSAL AREA PLATES MUST BE RECESSED AND FLUSH WITH PAVEMENT (PLATES MUST BE SKID RESISTANT).
- ALL PAVEMENT DEFECTS MUST BE CORRECTED WITHIN OR ADJACENT TO THE WORK ZONE.
- THE CONTRACTOR IS RESPONSIBLE FOR ANY DEFECTS WITHIN THE IMMEDIATE VICINITY IF NYCDOT STREET & ARTERIAL MAINTENANCE CANNOT MAKE REPAIRS DUE TO PROJECT INTERFERENCE (AS DETERMINED BY NYCDOT).
- ALL EQUIPMENT, TRAILERS AND MATERIAL STORAGE MUST BE REMOVED.

4. MAYORAL EVENTS

- ALL EXCAVATIONS MUST BE BACKFILLED AND PAVED OR PLATES MUST BE RECESSED AND PAVED OVER FLUSH WITH PAVEMENT.
- ALL PAVEMENT DEFECTS MUST BE CORRECTED WITHIN OR ADJACENT TO THE WORK ZONE.
- THE CONTRACTOR IS RESPONSIBLE FOR ANY DEFECTS WITHIN THE IMMEDIATE VICINITY IF NYCDOT STREET & ARTERIAL MAINTENANCE CANNOT MAKE REPAIRS DUE TO PROJECT INTERFERENCE (AS DETERMINED BY NYCDOT).
- ALL EQUIPMENT, TRAILERS AND MATERIAL STORAGE MUST BE REMOVED.

D. ALL RELOCATION WORK BY THE UTILITIES SUCH AS; CON EDISON, TELEPHONE, GAS AND CABLE COMPANIES SHALL PRECEDE THE CONTRACTORS' START OF WORK ON ALL AFFECTED ROADWAYS IN THE IMPACTED CONTRACT AREA.

E. THE CONTRACTOR IS ADVISED THAT OTHER CONTRACTORS MAY BE WORKING IN THE GENERAL AREA DURING THE TERM OF THIS STIPULATION. IN WHICH EVENT, THE CONTRACTOR MAY REQUIRE MODIFICATIONS BY THE OCMC-STREETS.

F. THE PERMITTEE IS NOT AUTHORIZED TO ENTER, OCCUPY OR USE ANY PUBLICLY-OWNED OR PRIVATELY OWNED, NON-PAVED, LANDSCAPE OR NON-LANDSCAPED LOCATION WITHOUT SPECIFIC WRITTEN PERMISSION. WHEN THE LOCATION IS WITHIN THE RIGHT-OF-WAY OF A LIMITED-ACCESS ARTERIAL HIGHWAY, **WRITTEN** APPROVAL FROM THE NYCDOT OCMC-HIGHWAYS IS REQUIRED. WHEN THE LOCATION IS WITHIN THE RIGHT-OF-WAY OF A PUBLIC STREET OR PUBLIC PARK, **WRITTEN** APPROVAL FROM THE NEW YORK CITY DEPARTMENT OF TRANSPORTATION OR NEW YORK CITY DEPARTMENT OF PARKS AND RECREATION IS REQUIRED. WHEN THE LOCATION IS WITHIN THE RIGHT-OF-WAY OF ANY OTHER JURISDICTION SUCH AS PRIVATE PROPERTY, STATE, FEDERAL ETC., IT IS THE PERMITTEE'S RESPONSIBILITY TO DETERMINE THE PROPERTY OWNER AND OBTAIN THE WRITTEN APPROVAL.

G. THE PERMITTEE SHALL ADHERE TO THE NYCDOT BUREAU OF BRIDGES' SPECIAL PROVISIONS FOR LANDSCAPE PROTECTION, MAINTENANCE AND RESTORATION, ITEMS 1.18.15 THROUGH 1.18.19, WHENEVER AND WHEREVER ANY OF THE PERMITTEE'S ACTIVITIES OCCUR WITHIN A LIMITED ACCESS ARTERIAL HIGHWAY RIGHT - OF - WAY.

H. NO DEVIATION OR DEPARTURE FROM THESE STIPULATIONS WILL BE PERMITTED WITHOUT THE PRIOR WRITTEN APPROVAL FROM THE OCMC-STREETS. REQUEST FOR SUCH MODIFICATIONS SHALL BE SUBMITTED TO THE OFFICE OF THE OCMC-STREETS, NEW YORK CITY DEPARTMENT OF TRANSPORTATION, A MINIMUM OF TWENTY (20) DAYS IN ADVANCE FOR CONSIDERATION.

I. FOR ANY CONSTRUCTION ACTIVITY RESULTING IN THE FULL CLOSURE OF A ROADWAY FOR MORE THAN 180 CONSECUTIVE CALENDAR DAYS, THE CONTRACTOR MUST PRODUCE AND SUBMIT A COMMUNITY REASSESSMENT, IMPACT AND AMELIORATION (CRIA) STATEMENT TO NYCDOT PLANNING AND OBTAIN THEIR APPROVAL BEFORE APPLYING FOR PERMITS, IN COMPLIANCE WITH THE PROVISIONS OF **LOCAL LAW 24 STREET CLOSURE LAW.**

J. FOR THIS PROJECT THE CONTRACTOR SHALL FURNISH, INSTALL AND MAINTAIN ALL NECESSARY ADVANCE WARNING AND DETOUR SIGNS, TEMPORARY CONTROL DEVICES, BARRICADES, LIGHTS AND FLASHING ARROW BOARDS IN ACCORDANCE WITH THE "MANUAL ON UNIFORM TRAFFIC CONTROL DEVICES," THE TYPICAL SCHEMES INCLUDED IN THIS SPECIFICATION; AND AS ORDERED BY THE ENGINEER-IN-CHARGE AND THE OCMC-STREETS.

K. THE CONTRACTOR SHALL BE RESPONSIBLE FOR IDENTIFYING HIS CONSTRUCTION SIGNAGE. THE IDENTIFICATION SHALL INCLUDE THE CONTRACTOR'S NAME, SPONSORING AGENCY NAME AND THE CONTRACT NUMBER. THE IDENTIFICATION SHALL BE PLACED ON THE BACK OF THE SIGN. THE LETTERING SHALL BE THREE (3) INCHES HIGH.

L. THE CONTRACTOR SHALL BE RESPONSIBLE FOR THE MAINTENANCE OF ROADWAY TURNING RADIUS FOR DESIGN VEHICLES SU-30 TRUCK, FIRE TRUCKS AND SCHOOL BUSES WHEN IMPLEMENTING THEIR MPT PLANS.

M. THE OCMC-STREETS RESERVES THE RIGHT TO VOID OR MODIFY THESE STIPULATIONS SHOULD CONSTRUCTION FAIL TO COMMENCE WITHIN TWO (2) YEARS OF THE SIGNED DATE OF THESE STIPULATIONS.

NICOLAS DAGHER
NICOLAS DAGHER, P.E.
EXECUTIVE DIRECTOR
OCMC

GARY SMALLS
GARY SMALLS
DIRECTOR
OCMC-STREETS

City of New York
Department of Design and Construction
30-30 Thomson Avenue
Long Island City, NY 11101

HCP- Draft
October 1, 2020

Attn: Mihir Shah (718) 391-3154

Re: East Side Coastal Resiliency (ESCR), SANDRESPC
South Interceptor Gate-Between Jackson Street and Cherry Street

WORK PERMIT

Stipulations are hereby given to the New York City Department of Design and Construction and its duly authorized representatives, to enter upon and restrict the flow of traffic according to the times and schedules as stipulated herein on the Franklin D. Roosevelt Drive (FDR Drive) Between Jackson Street and Cherry Street for the purpose of installation of East Side Coastal Resiliency; Temporary Pavement Markings, Concrete Barrier, Support of Excavation, PC Sewer Connection, Backfilling, Interceptor Gate Building, Utility Connections, PC Sewer, 12-inch Water Main work, Catch Basin, Pavement Restoration, and related work, as per submitted KSE's drawing from TC309 to TC317, together with all work incidental thereto, subject to the following stipulations:

1. This permission shall be in effect as of xxxxxxxx

2. The Permittee may close lane(s) on the FDR Drive, southbound Between Jackson Street and Cherry Street according with the following schedule:

   a) One lane closure:

      10:00PM to 5:30AM, Monday night to Friday morning
      11:00PM to 7:00AM, Friday night to Saturday morning
      11:00PM to 10:00AM, Saturday night to Sunday morning

   b) Two lanes closure:

      1:00AM to 5:00AM, Tuesday morning to Friday morning
      1:00AM to 6:00AM, Saturday morning
      1:00AM to 7:00AM, Sunday morning

3. The lane closures shall conform to the New York State Dept. of Transportation, Design Guide and Standard for Maintenance, and Protection of Traffic, the Manual of Uniform Traffic Devices (MUTCD), and OCMC approved plans.

4. The Permittee is required to submit a weekly schedule of work. This schedule is to be sent to OCMC- Highways contact person on the Wednesday preceding the next weeks work. The schedule will include the following information:

   The name of the roadway/bridge on which lanes will be closed
   The number of lanes to be closed

The direction in which the lanes will be closed
The hours and days of the lane closing

5. All lane closures must be coordinated with the Engineering in Charge (EIC) for the other adjacent projects.

6. The Permittee MUST obtain a permit from the Overweight/ over dimension Unit of the NYCDOT Bureau of Bridges for Overweight/ over dimension vehicles on the Parkway/Drive.

7. This permit must be present on site when the approved work is being performed.

8. This permit is not valid unless it is signed by both the New York City Department of Transportation representative and the authorized representative of the Permittee.

9. In the event of a strike against the NYC Transit, no lane or ramp closures will be permitted from 5:00 AM to 12:00AM (midnight).

10. Section 24 - 224, Administrative Code Variance, is hereby granted for hours and days stipulated above.

11. During the time a lane closure is permitted, the Permittee may intermittently stop traffic on the adjacent lane(s) of the same roadway for periods not to exceed five (5) minutes in duration for the purpose of transporting or securing equipment that my extend beyond the closed lane(s). A minimum of one (1) hour, or until the traffic queue is relieved, whichever period is shorter, is required between two such closures.

12. No staging and/or storage sites are authorized or will be permitted unless approved in writing (where owned by New York City) by the New York City Department of Transportation's Division of Roadway Repair and Maintenance (RRM) and/or the New York City Department of Parks and Recreation (if park land is involved) or (where State owned) by New York State Department of Transportation with New York City concurrence where applicable. Except for State owned sites where City concurrence is not necessary changes in the site or limits can only be made by an amendment to this permit as applicable. A detailed drawing must be submitted and will become an attachment to the amendment. A DPR Permit shall constitute written approval from the Parks Dept.

13. The Permittee agrees to assume all responsibility for injury or damages to private and/or City property caused through the operations of the permit and to save and hold harmless the City of New York and the New York City Department of Transportation from all claims and suits which may arise therefrom.

14. The Permittee shall notify in writing, the New York City Department of Transportation, OCMC three (3) weeks' notice prior to any proposed lane change, shift or ramp closures prior to commencing work operations. Four (4) weeks' notice is required when it is anticipated that temporary traffic signals and/or signal timing adjustments will be needed.

15. The Permittee shall be responsible to provide notification to the local Community Board and Borough President's Office prior to the commencement of work. Additionally notification shall be made to the local Councilman's office. Proof of notification must be filed with the OCMC prior to the commencement of work.

16. The Permittee shall notify the New York City Dept. of Transportation's Situation Room at (718-433-3340), the NYPD Traffic Management Center at (718 706-6756), the Chief of Emergency Medical Services at (718-999-2770) and the local fire house prior to his/her proposed traffic lane reductions or street closings for any purpose. The Permittee shall also immediately notify the Situation Room upon reopening and in the event of an emergency condition.

17. In the event, a full highway closure for period greater than fifteen (15) minutes is permitted, the Permittee must notify all those parties listed in the prior three stipulations at least two weeks in advance. Additionally the Permittee must prepare a press release for the TV, Radio and Newspaper Media at least one week prior to the closure.

18. The Permittee shall adhere to all pertinent rules and regulations of the New York City Department of Transportation relative to the use and occupancy of street space, the provisions of his agreement and the performance of his work.

19. The Permittee shall adhere to the NYCDOT Bureau of Bridges' Special Provisions for Landscape Protection, Maintenance and Restoration, items 1.18.15 through 1.18.19, whenever and wherever any of the Permittee's activities occur within a limited access arterial highway right - of - way. Copies of these provisions may be obtained from the New York City Department of Transportation's Director of Arterial Maintenance at 212 – 487-6837.

20. This Permit is limited to activity performed in conformance with this agreement with the New York City Department of Transportation and does not permit any other activities, which could be a hazard or distraction to the roadway user.

21. No deviation or departure from these stipulations will be permitted without the prior written approval of the New York City Department of Transportation. Requests for such modifications shall be submitted to the OCMC a minimum of ten (10) days in advance for consideration.

22. To ensure a traffic flow at all times storage of materials and equipment shall not be permitted within the traveled way of the highway. Storage areas shall be separated from the traveled way by a clear space of 30 feet minimum width, unless such storage is placed behind concrete barrier or permanently installed bridge railing.

23. Any excavations shall be adequately fenced and/or decked over by the Permittee to preclude entry by errant vehicles, pedestrians or animals.

24. The Permittee shall insure that construction materials and/or excavated soil and rocks temporarily stored on slopes are secured by straw bales or other effective means to prevent their movement into the travel way and clear zone (recovery zone) area.

25. When work is performed in or adjacent to sidewalk areas, a safe pedestrian walkway having a minimum width of five (5) feet shall be provided at all times by the Permittee.

26. Concurrent with construction work of this contract, if other projects on this and/or adjacent highways are under construction then the Permittee is to become familiar with the scheduling of those projects and schedule his activities accordingly. To facilitate the flow of traffic, the permissible work hours may be modified as deemed necessary by the New York City Department of Transportation.

27. In order to provide an adequate transition for the safe flow of traffic, when the Permittee's (or another Permittee's) work sites are in two (2) different lanes in the same direction, those work sites shall be separated by a distance of at least two (2) miles.

28. Warning signs and traffic safety devices shall be provided, installed, maintained and removed by the Permittee in accordance with the New York State Department of Transportation's "Manual of Uniform Traffic Control Devices". The Permittee shall provide the appropriate channelization for traffic approaching and leaving his/her worksite. The Permittee shall provide flag persons, cones, barricades, etc. as required for public safety. The Permittee is responsible for the adequacy of the safety devices. The Permittee shall coordinate his/her lane closures with the lane closures of any other Permittee working within 2 miles of his/her work area.

29. Operation of a crane, derrick, shovel or other similar equipment for any and all work within the streets shall be carried out by the Permittee in accordance with the Rules, Regulations and Requirements of the New York City Department of Transportation and the New York City Department of Buildings and shall comply with all provisions of the New York City Noise Control Code. In addition, if this equipment is to be placed so that any part of the load will be superimposed on the sidewalk or roadway, the Permittee must file, with the New York City Department of Transportation, Office of Construction Mitigation and Coordination, a statement by a Professional Engineer, licensed by the State of New York, certifying the following:

    I. That the sidewalk or roadway area and the supporting subgrade can safely bear the crane load. Should the condition of the sidewalk or roadway area require that the crane load be distributed over a larger area than afforded by the elements of the crane, the engineer shall furnish the full dimensioned details of the load distribution.

    II. That the Engineer has taken all necessary measures to ascertain that there is no vault or subway tunnel underneath the sidewalk area or that if a vault or subway tunnel does exist its roof is sufficiently strong to support the load to be superimposed thereof.

    III. That the sheeting or retaining walls supporting any excavations adjoining the sidewalk or roadway area required to carry a load have been examined by the Engineer and have been found to be sufficiently strong to support the area carrying the crane load. Should the crane be employed making any excavation adjacent to the crane, the Engineer shall specify the sheeting or retaining wall reinforcement required to support the crane.

30. A Holiday Embargo is in effect for the Holidays (as determined by the New York City Office of Payroll Administration) with the following provisions:

    I. When a Holiday falls or is observed by the City of New York on a Monday or Friday no lane or ramp closures are permitted from noon on the previous business day to 6:01 AM on the following business day. For example if the holiday falls or is observed on Friday then no lane closure would be permitted from 12:01 PM on Thursday to 6:01 AM on Monday. If the Holiday falls or is observed on Monday then no lane closure is permitted from 12:01 PM on Friday to 6:01 AM on Tuesday. In addition when a Holiday falls or is observed midweek (Tuesday, Wednesday or Thursday) no Lane closures shall be permitted from noon on the previous business day to 6:01 AM on the following business day.

    II. The Holiday Embargo as detailed above is in effect for the following Holidays: New Year's Day, Mother Day, Memorial Day, Independence Day, Labor Day, Thanksgiving Day, and Christmas Day.

Note: for Thanksgiving Day the Embargo begins on Wednesday at 12 noon and extends to Monday 6 AM, at which time the original stipulations shall be in effect.

III. A "Holiday Construction Embargo" will be in effect on Gridlock Alert Days from mid - November (the exact dates will be published each year in the New York City Department of Transportation's OCMC yearly Holiday Embargo release, there are approximately ten (10)) to January 2nd. During this period, no lane or ramp closings will be permitted from 6:00 AM to Midnight except by written permission from the OCMC. This stipulation supersedes all others in this permit.

IV. A special embargo is in effect for the following holidays: Eve of Jewish New Year, Eve of Yom Kippur, Eve of Passover. No lane or ramp closures permitted from 1:00 PM to sundown.

31. A "Holiday Construction Embargo" will be in effect on Gridlock Alert Days from mid - November (the exact dates will be published each year in the New York City Department of Transportation's OCMC yearly Holiday Embargo release, there are approximately ten (10) days to January 2nd. During this period, no lane or ramp closings will be permitted from 6:00 AM to Midnight except by written permission from the OCMC. This stipulation supersedes all others in this permit.

32. When events occur at FOR YANKEE STADIUM, no lane or ramp closures will be permitted as noted below:

    a. From two hours before the event begins until one hour after the event begins, no lane or ramp closures permitted on: FDR Drive - northbound

    b. From one hour after the event begins until two hours after the event concludes, no lane or ramp closures permitted on: FDR Drive - southbound

33. Work cannot be performed during the New York City 5 Boroughs Bike Tour and the New York City Marathon, unless granted special permission by the New York City Department of Transportation, Office of Construction Mitigation and Coordination.

34. The Department of Parks and Recreation's conditions, terms and special conditions as presented in their Permit, is an integral part of this Permit.

35. Boring holes shall be back-filled with sand and compacted. In sidewalks, the last six (6) inches of the holes shall be restored with concrete. In paved areas the last six (6) inches shall be restored with concrete and/or asphalt to match the existing. On structural decks, holes shall be restored in kind.

36. The Permittee shall comply with the Industrial Code of the State of New York Part (Rule No.53) relating to Construction, Excavation and Demolition Operations at or near underground facilities. Additionally, the Permittee shall similarly notify the owners of overhead cables or other electrical or street lighting equipment in the area covered by the Permit.

37. The Permittee is reminded that the appropriate Rules and Regulations that apply to the cleaning and painting of structural steel must be rigidly followed, as specified by NYSDOT Specifications.

38. When a contractor performs work at night, the work site shall be illuminated to the satisfaction of the Engineer-In-Charge (EIC). The EIC shall be the sole judge of when illumination is required.

39. The contractor shall be responsible for identifying his/her construction signage. The identification shall include the contracting agency, the contractors name and the contract number. This identification shall be placed on the back of all signs.

40. The Permittee shall, at its own expense, be under absolute obligation to determine the location of and provide protection from damage or loss for all subsurface facilities and overhead structures in the permit area. In the event of any damage or loss to such subsurface facilities and overhead structures, the Permittee shall promptly replace or repair such facilities and structures, as directed by the New York City Department of Transportation or other City agency having jurisdiction thereof or by the owner thereof.

41. The City makes no representation as to the character of the fill in the streets, and voids therein, or the condition of the sidewalks. The Permittee accepts full responsibility and liability for any disturbance or damage, which may be caused to adjoining pavements, sidewalks or structures by or in connection with the permit activity. All damaged sidewalk or roadway pavements shall be restored (to the nearest full flag for sidewalks) in conformance with the Standard Specifications of the New York (City/State) Department of Transportation.

42. The Permittee shall furnish and install tarpaulins enclosing the immediate site of his cleaning and painting operations to insure complete protection of the general public and property, both on and below the roadway against possible damage from scraping, paint drippings, windblown paint, dust, concrete, etc. This permit does not constitute approval of either painting or paint removal methodology. All signs and signals shall be protected daily with clean and transparent coverings.

43. The washing of concrete truck drums within the Arterial Highway or city street right - of - way is strictly prohibited unless the contractor utilizes the New York State approved method.

44. When water is being used at the work site for any purpose (i.e. concrete curing, saw cutting, etc.), the Permittee is required to insure, through any and all appropriate measures, that the water does not freeze on the roadway or sidewalks. The Permittee will be responsible to maintain a clear and safe travel path.

45. The Permittee's vehicles shall not exceed the posted weight and/or height restrictions for any street, highway, bridge or viaduct section that he/she must travel upon.

46. During the snow season, the contractor shall be required to post “LIFT PLOW” signs at all locations (in both directions if necessary) where they have installed steel plates.

47. Roads used for the hauling of materials shall be kept free from debris and maintained by the Permittee and left in a condition satisfactory to the engineer-in- charge (EIC).

48. On roadways/streets where rush-hour parking and/or standing regulations are posted, the Permittee shall modify his schedule to conform to those (rush hour) restrictions.

49. The Permittee shall not park his equipment or store material overnight where it is deemed to be a safety hazard to the traveling public.

50. The Permittee shall not obstruct fire hydrants, crosswalks, pedestrian ramps, fire alarm boxes, bus stops or any public utility while performing his/her work. The Permittee may not move or remove

"Bus Stop" signs without prior written approval from both the New York City Department of Transportation and the New York City Transit.

51. This is not a Parking Permit. The Permittee shall obey all traffic laws and regulations.

52. This Permit may be amended to cover new or unforeseen conditions at the discretion of the New York City Department of Transportation, after consultation with the Permittee. The New York City Department of Transportation reserves the right to cancel this permit at any time for any valid reason.

53. This Permit, unless terminated at the discretion of the New York City Department of Transportation, will expire on xxxxx.

Edward D. Campbell, 10.1.2020

APPROVED: _____
Jay Jaber, P.E.
Assistant Commissioner
Permit Management and Construction Control

_____
Mihir Shah, PE
Director, Coastal Resiliency NYC

SE: OCMC-Highway; s. Edward; sedward@dot.nyc.gov

CC: Campbell, Dagher, Maniscalco, Edward, Situation Room, Police Dept. (Traffic Division), Fire Department, Litigation Support, HIQA – Highway Unit 55 Water Street 7th Fl. CC file, Project file.

HAZ - PAGES

SPECIFICATIONS FOR HANDLING, TRANSPORTATION AND DISPOSAL OF NONHAZARDOUS AND POTENTIALLY HAZARDOUS CONTAMINATED MATERIALS

NOTICE

THE PAGES CONTAINED IN THIS SECTION ARE ISSUED FOR THE PURPOSE OF SPECIFYING THE REQUIREMENTS OF THE CONTRACT DOCUMENTS AND ARE MADE PART OF SAID CONTRACT DOCUMENTS.

(NO TEXT ON THIS PAGE)

TABLE OF CONTENTS

SECTION ESCR 8.01 Handling, Transporting, and Disposal of Potential and Identified Contaminated and Hazardous Materials *1*
SECTION ESCR 8.01 C1 – Handling, Transportation, and Disposal of Non-Hazardous Contaminated Soil *6*
SECTION ESCR 8.01 C2 – In-Situ and Ex-Situ Soil Sampling and Analysis for Waste Disposal Parameters *13*
SECTION ESCR 8.01 H – Handling, Transportation, and Disposal of Hazardous Soils *16*
SECTION ESCR 8.01 S – Health and Safety *22*
SECTION ESCR 8.01 W1 – Removal, Treatment, and Disposal / Discharge of Contaminated Water *27*
SECTION ESCR 8.01 W2 –Sampling and Testing of Contaminated Water *33*

(NO TEXT ON THIS PAGE)

SECTION ESCR 8.01 HANDLING, TRANSPORTING, AND DISPOSAL OF POTENTIAL AND IDENTIFIED CONTAMINATED AND HAZARDOUS MATERIALS

8.01.1. DESCRIPTION. This Section provides common references and requirements for **Sections 8.01 C1**, **8.01 C2**, **8.01H**, **8.01S**, **8.01W1**, and **8.01 W2**.

8.01.2. MATERIALS. None.

8.01.3. METHODS.

(A) Current New York City Department of Environmental Protection (NYCDEP) Limitations for Discharge to Sewer provided below. The Contractor is responsible to adhere to any updates to the NYCDEP Limitations for Discharge to Sewer.

NYCDEP Bureau of Wastewater Treatment – Limitations for Effluent to Sanitary or Combined Sewers

Parameter[1]	Daily Limit	Units	Sample Type	Monthly Limit
Non-polar material[2]	50	mg/l	Instantaneous	---
pH	5-11	SU's	Instantaneous	---
Temperature	< 150	Degree F	Instantaneous	---
Flash Point	> 140	Degree F	Instantaneous	---
Cadmium	2 0.69	mg/l mg/l	Instantaneous Composite	--- ---
Chromium (VI)	5	mg/l	Instantaneous	---
Copper	5	mg/l	Instantaneous	---
Lead	2	mg/l	Instantaneous	---
Mercury	0.05	mg/l	Instantaneous	---
Nickel	3	mg/l	Instantaneous	---
Zinc	5	mg/l	Instantaneous	---
Benzene	134	ppb	Instantaneous	57
Carbontetrachloride	---	---	Composite	---
Chloroform	---	---	Composite	---
1,4 Dichlorobenzene	---	---	Composite	---
Ethylbenzene	380	ppb	Instantaneous	142
MTBE (Methyl-Tert-Butyl-Ether)	50	ppb	Instantaneous	---
Naphthalene	47	ppb	Composite	19
Phenol	---	---	Composite	---
Tetrachloroethylene (Perc)	20	ppb	Instantaneous	---
Toluene	74	ppb	Instantaneous	28
1,2,4 Trichlorobenzene	---	---	Composite	---
1,1,1 Trichloroethane	---	---	Composite	---
Xylenes (Total)	74	ppb	Instantaneous	28
PCB's (Total)[3]	1	ppb	Composite	---
Total Suspended Solids (TSS)	350[4]	mg/l	Instantaneous	---
CBOD[5]	---	---	Composite	---
Chloride[5]	---	---	Instantaneous	---
Total Nitrogen[5]	---	---	Composite	---
Total Solids[5]	---	---	Instantaneous	---

Notes for table above:

1 All handling and preservation of collected samples and laboratory analyses of samples must be performed in accordance with 40 C.F.R. pt. 136. If 40 C.F.R. pt. 136 does not cover the pollutant in question, the handling, preservation, and analysis must be performed in accordance with the latest edition of "Standard Methods for the Examination of Water and Wastewater." All analyses must be performed using a detection level less than the lowest applicable regulatory discharge limit. If a parameter does not have a limit, then the detection level is defined as the least of the Practical Quantitation Limits identified in NYSDEC's Analytical Detectability and Quantitation Guidelines for Selected Environmental Parameters, December 1988

2 Analysis for ***non-polar materials*** must be done by USEPA method 1664 Rev. A. Non-Polar Material will mean that portion of the oil and grease that is not eliminated from a solution containing N–Hexane, or any other extraction solvent the USEPA will prescribe, by silica gel absorption.

3 Analysis for PCBs is required if ***both*** conditions listed below are met:
1) if proposed discharge ≥ 10,000 gpd;
2) if duration of a discharge > 10 days.
Analysis for PCBs must be done by USEPA method 608 with MDL=<65 ppt. PCB's (total) is the sum of PCB-1242 (Arochlor 1242), PCB-1254 (Arochlor 1254), PCB-1221 (Arochlor 1221), PCB-1232 (Arochlor 1232), PCB-1248 (Arochlor 1248), PCB-1260 (Arochlor 1260) and PCB-1016 (Arochlor 1016).

4 For discharge ≥ 10,000 gpd, the TSS limit is 350 mg/l. For discharge < 10,000 gpd, the limit is determined on a case by case basis.

5 Analysis for Carbonaceous Biochemical Oxygen Demand (CBOD), Chloride, Total Solids and Total Nitrogen are required if proposed discharge ≥ 10,000 gpd.

(B) Applicable Regulations

Applicable regulations include, but are not limited to:

1. 49 CFR 100 to 179 - DOT Hazardous Materials Transport and Manifest System Requirements
2. 6 NYCRR 375-6 - NYSDEC Remedial Program Soil Cleanup Objectives
3. 6 NYCRR 360-1 NYSDEC Solid Waste Management Facilities
4. 6 NYCRR 364- Waste Transporter permits
5. Local restrictions on transportation of waste/debris
6. 40 CFR 260 to 272 - Hazardous Waste Management (RCRA)
7. 6 NYCRR 371 - Identification and Listing of Hazardous Wastes
8. 6 NYCRR 372 - Hazardous Waste Manifest System and Related Standards for Generators, Transporters and Facilities
9. 6 NYCRR 373-1 - Hazardous Waste Treatment, Storage and Disposal Facility Permitting Requirements
10. 6 NYCRR 376 - Land Disposal Restrictions
11. Posted weight limitations on roads or bridges
12. Transportation Skills Programs, Inc. 1985 - Hazardous Materials and Waste Shipping Papers and Manifests
13. Other local restrictions on transportation of waste/debris
14. Occupational Safety and Health Administration (OSHA), Standards and Regulations, 29 CFR 1910 (General Industry)

15. OSHA 29 CFR 1910.120 Hazardous Waste Operations and Emergency Response
16. OSHA Safety and Health Standards 29 CFR 1926 (Construction Industry)
17. OSHA 29 CFR 1910.146 Confined Space Entry Standard
18. Standard Operating Safety Guidelines, USEPA Office of Emergency and Remedial Response Publication, 9285.1-03
19. NIOSH / OSHA / USCG / USEPA Occupational Safety and Health Guidance Manual for Hazardous Waste Site Activities (1986)
20. U.S. Department of Health and Human Services (DHHS) "NIOSH Sampling and Analytical Methods," DHHS (NIOSH) Publication 84-100
21. ANSI, Practice for Respiratory Protection, Z88.2 (1980)
22. ANSI, Emergency Eyewash and Shower Equipment, Z41.1 (1983)
23. ANSI, Protective Footwear, Z358.1 (1981)
24. ANSI, Physical Qualifications for Respirator Use, Z88.6 (1984)
25. ANSI, Practice for Occupational and Educational Eye and Face Protection, Z87.1 (1968)
26. Water Pollution Control Federation "Manual of Practice No. 1, Safety in Wastewater Works"
27. NFPA No. 327 "Standard Procedures for Cleaning and Safeguarding Small Tanks and Containers"
28. Occupational Safety and Health Act Confined Space Entry Standard 29 CFR 1910.146.87
29. Department of Transportation 49 CFR 100 through 179
30. Department of Transportation 49 CFR 387 (46 FR 30974, 47073)
31. Environmental Protection Agency 40 CFR 136 (41 FR 52779)
32. Environmental Protection Agency 40 CFR 262 and 761
33. Resource Conservation and Recovery Act (RCRA)
34. Any transporter of hazardous or non-hazardous materials must be licensed in the State of New York and all other states traversed in accordance with all applicable regulations.

(C) Definitions

Contaminated Groundwater and Decontamination Fluids: Groundwater within the excavation trench or decontamination water that contains regulated compounds above the NYCDEP Discharge to Sewer Effluent limits.

Disposal or Treatment Facility: A facility licensed to accept either non-hazardous regulated waste or hazardous waste for either treatment or disposal.

Exclusion Zone: Work area that will be limited to access by Contractor personnel specifically trained to enter the work area only. The exclusion zone will be set up to secure the area from the public and untrained personnel. The project health and safety program will apply to all construction personnel including persons entering the work area.

Hazard Assessment: An assessment of any physical hazards that may be encountered on a work site.

Hazardous Soils: Soils that exhibit any of the characteristics of a hazardous waste, namely ignitability, corrosivity, reactivity, and toxicity, as defined in 6 NYCRR Part 371, Section 371.3 and 40 CFR Section 261.

Hazardous Substance Evaluation: An evaluation of the possible or known presence of any hazardous substances that may be encountered on a job site. This evaluation is included in the Health and Safety Plan and will include the identification and description of any hazardous substances expected to be encountered. Material Safety Data Sheets (MSDS) will be included for each substance.

Health and Safety Plan: A plan employed at a work site that describes all the measures that will be taken to assure that all work is conducted in a safe manner, and that the health of the workers and the public will be insured.

Material Handling Plan: A plan outlining the methods that will be employed to handle, transport and dispose of contaminated materials.

Manufactured Gas Plant Contaminated Soils: Soils producing higher than background responses on a photoionization detector, creosote-like odor, visual impacts (e.g., staining or discoloration), proximity to known releases from historic Manufactured Gas Plant facilities, and exceed the soil cleanup levels for naphthalene and other volatile organic compounds (VOCs) and semivolatile organic compounds (SVOCs) exceeding 6 NYCRR Part 375 NYSDEC SCOs.

MGP Mitigation Work Plan: A plan approved by NYSDEC, which includes a system of recovery wells and procedures to minimize the migration of Manufactured Gas Plant-related wastes during and after construction.

Non-Hazardous Contaminated Soils: Soils which exhibit a distinct chemical or petroleum odor, or exhibit elevated photoionization detector readings but are not classified as hazardous waste under 6 NYCRR Part 371, Section 371.3 and 40 CFR Section 261.

New York State Health Department's Environmental Laboratory Approval Program: A program by which the state of New York approves and accredits environmental testing laboratories.

PCBs: Polychlorinated biphenyls are a group of toxic compounds commonly used as a coolant in transformers and other electrical components.

Photoionization Detector: A hand held instrument used to measure volatile organic compounds in air. The instrument ionizes the organic molecules through the use of an ultraviolet lamp.

RCRA Hazardous Waste Characteristics: Characteristics of a material which may indicate the material is hazardous. These include: ignitability corrosivity, reactivity, and toxicity.

Remedial Action Plan: A plan approved by NYCDEP outlining procedures for managing soil and groundwater during subsurface disturbance and includes guidelines for the import and export of soil/fill materials.

Total Petroleum Hydrocarbons: An analytical procedure used to determine the total amount of petroleum compounds in a material.

Waste Management Plan for MGP-Related Contamination: A plan approved by NYSDEC specifically addressing the management and handling of soil and groundwater impacted by Manufactured Gas Plant-related wastes.

(D) Phase I and Phase II Investigation Reports

1. East Side Coastal Resiliency Project Area One: Subsurface Exploration Report - Borough of Manhattan, New York, prepared by AKRF under the Hazen and Sawyer / AKRF-JV, October 2015, 8,555 Pages.

2. East Side Coastal Resiliency Project Area Two: Subsurface Exploration Report - Borough of Manhattan, New York, prepared by AKRF under the Hazen and Sawyer / AKRF-JV, October 2015, 3,145 Pages.

3. East Side Coastal Resiliency: Supplemental Subsurface Investigation Report - Borough of Manhattan, New York, prepared by AKRF under the Hazen and Sawyer / AKRF-JV, November 2016, 12,342 Pages.

4. East Side Coastal Resiliency, Parallel Conveyance & Isolation Gates: Environmental Subsurface Investigation Report - Borough of Manhattan, New York, prepared by AKRF under the AKRF-KSE JV, January 2019, 2,221 Pages.

5. East Side Coastal Resiliency: Supplemental Subsurface Investigation Report - Borough of Manhattan, New York, prepared by AKRF under the Hazen and Sawyer / AKRF-JV, August 2019, 2,161 pages.

8.01.4. MEASUREMENT AND PAYMENT. No separate payment will be made for complying with the requirements of this Section.

SECTION ESCR 8.01 C1 – HANDLING, TRANSPORTATION, AND DISPOSAL OF NON-HAZARDOUS CONTAMINATED SOIL

8.01 C1.1. WORK TO INCLUDE

(A) General

This work will consist of the handling, transportation, and disposal of contaminated soils. The materials covered by this specification are soils that are contaminated with petroleum, manufactured gas plant (MGP) wastes, or chemical products but cannot be classified as hazardous waste. For the purpose of this specification, soil will be defined as any material excavated below the pavement (concrete and/or asphalt) and pavement base (concrete and/or asphalt).

Soil to be excavated can be classified as non-contaminated, contaminated, or hazardous soil. Non-contaminated soils are defined as soils not exhibiting any of the following characteristics.

- Exceedances of New York State Department of Environmental Conservation (NYSDEC) Part 375-6 Restricted Commercial Soil Cleanup Objectives (SCOs) for street work, Restricted Residential SCOs for work areas in parkland, or Residential SCOs for housing projects.
- Elevated Photo-Ionization Detector (PID) readings, subsequently confirmed by laboratory analysis and showed exceedances of applicable SCOs.
- Visual evidence of contamination, such as the presence of staining, discoloration.
- Petroleum, MGP waste, and/or chemical odors, subsequently confirmed by laboratory analysis and showed exceedances of applicable SCOs.
- Physical evidence of coal ash, municipal solid waste, construction and demolition debris, or dredged spoils.

Contaminated soils are defined as soils exhibiting one or more of the above characteristics. Contaminated soils must be handled, transported, and disposed of in accordance with the specifications for **Section ESCR 8.01 C1**.

Hazardous soils are defined as soils showing exceedances of Toxicity Characteristic Leaching Procedure (TCLP) or ignitability, corrosivity, or reactivity Regulatory Levels for Hazardous Waste published in Resource Conservation and Recovery Act (RCRA), 6 New York Codes, Rules, and Regulations (NYCRR) Part 371, or 40 Code of Federal Regulations (CFR) Section 261. Hazardous soils must be handled, transported, and disposed of in accordance with the specifications of this section.

Non-contaminated soil can be reused at the project site with prior approval by the Engineer, provided it meets other contract requirements. Soil reused on-site must be (1) below a structure; (2) beneath a roadbed or other paved area; or (3) in any unpaved areas, either beneath the soil cap. Soil reused for the soil cap must meet the criteria for fill and backfill as required in ESCR 4.11 - Excavation and Filling and the RAP. Excess non-contaminated soil becomes the property of the Contractor.

The Contractor must ensure that all operations associated with the handling, sampling, loading, transportation, and disposal of contaminated soils are in compliance with all applicable Federal, State, and City statutes and regulations.

The Contractor must supply all equipment, material and labor required to conduct the specified work of this Section. The Contractor must document the excavation, handling, transportation and disposal of contaminated soils.

(B) Request for Approval of Subcontractors

The Engineer must then submit the original RFAS to DDC Safety and Site Support, Office of Environmental and Geotechnical Services (OEGS) for review and approval. If the RFAS is denied by OEGS, OEGS will issue the final denial and return the original RFAS to the Engineer. If the RFAS is approved by OEGS, OEGS will forward the original RFAS package and an approval memo to the DDC ACCO for further review and approval. The ACCO's Vendor Integrity Unit and Office of Contract Opportunity (OCO) will review the subcontractor/subconsultant's overall business integrity and compliance with Vendor Exchange System (VENDEX), Executive Order 50, Local Law 1, and Minority- and Women-Owned Business Enterprise/ Disadvantaged Business Enterprise (MWBE/DBE) participation as per the contract. ACCO will issue the final Approval or Denial. The original RFAS will be returned to the Engineer, who will subsequently notify and return the original RFAS to the Contractor.

(C) Independent Environmental Consultant

The Contractor must retain an independent Environmental Consultant to obtain all permits, prepare the plans required in the specification 8.01, and perform, sampling, and other health and safety services. The independent Environmental Consultant must be approved under the RFAS process and must demonstrate the minimum requirements as set forth below:

1. The independent Environmental Consultant project supervisor on site and other designated key personnel must have a minimum of three (3) years of experience in the environmental field dealing with issues associated with contaminated soils, specifically volatile organic compounds and MGP-related contamination.
2. The independent Environmental Consultant must be experienced in work of similar nature, size, and complexity and must have previous experience in working with DDC.
3. The independent Environmental Consultant must furnish a project listing identifying the location, nature of services provided, owner, owner's contact, contact's working telephone number, project duration and value for at least five (5) projects within the last 3 years.

(D) Sampling and Analysis

Prior to the performance of soil sampling, the Contractor will submit a Field Sampling Plan (FSP). Soil sampling must not be conducted until OEGS has approved the FSP. The Contractor must conduct sampling and analysis of the impacted soils as specified under **Section 8.01 C2**. The laboratory results must be forwarded to OEGS for review to determine if the soils would be handled and disposed of as contaminated soils or hazardous soils.

(E) Material Handling Plan

At least 45 days prior to the commencement of work, the Contractor must submit to the OEGS for review a Material Handling Plan (MHP). The MHP must be approved by the OEGS prior to the Contractor beginning any soil excavation work. The MHP must, at a minimum, consist of:

1. The Contractor's procedures for safely handling contaminated soils. The procedures must include personnel safety and health as well as environmental protection considerations.
2. For the proposed laboratory for analysis of representative soil samples, provide the following: (a) name, (b) address, (c) telephone number, and (d) New York State Department of Health's (NYSDOH) Environmental Laboratories Accreditation Program (ELAP) status.
3. Identification of the Contractor's proposed waste transporter(s) (hauler). This information must include:
    1. Name and Waste Transporter Permit Number
    2. Address

3. Name of responsible contact for the waste transporter
4. Telephone number for the contact
5. All necessary permit authorizations for each type of waste transported
6. Previous experience in performing the type of work specified herein

4. The name and location of the facility where an off-site scale is located. The Contractor must outline the procedures on controlling trucks leaving the work site and en-route to the off-site scale.

5. All staging/stockpiling areas (if stockpiling areas are intended and available), or alternate procedures that will be used. Alternate procedures may include, but are not limited to, agreements from the intended disposal facilities to accept boring data and/or analytical data previously obtained during the site characterization so that materials may be directly loaded into vehicles for shipment to the disposal facility.

6. A backup facility must be provided, should the staging/stockpile areas become unavailable, insufficient in area or presented by some other unforeseen difficulty.

7. Identification of the Contractor's two proposed Treatment Storage or Disposal (TSD) facilities for contaminated soils (primary and back-up) for final disposal of the soils. Both primary and backup TSD facilities must be currently state-licensed disposal facilities approved to receive contaminated soil. The information required for each facility must include:

   a. General Information
      1. Facility name and the State identification number
      2. Facility location
      3. Name of responsible contact for the facility
      4. Telephone number for contact
      5. Signed letter of agreement to accept waste as specified in this contract. The letter must indicate agreement to handle and accept the specified estimated quantities and types of material during the time period specified in the project schedule and any time extension as deemed necessary.
      6. Unit of measure utilized at disposal facility for costing purposes
   b. A listing of all permits, licenses, letters of approval, and other authorizations to operate, which are currently held and valid for the proposed facility.
   c. A listing of all permits, licenses, letters of approval, and other authorizations to operate which have been applied for by the proposed facility but not yet granted or issued.
   d. The Contractor must specify and describe the disposal/containment unit(s) that the proposed facility will use to manage the waste. The Contractor must identify the capacity available in the units and the capacity reserved for the subject waste.
   e. The Contractor must provide the date of the proposed facility's last compliance inspection.
   f. A list of all active (unresolved) compliance orders (or agreements), enforcement notices, or notices of violations issued to the proposed facility must be provided. The source and nature of the cause of violation must be stated, if known.

8. Description of all sampling and field/laboratory analyses that will be needed to obtain disposal facility approval.

8.01 C1.2. MATERIALS

(A) The Contractor must provide containers as specified in the United States Department of Transportation (USDOT) regulations.

(B) The Contractor must provide polyethylene sheeting, which is to be placed under (20 mil. thickness minimum) and over (10 mil. thickness minimum) soil piles.

(C) The Contractor must provide Portland cement as a soil amendment to stabilize wet soil that is determined by the Engineer to be impacted by MGP wastes prior to shipping for off-site disposal.

(D) The Contractor must assure that the waste transporter's appropriate choice of vehicles and operating practices are fitted to prevent spillage or leakage of contaminated material during transportation.

(E) The Contractor must provide, install, and maintain any temporary stockpiling or loading facilities on site as required until completion of material handling activities. The location and design of any such facilities must be included in the MHP.

8.01 C1.3. CONSTRUCTION DETAILS

(A) Material Handling

1. Immediately after excavation of non-hazardous contaminated soil the Contractor must:
   a. Stabilize wet soil determined by the Engineer to be impacted with MGP wastes with Portland cement as a soil amendment prior to soil waste disposal. The Contractor is responsible for determining the appropriate percent of Portland cement required to stabilize the soil. It is anticipated that stabilization will require a minimum of 5% Portland cement. Dosage of Portland cement shall be no greater than 25% by wet weight;
   b. Load material directly onto trucks/tankers/roll offs for disposal off site; or
   c. If interim stockpiling is required, place contaminated soil on a minimum of 20 mil. polyethylene sheeting and cover it securely by minimum of 10 mil. polyethylene sheeting to protect against cross contamination, airborne dust, leaching or runoff of contaminants into the subsurface, groundwater, or stormwater. Weight or secure the sheeting by appropriate means and seal seams as approved by the DDC to prevent tearing or removal by wind or weather. Grade surrounding surface to provide for positive drainage away from pile. Each stockpile must not exceed 500 cubic yards unless otherwise approved by the Engineer. Contaminated soils must be stockpiled separately from uncontaminated and hazardous soil at an off-site location approved by DDC or secured on-site by the Contractor, meeting all required Federal, State and Local stipulations. Stockpiles must be at least 800 feet away from any sensitive receptors, such as schools, daycare center, hospitals, nursing homes, etc., and at least 100 feet away from any water body, unless otherwise coordinated with the Engineer.
2. Institute appropriate procedures and security measures to ensure the protection of site personnel and the public from contaminated materials as described in the approved MHP, Site HASP, and **Section 8.01 S - Health and Safety**.
3. Petroleum contaminated, MGP contaminated, and non-hazardous soils must be segregated separately when stockpiling.
4. Any soil encountered that appears to contain unknown contaminants (based on visual, odor, or other observation), or that vary substantially from the material originally identified must be segregated in stockpiles and the Contractor's independent Environmental Consultant promptly notified to collect soil samples for analysis. Construct stockpiles to the same requirements as stated in subsection (A).(1).(b) above.

5. Provide any dewatering that is necessary to complete the work. Contaminated water must be disposed of in accordance with **Section 8.01 W1**.

(B) Off-Site Transportation to Disposal Facility

1. General

   a. The Contractor must furnish all labor, equipment, supplies and incidental costs required to transport contaminated material from the work area to the off-site disposal facility, and any other items and services required for transporting contaminated material for disposal at an off-site facility.

   b. The Contractor will be responsible for tracking all materials and vehicles from the site to the off-site scale.

   c. The Contractor must submit to the Engineer the certified tare and gross weight slips for each load received at the accepted facility which must be attached to each returned manifest. These documents must be maintained and kept with project field records.

   d. Contaminated soils must be delivered to the disposal or treatment facility within 30 calendar days after excavation.

   e. The Contractor must coordinate the schedule for truck arrival and material deliveries at the job site to meet the approved project schedule.

   f. The Contractor must inspect all vehicles leaving the project site to ensure that contaminated soils adhering to the wheels or undercarriage are removed prior to the vehicle leaving the site.

   g. The Contractor must obtain letters of commitment from the waste haulers and the TSD facility to haul and accept shipments.

   h. The Contractor must provide waste profile forms to OEGS for review and approval before transporting contaminated soil to the approved TSD facility.

2. Hauling

   a. The Contractor must coordinate manifesting, placarding of shipments, and vehicle decontamination. All quantities must be measured and recorded upon arrival at the disposal facility. If any deviation between the two (2) records occurs, the matter is to be reported immediately to the Engineer and to be resolved by the Contractor to the satisfaction of the Engineer.

   b. The Contractor will be held responsible, at its own cost for any and all actions necessary to remedy situations involving material spilled in transit or mud and dust tracked off-site.

   c. The Contractor must ensure that trucks are protected against contamination by properly covering and lining them with polyethylene sheeting or by decontaminating them prior to and between acceptances of loads. Trucks with loaded contaminated soil must be covered securely with tarps before leaving the project site to prevent generation of airborne dust during hauling. When loading soil determined by the Engineer to be impacted by MGP wastes, the Contractor must use impermeable, tight fitting truck covers. The Contractor must install and maintain a truck tracking pad to limit the amount of sediment that is transported from the site by vehicles. The truck tracking pad should be at least 24 feet wide and 50 feet long, and constructed of 3-6 inch washed stone with a depth of at least 12 inches. When working in areas determined to be impacted by MGP wastes by the Engineer, the truck tracking pad

must additionally include liner(s) and a sump for decontaminating all vehicles leaving the site, and all decontamination fluids will be containerized for disposal.

d. The Contractor will be responsible for inspecting the access routes for road conditions, overhead clearance, and weight restrictions.

e. The Contractor must only use the transporter(s) identified in the approved MHP for the performance of work. A revised MHP or an addendum to the original approved MHP must be submitted to OEGS for review and approval at no additional cost to the City for any use of substitute or additional transporters.

f. The Contractor must develop, document, and implement a policy for accident prevention.

g. The Contractor must not combine contaminated materials from other projects with material from this project.

h. No material will be transported until approval by the Engineer is obtained.

3. Off-Site Disposal

a. The Contractor must use only the disposal facility(ies) identified in the approved MHP for the performance of the work. A revised MHP or an addendum to the original approved MHP must be submitted to OEGS for review and approval at no additional cost to the City for any use of substitutions or additions of disposal facility.

b. The Contractor must be responsible for acceptance of the materials at an approved facility, for ensuring that the facility is properly permitted to accept the stated materials, and for ensuring that the facility provides the stated treatment and/or disposal services.

c. The City reserves the right to contact and visit the TSD facility and regulatory agencies to verify the agreement to accept the stated materials and to verify any other information provided.

d. In the event that the identified and approved facility ceases to accept the stated materials or the facility ceases operations, it is the Contractor's responsibility to locate an alternate approved and permitted facility(ies) for accepting materials. The alternate facility(ies) must be approved in writing by the Engineer in the same manner and with the same requirements as for the original facility(ies). This must be done at no extra cost or delay to the City.

e. The Contractor must obtain manifest forms and complete the shipment manifest records required by the appropriate regulatory agencies for verifying the material and quantity of each load in unit of volume and weight. Copies of each manifest must be submitted to the Engineer within four (4) business days following shipment, and within three (3) business days after notification of receipt of the facility. The signed manifests must be maintained and kept with the project field records. Any manifest discrepancies must be reported immediately to the Engineer and be resolved by the Contractor to the satisfaction of the Engineer.

4. Equipment and Vehicle Decontamination

a. The Contractor must design and construct a portable decontamination station to be used to decontaminate equipment and vehicles that have been used to handle contaminated soil. The cost for this work will be paid under Item ESCR-8.01 S.

b. Water generated during the decontamination process must be disposed of in accordance with **Section 8.01 W1**.

8.01 C1.4 METHOD OF MEASUREMENT

Quantities for contaminated soils will be measured in tons. The tonnage will be determined by off-site truck scales, as per Subsection 8.01 C1.(3).(B).(1), that are capable of generating load tickets.

8.01 C1.5 PRICE TO COVER

(A) The unit bid price per ton for Item ESCR-8.01 C1 must include the cost of furnishing all labor, materials, equipment, plan, and insurance for excavation, handling, transportation, disposal, documentation, fees, permits, loading, stockpiling, hauling, and any other incidentals necessary to complete all the work as specified herein for handling, transporting, and disposal of non-hazardous contaminated soil.

(B) The unit bid price per ton for Item ESCR-8.01 C1MGP must include the cost of furnishing all labor, materials, equipment, plan, and insurance for excavation, handling, transportation, disposal, documentation, fees, permits, loading, stockpiling, hauling, and any other incidentals necessary to complete all the work as specified herein for handling, transporting, and disposal of non-hazardous MGP contaminated soil

(C) Final disposal of hazardous soil will be paid for under Item ESCR-8.01 H – Handling, Transporting and Disposal of Hazardous Soils. Disposal of decontamination water will be paid for under Item ESCR-8.01 W1 – Removal, Treatment and Discharge/Disposal of Contaminated Water.

(D) Backfill will be paid for under its respective item as specified in the contract document.

(E) The independent Environmental Consultant will be paid under Item ESCR-8.01 S – Health and Safety.

Payment will be made under:

Item No.	Description	Pay Unit
ESCR 8.01 C1	HANDLING, TRANSPORTING, AND DISPOSAL OF NON-HAZARDOUS CONTAMINATED SOIL	TONS
ESCR 8.01 C1MGP	HANDLING, TRANSPORTING, AND DISPOSAL OF NON-HAZARDOUS MGP CONTAMINATED SOIL	TONS

SECTION ESCR 8.01 C2 – IN-SITU AND EX-SITU SOIL SAMPLING AND ANALYSIS FOR WASTE DISPOSAL PARAMETERS

8.01 C2.1 WORK TO INCLUDE

(A) Description

The work will consist of collecting and analyzing representative samples of soil to be excavated in-situ and/or ex-situ from stockpiles for parameters typically requested by the disposal facilities to determine if the soil to be excavated is suitable for reuse, or to be hauled off-site for disposal purposes as contaminated and/or hazardous soil.

(B) Sampling and Laboratory Analysis

1. At least forty-five (45) days prior to the commencement of work, the Contractor's independent Environmental Consultant must submit an FSP and an Investigation Health and Safety Plan (Investigation HASP) to OEGS for review and approval, prior to conducting the field sampling. The FSP must include, at a minimum, the following information:

   a. Project information
   b. Description of sample collection methodology for soil to be excavated and soil which appears to contain unknown contaminants based on field observation
   c. Type of analyses
   d. Sample preservation and handling
   e. Training and experience of the personnel who will collect the samples
   f. Equipment Decontamination
   g. Analytical laboratory's name, address, New York State Department of Health's ELAP certification number, and telephone number
   h. Map of the project area
   i. Sample location plan
   j. Chain of Custody

   The Investigation HASP must identify actual and potential hazards associated with planned sampling field activities and stipulate appropriate health and safety procedures, so as to minimize field personnel exposures to physical, biological, and chemical hazards that may be present in the sampling media. The Investigation HASP must include, at a minimum, the following information:

   a. Project information
   b. Description of work to be performed
   c. Names of responsible health and safety personnel
   d. Worker training
   e. Job hazard analysis
   f. Confined Space Entry Plan (if applicable)
   g. Personal monitoring (if applicable)
   i. Personnel Protection Equipment (PPE)
   j. Decontamination
   k. Safety rules
   l. Spill prevention and control, dust control, vapor/odor suppression procedures
   m. Identification of nearest hospital and route
   n. Emergency Incident Reporting

2. The Contractor's Environmental Consultant must collect one (1) grab and one (1) composite sample per 500 cubic yards of soil to be excavated in-situ and/or ex-situ from

stockpiles. Sample locations must be placed throughout along the project area. For in-situ sampling, each grab soil sample must be collected from either the 6-inch interval above the water table (when encountered) or the 6-inch interval above the bottom of the proposed excavation depth (where recovery allowed), or from the 6-inch interval showing the highest potential for contamination based on field observation. For composite soil sampling, grid sampling must be performed for projects with excavation depth deeper than six (6) feet below grade. Each composite sample must consist of five (5) grab samples collected from various intervals along the depth of excavation at each sampling location. For stockpiled soils, each composite sample must consist of five (5) grab samples collected from various depths within each soil stockpile, at least two feet below the soil surface. For drummed soil, one (1) composite sample per 10 drums must be collected. Each composite soil sample must consist of one (1) grab sample from each of the 10 drums.

3. The quality of the data from the sampling program is the Contractor's responsibility. The Contractor must furnish all qualified personnel, materials, equipment and instruments necessary to carry out the sampling. Unless directed otherwise, all sampling procedures must follow the NYSDEC sampling guidelines and protocols. All sampling must be conducted by a qualified person trained in sampling protocols using standard accepted practices for obtaining representative samples.

4. Each grab and composite sample must be analyzed for all parameters required by disposal facilities accepting contaminated and hazardous soil.

5. All sample containers must be marked and identified with legible sample labels, which must indicate the project name, sample location and/or container, the sample number, the date and time of sampling, preservatives utilized and other information that may be useful in determining the character of the sample. Chain-of-custody must be tracked from laboratory issuance of sample containers through laboratory receipt of the samples.

6. The Contractor must maintain a bound sample logbook. The Contractor must provide the Engineer access to it at all times and must turn it over to the Engineer in good condition at the completion of the work. The following information, at a minimum, must be recorded to the log:

   a. Sample identification number
   b. Sample location
   c. Field observation
   d. Sample type
   e. Analyses
   f. Date/time of collection
   g. Collector's name
   h. Sample procedures and equipment utilized
   i. Date sent to laboratory and name of laboratory

7. The City reserves the right to direct the Contractor to conduct alternative sampling in lieu of the parameters described in subsection 8.01 C2(1)(B)(4), if the situation warrants. The substitute sampling parameters will be of equal or lesser monetary value than those described in subsection 8.01 C2(1)(B)(4), as determined by industry laboratory pricing standards.

8. Only dedicated sampling equipment may be used to collect these samples. All equipment involved in field sampling must be decontaminated before being brought to the sampling location and must be properly disposed of after use.

9. The Contractor's Environmental Consultant must prepare a Field Sampling Result Report (FSSR), tabulate the analytical results, and compare the data to the applicable NYSDEC Part 375.6 Soil Cleanup Objectives, and TCLP for Hazardous Waste published in RCRA and 6 NYCRR Part 371, or 40 CFR Section 261. If the soil is to be disposed of in a disposal facility outside of the State of New York, the soil sampling data must also be compared to the applicable regulatory criteria established by the state in which the disposal facility is located. The FSSR, with the tabulated tables and laboratory analytical data, must be submitted to OEGS for review and approval prior to any soil reuse or disposal activities.
10. Soils exceeding any of the hazardous characteristic criteria meet the legal definition of hazardous soils (rather than non-hazardous contaminated soils) and must be transported or disposed of under **Section 8.01 H**. All analyses must be done by a laboratory that has received approval from the ELAP for the methods to be used. The Contractor must specify the laboratory in the MHP.
11. The Contractor must contact the disposal facility where the waste will be sent for permanent disposal and arrange to collect any additional samples required by the facility. The cost associated with additional sampling and testing must be included in the bid price of this Item.

8.01 C2.2 METHOD OF MEASUREMENT

Quantities for samples must be measured as the number of sets of samples that are tested. A set will be defined as one (1) grab and one (1) composite samples per 500 cubic yards to be analyzed for the full range of parameters as specified in subsection 8.01 C2(1).(B).(4).

8.01 C2.3 PRICE TO COVER

The unit price bid per set for Item ESCR-8.01 C2 will include the cost of furnishing all labor, materials, equipment, plan, and insurance necessary for sampling, handling, transporting, testing, documentation, fees, permits, and any other incidentals necessary to complete the work as specified herein for in-situ and ex-situ soil sampling and analysis for waste disposal parameters.

Payment will be made under:

Item No.	Description	Pay Unit
ESCR 8.01 C2	SAMPLING AND TESTING OF CONTAMINATED/POTENTIALLY HAZARDOUS SOIL FOR DISPOSAL PURPOSES	SETS

SECTION ESCR 8.01 H – HANDLING, TRANSPORTATION, AND DISPOSAL OF HAZARDOUS SOILS

8.01 H.1 WORK TO INCLUDE

(A) General

This work will consist of the handling, transportation, and disposal of hazardous soils, which are defined as soils showing exceedances of TCLP for Hazardous Waste published in RCRA, 6 NYCRR Part 371, or 40 CFR Section 261. Hazardous soil can also be contaminated soils, as defined in **Section 8.01 C1**, but must be handled, transported, and disposed of as hazardous soil under **Section 8.01 H**, in accordance with the specifications herein. For the purpose of this specification, soils will be defined as any materials excavated below the pavement and base for pavement.

The Contractor must ensure that all operations associated with the handling, sampling, loading, transportation, and disposal of hazardous materials are in compliance with the applicable Federal, State, and Local statutes and regulations. The Contractor must supply all equipment, material and labor required to conduct the specified work under this section.

The Contractor must document the excavation, handling, sampling, and testing, transportation, and disposal of hazardous soils. The City must be listed in the disposal documents as the waste generator.

The Contractor must decontaminate all equipment prior to its removal from the exclusion zone and/or following contact with hazardous materials, as detailed in **Section 8.01 S**. Water generated during the decontamination process must be disposed of as detailed in **Section 8.01 W1**.

The Contractor must retain an independent Environmental Consultant, meeting the requirements specified in Section 8.01 C1. The independent Environmental Consultant must conduct sampling for laboratory analysis of soil to be excavated to determine whether the soil is contaminated and/or hazardous.

All work under this section must be performed under the direct supervision of the Contractor's Environmental Consultant, as approved by the OEGS.

(B) Material Handling Plan

At least 45 days prior to the commencement of work, the Contractor must submit to the OEGS for review a MHP. The MHP must be approved by the OEGS prior to the Contractor beginning any soil excavation work. The MHP must, at a minimum, consist of:

1. The Contractor's procedures for identifying hazardous soils during excavation, including the specific model and manufacturer of intended organic vapor monitoring equipment and calibration procedures to be used. It should also include the training and experience of the personnel who will operate the equipment.
2. The Contractor's procedures for safely handling hazardous soils or soils which have not yet been tested but are believed to be potentially hazardous. The procedures must include personnel safety and health as well as environmental protection considerations.
3. Name, address, NYSDOH ELAP status and telephone number of the proposed laboratory for analysis of representative soil samples.
4. Identification of the Contractor's proposed waste transporter(s). This information must include:

a. Name and Waste Transporter Permit Number
b. Address
c. Name of responsible contact for the waste transporter
d. Telephone number for the contact
e. All necessary permit authorizations for each type of waste transported
f. Previous experience in performing the type of work specified herein

5. The name and location of the facility where an off-site scale is located. The Contractor must outline the procedures on controlling trucks leaving the work site and en-route to the off-site scale.

6. All staging/stockpiling areas (if stockpiling areas are intended and available), or alternate procedures that will be used. Alternate procedures may include, but are not limited to, agreements from the intended disposal facilities to accept boring data and/or analytical data previously obtained during the site characterization so that materials may be directly loaded into vehicles for shipment to the disposal facility.

7. A backup facility must be provided, should the staging/stockpile areas become unavailable, insufficient in area or not be present by some other unforeseen difficulty.

8. Identification of the Contractor's two proposed Treatment Storage or Disposal (TSD) facilities for hazardous soils (primary and back-up) for final disposal of the hazardous soils. Both primary and backup TSD facilities must be currently USEPA or State-approved RCRA TSD facilities for hazardous soils. The information required for each facility must include:

   a. General Information
      1. Facility name and the USEPA identification number
      2. Facility location
      3. Name of responsible contact for the facility
      4. Telephone number for contact
      5. Signed letter of agreement to accept waste as specified in this contract. The letter must indicate agreement to handle and accept the specified estimated quantities and types of material during the time period specified in the project schedule and any time extension as deemed necessary.
      6. Unit of measure utilized at disposal facility for costing purposes
   b. A listing of all permits, licenses, letters of approval, and other authorizations to operate, which are currently held and valid for the proposed facility.
   c. A listing of all permits, licenses, letters of approval, and other authorizations to operate which have been applied for by the proposed facility but not yet granted or issued.
   d. The Contractor must specify and describe the disposal/containment unit(s) that the proposed facility will use to manage the waste. The Contractor must identify the capacity available in the units and the capacity reserved for the subject waste.
   e. The Contractor must provide the date of the proposed facility's last compliance inspection under RCRA.
   f. A list of all active (unresolved) compliance orders (or agreements), enforcement notices, or notices of violations issued to the proposed facility must be provided. The source and nature of the cause of violation must be stated, if known.

9. Description of all sampling and field/laboratory analyses that will be needed to obtain disposal facility approval.

8.01 H.2 MATERIALS

(A) The Contractor must provide containers as specified in the USDOT regulations.

(B) The Contractor must provide Portland cement as a soil amendment to stabilize wet soil that is determined by the Engineer to be impacted by MGP wastes prior to shipping the material for off-site disposal.

(C) The Contractor must provide polyethylene sheeting, which is to be placed under (20 mil. thickness minimum) and over (10 mil. thickness minimum) soil piles.

(D) The Contractor must assure that the waste transporter's appropriate choice of vehicles and operating practices are fitted to prevent spillage or leakage of contaminated material during transportation.

(E) The Contractor must provide, install, and maintain any temporary stockpiling or loading facilities on site as required until completion of material handling activities. The location and design of any such facilities must be included in the MHP.

8.01 H.3 CONSTRUCTION DETAILS

(A) Material Handling

1. Immediately after excavation of hazardous soil the Contractor must:
   a. Stabilize wet soil determined by the Engineer to be impacted with MGP wastes with a soil amendment prior to off-site disposal. The Contractor is responsible for determining the appropriate percent of Portland cement required to stabilize the soil. It is anticipated that stabilization will require a minimum of 5% Portland cement. Dosage of Portland cement shall be no greater than 25% by wet weight;
   b. Load material directly onto drums/trucks/tankers/roll offs for disposal off site. Containers must be labeled as hazardous soil while being held for disposal; or
   c. If interim stockpiling is required, place hazardous soil on a minimum of 20 mil. polyethylene sheeting and cover it securely by minimum of 10 mil. polyethylene sheeting to protect against cross contamination, airborne dust, leaching or runoff of contaminants into the subsurface, groundwater, or stormwater. Weight or secure the sheeting by appropriate means and seal seams as approved by the Engineer to prevent tearing or removal by wind or weather. Grade surrounding surface to provide for positive drainage away from pile. Each stockpile must not exceed 500 cubic yards unless otherwise approved by the Engineer. Hazardous soils must be stockpiled separately from uncontaminated and contaminated soil at an off-site location approved by the Engineer or secured on-site by the Contractor, meeting all required Federal, State and Local stipulations. Stockpiles must be labelled as hazardous soil and situated at least 800 feet away from any sensitive receptors, such as schools, daycare center, hospitals, nursing homes, etc., and at least 100 feet away from any water body, unless otherwise coordinated with the Engineer.
2. Institute appropriate procedures and security measures to ensure the protection of site personnel and the protection of the public from hazardous soils as described in the approved MHP, Site HASP, and **Section 8.01 S**.
3. Any soil encountered that appears to contain unknown contaminants (based on visual, odor, or other observation), or that vary substantially from the material originally identified must be segregated in stockpiles and the independent Environmental Consultant promptly notified to collect soil samples for analysis. Construct stockpiles to the same requirements as stated in subsection (A)(1)(b) above.
4. Provide any dewatering that is necessary to complete the work. Contaminated water must be disposed of in accordance with **Section 8.01 W1**.

(B) Off-Site Transportation to Disposal Facility

1. General

   a. The Contractor must furnish all labor, equipment, supplies and incidental costs required to transport contaminated material from the work area to the off-site disposal facility, and any other items and services required for transporting hazardous material for disposal at an off-site facility.

   b. The Contractor is responsible for obtaining the USEPA hazardous waste generator identification number for the City. The application must be submitted to OEGS for review and approval prior to submission to USEPA. The Contractor must prepare the annual hazardous waste report for the project and submit to the NYSDEC and USEPA.

   c. The Contractor will be responsible for tracking all material/vehicles from the site to the off-site scale and to the approved disposal facility.

   d. The Contractor must provide to the Engineer certified tare and gross weight slips for each load received at the accepted facility which must be attached to each returned manifest. These documents must be maintained and kept with project field records.

   e. Hazardous soils must be delivered to the disposal or treatment facility within 30 calendar days after excavation.

   f. The Contractor must coordinate the schedule for truck arrival and material deliveries at the job site to meet the approved project schedule.

   g. The Contractor must inspect all vehicles leaving the project site to ensure that hazardous soils adhering to the wheels or undercarriage are removed prior to the vehicle leaving the site.

   h. The Contractor must obtain letters of commitment from the waste haulers and the TSD facility to haul and accept shipments.

   i. The Contractor must provide waste profile forms to OEGS for review and approval before transporting hazardous soil to the approved TSD facility.

2. Hauling

   a. The Contractor must coordinate manifesting, placarding of shipments, and vehicle decontamination. All quantities must be measured and recorded upon arrival at the disposal facility. If any deviation between the two records occurs, the matter is to be reported immediately to the Engineer and to be resolved by the Contractor to the satisfaction of the Engineer.

   b. The Contractor will be responsible, at its own cost for any and all actions necessary to remedy situations involving material spilled in transit or mud and dust tracked off-site.

   c. The Contractor must ensure that trucks are protected against contamination by properly covering and lining them with polyethylene sheeting or by decontaminating them prior to and between acceptances of loads. Trucks with loaded contaminated soil must be covered securely with tarp before leaving the project site to prevent generation of airborne dust during hauling. When loading soil determined by the Engineer to be impacted by MGP wastes, the Contractor must use impermeable, tight fitting truck covers. The Contractor must install and maintain a truck tracking pad to limit the amount of sediment that is transported from the site by vehicles. The truck tracking pad should be at least 24 feet wide and 50 feet long, and constructed of 3-6

inch washed stone with a depth of at least 12 inches. When working in areas determined to be impacted by MGP wastes by the Engineer, the truck tracking pad must additionally include liner(s) and a sump for decontaminating all vehicles leaving the site, and all decontamination fluids will be containerized for disposal.

d. The Contractor will be responsible for inspecting the access routes for road conditions, overhead clearance, and weight restrictions.

e. The Contractor must only use the transporter(s) identified in the approved MHP for the performance of work. Only a transporter with a current Part 364 Waste Transporter Permit from NYSDEC may transport hazardous soil. A revised MHP or an addendum to the original approved MHP must be submitted to OEGS for review and approval at no additional cost to the City for any use of substitute or additional transporters.

f. The Contractor must develop, document, and implement a policy for accident prevention.

g. The Contractor must not combine hazardous materials from other projects with material from this project.

h. No material will be transported until approval by the Engineer is obtained.

3. Off-Site Disposal

a. The Contractor must use only the disposal facility(ies) identified in the approved MPH for the performance of the work. A revised MHP or an addendum to the original approved MHP must be submitted to OEGS for review and approval at no additional cost to the City for any use of substitutions or additions of disposal facility.

b. The Contractor will be responsible for acceptance of the materials at an approved facility, for ensuring that the facility is properly permitted to accept the stated materials, and for ensuring that the facility provides the stated treatment and/or disposal services.

c. The City reserves the right to contact and visit the TSD facility and regulatory agencies to verify the agreement to accept the stated materials and to verify any other information provided.

d. In the event that the identified and approved facility ceases to accept the stated materials or the facility ceases operations, it is the Contractor's responsibility to locate an alternate approved and permitted facility(ies) for accepting materials. The alternate facility(ies) must be approved in writing by the Engineer in the same manner and with the same requirements as for the original facility(ies). This must be done at no extra cost or delay to the City.

e. The Contractor must obtain manifest forms and complete the shipment manifest records required by the appropriate regulatory agencies for verifying the material and quantity of each load in unit of volume and weight. Copies of each manifest must be submitted to the Engineer within four (4) business days following shipment, and within three (3) business days after notification of receipt of the facility. The signed manifests must be maintained and kept with the project field records. Any manifest discrepancies must be reported immediately to the Engineer and be resolved by the Contractor to the satisfaction of the Engineer.

f. The Contractor must submit all results and weights to the Engineer.

g. The Contractor is responsible to pay all fees associated with the generation and disposal of all excavated hazardous waste. These fees include, but are not limited to, the New York State Department of Finance and Taxation (DFT) quarterly fees for

hazardous waste and the NYSDEC annual hazardous waste regulatory fee program. The Contractor must submit a copy of proof of payment to the Engineer and OEGS.

4. Equipment and Vehicle Decontamination

   a. The Contractor must design and construct a portable decontamination station to be used to decontaminate equipment and vehicles that have been used to handle contaminated soil. The cost for this work will be paid under Item ESCR-8.01 S.

   b. Water generated during the decontamination process must be disposed of in accordance with **Section 8.01 W1**.

8.01 H.4 METHOD OF MEASUREMENT

Quantities for hazardous soils will be measured in tons. The tonnage will be determined by off-site truck scales, as per Subsection 8.01 H1.3.B, that are capable of generating load tickets.

8.01 H.5 PRICE TO COVER

A. The unit bid price bid per ton for Item ESCR-8.01 H will include the cost of furnishing all labor, materials, equipment, plan, and insurance for excavation, handling, transportation, disposal, documentation, fees, permits, loading, stockpiling, hauling, and any other incidentals necessary to complete all the work as specified herein for handling, transporting, and disposal of hazardous soil.

B. Final disposal of contaminated soil will be paid for under Item ESCR-8.01 C1 – Handling, Transporting and Disposal of Non-Hazardous Contaminated Soils. Disposal of decontamination water will be paid for under Item ESCR-8.01 W1 – Removal, Treatment and Discharge/Disposal of Contaminated Water.

C. Backfill will be paid for under its respective item as specified in the contract document.

D. The independent Environmental Consultant will be paid under Item ESCR-8.01 S – Health and Safety.

Payment will be made under:

Item No.	Description	Pay Unit
ESCR 8.01 H	HANDLING, TRANSPORTING, AND DISPOSAL OF HAZARDOUS SOIL	TONS

SECTION ESCR 8.01 S – HEALTH AND SAFETY

8.01 S.1 WORK TO INCLUDE

Health and Safety Requirements for work related to contaminated and / or hazardous soil:

(A) Scope of Work

It is the Contractor's responsibility to stage and conduct the Contractor's work in a safe manner. The Contractor must implement a Health and Safety Plan (HASP) for contaminated/hazardous soil intrusive activities as set forth in OSHA Standards 1910.120 and 1926.650-652. The Contractor must ensure that all workers have at a minimum hazard awareness training. The Contractor must segregate contaminated work area in secured exclusion zones. These zones must limit access to Contractor personnel specifically trained to enter the work area. The exclusion zone must be set up to secure the area from the public and untrained personnel. The project health and safety program will apply to all construction personnel including persons entering the work area. In addition, the Contractor must protect the public from on-site hazards, including subsurface contaminants associated with on-site activities. The HASP must be signed off by a Certified Industrial Hygienist and reviewed and approved by OEGS.

Soil and groundwater at the site may be contaminated with petroleum, solvents, manufactured gas plant (MGP) or other hazardous substances. Contractor must provide materials, equipment, and training to workers and authorized visitors to ensure their protection from these and any other hazards which may be identified during the course of this work. Workers in areas with evidence of contaminated material or known hazardous waste must have completed a 40-hour Hazardous Waste Operations and Emergency Response (HAZWOPER) training course that meets OSHA requirements of 29 CFR Part 1910, Occupational Safety and Health Standards. In addition, all personnel in contaminated work zones will have up-to-date 8-hour refresher training and medical monitoring.

The Engineer will conduct continuous air monitoring to ensure that concentrations of organic vapors and dust do not exceed safe action levels included in the RAP. If action levels specified by the Engineer are exceeded, the Engineer will direct the Contractor to implement dust suppression measures, abatement of organic vapors, mitigation of odors, and/or temporary work stoppage, as appropriate. The City or Engineer will not accept delay claims or change orders associated with conducting dust suppression, mitigation of odors, or abatement of organic vapors.

Work must include, but not be limited to:

1. Implementation of a baseline medical program.
2. Providing safety equipment and protective clothing for site personnel, including maintenance of equipment on a daily basis; replacement of disposable equipment as required; decontamination of clothing, equipment and personnel; and providing all other health and safety measures.
3. Providing, installing, operating and maintaining on-site emergency medical first aid equipment as specified in this section for which payment is not provided under other pay items in this Contract.
4. Providing, installing, operating, maintaining and decommissioning all equipment and personnel decontamination facilities specified within this section, including, but not limited to, the decontamination pad, decontamination water supply, decontamination water collection equipment and all other items and services required for the implementation of the health and safety requirements for which pay items are not provided elsewhere in this Contract.

5. Provide the minimum health and safety requirements for excavation activities within the limits of this Contract.
6. Implement and enforce a HASP: The HASP as presented in these specifications is dynamic with provisions for change to reflect new information, new practices or procedures, changing site environmental conditions or other situations which may affect site workers and the public. The HASP will also address measures for community protection, accident prevention, personnel protection, emergency response/contingency planning, air monitoring, odor control and hazardous chemicals expected on site. Providing a Confined Space Entry Program as defined in the Occupational Safety and Health Act, Confined Space Entry Standard, 29 CFR 1910.146.
7. Employ all necessary means to prevent on- and off-site odor nuisances. The procedures may include, but not limited to: (a) limiting the area of open excavations; (b) shrouding open excavations with tarps and other covers; (c) misting with odor masking agents; and/or (d) use of pre-approved foams to cover exposed odorous soils.
8. Ensure that the Engineer's air monitoring equipment is not damaged. The cost to repair any damage to equipment caused by the Contractor will be borne by the Contractor.
9. Responsible for any toxic effects to workers or authorized visitors from the air supplied to respirators or from toxic or damaging vapors or residues resulting from petroleum, solvents, or other hazardous substances in soil or groundwater.

(B) Environmental Consulting Services

The Contractor must retain an independent Environmental Consultant to obtain all permits and perform all soil and water sampling, and health and safety services.

1. If conditions within the exclusion zone are deemed hazardous, then the Contractor and its independent Environmental Consultant must ensure that all personnel working within identified exclusion zones and/or involved (direct contact) with the handling, storage or transport of hazardous and contaminated materials must have completed a minimum of forty (40) hours of Health and Safety Training on Hazardous Waste Sites in accordance with 29 CFR 1910.120(e). The training program must be conducted by a qualified safety instructor. If conditions in the exclusion zone are deemed to be non-hazardous, the independent Environmental Consultant must provide site specific training.
2. The Contractor must ensure that on-site management and supervisors directly responsible for or who supervise employees engaged in hazardous waste operations must receive the training specified in above and at least eight (8) additional hours of specialized training on managing such operations at the time of job assignment.

(C) Submittals

1. The Contractor must submit a written HASP, as specified herein, to OEGS for review and approval. The written HASP must be submitted, within thirty (30) calendar days after the availability of analytical results of the soil and groundwater testing, as required under Section 8.01 C2 and Section 8.01 W2. The Contractor must make all necessary revisions required by OEGS and resubmit the HASP to OEGS for acceptance. Start-up work for the project will not be permitted until written acceptance has been issued by OEGS.
2. Daily safety logs must be maintained by the Contractor and must be submitted to the Engineer either on request or on completion of the work. Training logs must be maintained by the Contractor and submitted to the Engineer either on request or on completion of the work. Daily logs on air monitoring during excavation activities must be prepared and

maintained by the Contractor and submitted to the Engineer either on request or upon completion of the work.

3. A closeout report must be submitted by the Contractor to the Engineer upon completion of the work within the defined exclusion zones. This report must summarize the daily safety and monitoring logs and provides an overview of the Contractor's performance regarding environmental and safety issues. The report must carefully document all areas where contamination has been found including pictures, addresses of locations, and potential sources.
4. Medical Surveillance Examinations: The Contractor must submit to the Engineer the name, office address and telephone number of the medical consultant utilized. Evidence of baseline medical examinations together with the evidence of the ability to wear National Institute for Occupational Safety and Health (NIOSH) approved respirators (as specified in American National Standards Institute (ANSI) Z88.6) must be provided to the Engineer for all construction personnel who are to enter the exclusion zones.
5. Accident Reports: All accidents, spills, or other health and safety incidents must be reported to the Engineer.

(D) Health and Safety Plan

The HASP must comply with OSHA regulations 29 CFR 1910.120/1926.65. This document must at a minimum contain the following:

1. Description of work to be performed
2. Site description
3. Key personnel
4. Worker training procedures
5. Work practices and segregation of work area
6. Hazardous substance evaluation
7. Hazard assessment
8. Personal and community air monitoring procedures and action levels
9. Personal protective equipment
10. Decontamination procedures
11. Safety rules
12. Emergency procedures
13. Spill prevention and control, as well as spill reporting procedures
14. Dust control, vapor/odor suppression procedures
15. Identification of the nearest hospital and route
16. Confined space procedures
17. Excavation safety procedures

8.01 S.2 MEASUREMENT

Health and Safety Requirements

A. 25% of the lump sum price will be paid when the following items are implemented or mobilized:

1. Medical surveillance program
2. Health and safety training
3. Health and safety plan
4. Environmental and personnel monitoring
5. Instrumentation
6. Spill control

7. Dust control
8. Odor control
9. Personnel and equipment decontamination facilities
10. Personnel protective clothing
11. Communications
12. Mobilization

B. 50% will be paid in proportional monthly amounts over the period of work.

C 25% will be paid when the operation is demobilized and removed from the project site.

8.01 S.3 PRICE TO COVER

Health and Safety Requirements

The lump sum price bid for the health and safety requirements will include all labor, materials, equipment, and insurance necessary to complete the work in accordance with these specifications. The price bid will include, but not be limited to, the following:

A. Providing training, safety personnel, air monitoring and medical examinations as specified.

B. Providing safety equipment and protective clothing for site personnel, including maintenance of equipment on a daily basis; replacement of disposable equipment as required; decontamination of clothing, equipment and personnel; and all other health and safety activities or costs not paid for under other pay items in this Contract.

C. Providing, installing, operating and maintaining on-site emergency medical and first aid equipment. This includes all furnishings, equipment, supplies and maintenance of all medical equipment, and all other health and safety items and services for which payment is not provided under other pay items in this Contract.

D. Providing, installing, operating, maintaining, and decommissioning all personnel and equipment decontamination facilities, including decontamination pad, decontamination water supply, and all other items and services required for the implementation of the health and safety requirements for which pay items are not provided elsewhere in this Contract. Vehicle decontamination pads will be included in the price of this item. Disposal of decontamination fluid will be paid for under Item ESCR-8.01 W1.

E. Spill Control

1. Payment will account for furnishing, installing, and maintaining all spill control equipment and facilities. Payment will include equipment and personnel to perform emergency measures required to contain any spillage and to remove spilled materials and soils or liquids that become contaminated due to spillage during work within the exclusion zones and handling of excavated soils and liquids from these areas. This collected spill material will be properly disposed of.

2. Payment under this item will not include testing, handling, transportation or disposal of petroleum-contaminated/potentially hazardous soils excavated during construction. The price for this work will be paid for under Items ESCR-8.01 C1, ESCR-8.01 C2, or ESCR-8.01 H, as appropriate.

F. Dust Control

Payment will account for furnishing, installing, and maintaining dust control equipment and facilities to be used whenever applicable dust levels are exceeded as required in the Remedial Action Plan and MGP Mitigation Work Plan and associated Construction HASPs. Payment will include all necessary labor, equipment, clean water, foam, and all

other materials required by the Dust Control Plan. The NYSDOH Community Air Monitoring Plan (CAMP) may be used as guidance.

G. Vapor/Odor Suppression

Payment will account for furnishing, installing and maintaining vapor/odor control equipment and facilities to be used whenever organic vapor monitoring or the presence of odors indicates that vapor suppression is required to protect workers or the public as required in the Remedial Action Plan, MGP Mitigation Work Plan, and associated Construction HASPs. Payment will include all necessary labor, equipment, clean water, foam and all other materials required by the Vapor/Odor Suppression Plan.

H. Mobilization/Demobilization

1. Mobilization

Payment will include the following, but not be limited to:

a. All work required to furnish, install and maintain all signs, fencing, support zone facilities, parking areas and all temporary utilities;

b. All work required to furnish, install, and maintain an office space with phone and utilities for health and safety personnel;

c. All work required for complete preparation of lay down area for roll-off containers, including sampling, and any required fencing;

d. All direct invoiced cost from bonding companies and government agencies for permits and costs of insurance; and

e. All other items and services required for mobilization and site preparation.

2. Demobilization

Payment will include but not be limited to: All work required to sample the area; remove from the site all equipment, temporary utilities and supporting facilities; performance of necessary decontamination and repairs; disposal of disposable equipment and protective gear and other items and services required for complete demobilization.

Payment will be made under:

Item No.	Description	Pay Unit
ESCR 8.01 S	HEALTH AND SAFETY	L.S.

SECTION ESCR 8.01 W1 – REMOVAL, TREATMENT, AND DISPOSAL / DISCHARGE OF CONTAMINATED WATER

8.01 W1.1 WORK TO INCLUDE

General: This work must consist of the proper removal and disposal of all contaminated groundwater and decontamination water generated during construction operations. The Contractor must be solely responsible for the proper disposal or discharge of all contaminated water generated at the job site. The Contractor will have the option of treating water on-site for discharge to the sewer system or removing contaminated water for off-site disposal. The Contractor must be responsible to choose a method compatible to the construction work and will be compensated on a per day basis regardless of method employed. The Contractor will be compensated for only those days where the system is in full operation.

The Contractor must retain a dewatering/water treatment Specialist (hereinafter the "Specialist") and laboratory as specified under **Section 8.01 W2**, to conduct any testing that may be required for disposal of impacted water.

The dewatering/water treatment Specialist is responsible to obtain all permits; perform all water sampling, testing; and provide ancillary services related to dewatering and water treatment. The Specialist must at a minimum provide documentation to OEGS demonstrating the minimum requirements as set forth below:

1. The Specialist must demonstrate that it has, at a minimum, three (3) years' experience in the design of dewatering plans. The Specialist should demonstrate expertise dealing with issues associated with contaminated water. During that three (3) year period, the Specialist must demonstrate that it provided dewatering and water treatment systems as a routine part of its daily operations.
2. The Specialist must be experienced in work of this nature, size, and complexity and must have previous experience in working with the NYSDEC.
3. The Specialist must furnish a project listing identifying the location, nature of services provided, owner, owner's contact, contact's telephone number, project duration and value for at least five (5) projects within the last three (3) years of a similar nature, size, and complexity to this one.
4. If conditions within the exclusion zone are deemed hazardous, then the Contractor and its independent Environmental Consultant must ensure that all personnel working within identified exclusion zones and/or involved (direct contact) with the handling, storage or transport of hazardous and contaminated material must have completed a minimum of forty (40) hours of Health and Safety Training on Hazardous Waste Sites in accordance with 29 CFR 1910.120(e). The training program must be conducted by a qualified safety instructor. If conditions in the exclusion zone are deemed to be non-hazardous, the Specialist will be responsible to provide site-specific training to its employees and other affected personnel.
5. The Contractor must ensure that on-site management and supervisors directly responsible for or who supervise employees engaged in hazardous waste operations must receive the training specified in above and at least eight (8) additional hours of specialized training on managing such operations at the time of job assignment.

The Contractor must document all operations associated with the handling, sampling and disposal of contaminated water, and ensure that they are in compliance with applicable Federal, State and Local statutes and regulations.

The Contractor must supply all labor, equipment, transport, plant, material, treatment, and other incidentals required to conduct the specified work of this section.

If water will be disposed of into the sewer system, the Contractor must ensure the Specialist treats the water to comply with the New York City Department of Environmental Protection (NYCDEP) Sewer Effluent Limit concentrations prior to discharge. The Contractor is responsible for providing settling or filtering tanks and any other apparatus required by NYCDEP. Alternatively, the Contractor can provide a plan for transport and disposal at an off-site waste disposal facility.

Within forty-five (45) calendar days after award of Contract, the Contractor must submit to OEGS for review and approval, a Water Handling Plan (WHP). The WHP must be approved by OEGS prior to the Contractor's commencement of work. The minimum requirements for the WHP are specified in **Section 8.01W 1.2**, for each type of disposal (disposal into the sewer or off-site disposal). The Contractor must maintain a complete, up to date copy of the WHP on the job site at all times.

8.01 W1.2 CONSTRUCTION DETAILS

For each disposal method the Contractor proposes to utilize (disposal to sewer or off-site disposal), the WHP must include the information required in paragraphs A and B below, as appropriate.

A. On-site treatment and discharge into New York City sewers.

1. Regulations: The Contractor must comply with all applicable regulations. This includes but may not be limited to:

   Title 15-New NYCDEP Sewer Use Regulations.

2. Permits: The Contractor is solely responsible to obtain all necessary and appropriate Federal, State and Local permits and approvals. The Contractor will be responsible for performing all and any system pilot tests required for permit approval. This includes but may not be limited to:

   a. Industrial waste approval for the New York City sewer system.

   b. Groundwater discharge permit for the New York City sewer system (NYCDEP Division of Sewer Regulation and Control), if discharge to sewer exceeds 10,000 gallons per day.

   c. The Contractor must comply with NYSDEC State Pollutant Discharge Elimination System (SPDES) Permit Number GP-0-10-001, General Permit for Stormwater Discharges.

   d. An NYSDEC water withdrawal permit is required if discharge exceeds 100,000 gallons per day.

   e. Wastewater quality control application, NYCDEP.

3. The WHP for this portion of the work must include the following at a minimum:

   a. Identification and design of Contractor's proposed treatment to assure that the water meets the NYCDEP sewer use guidelines and/or NYSDEC discharge permit requirements prior to discharge to the sewer, including identification of all materials, procedures, settling or filtering tanks, filters and other appurtenances proposed for treatment and disposal of contaminated water.

b. The name, address and telephone number of the contact for the Contractor's proposed chemical laboratory, as well as the laboratory's certifications under Federal, State or non-governmental bodies.

c. The name, address and telephone number of the contact for the Contractor's proposed independent Environmental Consultant.

d. Copies of all submitted permit applications and approved permits the Contractor have received.

e. Periodic inspection, monitoring, and reporting in accordance with discharge permit requirements.

4. Materials

The Contractor must supply all settling or filtering tanks, pumps, filters, treatment devices and other appurtenances for treatment, temporary storage and disposal of contaminated water. All equipment must be suitable for the work described herein.

5. Execution

a. The Contractor is solely responsible for disposal of all water, in accordance with all Federal, State and Local regulations.

b. The Contractor is solely responsible for any treatment required to assure that water discharged into the sewer is in compliance with all permits and Federal, State and Local statutes and regulations.

c. The Contractor is solely responsible for the quality of the water disposed of into the sewers.

d. The Contractor is responsible for sampling and testing of water for the NYCDEP/NYSDEC discharge concentrations. The quality of the data is the Contractor's responsibility. Any sampling and testing must be conducted and paid in accordance with **Section 8.01 W2**.

e. The Contractor will be responsible to maintain the discharge rate to the sewer such that all permit requirements are met, the capacity of the sewer is not exceeded and no surcharging occurs downstream due to the Contractor's actions.

f. An NYSDEC water withdrawal permit is required if discharge exceeds 100,000 gallons per day.

g. Disposal of Treatment Media

(1) The Contractor will be responsible for disposal or recycling of treatment media in accordance with all Federal, State and Local regulations.

(2) The Contractor must provide the Engineer with all relevant documentation concerning the disposal of treatment media, including manifests, bills of lading, certificates of recycling or destruction and other applicable documentation.

(3) Disposal of treatment media will not be considered as a separate pay item; instead it will be considered as incidental work thereto and included in the unit price bid.

B. Off-Site Disposal

1. Regulations: The Contractor must conform to all applicable Federal, State and Local regulations pertaining to the transportation, storage and disposal of any hazardous and/or non-hazardous materials as listed in Attachment 2.

2. The following must be submitted to the Engineer prior to initiating any off-site disposal:

   a. (1) Name and waste transporter permit number

      (2) Address

      (3) Name of responsible contact for the waste transporter

      (4) Any and all necessary permit authorizations for each type of waste transported

      (5) Previous experience in performing the type of work specified herein

   b. General information for each proposed treatment/disposal facility and at least one backup treatment/disposal facility

      (1) Facility name and USEPA identification number

      (2) Facility location

      (3) Name of responsible contact for the facility

      (4) Telephone number for contact

      (5) Unit of measure utilized at facility for costing purposes

   c. A listing of all permits, licenses, letters of approval and other authorizations to operate, which are currently held and valid for the proposed facility as they pertain to receipt and management of the wastes derived from this Contract.

   d. A listing of all permits, licenses, letters of approval and other authorizations to operate which have been applied for by the proposed facility but not yet granted or issued. Provide dates of application(s) submitted. Planned submittals must also be noted.

   e. The Contractor must specify and describe the disposal/containment unit(s) that the proposed facility will use to manage the waste and provide dates of construction and beginning of use, if applicable. Drawings may be provided. The Contractor must identify the capacity available in the units and the capacity reserved for the subject waste.

   f. The Contractor must provide the date of the proposed facility's last compliance inspection.

   g. A list of all active (unresolved) compliance orders, agreements, enforcement notices or notices of violations issued to the proposed facility must be submitted. The source and nature of the cause of violation must be stated, if known. If groundwater contamination is noted, details of the facility's groundwater monitoring program must be provided.

   h. Description of all sampling and field/laboratory analyses that will be needed to obtain disposal facility approval.

3. Materials

All vessels for temporary storage and transport to an off-site disposal facility must be as required in DOT regulations.

4. Execution

a. General

(1) The Contractor must organize and maintain the material shipment records/manifests required by Federal, State and Local laws. The Contractor must include all bills of lading, certificates of destruction, recycling or treatment and other applicable documents.

(2) The Contractor must coordinate the schedule for truck arrival and material deliveries at the job site to meet the approved project schedule. The schedule must be compatible with the availability of equipment and personnel for material handling at the job site.

(3) The Contractor must inspect all vehicles leaving the project site to ensure that contaminated liquids are not spilling and are contained for transport.

(4) The Contractor must obtain letters of commitment from the waste haulers and the treatment, disposal or recovery facility to haul and accept shipment. The letter must indicate agreement to handle and accept the specified estimated quantities and types of material during the time period specified in the project schedule and any time extension as deemed as necessary.

(5) The Contractor must verify the volume of each shipment of water from the site.

(6) The Contractor is responsible for sampling and testing of water for off-site disposal. The quality of the data is the Contractor's responsibility. Any sampling and testing must be conducted and paid in accordance with **Section 8.01 W2**.

(7) The Contractor is responsible for any additional analyses required by the TSD facility, and for the acceptance of the water at an approved TSD facility.

b. Hauling

(1) The Contractor must not deliver waste to any facility other than the TSD facility(ies) listed on the shipping manifest.

(2) The Contractor must coordinate manifesting, placarding of shipments, and vehicle decontamination. All quantities must also be measured and recorded upon arrival at the TSD facility(ies). If any deviation between the two records occurs, the matter is to be reported immediately to the Engineer and must be resolved by the Contractor to the satisfaction of the Engineer.

(3) The Contractor will be responsible for any and all actions necessary to remedy situations involving material spilled in transit or mud and dust tracked off-site. This cleanup must be accomplished at the Contractor's expense.

(4) The Contractor will be responsible for inspecting the access routes for road conditions, overhead clearance and weight restrictions.

(5) The Contractor must only use the transporter(s) identified in the WHP for the performance of work. Only a transporter with a current Part 364 Waste Transporter Permit from NYSDEC may transport this material. Any use of substitute or additional transporters must have previous written approval from the Engineer at no additional cost to the City.

(6) The Contractor must develop, document, and implement a policy for accident prevention.

(7) The Contractor must not combine waste materials from other projects with material from this project.

(8) The Contractor must obtain for the City a hazardous waste generator identification number and will sign the manifest as the generator, if necessary.

(9) No material must be transported until approved by the Engineer.

c. Disposal Facilities

(1) The Contractor must use only the TSD facility(ies) identified in the WHP for the performance of the work. Substitutions or additions must not be permitted without prior written approval from OEGS, and, if approved, must be at no extra cost to the City.

(2) The Contractor will be responsible for acceptance of the material at an approved TSD facility, for ensuring that the facility is properly permitted to accept the stated material, and that the facility provides the stated storage and/or disposal services.

(3) The City reserves the right to contact and visit the disposal facility and regulatory agencies to verify the agreement to accept the stated material and to verify any other information provided. This does not in any way relieve the Contractor of the Contractor's responsibilities under this Contract.

(4) In the event that the identified and approved facility ceases to accept the stated materials or the facility ceases operations, it is the Contractor's responsibility to locate an alternate approved and permitted facility(ies) for accepting materials. The Contractor is responsible for making the necessary arrangements to utilize the facility(ies), and the alternate facility(ies) must be approved in writing by the Engineer in the same manner and with the same requirements as for the original facility(ies). This must be done with no extra cost or delay to the City.

d. Equipment and Vehicle Decontamination

(1) The Contractor must design and construct a portable decontamination station to be used to decontaminate equipment and vehicles exiting the exclusion zone. The cost for this work will be paid under Item ESCR-8.01 S.

8.01 W1.3 METHOD OF MEASUREMENT

The quantity for on-site treatment and discharge or off-site disposal will be on a per day basis.

8.01 W1.4 PRICE TO COVER

(A) The per day price bid for Item ESCR-8.01 W1 will include the cost of furnishing all labor, materials, equipment, plan, and insurance for handling, transportation, disposal, documentation, permits, hauling, mobilization and demobilization, and any other incidentals thereto to complete the work.

(B) The Contractor will not be paid for water that is within the NYCDEP Sewer Discharge Limits and/or NYSDEC permit discharge limits.

Payment will be made under:

Item No.	Description	Pay Unit
ESCR 8.01 W1	REMOVAL, TREATMENT, AND DISCHARGE/DISPOSAL OF CONTAMINATED WATER	DAY

SECTION ESCR 8.01 W2 –SAMPLING AND TESTING OF CONTAMINATED WATER

8.01 W2.1 WORK TO INCLUDE

(A) Description

The work will consist of sampling and testing of potentially contaminated groundwater, surface runoff within the excavated area and all contaminated water generated during the decontamination process.

(B) Sampling and Testing

1. The Contractor is responsible, at a minimum, for sampling and testing of contaminated water for the NYCDEP Sewer Effluent Limit concentrations as listed in Section 8.01 and/or NYSDEC SPDES Permit Number GP-0-10-001, General Permit for Stormwater Discharges and/or any other NYSDEC discharge permitting requirements, and in accordance with the Engineer-approved SSP/FSP and the Investigation HASP, as specified in Section 8.01 C2. The quality of the data is the Contractor's responsibility. Any additional testing required by the Federal, State and/or disposal facilities must be included in the bid price of this Item.
2. All sampling and testing must be conducted by a person trained in sampling protocols using accepted standard practices and/or the NYSDEC sampling guidelines and protocols.
3. All sample containers must be marked with legible sample labels which must indicate the project name, sample location and/or container, the sample number, the date and time of sampling, preservatives utilized, how the sample was chilled to 4 degrees Celsius, and other information that may be useful in determining the character of the sample.
4. Chain-of-custody must be tracked from laboratory issuance of sample containers through receipt of the samples.
5. The Contractor must maintain a bound sample log book. The Contractor must provide the Engineer access to it at all times and must turn it over to the Engineer in good condition at the completion of the work. The following information, as a minimum, must be recorded to the log:
   a. Sample identification number
   b. Sample location
   c. Field observation
   d. Sample type
   e. Analyses
   f. Date/time of collection
   g. Collector's name
   h. Sample procedures and equipment used
   i. Date sent to laboratory/name of laboratory
6. Only dedicated sampling equipment may be used to collect these samples. All equipment involved in field sampling must be decontaminated before being brought to the site, and must be properly disposed of after use.
7. Samples must be submitted to the Contractor's laboratory within the holding times for the parameters analyzed.
8. All analyses must be done by a laboratory that has received approval from the NYSDOH's ELAP for the methods to be done. The Contractor must specify the laboratory in the WHP.

9. Analytical results for water discharged to the sewer and for off-site disposal must be submitted to the Engineer no later than five (5) days after sample collection.
10. The City reserves the right to direct the Contractor to conduct alternative sampling in lieu of the parameters described above, if the situation warrants. The substitute sampling parameters will be of equal or lesser monetary value than those described above, as determined by industry laboratory pricing standards.

8.01 W2.2 METHOD OF MEASUREMENT

Quantities for samples will be measured as the number of sets of samples that are tested for the NYCDEP Sewer Effluent Limit concentrations and/or NYSDEC discharge permitting requirements. A set will be defined as one (1) representative sample analyzed for the full range of NYCDEP parameters as specified in Section 8.01.

8.01 W2.3 PRICE TO COVER

The unit price bid per set for Item ESCR-8.01 W2-1 will include the cost of furnishing all labor, materials, equipment, plan, and insurance for handling, transport, sampling, testing, documentation, permits, other incidentals necessary to complete the work of sampling and testing of contaminated water. Any additional costs incurred by the Contractor for sampling and testing of contaminated water will be included in the bid price of this Item.

Payment will be made under:

Item No.	Description	Pay Unit
ESCR 8.01 W2-1	NYCDEP-SAMPLING AND TESTING OF CONTAMINATED WATER	SETS

EP7 (1.0) - PAGES

GAS COST SHARING (EP-7) STANDARD SPECIFICATIONS

NOTICE

THE PAGES CONTAINED IN THIS SECTION REPRESENT THE GAS COST SHARING WORK THAT SHALL APPLY TO AND BECOME A PART OF THE CONTRACT.

(NO TEXT ON THIS PAGE)

TABLE OF CONTENT

I - NOTICE TO ALL BIDDERS; GAS COST SHARING WORK

II - GENERAL PROVISIONS; GAS COST SHARING WORK

1. General
2. Gas Interferences And Accommodations
   2a. Water Main Accommodations
   2b. Sewer Accommodations
3. Quantity Overruns, EP-7 Funded Bid Items
4. Changes And Extra Work
5. Excavation
6. Backfilling And Street Restoration
7. Non-Responsive Bids
8. Minimum Clearances
9. Work By Facility Operator
10. Materials Furnished By Facility Operator
11. Liability And Insurance
12. Width And Depth Of Excavation
13. Depth And Crossing Angles Of Gas Facilities
14. Maintenance Of Traffic For Gas Work
15. Relocated Gas And Temporary Systems Installation
16. Role Of Company Inspector
17. Coordination With Gas Company

III - TECHNICAL SECTION

SECTION 6.01 - Trench Crossings; Support And Protection Of Gas Facilities And Services.
SECTION 6.02 - Extra Excavation For The Installation Of Catch Basin Sewer Drain Pipes With Gas Interferences.
SECTION 6.02.1 - Extra Excavation For The Installation Of Catch Basin Sewer Drain Pipes With Upstream Inverts Greater Than Six (6) Feet.
SECTION 6.03 - Removal Of Abandoned Gas Facilities. All Sizes.
SECTION 6.03.1 - Removal Of Abandoned Gas Facilities With Possible Coal Tar Wrap. All Sizes. (For National Grid Work Only)
SECTION 6.03.1a - Removal Of Abandoned Gas Facilities With Possible Coal Tar Wrap. All Sizes. (For Con Edison Work Only)
SECTION 6.04 - Adjust Hardware To Grade Using Spacer Rings/Adaptors. (Street Repaving.)
SECTION 6.05 - Adjust Hardware To Grade By Resetting. (Road Reconstruction.)
SECTION 6.06 - Special Care Excavation And Backfilling.
SECTION 6.07 - Test Pits For Gas Facilities.
SECTION 6.08A - Pier and/or Plate Method of Protection for Ductile Iron Water main with less than 24" Cover
SECTION 6.09 - Trench Excavation and Backfill for New Gas Mains and Services (For National Grid Work Only)
SECTION 6.09a - Trench Excavation and Backfill for New Gas Mains and Services (For Con Edison Work Only)

IV - STANDARD SKETCHES; GAS COST SHARING WORK

NO. 1 - Support Requirements For Gas Mains And Services Crossing Excavation Greater Than 4'-0" Wide At Any Angle
NO. 1A - Support Requirements For Gas Mains Over 16" Diameter Up To And Including 48" Diameter Crossing Excavation At Any Angle
NO. 2 - Typical Methods Of Measurement For Gas Crossings
NO. 3 - Utility Crossings During Catch Basin Chute Connection Pipe Installation

NO. 4 - Utility Crossings During Catch Basin Chute Connection Pipe Installation (Extra Depth)
NO. 5 - Gas Main Encroachment On And/Or Parallel To Excavation Of Unsheeted Trench

V - PRELIMINARY GAS WORK TO BE PERFORMED BY FACILITY OPERATOR

VI - LISTING OF APPROXIMATE LOCATIONS OF EP-7 BID ITEMS QUANTITIES

I - NOTICE TO ALL BIDDERS; GAS COST SHARING WORK

All prospective bidders are hereby advised that, pursuant to the "Gas Facility Cost Allocation Act", ("the Act"), the City of New York has entered into an agreement ("the Agreement") with the gas companies (Con Edison or National Grid (formerly KeySpan Energy Delivery)) operating in their respective areas of the City to "share" the cost of facility relocation and/or support and protection of facilities disturbed by proposed water and/or sewer and related City work specified in this contract. Therefore, bid items, specifications and estimated quantities for the incremental costs of support and protection of certain gas facilities have been included in this contract. The low bid for this contract shall be determined by examining each bid for all work to be performed under this contract including any work of support and protection of gas facilities to be performed. The Contractor shall not seek additional compensation from gas companies except as specifically set forth in its contract.

II - GENERAL PROVISIONS; GAS COST SHARING WORK

1. General:

The Contractor shall perform City work with interferences from existing live and abandoned gas facilities. This shall be defined as utility work. Therefore, this contract includes bid items, specifications and estimated quantities designed to fully compensate him/her for the incremental costs of supporting, protecting, providing accommodations and, avoiding disturbing gas facilities located in the streets shown on the contract drawings. In the event that any other provisions of this contract related to gas facilities (or private utilities) conflict with these provisions, these provisions shall supersede and govern all work related to gas facilities owned by the companies operating in the project area. All utility work, as defined in these specifications, including changes and additions thereto shall be paid solely by the City except when specified otherwise in this contract. Contractor hereby agrees that the facility operator shall not be liable to pay him/her for any work performed including extra utility work. Contractor agrees that its bid prices include all compensation for loss of productivity and efficiency, idle time, delays (including any delays occasioned by negotiation of a contract change), change in operations, mobilization, demobilization, remobilization, added cost or expense, lost of profit, other damages or impact costs that may be suffered by or because of utility work, or the presence of gas facilities in the proximity of City work and that it will not seek additional compensation for these items. All disputes shall be resolved as specified in the contract.

Pursuant to the Act, Agreement, and the New York City Administrative Code, the gas company(ies) has been directed by the Commissioner and is required to perform all maintenance, repairs, replacement, shifting, alteration, relocation, and/or removal work that are not part of this contract. By having bid on this contract, the Contractor understands and agrees that the Commissioner has preasserted any right the City has to require, including the issuance of any directives or so called "order outs" under the New York City Administrative Code, any or all gas companies to maintain, repair, replace, protect, support, shift, alter, relocate, and/or remove all gas facilities that are about to be disturbed by the City contract work. The issuance of additional such directives during the performance of the contract work, where necessary in the sole judgment of the Commissioner, shall be initiated by such Commissioner as set forth in the relevant sections of the Act and Agreement. Contractor further agrees to insert such requirements as set forth herein above into any contracts with its approved subcontractors so that its subcontractors also understand and agree to such contract requirements.

2. Gas Interferences And Accommodations:

During the performance of sewer and water main work funded by the New York City Department of Environmental Protection (NYCDEP), as instructed by the Engineer, the use of any applicable contract bid item is allowed in order to resolve and accommodate all gas facilities interferences with such City work, including the removal of contaminated soil in associated trench excavation. This is in addition to the specified EP-7 bid items in the contract. Payment for such accommodation shall be funded by EP-7 bid item "UTL-GCS-2WS - GAS INTERFERENCES AND ACCOMMODATIONS" (F.S. Fixed Sum). The value of such accommodation shall be computed by multiplying the appropriate unit prices bid to the quantity of work performed, as determined by the Engineer, and applying the total amount thus to be paid

to EP-7 bid item "UTL-GCS-2WS - GAS INTERFERENCES AND ACCOMMODATIONS". When EP-7 bid item "UTL-GCS-2WS - GAS INTERFERENCES AND ACCOMMODATIONS" does not exist, such additional accommodation work shall be at no cost to the City but shall be a matter of adjustment between gas facility operator and Contractor. Private facilities, other than gas, that become in interference due to gas interferences accommodations shall also be accommodated, if so directed by the Resident Engineer, at no additional cost to the City and, provided that its owner agrees to be responsible for all additional costs to Contractor, otherwise, such facility shall be ordered by the City to be maintained, shifted, relocated or replaced by its owner at his/her expenses.

2a. Water Main Accommodations:

When water main construction is to be performed in this contract, Contractor shall be required, if warranted by field conditions, and at locations designated by the Resident or Borough Engineer, to change the vertical or horizontal alignment of water mains including but not limited to all additional labor, material, work method accommodations, furnishing, delivering and laying offset fittings and pipes, etc., necessary in order to complete water main installation and, avoid gas interferences in the project area, including street intersections. Typical work method accommodations shall include, but not be limited to, pier and plate, installation of filter fabric and select fill, etc. Such work shall be performed as directed by the Engineer and in accordance with contract specifications and latest edition of water mains standards and specifications.

2b.Sewer Accommodations:

When sewer construction is to be performed in this contract, Contractor shall be required, if warranted by field conditions, and at locations designated by the Resident or Borough Engineer, to change the horizontal alignment of sewer facilities (if possible) including but not limited to all additional labor, material, work method accommodations, furnishing, delivering and construction of additional manholes or modification of manholes/catch basins, extending chute connections, house connections, using alternate materials and methods, poured-in-place structures, etc., necessary in order to complete sewer installation and, avoid gas interferences in the project area, including street intersections. The term sewer facility shall include, but not be limited to, all sewer pipe and appurtenances, manholes, catch basins, catch basin chutes, etc. Such work shall be performed as directed by the Engineer and in accordance with contract specifications and latest edition of sewer standards and specifications.

3. Quantity Overruns, EP-7 Funded Bid Items:

No quantity overrun, in excess of one hundred twenty-five (125) percent, shall be permitted for EP-7 funded bid items (gas) included in this contract, except when Resident Engineer determines that such overruns are caused by field modifications to planned City work, or approved construction methods, or contract scope changes. The Engineer will notify the gas facility operator in writing of overruns. The Contractor must invoice the gas facility operator for payment of all overruns, which will be paid by the gas facility operator at the contract bid price. Gas facility operator will be entitled to reimbursement by NYCDEP under established cost sharing procedures.

4. Changes And Extra Work:

This section is not applicable to work defined under "Emergency Reconstruction Contracts" or so-called "Where and When Contracts" since these projects, by definition, inherently encounter unanticipated gas facilities and cannot be pre-engineered. In all other cases, any contract changes proposed for City work shall also cover and include all associated changes to support and protection of gas facilities affected by such changes to City work. In all other cases where the Contractor finds that City work cannot be performed as planned and specified and/or, as approved because of a need to support, protect and/or alleviate interferences from gas facilities that were not listed and/or shown, or incorrectly shown in contract plans and specifications, he shall immediately notify the Resident Engineer and the facility operators' representative of his findings. Resident Engineer shall promptly examine such claims and determine whether or not such work is covered by contract bid items and /or specifications (contract bid items and specifications shall include city contract items as well as EP-7 items). The Resident Engineer shall also examine the claim to determine if the application of EP-7 bid item "UTL-GCS-2WS - GAS

INTERFERENCES AND ACCOMMODATIONS" is appropriate to resolve the claim. If upon examination, the Engineer determines that such field conditions were unanticipated (not shown and/or listed, or incorrectly shown in contract documents) and are not covered by bid items and contract specifications, he shall then direct the Contractor and the affected facility operator to negotiate the cost of supporting and protecting, and/or alleviating the impact on City work caused by such unanticipated gas facilities with each other with the understanding that the performance of City work shall continue during negotiations. If a cost agreement is reached, the Contractor and facility operator shall adjust such costs between themselves at no additional costs to the City contract. If the Contractor and affected facility operator do not reach an agreement concerning the price to be paid for the extra work within five (5) business days of the Engineer's directive to engage into such negotiations and, after considering: public safety and inconvenience, requirements of laws and regulations applicable to private utilities, integrity of all utility systems, including but not limited to sewer and water, gas, electric, telephone and, cable TV facilities, sound engineering practices, cost (long and short term) to all affected parties, and potential City work delays, then the Resident Engineer, depending on nature and severity of interferences with City work, shall either, direct the facility operator to relocate or replace its facilities at its own discretion and cost, reimbursable by NYCDEP under established gas cost sharing procedures or, direct the Contractor to perform the utility work on actual time, material and equipment costs basis pursuant to relevant contract requirements and amendments. Contract bid prices for any applicable items of work involved shall be applied, or converted to an allowance for time and material charges. Changes shall be for affected portions of utility work and, shall be processed with EP-7 funds.

5. Excavation:

All excavators shall notify the NYC/LI One Call Center at 1-800-272-4480 at least two (2) working days, not including the day of the call, but not more than ten (10) working days in advance of the start of any excavation work. The gas company(ies) will mark out its facilities within the project limits and provide Construction Inspector(s) during all excavation work in close proximity (within twelve (12) inches) to gas facilities. The Contractor shall exercise extreme caution when excavating in the vicinity of any gas facilities. Hand excavation shall be performed within twelve (12) inches of gas facilities. The Contractor prior to excavating underneath these facilities shall adequately support all gas facilities. Standard support details for gas facilities have been included in the specifications. Any damage to gas facilities shall be reported immediately to the gas company(ies). The Contractor shall be responsible for all cost associated with repairs made necessary by damages caused by his operations.

6. Backfilling And Street Restoration:

Backfilling operations and street restorations shall be in accordance with contract requirements.

7. Non-Responsive Bids:

Every gas (EP-7) bid item has a suggested "Not less than" value per unit indicated on contract bid sheet. Bids resulting in cost of less than suggested for EP-7 items are hereby prohibited and if submitted shall be considered NON-RESPONSIVE.

8. Minimum Clearances:

Clearance requirements for City work shall govern and supersede any clearance requirement of gas facility operator. Therefore, a minimum of twelve (12) inches clearance between private utilities and City water mains, sewers or related structures to be installed in this contract shall be maintained. When this clearance is not attainable, the Resident Engineer may allow a minimum of four (4) inches clearance. With less than twelve (12) inches clearance a neoprene/polyethylene shield (to be provided by facility operator) shall be installed as part of all work item specifications. However, if Resident Engineer determines that City work cannot be performed within allowable clearance and no reasonable City accommodation (no-cost change to City work) is possible, the City shall direct the facility operator to remove, relocate, shift, or alter their facility(ies) pursuant to the New York City Administrative Code.

9. Work By Facility Operator:

The facility operator may find it necessary to perform the following types of work during performance of City work: accommodating a contractor's request for gas facilities modifications (in order to facilitate City contractor's proposed construction method) or, remedial and emergency work on gas facilities proper with their own resources and materials if an approved method of construction for City work causes unanticipated disturbances to gas facilities or, replacing defective gas facilities when they are exposed by the Contractor and their actual conditions are observable by the facility operator. Also included in the above category of defective gas facilities are: the presence of environmental contaminants attributable to the gas facility in or around gas facilities. If such work is deemed required by the facility operator or if facility operator is directed by the City to address such deficiencies at any time during the course of construction, the Contractor shall modify the construction schedule at no cost to the City and allow the facility operator five (5) business days to perform such work without interferences. Additional costs to the facility operator (in cases of accommodations) or, Contractor (in cases of defective gas facilities) due to such gas work, if any, shall be the responsibility of the parties involved and not of the City. Such costs shall be a matter of adjustment between the Contractor and the facility operator.

10. Materials Furnished By Facility Operator:

It shall be the Contractor's responsibility to inspect material to be installed by him immediately upon delivery and advise the facility operator through its authorized representative, of all damaged materials. The Contractor at no additional costs to the City or the facility operator shall replace any material that is damaged or lost after the Contractor's inspection.

11. Liability And Insurance:

Notwithstanding the provisions of this contract, the existing division of liabilities to third parties shall remain the same as between the City and the company. Therefore, it is specifically agreed by the City, company and Contractor (by bidding on this contract) that for the purpose of any liabilities to third parties, that the City contractor performing work directly and physically relating to gas company facilities in this project, shall be deemed an agent of the company and not an agent of the City, the New York City Municipal Water Finance Authority, or the New York City Water Board. Contractor shall include the company as an additional insured on all insurance policies maintained to comply with the City's insurance requirements.

12. Width And Depth Of Excavation:

Contractor shall not be authorized to deliberately change trench or excavation widths and/or depth specified without Engineer's approval. Enlargement of any side of excavation up to eighteen (18) inches beyond pay limits (or inside face of sheeting) requested by the Contractor for the installation of certain types of sheeting may be granted. However, such enlargements or those greater than allowable shall not be approved when, in the sole judgment of the City, field conditions allow the water mains and sewer work to be performed within the limits specified and, the sole purpose of such enlargement request is to impact adjacent utilities (public or private) whose support and protection are part of this contract. Any approval shall be given at no additional cost to the City contract, including EP-7 funding, and all costs associated with unauthorized enlargements shall be the sole responsibility of the Contractor.

13. Depth And Crossing Angles Of Gas Facilities:

Where gas facilities are shown (or specified as) crossing proposed alignment of sewers, water mains, catch basins and chute connections or any other proposed excavations at specific angles (as measured off plans or sketches or specified in contract), it shall be understood that actual field measurements may deviate (plus or minus) forty-five (45) degrees from those shown or specified. The cover, or depth from street surface to top of facilities, shall be as shown or specified in contract documents, no deviation is to be assumed. Where gas facilities are not shown on contract documents, but their support and protection are otherwise included in this contract then, all references to facilities crossing at "various angles and depth" in the gas sections shall mean that such facilities are crossing sewer, water, catch basin and, catch basin chute, and other excavations at a ninety (90) degree angle to the proposed sheeting line or side of

excavation (for unsheeted trenches) with an allowable deviation of forty-five (45) degrees in any direction, except for catch basin chute excavation where the allowable deviation shall be sixty (60) degrees. Where the cover is not noted or specified, the bottom face of such facilities shall be assumed to be crossing catch basin chutes at a depth of three (3) foot eight (8) inches or less from the street surface. Paragraph No. 2 above shall apply in cases of distribution water main construction. Appropriate bid items and specifications are provided for cases where angle and depth are greater than stated above. This section also applies to work defined in “Emergency Reconstruction Contracts” or so-called “Where and When Contracts”. These contracts are not pre-engineered and consequently have no drawings, sketches or determined locations and so, gas facilities encountered will be crossing existing and proposed sewer, water, catch basin/catch basin chutes and all appurtenances at various angles and depths.

14. Maintenance Of Traffic For Gas Work:

All work pertaining to gas bid items and specifications shall be performed within the contract maintenance of traffic plan as specified in the contract document. The bid price for the Maintenance and Protection of Traffic shall cover all work pertaining to gas items. The City shall make compensation for additional maintenance and protection of traffic items in connection with gas item of work only when such additional work is deemed reasonable and necessary by the Resident Engineer and is approved by him prior to its performance.

15. Relocated Gas And Temporary Systems Installation:

In cases where the Contractor is allowed to select the location for temporary construction such as, installation of dewatering headers, wells, well points, etc., he shall not disturb any gas facilities shown on sketches provided in this section. The only exception shall be, if the affected gas company agrees to such relocation and provided that the cost of such relocation is a matter of adjustment between the company and Contractor, and at no cost to the City.

16. Role Of Company Inspector:

In any case in which the City elects to perform some or all support and protection work with its own employees, personnel or contractors, the facility operator shall provide onsite inspectors to approve and certify such support and protection work (exclusive of City accommodations) performed by the City's own employees, personnel, and contractors. Facility operator’s inspectors are not authorized to direct City contractor during the performance of contract work. They shall act through the City Resident Engineer and provide him/her required approvals and certifications, prior to preparing partial payments of EP-7 items, in a format and frequency to be prescribed by the appropriate City Head of Construction.

17. Coordination With Gas Company:

The Contractor shall be required to notify the gas company(ies), in writing, at least two (2) weeks prior to the start of final paving in order to allow companies to complete any unfinished gas work located within the area to be paved. Every effort shall be made to maintain gas service with minimum inconvenience to the public.

III - TECHNICAL SECTION

SECTION 6.01 - Trench Crossings; Support And Protection Of Gas Facilities And Services.

1. Description:

Under this section, the Contractor shall provide all labor, materials, equipment, and incidentals required to

support and/or protect the integrity of gas mains, services and appurtenances of any sizes, configurations, and operating pressures crossing trench excavations above subgrade for planned construction of sewers and water mains facilities. A gas service shall be defined as a gas pipe of three (3) inches in diameter or less branching from the main to a customer pick up point or property valve box. A gas main may be any size pipe that is part of a distribution or transmission network other than services described above. Crossings shall be defined as gas facilities spanning the width of excavation (one side to the other side). These crossings may be at various angles and depth as shown on “Gas Cost Sharing Work Standard Sketches Nos. 1 and 1A”, and as specified in “General Provisions; Gas Cost Sharing Work Paragraph No. 13” and, at the locations shown or listed in contract documents. The gas company operating in the area, (facility operator), owns these facilities. The work shall be performed in accordance with contract specifications, plans, and at the directions of the Resident Engineer in consultation with the authorized representatives of the facility operator.

2. Method Of Construction:

A. Protection: In general, the gas facilities shall be protected as required by New York State Industrial Code 753. In particular, the Contractor shall use hand excavation methods (pick and shovel or hand held power tools) directly below the pavement base to expose the gas facilities (marked out by facility operators) and to ascertain the clearances and cover of the facilities with respect to the proposed excavation. Upon exposing the affected facilities sufficiently, at the discretion of the Resident Engineer, to ascertain the foregoing, Contractor shall be permitted to proceed with a combination of hand and machine excavation, as appropriate, outside a zone of protection whose limit shall be defined as a perimeter located twelve (12) inches from the outside face of each gas facility crossings (See “Gas Cost Sharing Work Standard Sketch No. 2”). If the facilities are in direct interference with City work, meaning that “Minimum Clearances” described in “General Provisions; Gas Cost Sharing Work Paragraph No. 8” cannot be maintained, and excavation has to be temporarily or permanently abandoned then this particular location shall become a test pit and dealt with as specified in Section 6.07, and “General Provisions; Gas Cost Sharing Work Paragraphs Nos. 2 and 8”.

B. Support: Gas mains or services crossing excavations equal or less than four (4) feet wide are generally self supporting, unless field conditions as determined by the Resident Engineer require otherwise. The support requirements for gas mains and services crossing excavations greater than four (4) feet wide shall be as shown on the attached “Gas Cost Sharing Work Standard Sketch No. 1” and Contractor shall use sheeting methods that permit the maintenance of gas facilities in their existing locations and configurations. Alternate methods equivalent to those shown on the sketch or accommodations by the facility operator proposed by the Contractor in order to facilitate the execution of the specified work shall be allowable, provided that prior approval is obtained by the Contractor from the Engineer and the facility operator. The support and protection of gas facilities crossings shown on plans, drawings, listings or otherwise identified in this contract shall not be circumvented with the issuance of so called "order outs".

3. Method Of Measurement:

The Contractor shall be paid for supporting and/or protecting gas facilities crossing trench excavations under the appropriate bid items covered by this section. The Contractor shall be directly responsible to the facility operator for the total cost of using any alternate method requiring the use of resources owned by the facility operator. Regardless of the method used, the City shall pay the bid price for the appropriate support and/or protect item of work. The average rate charged by the facility operator for alternate support and protection work such as, disconnecting and reconnecting gas services is listed in attached “Schedule GCS-A”.

4. Payment Restrictions:

These items shall not be paid for: gas services crossing unsheeted water main trench excavation; abandoned gas main/services identified by facility operator; gas mains/services crossing trench excavations for fire hydrant branch connections pipes, catch basins and/or chutes (sewer drain pipe), house sewer and/or water services; gas facilities encroaching any face of excavation for sewer and/or

water construction, all of which are covered under other contract sections. Also this item shall not be paid for new gas mains and services crossing water trenches when trenching for such new facilities has been performed by the Contractor in common with trench excavation for City work (overlapping trench limits). The cost of supporting and protecting such gas facilities crossings shall be deemed included in the cost of trench excavation for the new gas facilities. This payment restriction shall apply even if such common trench gas excavation is not part of the contract. The prices bid for items covered by this section represent full compensation to Contractor to completely perform the work described. No other bid items shall be combined with these items in order to pay for gas main and/or services crossing excavations specified herein.

5. Method Of Payment:

Each (Ea.) gas facility crossing trench excavation as described in these specifications shall be counted for payment.

6. Price To Cover:

The cost of timber/steel supports installed for gas facilities shall be included in the bid price. The bid price for each crossing shall also cover all additional supervision, labor, material (except those provided by the facility operator), equipment and insurance necessary to completely maintain the gas facilities without disruption of service to the customers and in accordance with contract plans, specifications and facility operator standards. The price shall also include: changes of method of operations; sheeting modifications where necessary to accommodate the gas facilities crossings; installation and removal of water pipe under gas facilities (so called "snaking"); extra care during excavation (including hand excavation under existing single and multiple gas facilities); extra backfilling and compaction around, over and under gas facilities; installation and removal of sheeting around gas facilities; associated maintenance and protection of traffic; barricades; and traffic plates that may be required to temporarily close and/or complete the work.

SECTION 6.02 - Extra Excavation For The Installation Of Catch Basin Sewer Drain Pipes With Gas Interferences.

1. Description:

Under this item, the Contractor shall provide all labor, materials, equipment, insurance, and incidentals for the extra excavation associated with the installation of catch basin sewer drain pipes (chute) under gas facilities of various sizes crossing the trench excavation at various angles and depth at the locations shown in the contract documents and also, for the support and protection of these facilities during associated excavation and backfill operations. The gas company operating in the area, (facility operator), owns these facilities.

2. Method Of Measurement:

The bid price shall be per location (Each) where extra excavation is required when catch basin sewer drain pipes are installed at an upstream invert depth lower than four (4) feet (up to a maximum of six (6) feet) from the proposed pavement grade because the bottom faces of interfering gas mains and appurtenances are located at a depth greater than three (3) foot eight (8) inches from proposed pavement surface (See “Gas Cost Sharing Work Standard Sketch No. 4”).

3. Method Of Construction:

Incremental cost responsibility for chute excavation is determined by the first private facility encountered starting from catch basin structure proper and that prevents the installation of the chute connection at an upstream cover less than or equal to three (3) feet or any other minimum cover required to avoid City facilities (e.g. water, sewer, etc.) as directed by the Resident Engineer.

4. Payment Restrictions:

This item shall not apply and related bid item shall not be paid in cases where:

A. Upstream invert chute is more than six (6) feet deep because of gas facilities.

B. Chute cannot be installed above existing gas facilities because of interferences with other private facilities that are not otherwise covered under this contract, regardless of upstream invert depth.

The above cases shall be at no cost to the City, but shall be a matter of adjustment between the Contractor and the facility operator(s).

5. Price To Cover:

The bid price shall cover the additional cost of all additional supervision, labor, materials, equipment and insurance, to complete the installation of catch basins and associated sewer connections in accordance with the contract plans and specifications. The price shall include: excavation by hand around and under single and multiple gas facilities; locating, supporting and protecting gas facilities; backfilling and all other items necessary to perform all work incidental thereto including: installation and removal of drain pipe under gas facilities ("snaking"); widening of trenches to facilitate the above work; subsequent additional backfill and pavement restoration; modifying precast catch basin window to accommodate connection; changing sheeting method and configuration to accommodate gas facility crossings; maintenance and protection of traffic; barricades; and installation of traffic plates that may be required to temporarily close and/or complete the work. The price shall not include removal of ledge rock and/or excavation of boulders in open cut.

SECTION 6.02.1 - Extra Excavation For The Installation Of Catch Basin Sewer Drain Pipes With Upstream Inverts Greater Than Six (6) Feet.

1. Description:

Under this item, the Contractor shall provide all labor, materials, equipment, insurance and incidentals for the extra excavation of catch basin chutes where the upstream invert is greater than six (6) feet under gas facilities of various sizes crossing the trench excavation at various angles and depth at the locations shown in the contract documents or as determined by field conditions and also, for the support and protection of these facilities during the associated excavation, sheeting and backfilling operations.

2. Method Of Measurement:

The bid price shall be per location (Each) where extra excavation and sheeting is required when the catch basin chute installed at an upstream invert depth lower than six (6) feet from the proposed pavement grade because the bottom faces of the interfering gas mains and appurtenances are located at a greater depth than three foot eight inches from the proposed pavement surface only.

3. Method Of Construction:

Incremental cost responsibility for chute excavation is determined by the first private facility encountered during such excavation when initiated from catch basin structure and that prevents the installation of the chute at an upstream cover less than or equal to three (3) feet or any other cover required to avoid City facilities as directed by the Resident Engineer.

4. Payment Restriction:

This item shall not apply and related bid item shall not be paid in cases where:
Upstream invert chute is less than or equal to six (6) feet deep because of gas facilities. Section 6.02 shall be paid.

5. Price To Cover:

The bid price shall cover the additional cost of all supervision, labor, materials, equipment and insurance to complete the installation of catch basin and associated sewer connections in accordance with the contract plans and specifications. The price shall include: excavation by hand around and under single and multiple gas facilities; locating, supporting and protecting gas facilities incidental thereto; widening of trenches to facilitate the above work; subsequent additional backfilling and pavement restoration; modifying pre-cast basin window to accommodate connection; the installation of catch basin with deeper sumps as specified; additional sheeting and changes in sheeting method and configuration to accommodate gas facility crossings; maintenance and protection of traffic; barricades; and installation of traffic plates that may be required to temporarily close and/or complete the work.

SECTION 6.03 - Removal Of Abandoned Gas Facilities. All Sizes.

1. Description:

Under this section the Contractor shall provide all labor, materials, equipment, insurance and, incidentals required for the removal of abandoned gas mains, services, or appurtenances thereof, located within the street shown on the contract plans, owned by gas company operating in the project area (facility operator), used or to be used for or in connection with or to facilitate the conveying, transportation, distribution or furnishing of gas (natural or manufactured or mixture of both) for light, heat, or power, but does not include property used solely for or in connection with business of selling, distributing or furnishing of gas in enclosed containers. Such removal shall include only abandoned gas facilities that interfere with (i.e. cause additional work) City work.

2. Determination Of Operating Status Of Gas Facilities:

The Contractor shall notify facility operator, as required by New York State Industrial Code 753. Gas facilities shall not be removed without the approval of the facility operator whose authorized representative shall certify in writing (specific facility or area wide facilities certification) and in a timely manner acceptable to the Resident Engineer that abandoned facilities are free of combustible gas and any other environmental contaminants prior to removal. The Resident Engineer shall rely on facility operator's certification. The facility operator may request the excavation of test pits (See Section 6.07) for this determination ahead of City work and, Contractor shall provide safe access, facilitate and permit facility operator to enter test pit excavations for the purpose of testing gas facilities to be removed by the Contractor. However, facility operator may prefer to make this test during performance of City work, in order to issue the above certification. This shall be permitted provided that it is agreed that additional costs, if any resulting from this choice shall be a matter of adjustment between the Contractor and facility operator only, and at no cost to the City.

3. Restrictions:

The facility operator shall be solely responsible for its contaminated gas facilities, surrounding contaminated soil and their disposal and abatement procedures, unless contract bid items are applicable and provided for such work. In such cases, the quantity removed shall be charged to EP-7 bid item "UTL- GCS-2WS - GAS INTERFERENCES AND ACCOMMODATIONS" at the City bid prices.

4. Method Of Measurement:

Abandoned gas pipeline removal shall be measured for payment per linear foot of pipe and appurtenances removed.

5. Price To Cover:

The price shall cover all additional cost of supervision, labor, materials, equipment, and insurance necessary to complete this work in accordance with the contract plans and specifications, including excavation by hand around and under other City and facility operator owned properties and, where necessary, support and protection of such properties. The price shall also cover breaking, cutting, and/or burning of abandoned gas pipes and their disposal from the site; sealing open ends remaining in the excavation with concrete or caps (caps to be provided by the facility operator) and backfilling of the area where the pipeline has been removed with clean backfill. The price shall also include any required dump charges. This item does not include any type of extra excavation, backfilling, compaction, pavement removal and restoration associated with abandoned gas facilities removal, all of which are covered under Section 6.06.

SECTION 6.03.1 - Removal Of Abandoned Gas Facilities With Possible Coal Tar Wrap. All Sizes. (For National Grid Work Only)

1. Description:

Under this section the Contractor shall provide all labor, materials, equipment, insurance and, incidentals required for the removal of abandoned gas mains, services or appurtenances thereof, located within the street shown on the contract plans, owned by the gas company operating in the project area (facility operator), used or to be used for or in connection with or to facilitate the conveying, transportation, distribution or furnishing of gas (natural or manufactured or mixture of both) for light, heat, or power, but does not include property used solely for or in connection with business of selling, distributing or furnishing of gas in enclosed containers. Such removal shall include only abandoned gas facilities that interfere with (i.e. cause additional work) City work. These gas facilities may be coated with Coal Tar Wrap and so, may require special handling and disposal methods as specified in National Grid Standard Operating Procedure 12-2, Coal Tar Wrap Handling and 12NYCRR56.

2. Determination Of Operating Status Of Gas Facilities:

The Contractor shall notify facility operator, as required by New York State Industrial Code 753. Gas facilities shall not be removed without the approval of the facility operator whose authorized representative shall certify in writing (specific facility or area wide facilities certification) and in a timely manner acceptable to the Resident Engineer that abandoned facilities are free of combustible gas and any other environmental contaminants prior to removal. The Resident Engineer shall rely on the facility operator's certification. The facility operator may request the excavation of test pits (See Section 6.07) for this determination ahead of City work and, the Contractor shall provide safe access, facilitate and permit facility operator to enter test pit excavations for the purpose of testing gas facilities to be removed by the Contractor. However, the facility operator may prefer to make this test during performance of City work, in order to issue the above certification. This shall be permitted provided that it is agreed that additional costs, if any, resulting from this choice shall be a matter of adjustment between the Contractor and the facility operator only, and at no cost to the City contract. Should such investigation result in the determination that the abandoned gas facilities do not contain Coal Tar Wrap then the removal of said facilities shall be covered under separate item (See Section 6.03).

3. Requirements:

The City Contractor shall excavate abandoned gas facility sufficiently, either in its entirety, or at locations determined by Contractor to allow the removal of Coal Tar Wrap (if present on the abandoned gas facility) and to facilitate the safe extraction of manageable lengths of abandoned pipe without damage to adjacent facilities, utilities or City structures either parallel to or crossing above or below abandoned gas facility. The Contractor is to allow access to the designated cutting points within the Contractor's trench by authorized National Grid personnel who will remove the Coal Tar Wrap as per National Grid procedures. This work by National Grid personnel shall be performed in a timely fashion and shall not unduly impede the Contractor's progress and/or productivity. Upon completion of the coating removal, the Contractor

shall be allowed to cut, burn or grind the gas facility and remove the section of abandoned pipe. The Contractor at a site designated by the Contractor shall stockpile the removed pipe. The facility operator will be responsible to provide trucking and disposal services with its own personnel and shall remove the stockpiled pipes during off hours or during such time as agreed to by the Contractor. Since the pipe removed will remain the property of the facility operator and is to be disposed of by the facility operator, the facility operator shall be responsible for any required notifications, filings, dump charges and incidentals associated with the disposal of abandoned gas facilities found to contain Coal Tar Wrap.

4. Method Of Measurement:

Abandoned gas pipeline removal shall be measured for payment per linear foot of pipe and appurtenances removed.

5. Price To Cover:

The price shall cover all additional cost of supervision, labor, materials, equipment and insurance necessary to complete this work in accordance with the contract plans and specifications, including excavation by hand around and under other City and facility operator owned properties and, where necessary, the support and protection of such properties. The cost shall also include hand excavation in the area(s) of proposed abandoned pipe cut(s), cutting and/or burning of abandoned gas pipes and stockpile of removed sections of abandoned pipe and associated maintenance and protection of traffic, blocking and temporary fencing if required. The unit price shall also cover sealing open ends remaining in the excavation with concrete or end caps (end caps to be provided by the facility operator) and backfilling of the area where the abandoned pipeline has been removed with clean backfill material. This item does not include any type of extra excavation, backfilling, compaction, pavement removal and/or restoration (temporary and permanent) associated with abandoned pipe removal ("lost trench"), all of which are covered under separate Section 6.06. The price shall also include allowance for any loss of productivity by the Contractor due to required facility operator work to remove pipe coating and prepare pipe for cutting as well as any change in Contractor's excavation method, additional trucking and/or stockpiling costs.

SECTION 6.03.1a - Removal Of Abandoned Gas Facilities With Possible Coal Tar Wrap. All Sizes. (For Con Edison Work Only)

1. Description:

Under this section the Contractor shall provide all labor, material, equipment, insurance and, incidentals required to prepare abandoned gas mains, services and appurtenances thereof located within the street shown on contract plans, owned by the gas company operating in the project area (facility operator), for removal due to interference with proposed City work. These abandoned gas facilities were, at one time, used for or in connection with or to facilitate the conveying, transportation, distribution or furnishing of gas (natural, manufactured or a combination of both) for light, heat, or power, but does not include property used solely for or in connection with business of selling, distribution or furnishing of gas in enclosed containers. Such preparation for removal shall include only abandoned gas facilities that interfere with (i.e. cause additional work) City work. These gas facilities may be coated with Coal Tar Wrap which may contain asbestos or PCB's and so, may require special handling and disposal methods as specified in Con Edison - ASBESTOS MANAGEMENT MANUAL, CHAPTER 6 - ASBESTOS WORK PROCEDURES, SECTION 06.04 - COAL TAR WRAP REMOVAL. For under 25' (feet) in length and an approved NYC-DEP variance for over 25' (feet).

2. Determination Of Operating Status Of Gas Facilities:

The Contractor shall notify facility operator, as required by New York State Industrial Code 753. Gas Facilities shall not be removed without the approval of the facility operator whose authorized representative shall certify in writing (specific facility or area wide facilities certification) and in a timely manner acceptable to the Resident Engineer that abandoned facilities are free of combustible gas and any other environmental contaminants prior to removal. The Resident Engineer shall rely on the facility

operator's certification. The facility operator may request the excavation of test pits (See Section 6.07) for this determination ahead of City work and Contractor shall provide safe access, facilitate and permit facility operator to enter test pit excavations for the purpose of testing gas facilities. However, the facility operator may prefer to make this test during performance of City work in order to issue the above certification. This shall be permitted provided that it is agreed that additional costs, if any, resulting from this choice shall be a matter of adjustment between the Contractor and the facility operator only, and at no cost the City contract. Should such investigation result in the determination that the abandoned gas facilities do not contain Coal Tar Warp then the removal of said facilities shall be covered under separate item (See Section 6.03).

3. Requirements:

The Contractor shall excavate abandoned gas facility sufficiently, either in it's entirety, or at locations determined by Contractor to allow the removal of Coal Tar Wrap (if present on the abandoned gas facility) and to facilitate the safe extraction of manageable lengths of abandoned pipe without damage to adjacent facilities, utilities or city structures either parallel to or crossing above or below abandoned gas facility. The Contractor is to allow access to the designated cutting points within the Contractors trench by authorized Con Edison personnel who will remove the Coal Tar Wrap as per Con Edison and/or NYC-DEP approved procedures. This access shall conform to all applicable codes, rules & regulations. This work by Con Edison personnel shall be performed in a timely fashion and shall not unduly impede the Contractors progress and/or productivity. Upon completion of the coating removal, the Contractor shall be allowed to cut, burn or grind the gas facility and remove the section of abandoned pipe. Contractor shall designate a specific site to stockpile those removed pipes. The facility operator will be responsible to provide trucking and disposal services with its own personnel and shall remove the stockpiled pipes during off hours or during such time as agreed to by the Contractor. Since the pipe removed will remain the property of the facility operator and is to be disposed of by the facility operator, the facility operator shall be responsible for any required notifications, filings, dump charges and incidentals associated with the disposal of abandoned gas facilities found to contain Coal Tar Wrap.

4. Method Of Measurement:

Abandoned gas facility removal shall be measured for payment per linear foot of pipe and appurtenances removed.

5. Price To Cover:

The price shall cover all additional cost of supervision, labor, materials, equipment and insurance necessary to complete this work in accordance with the plans and specifications, including, but not limited to, excavation by hand around and under other City and facility operator owned properties and, where necessary, the support and protection of such properties. The cost shall also include hand excavation in the area(s) of proposed abandoned pipe cut(s), cutting and/or burning of abandoned gas pipes and stockpile of removed sections of abandoned pipe and associated maintenance of traffic, blocking and temporary fencing if required. The unit price shall also cover sealing open ends remaining in the excavation with concrete or end caps (end caps to be supplied by facility operator) and backfilling of the area where the abandoned pipeline has been removed with clean backfill material. This item does not include any type of extra excavation, backfilling, compaction, pavement removal and/or restoration (temporary and permanent) associated with abandoned pipe removal ("lost trench"), all of which are covered under separate Section 6.06. The price shall also include allowance for any loss of productivity by the Contractor due to required facility operator work to remove pipe coating and prepare pipe for cutting as well as any change in Contractor excavation method, additional trucking and/or stockpiling costs.

SECTION 6.04 - Adjust Hardware To Grade Using Spacer Rings/Adaptors. (Street Repaving.)

1. Description:

Under this section, the Contractor shall provide all labor, supervision, materials, equipment, insurance and

incidentals required to adjust to final grade gas street surface hardware located within the contract area boundaries shown on the plans. The gas company operating in the area, (facility operator), owns these facilities. The work shall be performed in accordance with the contract plans, specifications and at the directions of the Resident Engineer in concurrence with authorized representative of the facility operator.

2. Materials:

The facility operator shall furnish and deliver all prefabricated hardware parts required. These include adaptors for the grade adjustment proper and new street hardware if existing ones are found to be defective, all in accordance with the facility operator standards and City rules and regulations. The Contractor shall notify the facility operator of the installation schedule at least three (3) business days before materials are required on the site. Should the facility operator fail to deliver the necessary material according to any schedule mutually agreed upon by the Contractor and facility operator, the City shall not be responsible for any delays attributable thereto, nor for the failure of delivery of such materials. On project where material storage is not permitted on site, the facility operator shall deliver the required material to the Contractor's yard and it shall be the Contractor's responsibility to transport the material to the work site when needed for installation. It shall also be the Contractor's responsibility to inspect the materials to be installed by him immediately upon delivery and advise the facility operator through its authorized representative, of all damaged materials. The Contractor at no additional expense to the City or the facility operator shall replace any material that is damaged or lost after the Contractor's inspection.

3. Method Of Measurement:

The Contractor shall be paid for each six (6) inch round box and/or nine (9) inch square box adjusted to grade regardless of adjustment height requirements.

4. Price To Cover:

The unit price bid for this item shall include all additional labor, supervision, insurance, equipment and, material (except those to be provided by the facility operator), required to adjust each box to grade as required in the contract plans and specifications. The bid price shall also include the removal of existing frames and covers from existing facilities to be salvaged and returned to the facility operator and, all material transportation from the Contractor's material storage yard to the work site. In addition the bid price shall include "chipping" around existing box using appropriate means and methods where grinding is required.

SECTION 6.05 - Adjust Hardware To Grade By Resetting. (Road Reconstruction.)

1. Description:

Under this item, the Contractor shall provide all labor, supervision, materials, equipment, insurance and incidentals required to adjust to the proposed grade gas street surface hardware located within the contract area boundaries shown on the plans. The gas company operating in the area, (facility operator), owns these facilities. The work shall consist of either building up or lowering or resetting the casting by removing the existing frame and cover building up or decreasing the existing installation, replacing the frame and/or cover if damaged or worn out, as determined by the Resident Engineer, with a new frame and/or cover furnished by the owner, and setting the frame and cover to new elevation. The work shall be performed in accordance with the contract plans, specifications and at the directions of the Resident Engineer.

2. Materials:

The facility operator shall furnish and deliver all new hardware parts required. The Contractor shall furnish materials such as mortar, bricks and concrete in compliance with contract requirements. At locations where high-early strength concrete is required under this contract to be placed adjacent to gas facilities, then the requirement for concrete shall be high-early strength complying with the current New York State Department of Transportation, Standard Specifications for Class F concrete. Existing castings may be replaced as required and deemed necessary by the Engineer and by City rules and regulations. The

Contractor shall install the new castings of various sizes furnished by the facility operator. The Contractor shall notify the facility operator of the installation schedule at least three (3) business days before materials are required on the site and, shall provide off-loading services to the facility operator. Should the facility operator fail to deliver the necessary material according to any schedule mutually agreed upon by the Contractor and facility operator, the City shall not be responsible for any delays attributable thereto, nor for the failure of delivery of such materials. Such delays shall be a matter of adjustment between the Contractor and the facility operator. On project where material storage is not permitted on site, the facility operator shall deliver the required material to the Contractor's yard and it shall be the Contractor's responsibility to transport the material to the work site when needed for installation. It shall also be the Contractor's responsibility to inspect the materials to be installed by him, immediately upon delivery and advise the facility operator through its authorized representative, of all damaged materials. The Contractor at no additional expense to the City or the facility operator shall replace any material that is damaged or lost after the Contractor's inspection.

3. Methods Of Construction:

The Contractor shall remove and reinstall existing castings or install new castings to the proposed grade. Setting and resetting the castings shall be done with mortar and brick according to the standards of the facility operator. Work shall be performed in a workmanlike manner. Castings that are deemed unacceptable for resetting shall remain the property of the facility operator and he shall be responsible for their removal and proper disposal from site. No traffic shall be allowed on adjusted street hardware until permitted by the Engineer.

4. Method Of Measurement:

The Contractor shall be paid for each gas hardware adjusted to grade regardless of size or adjustment height requirements (up or down).

5. Price To Cover:

The unit price bid for this item shall include all additional labor, supervision, insurance, equipment and, material (except those to be provided by the facility operator), required to adjust each gas hardware to grade as required in the contract plans and specifications. The bid price shall also include the removal of existing frames and covers from existing facilities; building up the existing installations with bricks and mortar, or lowering the existing installation by removing bricks and mortar; replacing damaged frames and/or covers with new frames and/or covers furnished by the facility operator; setting the frames and covers to the new elevations; protect existing installations; repair minor structural damages to existing installations prior to resetting frames; unloading of furnished castings at the Contractor's yard and transporting castings from the Contractor's yard to the job site as required; completing the work in accordance with the contract plans, specifications and, at the directions of the Engineer. In addition the bid price shall include "chipping" around existing gas facilities using appropriate means and methods where grinding is required.

SECTION 6.06 - Special Care Excavation And Backfilling.

1. Description:

Under this section, the Contractor shall provide all labor, materials, equipment, insurance and incidentals required to support and protect the integrity of live gas facilities including mains, services, related structures and appurtenances during excavations. The gas company operating in the area, (facility operator), owns these facilities. The work shall be performed in accordance with the contract plans, specifications and at the directions of the Resident Engineer in consultation with authorized representatives of the facility operator.

2. Applicability Of Section:

This section shall apply to live gas facilities of various sizes located within two (2) feet of any face of

unsheeted excavation, (unsheeted excavation refers to any excavation performed for city work and includes excavations performed that are to be subsequently sheeted using approved methods) and paralleling or, encroaching any face of excavation. Also, for crossings greater than forty-five (45) degrees and/or located at a cover depth greater than five (5) feet from existing street surface. Parallel facilities are not exposed at any time during excavation (See "Gas Cost Sharing Work Standard Sketch No. 5"). Encroaching facilities are partially exposed inside the limit of excavation (See "Gas Cost Sharing Work Standard Sketch No. 5"). This section shall also apply to gas facilities crossing catch basins excavation, and catch basins sewer connections (chutes) trench excavation only when extra depth (covered in other section), is not required for chutes installations because of such utilities interferences (See "Gas Cost Sharing Work Standard Sketch No. 3"). This section shall also apply to gas services (if shown or otherwise listed in contract documents) crossing unsheeted excavations for water mains, gas facilities crossing fire hydrant branch connections, house sewer and/or water service connections excavations. This section shall also apply for so called "loss trench", as described further, and for additional excavation (pavement and/or soil), backfilling, compaction, roadway base and pavement restoration due to abandoned gas facilities, only if removed by Contractor. If operating status of gas facilities cannot be determined prior to excavation then such facilities shall be considered live and this section shall fully apply. The excavation around fully exposed live gas facilities along and within limits of excavation (not crossings) shall be covered by this section also (not shown on "Gas Cost Sharing Work Standard Sketch No. 5"), however the support requirement, if any is required, of such facilities is beyond the scope of these specifications and therefore shall be the responsibility of facility operator to determine and prescribe, at no cost to the City contract, but shall be a matter of adjustment between the Contractor and facility operator.

3. Payment Restriction:

No special care excavation shall be paid for abandoned gas facilities paralleling and/or encroaching excavation and therefore are not in direct interference with City work. Except as allowed in this section, the bid item specified under this section shall not be used in combination with items covered under other sections for work done due to a particular gas facility. This item shall not be paid for new gas facilities when trenching for such new facilities has been performed by the Contractor of record in common with trench excavation for City Work (overlapping trench limits). The cost of excavating with care as defined in this section shall be deemed included in the cost of trench excavation for the new gas facilities. This restriction shall apply even if such gas common trench excavation is not part of the contract. If facilities are in direct interference with City work, meaning that "Minimum Clearances" described in "General Provisions; Gas Cost Sharing Work Paragraph No. 8" cannot be maintained and excavation has to be temporarily or permanently abandoned then this particular location shall become a test pit and dealt with as specified in Section 6.07 and "General Provisions; Gas Cost Sharing Work Paragraphs Nos. 2 and 8".

4. Method Of Construction:

All excavation in the vicinity of gas facilities shall be as required by NYS Industrial Code 753. Where these facilities are paralleling and located two (2) feet or less from the limits of the proposed excavation, the Contractor shall use hand excavation methods (pick and shovel or hand held power tools) to ascertain the clearances of these facilities with respect to the proposed excavation. Once the location of these facilities with respect to the proposed excavation is verified to the satisfaction of the Resident Engineer, the Contractor shall then proceed with a combination of hand and machine excavation as required preserving the integrity of the facilities. The installation of timber supports or underpinning, when soil foundation cannot fully support partially exposed pipes, may be required to prevent pipe movement as directed by the Resident Engineer.

5. Method Of Payment:

The unit price for this work item shall be based on cubic yard (CY) of average excavation with care and, is to be considered as an incremental cost for performing City work with gas facilities interferences.

6. Method Of Measurement:

A. For Paralleling Facilities: Volume calculated as: Depth as measured from existing street surface to

the bottom of unsheeted trench excavation allowable by OSHA regulations, multiplied by, the width measured as one (1) foot from the face of excavation toward the center of excavation, multiplied by the length of parallel facility, divided by twenty-seven (27) cubic feet per cubic yard (See “Gas Cost Sharing Work Standard Sketch No. 5”). The gas facility is no longer considered to be in interference once sheeting has been installed, therefore no further compensation for paralleling facilities as described above will be made.

B. For Encroaching Facilities: Volume calculated as: Depth of trench as allowable by OSHA, maximum up to five (5) feet multiplied by, the width of partially exposed pipe plus one (1) foot, multiplied by the length of facility encroachment, divided by twenty-seven (27) cubic feet per cubic yard (See “Gas Cost Sharing Work Standard Sketch No. 5”).

C. Fully Exposed Gas Facilities: (Not shown on “Gas Cost Sharing Work Standard Sketch No. 5”) along and inside trench and/or crossing trench at an angle greater than forty-five (45) degrees and/or a cover depth greater than five (5) feet from the existing street surface. The volume shall be measured as the depth of trench excavation multiplied by the distance measured along the sheeting line between two (2) points of intersections of the gas facilities and the sides of trench excavation, multiplied by the width of trench excavation.

D. For Additional Excavation And Restoration Due To So Called "Loss Trench", When The Integrity Of Pavement And Soil Above And Around Existing Live Gas Facilities Cannot Be Maintained Due To Its Lack Of Cohesiveness: Volume shall be calculated as: Depth of unsheeted trench excavation multiplied by width measured as distance of facility from closest edge of unsheeted excavation plus, width of facility proper plus, one (1) foot or a maximum width of three (3) feet multiplied by length of facility fully exposed divided by, twenty-seven (27) cubic feet per cubic yard (not shown on “Gas Cost Sharing Work Standard Sketch No. 5”).

E. For Facilities Crossing Excavation For Catch Basins, Or Chutes Installations (When NYCDEP Funded) Or Fire Hydrant Branch Connections, Or Unsheeted Water Main Trench, Or House Sewer And/Or Water Services: Volume calculated as: Depth as measured from existing street surface to the bottom of the trench excavation multiplied by, the width taken as the outside diameter of pipe or the width of structure plus one (1) foot on either side (two (2) feet), multiplied by, the length of exposed facility crossing the trench, divided by twenty-seven (27) cubic feet per cubic yard (not shown on “Gas Cost Sharing Work Standard Sketch No. 5”).

Overlapping volume dimensions measured as described above may occur when multiple facilities are paralleling excavations, encroaching excavations or crossing catch basins and catch basin chute installations. In such cases, all such facilities shall be counted as one limited by the extreme pipes, faces (See “Gas Cost Sharing Work Standard Sketch No. 2”). The volume shall then be calculated as described above.

7. Price To Cover:

The bid price shall also cover all additional supervision, labor, material, equipment and insurance necessary to excavate while protecting and maintaining (excluding supports for fully exposed live gas) gas facilities without disruption of service to the public and in accordance with contract specifications. The price shall also include, changes of sheeting method and excavation width configuration where necessary to accommodate gas facilities in their existing locations; difficulties during the installation of catch basins, chute connections, hydrant branch, and house sewer and water connections under or over gas facilities; loss of productivity due to slower rate of excavation (special care) during excavation, including the use of such methods as: hand excavation around existing single and multiple facilities, extra excavation and backfilling due to lost trench because of existing and adjacent gas facilities, compaction, removal of sheeting from the facilities, extra roadway base restoration and temporary pavement, associated maintenance and protection of traffic, barricades, and traffic plates that may be required to temporarily close and/or complete the work.

SECTION 6.07 - Test Pits For Gas Facilities.

1. Description:

Under this section, the Contractor shall furnish all labor, materials, insurance, equipment and appliances necessary to excavate, sheet and, maintain test pits at locations approved by the Resident Engineer in consultation with the facility operator. Test pits shall be dug in order to ascertain exact locations, cover and invert elevations, clearances, alignment and operating status (live or dead) of existing gas facilities. The Contractor shall inspect jointly with the Resident Engineer and facility operator, gas facilities and other structures uncovered, take all relevant measurements and elevations as directed by the Resident Engineer. Tests to determine operating status of gas facilities shall be performed by facility operator. The pits shall be covered with steel plates during daytime nonworking hours, and uncovered, as required, until the inspection work is completed. Testing of gas facilities may require a maximum of four (4) hours. Then, the pits shall be backfilled with clean fill, and resurfaced with temporary pavement. All traffic shall be maintained and all safety measures as stipulated shall be complied with.

2. Methods Of Construction:

A. Excavation: Existing pavement to be removed shall be neatly cut along lines of removal with a saw or other approved equipment which leaves a neat straight joint line along the juncture with subsequently replaced pavement. Excavation in the vicinity of utilities and other structures shall be performed using hand tools. Use of hand operated pneumatic and electric jackhammers will be permitted only for breaking pavement and removal of masonry, concrete and boulders, or as otherwise directed by the Resident Engineer. The Contractor shall properly dispose of all materials excavated from test pits away from site. Test pits shall be excavated at locations shown on the contract drawings or as directed by the Resident Engineer. Additional test pits may be required and shall be excavated where required, as ordered by the Resident Engineer. All test pits shall be excavated to a depth and size necessary to locate the existing facilities. Sheeting shall be used when depth of excavation exceeds five (5) feet. The sheeting required shall be furnished and installed in full compliance with the State of New York and Federal Safety Codes requirements and as specified in contract, whichever is more stringent. Care shall be taken that no existing gas facilities or other structures are broken or damaged. All broken or damaged facilities shall be reported immediately to facility operator who shall decide whether such facilities shall be repaired or replaced by company forces or by City contractor and in conformance with “General Provisions; Gas Cost Sharing Work Paragraph No. 9”. Contractor shall excavate all material encountered, including large masses of concrete, cemented masonry and boulders, as directed by the Resident Engineer. Any type of excavation protection used, shall satisfy the following:

   (a) Industrial Code Rule 753.
   (b) Prevent injury to workers and the public, and avoid damage to existing water, sewer, and gas pipes or other structures, and to pavements and their foundations, through caving or sliding of the banks of the excavation.

   Should it become necessary, as determined by the Resident Engineer, to enlarge any test pit in any dimension after sheeting has been placed, the Contractor shall remove portions of the sheeting, as necessary, enlarge the test pits as directed, and replace the sheeting without additional compensation for this work other than for the additional volume of material excavated.

B. Maintenance Of Test Pits: Excavated test pits shall be maintained free of debris and kept dry by the Contractor in order to permit the inspection and measurements and to determine the locations of facilities. In order to accomplish this, Contractor shall, upon completion of excavation and placement of sheeting (if depth greater than five (5) feet), furnish and install adequate steel plates and posting over the excavated pits and shall temporarily remove all equipment debris and workers, and relocate barricades in order to open the full width of street to traffic during nonworking hours. The Contractor shall then, at no additional cost, relocate such barricades, barrels, cones and other warning devices and remove steel plates, as and when directed by the Resident Engineer to facilitate the inspection of exposed facilities. When work is being performed and the pits are not covered with steel plates, the

Contractor shall provide complete and safe access to the test pits as may be required, and he shall provide construction barricades and maintain traffic at all times as shown or as directed by the Resident Engineer. Upon completion of test pit inspection by the Resident Engineer, the pit shall be backfilled by the Contractor as specified in contract, except that backfill material shall conform to contract specifications for such purpose.

C. Pavement And Sidewalk Restoration: After backfilling is completed, the Contractor shall construct a temporary pavement consisting of a minimum of four (4) inches thick asphaltic concrete mixture in roadway areas or a two (2) inches thick asphaltic concrete mixture in sidewalk areas in order to maintain existing pedestrian and vehicular traffic. This temporary pavement shall be maintained until permanent pavement and sidewalk replacement is constructed as specified in contract.

3. Measurements:

The quantity to be measured for payment shall be the number of cubic yards of material removed from within the limits of the pit dimensions as directed by the Resident Engineer. The volume occupied by existing pipes or other structures remaining within the maximum payment lines will not be deducted from the total volume measured except, where the cross sectional area of these facilities exceeds four (4) square feet. As determined by the Resident Engineer, the quantity measured for payment may be proportionate to a fair and reasonable estimate of gas responsibility in the total volume excavated.

4. Price To Cover:

The contract price bid per cubic yard for test pits shall cover all additional costs of labor, material, insurance, equipment, appliances and incidentals required to excavate test pits, including removal and disposal of excavated materials, sheeting, steel plating, backfill, compaction and temporary pavement and sidewalk restoration all in accordance with the specifications and as directed by the Resident Engineer. The price shall also include the cost of providing safe access to the excavation by facility operator for the performance of certain test to determine operating status of gas facilities prior to City work. The price shall also include support and protection of all gas facilities crossing excavation, paralleling and/or encroaching any face of excavation.

SECTION 6.08A – Pier and/or Plate Method of Protection for Ductile Iron Water main with less than 24" Cover

A. Description:

Under this item, the Contractor shall provide all labor, materials, equipment, insurance and incidentals required to protect ductile iron water mains that are installed with a cover of 24 inches or less crossing over gas facilities of various sizes. The work shall be performed in accordance with the contract plans, specifications and at the direction of the facility operator(s), upon approval from the Resident Engineer.

B. Materials:

The Contractor shall supply all materials (concrete, beams, plates, etc.) necessary to provide the pier and plate method of protection as shown on BWS Standard Drawing No. 46464-Z.

C. Method of Construction:

The Contractor shall provide pier and plate protection in accordance with BWS Standard Drawing No. 46464-Z. The Contractor shall support, maintain and accommodate the water main and all other utility facilities during the installation of the pier and plate components. The Contractor shall be solely and totally responsible for the disturbances and/or any damages to such facilities.

D. Method of Measurement:

The quantity to be measured for payment shall be each (EA.) location wherein an additional area of square foot (S.F.) of steel plate is required to be installed to protect ductile iron water mains with a cover of 24 inches or less crossing over gas facilities of various sizes, as directed by the Facility Operator(s) upon approval from the Resident Engineer. The additional area of square foot (S.F.) of steel plate shall be in accordance with BWS Standard Drawing No. 46464-Z.

E. Price to Cover:

The price shall cover the cost of all supervision, labor, material, equipment, and incidentals necessary to construct the specified method of protection. The work shall also cover the cost to cut, break, and remove additional pavement, additional excavation, sheeting, maintenance of traffic, traffic plates, and to furnish and install additional backfill and pavement restoration. This item does not cover the costs for special care excavation around gas facilities that are covered under separate items.

F. References:

1. BWS Standard Drawing No. 46464-Z.

SECTION 6.09 - Trench Excavation and Backfill for New Gas Mains and Services (For National Grid Work Only)

1. Description:

Under this section, the contractor shall furnish all labor, materials, equipment, insurance, permits and incidentals required to break/remove roadway and sidewalk pavement, excavate, backfill and restore gas trenches. The trench to be excavated shall be determined by the size of the gas facility to be installed. The work shall be performed in accordance with applicable specifications, and/or at the direction of the Resident Engineer in consultation with the facility operator.

2. Materials:

All materials used to excavate and prepare trenches shall be supplied by the Contractor and be approved by the facility operator in consultation with the Resident Engineer.

3. Method of Construction:

Excavation – The Contractor shall saw cut and/or break and remove existing roadway which may include but is not limited to, asphalt, concrete and cobblestone, utilizing approved equipment that leaves a neat straight joint line along the juncture with subsequently replaced pavement. Prior to starting the trenching operation, the contractor shall excavate the appropriate gas main tie-in pits at the extremities of the gas main sections to be replaced. Test pits shall be excavated to determine exact location of all tie-in pits and at appropriate intervals along proposed trench excavation to verify lane and clearances as shown on the contract plans. The tie-in pits shall be adequately protected by the contractor using wood fencing or steel traffic plates until such time when the facility operator has completed the tie-in work. The Contractor shall be permitted to excavate utilizing a combination of machine and hand excavation, as field conditions warrant, and as directed by the facility operator. The trench shall be adjusted so as to provide for a nominal cover on the new gas facilities or as required based on field conditions, applicable specifications, or as directed by the facility operator in consultation with the Resident Engineer. The width of the trench shall be as directed by the facility operator in consultation of the Resident Engineer. The bottom of the trench shall be graded smooth with a minimum cushion of 3 inches of clean sand and in conformance with applicable specification and be compacted, to minimize initial settlement and to avoid "point" support of new gas facilities. All stones projecting into the trench bottom shall be removed, and the voids backfilled before the new gas facilities are installed. Where streets are not to final grade, the cover shall be measured from the final grade, or the existing grade, whichever provides the deeper trench. Excavation in the vicinity of utilities and other structures shall be performed using hand tools. The contractor shall properly dispose of all materials excavated away from site. Size and location of excavation shall be as directed by the facility

operator in consultation with the Resident Engineer. Trenches shall be excavated to a depth and size necessary to facilitate the installation of the new gas facility and in conformance with the applicable specification. All existing facilities that are encountered during trench excavating shall be protected in a manner suitable to the facility operator in consultation with the Resident Engineer. Tight sheeting shall be used, as required, based on field conditions and/or when the depth of excavation is equal to or greater than five feet. Skeleton type sheeting will not be permitted. The sheeting required shall be furnished and installed in full compliance with the State of New York and Federal Safety Code requirements and in compliance with applicable specifications and/or as directed by the facility operator in consultation with the Resident Engineer. Care shall be taken that no existing gas facilities or other structures are broken or damaged. Contractor shall excavate all material encountered necessary to facilitate the installation of the new gas facilities, and as directed by the facility operator. Care should be taken to avoid damage to existing utility facilities and structures, and to pavements and their foundations, and to avoid caving or sliding banks within the excavation.

Maintenance of Trench Excavation - Excavated trenches shall be maintained free of debris and kept dry by the contractor. In order to accomplish this, contractor shall, upon completion of excavation and placement of sheeting (as required and/or if depth is equal to or greater than five feet), furnish and install adequate steel plates, as directed by the facility operator in consultation with the Resident Engineer, and posting over the excavated trenches and shall temporarily remove all equipment debris and workers, and relocate barricades in order to open the full width of street to traffic during non-working hours, as required based on DOT requirements. National Grid forces will perform all live gas main connections, dead gas main cut-outs, and/or service work associated with disconnecting and reconnecting from old to new gas main The Contractor shall then, at no additional cost, relocate such barricades barrels, cones and other warning devices and remove steel plates, as and when directed by the facility operator in consultation with the Resident Engineer to facilitate the installation of the new gas facilities. When work is being performed and the excavations are not covered with steel plates, the Contractor shall provide complete and safe access to the trench as may be required, and shall provide construction barricades and maintain traffic at all times as shown or as directed by the facility operator in consultation with the Resident Engineer. The contractor has the responsibility to maintain and set to grade all National Grid hardware during backfill and pavement restoration. Upon completion of installation of the new gas facility, the trench excavation shall be backfilled by the contractor in accordance with Contract requirements and all backfill material shall conform to contract specifications for such purpose.

Pavement and Sidewalk Restoration - After backfilling is completed, the contractor shall install temporary pavement consisting of six inches (6”) thick asphaltic concrete mixture in roadway areas or a two inches (2”) thick asphaltic concrete mixture in sidewalk areas in order to maintain existing pedestrian and vehicular traffic. This temporary pavement shall be maintained until permanent replacement as specified in contract. Permanent pavement restoration shall be as required by the appropriate contract specifications and as directed by the Resident Engineer.

4. Method of Measurement:

The quantity to be measured for payment shall be the number of cubic yards (C.Y.) of trench actually excavated, including roadway pavement, base and/or sidewalk concrete removed within the limits of the trench as directed by the Resident Engineer in consultation with the facility operator. The volume occupied by existing pipes or other structures will be deducted from the total volume measured as shown on contract drawing(s) Title: EP-7 SECT. 6.09 GAS SPECIALTY CONTRACTOR WORK, or as encountered based on existing field conditions.

5. Price to Cover:

The unit price bid per cubic yard for excavation shall include the cost of all supervision, labor, material, equipment, insurance and incidentals necessary to complete excavation trenches, including backfill, compaction testing and restoration of trenches and tie-ins pits as specified or shown on the contract, plans. The bid price shall also include the cost of coordinating the sewer and water main work to be performed by the contractor with the gas installation work to be performed by others. The price shall also include, associated maintenance of traffic, and traffic plates and openings and closings of plates as may be required

in order to provide access to the facility operator during the new gas facility installation, and installing, removing and maintaining tight sheeting that may be required, cut, break and remove various thickness of surface and base pavement, excavate by hand, furnish, place and compact, in compliance with DOT requirements, clean sand backfill following installation of the gas facility. Any required removing, trucking, storing, and disposing of material shall be deemed included in the unit price. The price shall also include the cost of providing temporary pavement restoration. Permanent pavement restoration shall be deemed included in this item, as required and as directed by the Resident Engineer.

SECTION 6.09a Trench Excavation and Backfill for New Gas Mains and Services (For Con Edison Work Only)

1. Description:

Under this section, the contractor shall furnish all labor, materials, equipment, insurance, permits and incidentals required to break/remove roadway and sidewalk pavement, excavate, backfill and restore gas trenches. The trench to be excavated shall be determined by the size of the gas facility to be installed. The work shall be performed in accordance with applicable specifications, and/or at the direction of the Resident Engineer in consultation with the facility operator.

2. Materials:

All materials used to excavate and prepare trenches shall be supplied by the Contractor and be approved by the facility operator in consultation with the Resident Engineer. Clean sand backfill material shall be used and shall conform to Con Edison specification EO-1181-rev.6, General Specification for Backfilling of Trench and Small Openings.

3. Method of Construction:

Excavation – The Contractor shall saw cut and/or break and remove existing roadway which may include but is not limited to, asphalt, concrete and cobblestone, utilizing approved equipment that leaves a neat straight joint line along the juncture with subsequently replaced pavement. Prior to starting the trenching operation, the contractor shall excavate the appropriate gas main tie-in pits at the extremities of the gas main sections to be replaced. Test pits shall be excavated to determine exact location of all tie-in pits and at appropriate intervals along proposed trench excavation to verify lane and clearances as shown on the contract plans. The tie-in pits shall be adequately protected by the contractor using wood fencing or steel traffic plates until such time when the facility operator has completed the tie-in work. The Contractor shall be permitted to excavate utilizing a combination of machine and hand excavation, as field conditions warrant, and as directed by the facility operator. The trench shall be adjusted so as to provide for a nominal cover on the new gas facilities or as required based on field conditions, applicable specifications, or as directed by the facility operator in consultation with the Resident Engineer. The width of the trench shall be as directed by the facility operator in consultation of the Resident Engineer. The width and depth of the trench shall conform to Con Edison Gas Operations drawing 309495 rev. 4, Trench Excavation for Gas Mains Up to 350 PSIG, or as directed by the facility operator in consultation of the Resident Engineer. The bottom of the trench shall be graded smooth with a minimum cushion of 3 inches of clean sand and in conformance with applicable specification and be compacted, to minimize initial settlement and to avoid "point" support of new gas facilities. All stones projecting into the trench bottom shall be removed, and the voids backfilled before the new gas facilities are installed. Where streets are not to final grade, the cover shall be measured from the final grade, or the existing grade, whichever provides the deeper trench. Excavation in the vicinity of utilities and other structures shall be performed using hand tools. The contractor shall properly dispose of all materials excavated away from site. Size and location of excavation shall be as directed by the facility operator in consultation with the Resident Engineer. Trenches shall be excavated to a depth and size necessary to facilitate the installation of the new gas facility and in conformance with the applicable specification. All existing facilities that are encountered during trench excavating shall be protected in a manner suitable to the facility operator in consultation with the Resident Engineer. Tight sheeting shall be used, as required, based on field conditions and/or when the depth of excavation is equal to or greater than five feet. Skeleton type sheeting will not be permitted. The sheeting required shall be furnished and installed in full compliance with the State of New York and Federal Safety Code requirements

and in compliance with applicable specifications and/or as directed by the facility operator in consultation with the Resident Engineer. Care shall be taken that no existing gas facilities or other structures are broken or damaged. Contractor shall excavate all material encountered necessary to facilitate the installation of the new gas facilities, and as directed by the facility operator. Care should be taken to avoid damage to existing utility facilities and structures, and to pavements and their foundations, and to avoid caving or sliding banks within the excavation.

Maintenance of Trench Excavation - Excavated trenches shall be maintained free of debris and kept dry by the contractor. In order to accomplish this, contractor shall, upon completion of excavation and placement of sheeting (as required and/or if depth is equal to or greater than five feet), furnish and install adequate steel plates, as directed by the facility operator in consultation with the Resident Engineer, and posting over the excavated trenches and shall temporarily remove all equipment debris and workers, and relocate barricades in order to open the full width of street to traffic during non-working hours, as required based on DOT requirements. Con Edison forces will perform all live gas main connections, dead gas main cut-outs, and/or service work associated with disconnecting and reconnecting from old to new gas main The Contractor shall then, at no additional cost, relocate such barricades barrels, cones and other warning devices and remove steel plates, as and when directed by the facility operator in consultation with the Resident Engineer to facilitate the installation of the new gas facilities. When work is being performed and the excavations are not covered with steel plates, the Contractor shall provide complete and safe access to the trench as may be required, and shall provide construction barricades and maintain traffic at all times as shown or as directed by the facility operator in consultation with the Resident Engineer. The contractor has the responsibility to maintain and set to grade all Con Edison hardware during backfill and pavement restoration. Upon completion of installation of the new gas facility, the trench excavation shall be backfilled by the contractor in accordance with Contract requirements and all backfill material shall conform to contract specifications for such purpose.

Pavement and Sidewalk Restoration - After backfilling is completed, the contractor shall install temporary pavement consisting of six inches (6”) thick asphaltic concrete mixture in roadway areas or a two inches (2”) thick asphaltic concrete mixture in sidewalk areas in order to maintain existing pedestrian and vehicular traffic. This temporary pavement shall be maintained until permanent replacement as specified in contract. Permanent pavement restoration shall be as required by the appropriate contract specifications and as directed by the Resident Engineer.

4. Method of Measurement:

The quantity to be measured for payment shall be the number of cubic yards (C.Y.) of trench actually excavated, including roadway pavement, base and/or sidewalk concrete removed within the limits of the trench as directed by the Resident Engineer in consultation with the facility operator. The volume occupied by existing pipes or other structures will be deducted from the total volume measured as shown on contract drawing(s) Title: EP-7 SECT. 6.09 GAS SPECIALTY CONTRACTOR WORK, or as encountered based on existing field conditions.

5. Price to Cover:

The unit price bid per cubic yard for excavation shall include the cost of all supervision, labor, material, equipment, insurance and incidentals necessary to complete excavation trenches, including backfill, compaction testing and restoration of trenches and tie-ins pits as specified or shown on the contract, plans. The bid price shall also include the cost of coordinating the sewer and water main work to be performed by the contractor with the gas installation work to be performed by others. The price shall also include, associated maintenance of traffic, and traffic plates and openings and closings of plates as may be required in order to provide access to the facility operator during the new gas facility installation, and installing, removing and maintaining tight sheeting that may be required, cut, break and remove various thickness of surface and base pavement, excavate by hand, furnish, place and compact, in compliance with DOT requirements, clean sand backfill following installation of the gas facility. Any required removing, trucking, storing, and disposing of material shall be deemed included in the unit price. The price shall also include the cost of providing temporary pavement restoration. Permanent pavement restoration shall be deemed included in this item, as required and as directed by the Resident Engineer.

GAS COST SHARING STANDARD SPECIFICATIONS
SCHEDULE GCS-A

Average rate charged by utility companies to Disconnect and Reconnect Gas Services:

1. National Grid - $586.90 per Service/and Visit
2. Con Edison - $524.00 per Service/and Visit

IV - STANDARD SKETCHES; GAS COST SHARING WORK

Hereinafter attached are the following Standard Sketches for Gas Cost Sharing Work:

Sketch No. 1 - Support Requirements For Gas Mains And Services Crossing Excavation Greater Than 4' - 0" Wide At Any Angle

Sketch No. 1A - Support Requirements For Gas Mains Over 16" Diameter Up To And Including 48" Diameter Crossing Excavation At Any Angle

Sketch No. 2 - Typical Methods Of Measurement For Gas Crossings

Sketch No. 3 - Utility Crossings During Catch Basin Chute Connection Pipe Installation

Sketch No. 4 - Utility Crossings During Catch Basin Chute Connection Pipe Installation (Extra Depth)

Sketch No. 5 - Gas Main Encroachment On And/Or Parallel To Excavation Of Unsheeted Trench

GAS COST SHARING WORK (SKETCH NO. 1)

SUPPORT REQUIREMENTS FOR GAS MAINS AND SERVICES CROSSING EXCAVATION GREATER THAN 4'-0" WIDE AT ANY ANGLE

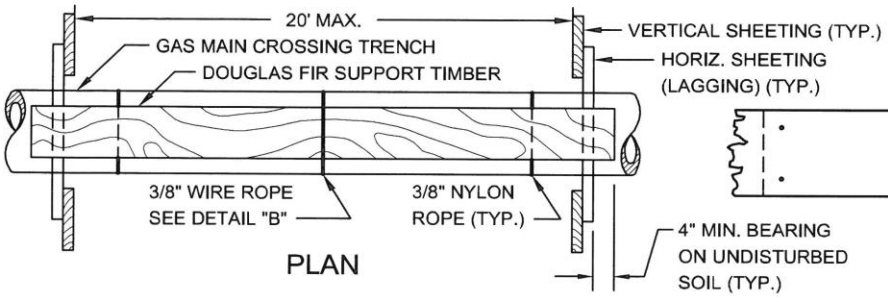

PLAN

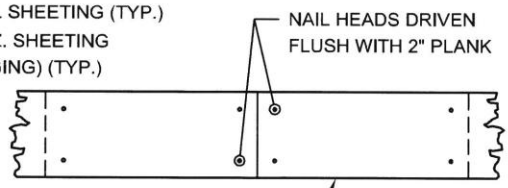

PLAN

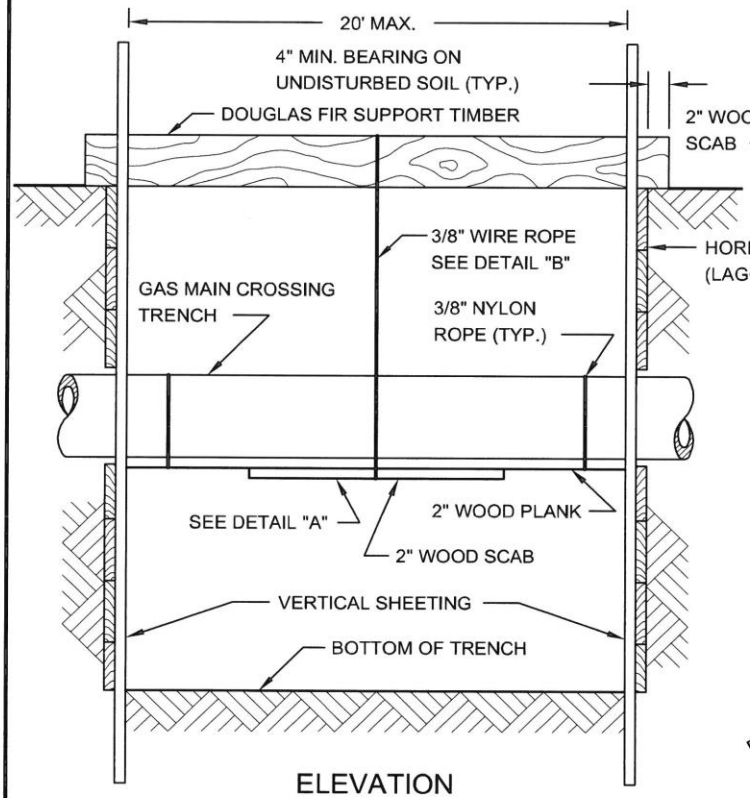

ELEVATION

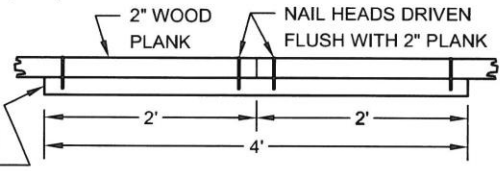

ELEVATION

DETAIL "A"

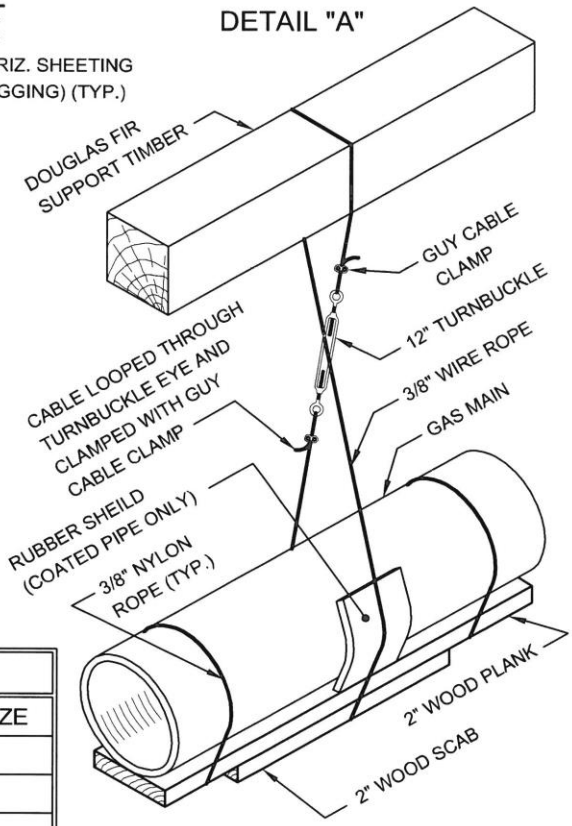

DETAIL "B"

CABLE SUPPORT		TIMBER SUPPORT	
MAIN TYPE	SPACING	MAIN SIZE	TIMBER SIZE
CAST IRON	4' O.C. MAX.	UP TO 6"	6" X 6"
STEEL	10' O.C. MAX.	8" TO 10"	8" X 8"
PLASTIC	10' O.C. MAX.	12" TO 16"	10" X 10"

REVISED OCT. 2004 - L. ADRIEN
REVISED JUNE 1998 - J. WONG / W. PATALANO/P. MOY

GAS COST SHARING WORK (SKETCH NO. 1A)

SUPPORT REQUIREMENTS FOR GAS MAINS OVER 16" DIAMETER UP TO AND INCLUDING 48" DIAMETER CROSSING EXCAVATION AT ANY ANGLE

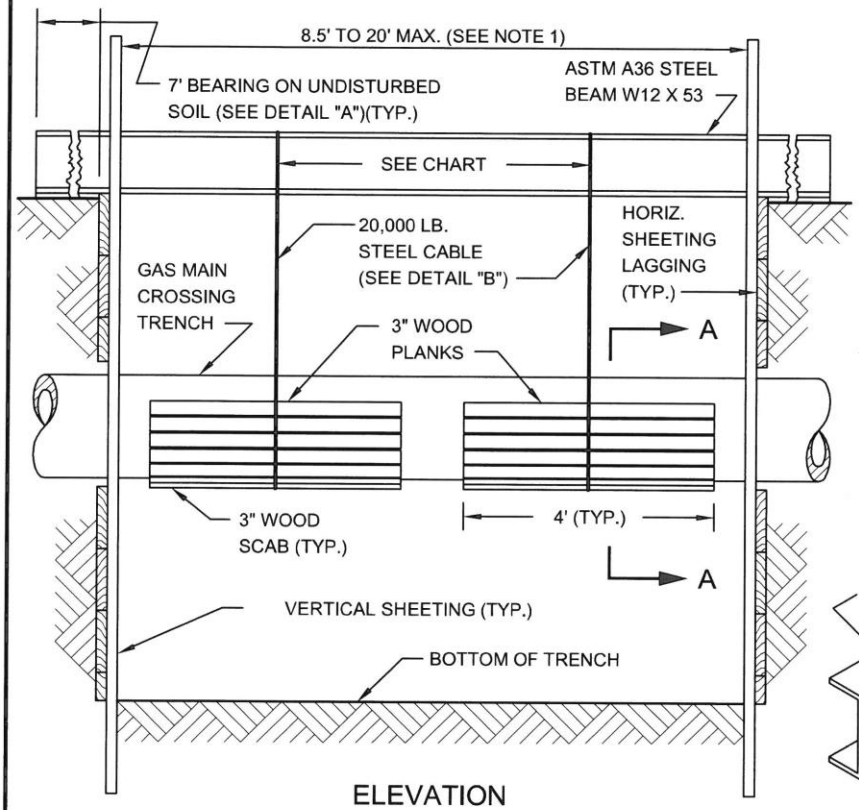

ELEVATION

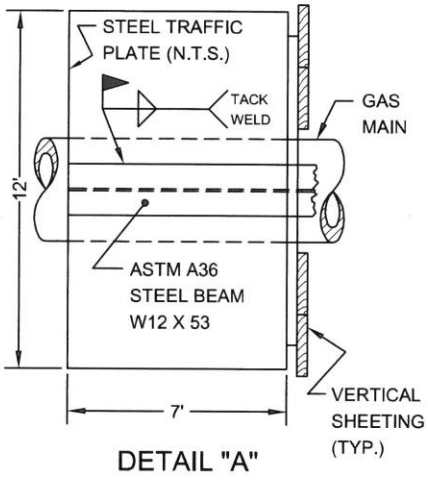

DETAIL "A"

CABLE SUPPORT	
MAIN TYPE	SPACING
CAST IRON	4' O.C. MAX.
STEEL	10' O.C. MAX.

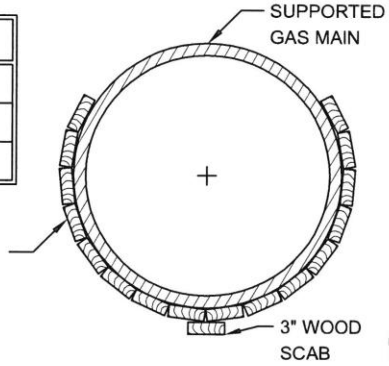

SECTION A-A

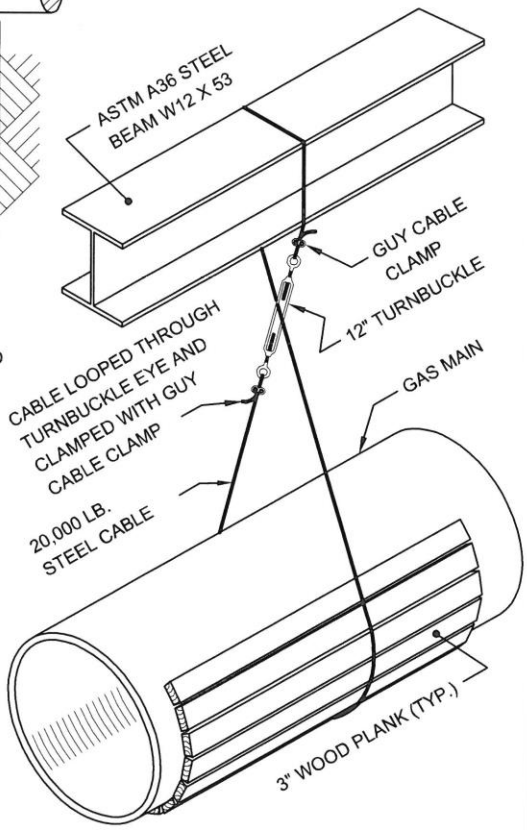

DETAIL "B"

NOTES:

(1) NO SUPPORT IS REQUIRED FOR GAS MAINS OVER 16" DIA. UP TO AND INCLUDING 48" DIA. CROSSING TRENCHES LESS THAN 8.5' WIDE.

(2) UNDERMINE A MAXIMUM OF 8.5 L.F. OF CAST IRON GAS MAIN AT A TIME.

(3) SET STEEL CABLE OVER 3" WOOD PROTECTIVE PLANKS AND PLACE AN ADDITIONAL 3" SCAB ON THE BOTTOM OF THE GAS MAIN.

(4) ADJUST STEEL CABLE UNTIL DEAD WEIGHT OF THE UNDERMINED GAS MAIN HAS BEEN TAKEN UP BY THE OVERHEAD STEEL BEAM SUPPORT.

(5) ALL SUPPORTS AND STEEL CABLES CAN BE REOMVED ONLY AFTER THE REQUIRED BACKFILL (AROUND AND BELOW GAS MAIN) HAS BEEN COMPACTED IN ACCORDANCE WITH NEW YORK CITY STANDARDS AND AT THE DIRECTIONS OF THE ENGINEER.

REVISED OCT. 2004 - L. ADRIEN
REVISED JUNE 1998 - J. WONG / W. PATALANO/P. MOY

GAS COST SHARING WORK (SKETCH NO. 2)

TYPICAL METHODS OF MEASUREMENT FOR GAS CROSSINGS

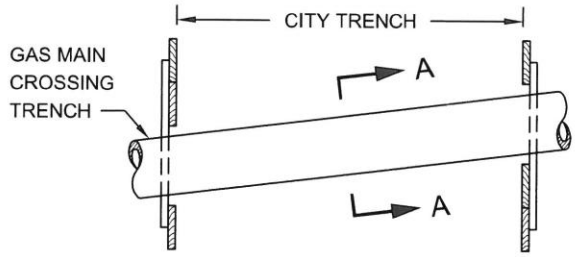

SINGLE FACILITY CROSSING

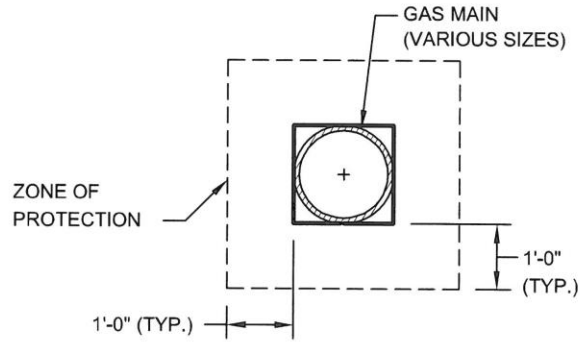

SECTION A-A

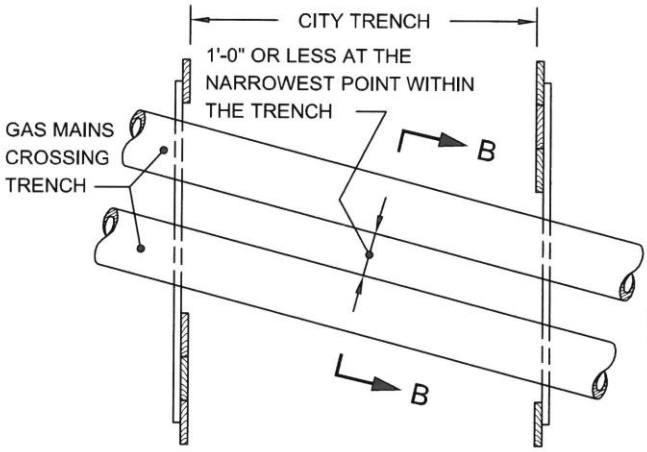

MULTIPLE FACILITIES
(GAS MAINS AT SAME ELEVATION)

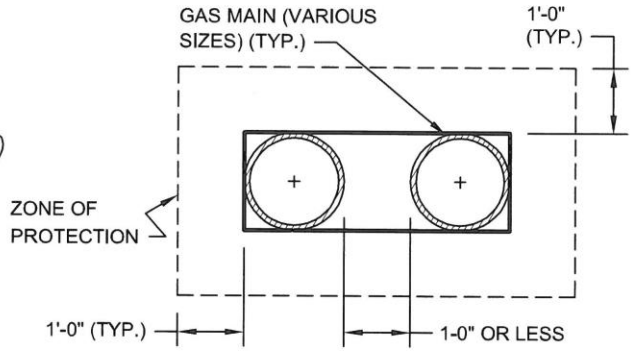

SECTION B-B

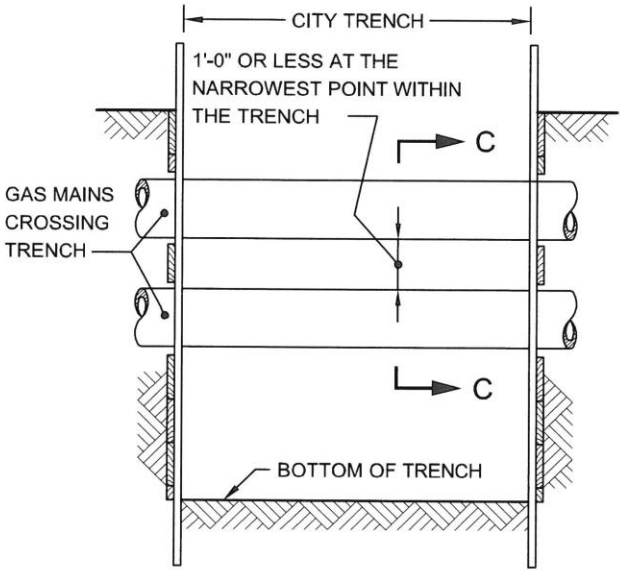

MULTIPLE FACILITIES
(ONE CROSSING AT DIFFERENT ELEVATIONS)

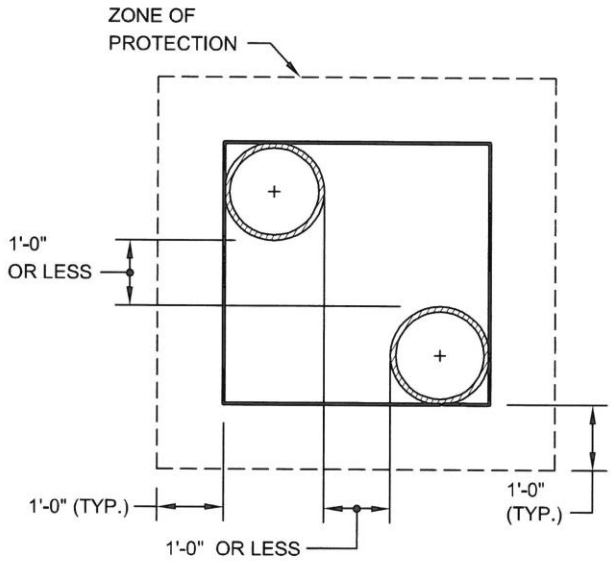

SECTION C-C

NOTE:

GAS MAINS MAY OR MAY NOT BE PARALLEL TO EACH OTHER.

REVISED SEPT. 2004 - J. ADRIEN
REVISED SEPT. 2004 - J. WONG/W. PATALANO/P. MOY

GAS COST SHARING WORK (SKETCH NO. 3)

UTILITY CROSSINGS DURING CATCH BASIN CHUTE CONNECTION PIPE INSTALLATION

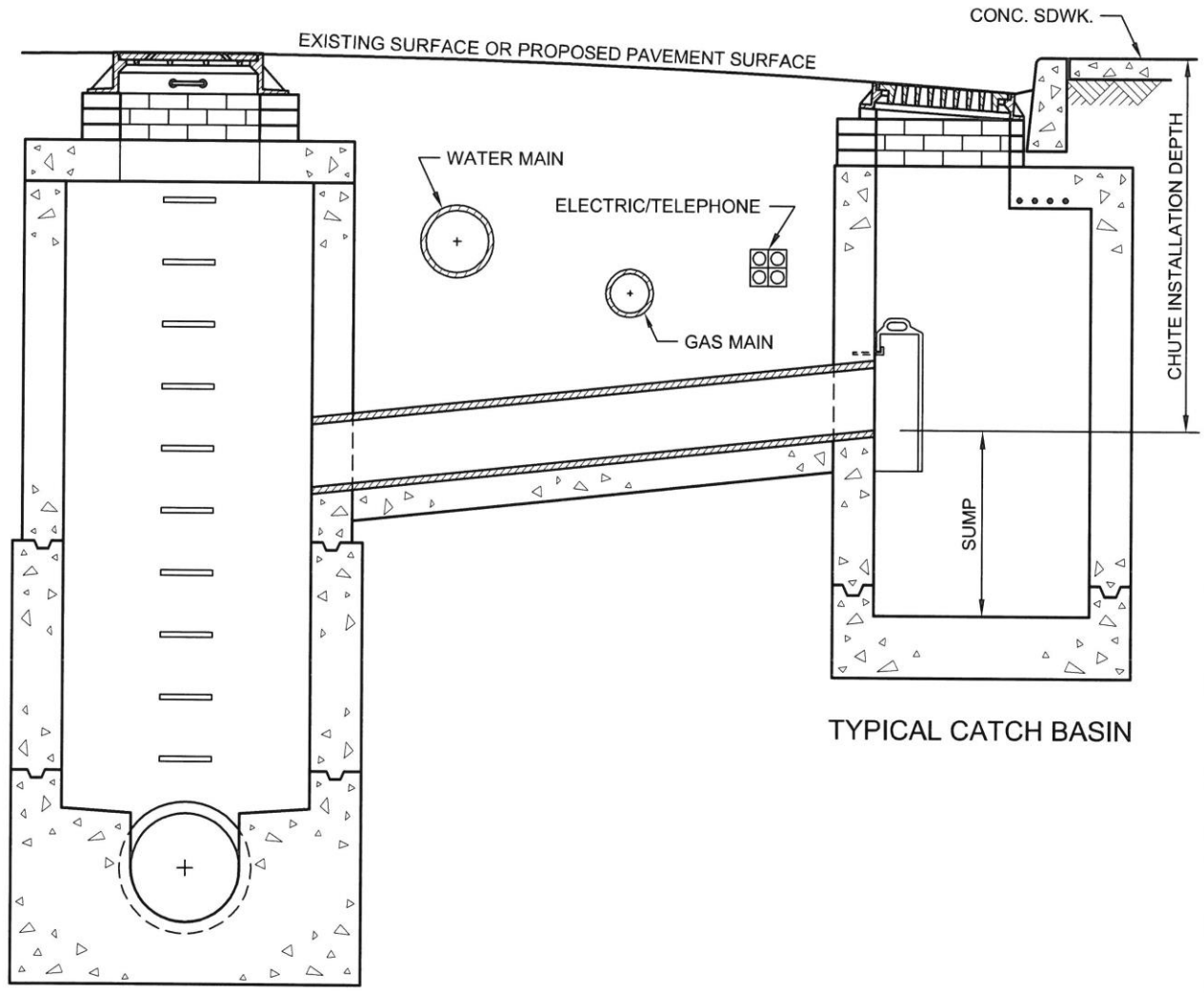

REVISED OCT. 2004 - L. ADRIEN
REVISED OCT. 1998 - J. WONG/W. PATALANO/P. MOY

GAS COST SHARING WORK (SKETCH NO. 4)

UTILITY CROSSINGS DURING CATCH BASIN CHUTE CONNECTION PIPE INSTALLATION (EXTRA DEPTH)

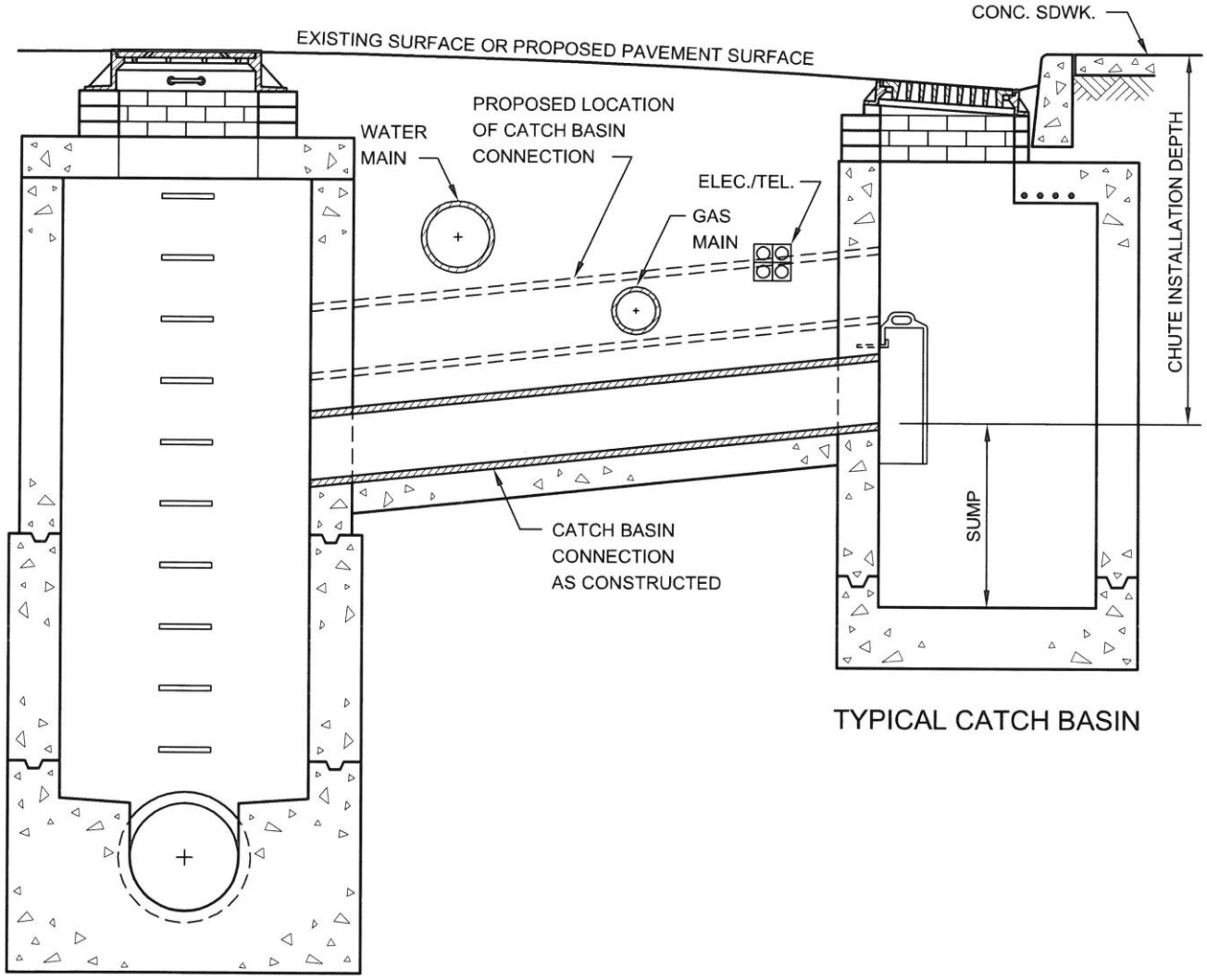

TYPICAL CATCH BASIN

TYPICAL SEWER MANHOLE

REVISED OCT. 2004 - L. ADRIEN
REVISED OCT. 1998 - J. WONG/W. PATALANO/P. MOY

GAS COST SHARING WORK (SKETCH NO. 5)

GAS MAIN ENCROACHMENT ON AND/OR PARALLEL TO EXCAVATION OF UNSHEETED TRENCH

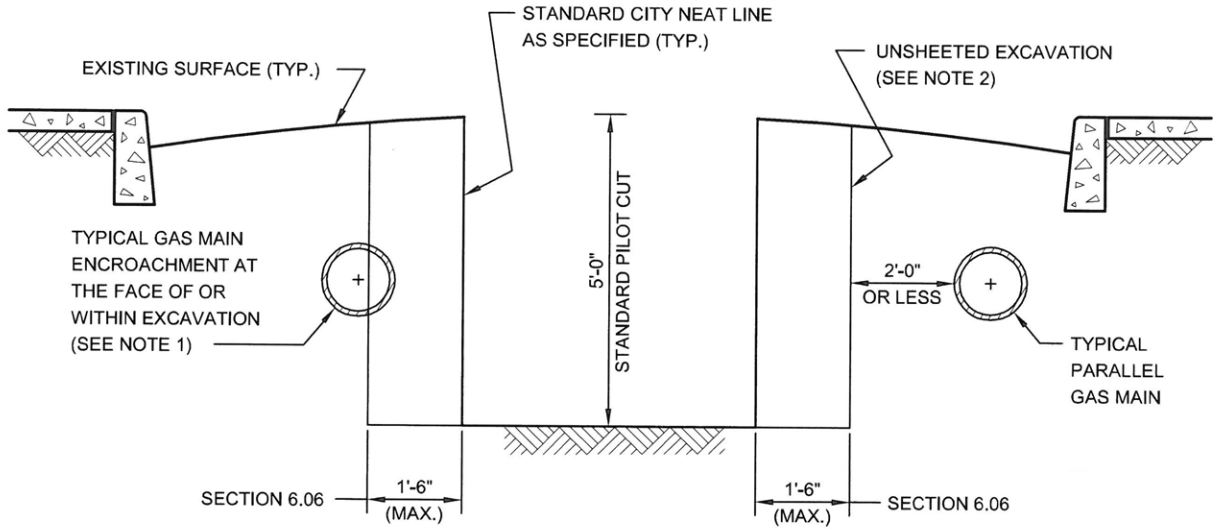

NOTES:

(1) GAS MAIN LOCATED AS SHOWN MAY HAVE TO BE REMOVED BY THE FACILITY OPERATOR PRIOR TO THE START OF CITY EXCAVATION, OTHERWISE, THE CONTRACTOR WILL BE PAID UNDER SECTION 6.06 FOR THE SAID WORK. IF GAS MAIN IS ABANDONED THEN SECTION 6.03 SHALL APPLY.

(2) EIGHTEEN (18) INCHES FROM STANDARD NEAT LINE IS THE MAXIMUM ALLOWABLE WIDTH OF AREA THAT MAY BE DISTURBED OR EXCAVATED DURING INSTALLATION OF CERTAIN TYPES OF SHEETING SYSTEMS THAT MEET THE REQUIREMENTS OF THE STANDARD SPECIFICATIONS OF THE DEPARTMENT OF DESIGN AND CONSTRUCTION OF THE CITY OF NEW YORK.

REVISED OCT. 2004 - L. ADRIEN
REVISED OCT. 1998 - J. WONG/W. PATALANO/P. MOY

V - PRELIMINARY GAS WORK TO BE PERFORMED BY FACILITY OPERATOR

APPLICABLE TO ALL GAS DRAWINGS:

- ALL RELOCATION WORK SHOWN IN THIS SECTION IS TO BE PERFORMED BY FACILITY OPERATOR.
- ALL SUPPORT AND PROTECTION WORK IS TO BE PERFORMED BY CITY CONTRACTOR.
- IF ADDITIONAL INFORMATION IS NEEDED REGARDING THE FACILITY OPERATOR RELOCATION WORK, THE CONTRACTOR IS ADVISED TO CONTACT THE GAS COMPANY REPRESENTATIVE:

MR. O' NEIL A WRIGHT
CON EDISON
4 IRVING PLACE, 12TH FL
NEW YORK, NY 10003
TEL.: 212-460-3870

(NO TEXT IN THIS AREA, TURN PAGE)

GAS FACILITY COST ALLOCATION AGREEMENT
PROJECT NO. SANDRESPC
CAPITAL GAS MAIN INSTALLATION

Sketch No.	ON STREET	FROM	TO	ITEM	SIZE	TYPE	LENGTH	REIMB LENGTH	REMARKS
1	Govourneur Slip East	Front Street	Water Street	80h	4	LP STL	180	180	M-22 and M-23
1, 2, 3, 4	Water Street	Govourneur Slip East	Jackson Street	82k	12	LP PE	900	900	M-22 and M-24
2	Water Street	Govourneur Slip East	FDR Drive	82f	3	LP PE	25	25	M-22 and M-23
4	Jackson Street	Front Street	Water Street	80j	8	LP STL	50	50	M-22 and M-23
5	Lewis Street	South Delancey Street	North Delancey Street	83h	6	HP PE	90	90	M-27
6	North Delancey Street	Lewis Street	Baruch Drive	82h	6	LP PE	260	260	M-28
7	East Houston Street	Columbia Street	Baruch Drive	81l	12	HP STL	220	220	M-31
8	East Houston Street	Columbia Street	Baruch Drive	82e	2	LP PE	60	60	M-31
9	Avenue C	Avenue C Loop	E. 20th Street	80i	6	LP STL	30	30	M-37
9	Avenue C	Avenue C Loop	E. 20th Street	80h	4	LP STL	250	250	M-37
10	E. 20th Street	E. 20th Street Loop	FDR Drive	82h	6	LP PE	60	60	M-38
10	E. 20th Street	E. 20th Street Loop	FDR Drive	80f	3	LP STL	150	150	M-38
11	E. 23rd Street	Asser Levy Place	FDR Drive	80i	6	LP STL	90	90	M-38
11	E. 23rd Street	Asser Levy Place	FDR Drive	80f	3	LP STL	12	12	M-38

PUBLIC IMPROVEMENT ENGINEERING - MANHATTAN/BRONX
RETIRE TABLE
PROJECT NO. SANDRESPC

SKETCH	SIZE (in)	KIND	LENGTH	DATE	ITEM	Location
1	4	L.P. ST(C').	50	1987	67.2a	M-22 and M-23
1	4	L.P. ST(C').	115	2014	67.2a	M-22 and M-23
1	12	C.I.	66	1903	67.2d	M-22 and M-23
1	12	ST.	27	1937	67.2d	M-22 and M-23
1	8	PE.	70	2014	67.2c	M-22 and M-23
1	2	PE.	25	2013	68.2b	M-22 and M-23
1, 2	6	C.I.P.	166	1884	67.2b	M-22 and M-23
2	1 1/4"	C.T.	26	1987	68.2b	M-22 and M-23
2	6	PE	8	2013	67.2b	M-22 and M-23
2, 3	8	L.P. PE.	220	2013	67.2c	M-22 and M-23
2	2	PE.	26	2013	68.2b	M-22 and M-23
3	2	PE.	26	2002	68.2b	M-22 and M-23
3	6	PE.	20	2013	67.2b	M-22 and M-23
3, 4	8	PE	60	2013	67.2c	M-22 and M-23
4	1 1/4"	PT.	26	2013	68.2b	M-22 and M-23
4	6	PE	22	2013	67.2b	M-22 and M-23
4	6	C.I.	77	1884	67.2b	M-22 and M-23
4	6	ST.	18	1940	67.2b	M-22 and M-23
4	6	PE	16	2002	67.2b	M-22 and M-23
4	6	ST. O.P.	28	1964	67.2b	M-22 and M-23
4	6	C.I.	13	1884	67.2b	M-22 and M-23
4	6	C.I.	39	1888	67.2b	M-22 and M-23
4	6	C.I.	46	1912	67.2b	M-22 and M-23
5	6	H.P. PE.	86	2011	67.2f	M-27
6	6	PE in 1906 SLV	110	2001	67.2b	M-28
6	4	ST(C').	18	1997	67.2a	M-28
6	4	PE.	13	1997	67.2a	M-28
6	4	PE.	105	2000	67.2a	M-28
7	12	H.P. ST.	140	1997	67.2h	M-31
8	2	PE	93	1996	68.2b	M-37
9	6	ST	65	1990	67.2b	M-37
9	4	ST	60	1994	67.2a	M-37
9	4	ST	102	1997	67.2a	M-37

PUBLIC IMPROVEMENT ENGINEERING - MANHATTAN/BRONX
RETIRE TABLE
PROJECT NO. SANDRESPC

SKETCH	SIZE (in)	KIND	LENGTH	DATE	ITEM	Location
10	6	PE	36	1989	67.2b	M-38
10	3	PE	94	1989	68.2b	M-38
10	6	PE	15	2004	67.2b	M-38
10	6	PE	40	1989	67.2b	M-38
11	6	ST	40	1948	67.2b	M-38
11	6	ST	40	1948	67.2b	M-38
11	3	ST	52	1974	68.2b	M-38

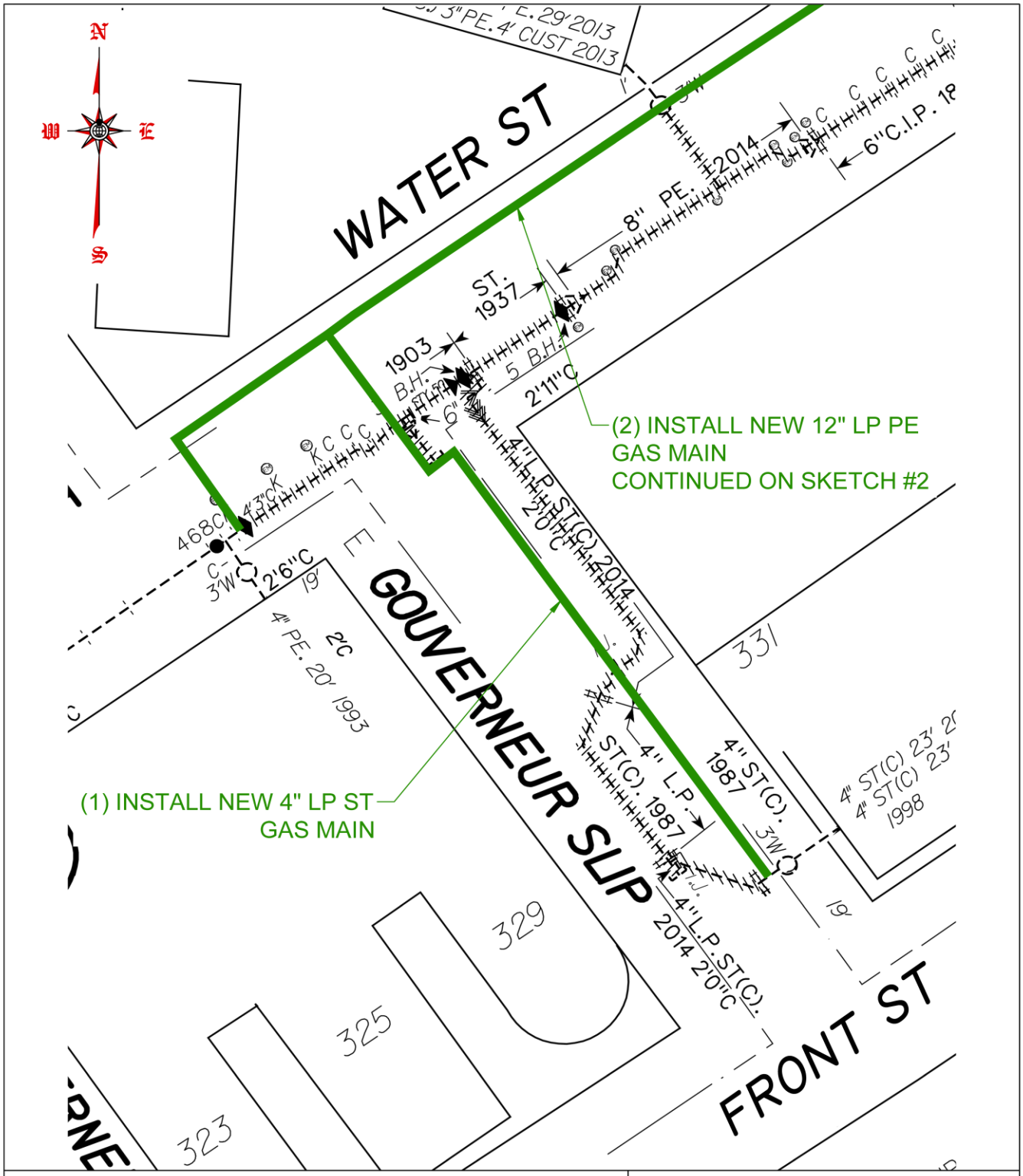

conEdison

CONSOLIDATED EDISON CO.
OF NEW YORK, INC.
4 IRVING PLACE
NEW YORK, NY 10003

SANDRESPC / EP-7
INSTALLATION OF EAST SIDE COASTAL RESILIENCY

BOROUGH OF MANHATTAN

JULY 2020	SCALE: N.T.S.	1 OF 11

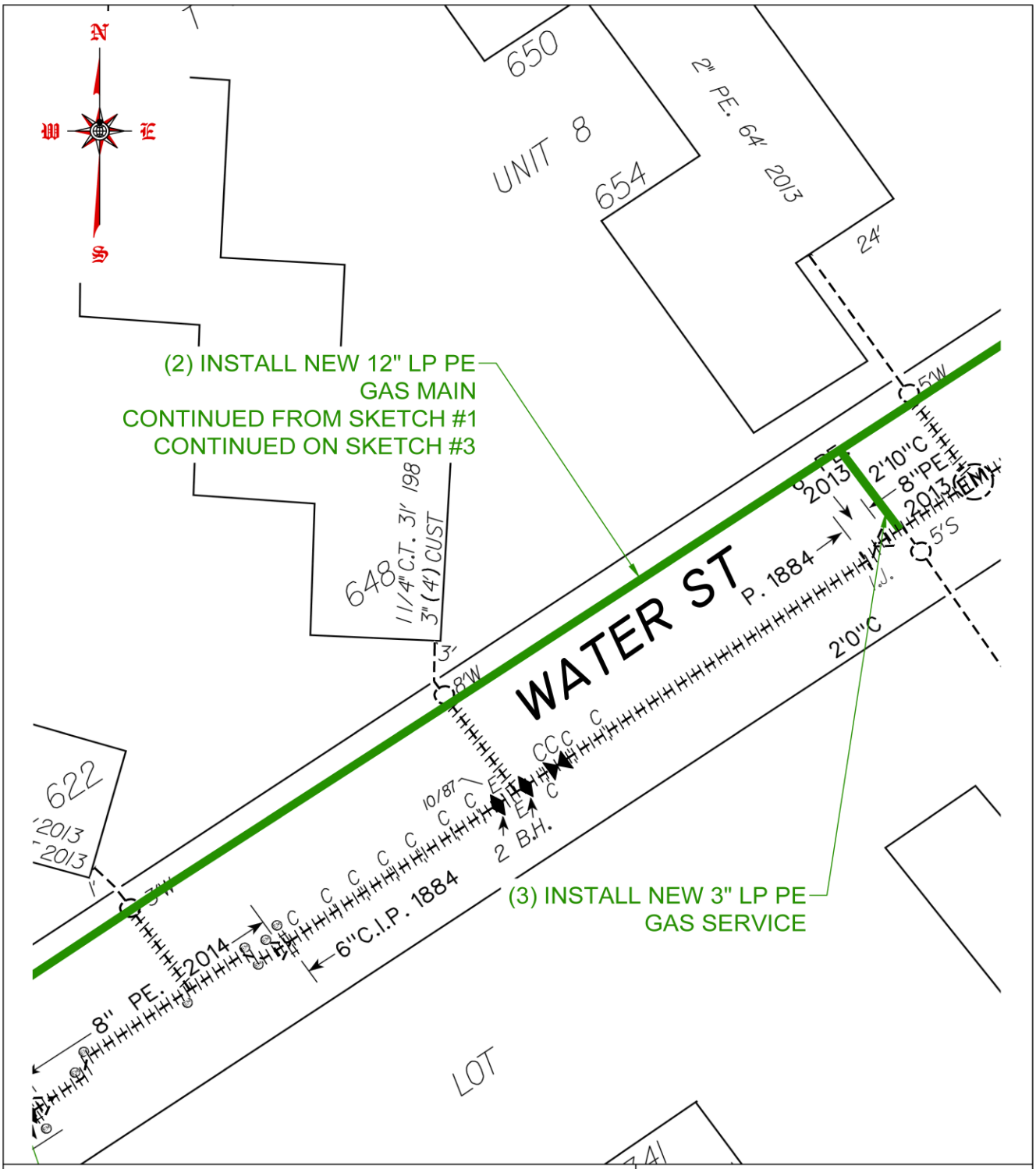

CONSOLIDATED EDISON CO.
OF NEW YORK, INC.
4 IRVING PLACE
NEW YORK, NY 10003

conEdison

SANDRESPC / EP-7
INSTALLATION OF EAST SIDE COASTAL RESILIENCY

BOROUGH OF MANHATTAN

JULY 2020	SCALE: N.T.S.	2 OF 11

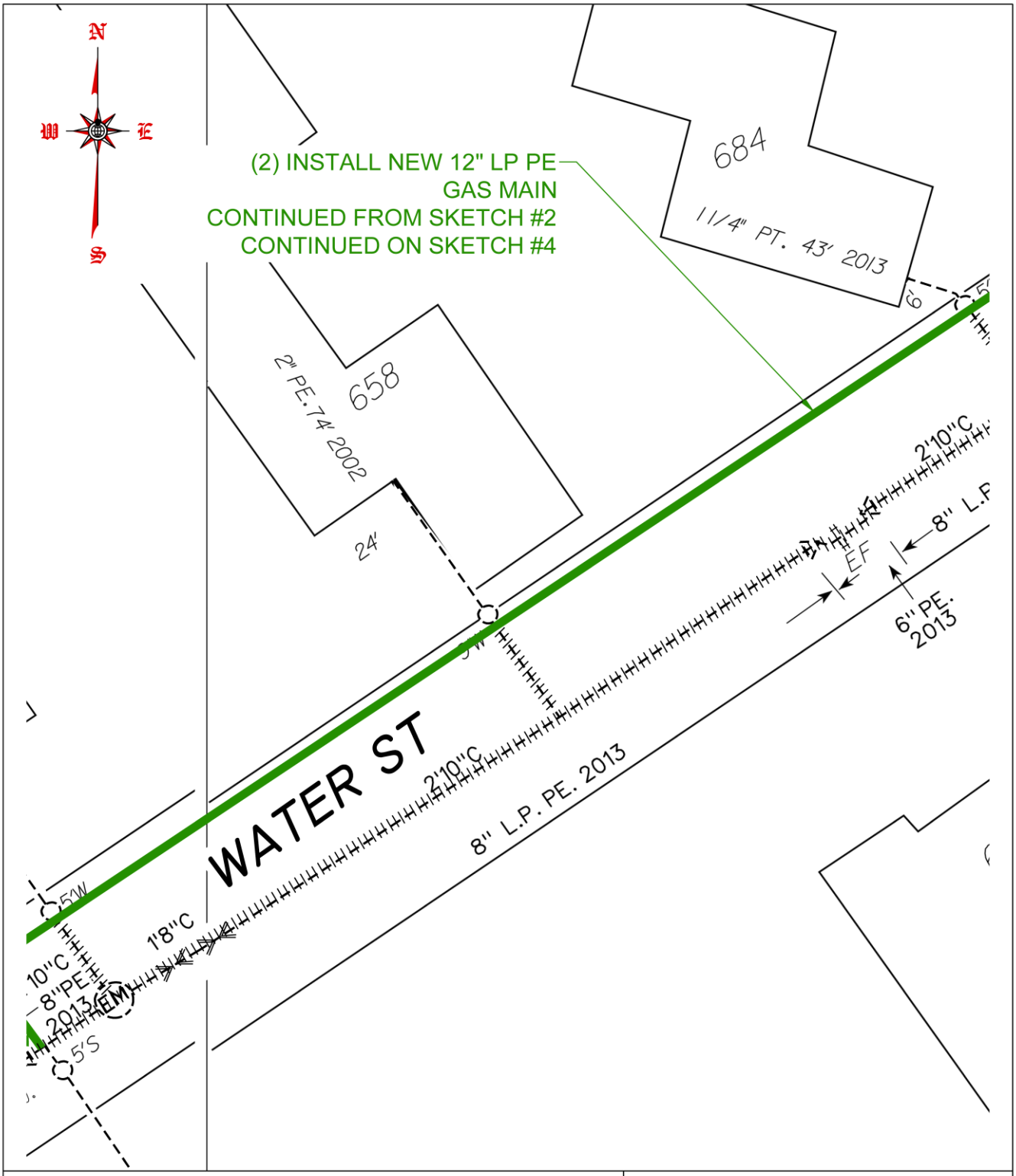

CONSOLIDATED EDISON CO.
OF NEW YORK, INC.
4 IRVING PLACE
NEW YORK, NY 10003

conEdison

SANDRESPC / EP-7
INSTALLATION OF EAST SIDE COASTAL RESILIENCY

BOROUGH OF MANHATTAN

JULY 2020	SCALE: N.T.S.	3 OF 11

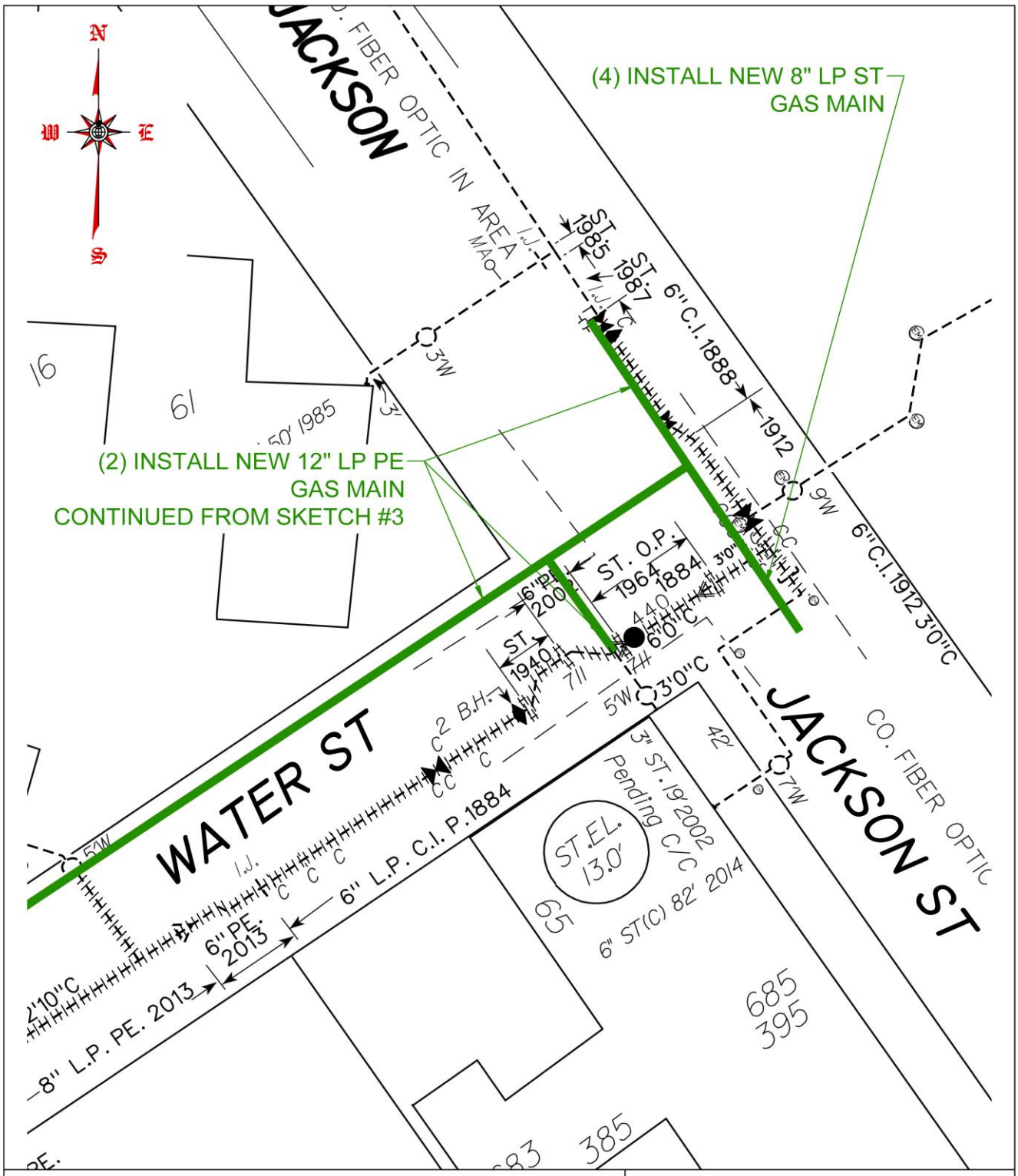

CONSOLIDATED EDISON CO.
OF NEW YORK, INC.
4 IRVING PLACE
NEW YORK, NY 10003

conEdison

SANDRESPC / EP-7
INSTALLATION OF EAST SIDE COASTAL RESILIENCY

BOROUGH OF MANHATTAN

JULY 2020	SCALE: N.T.S.	4 OF 11

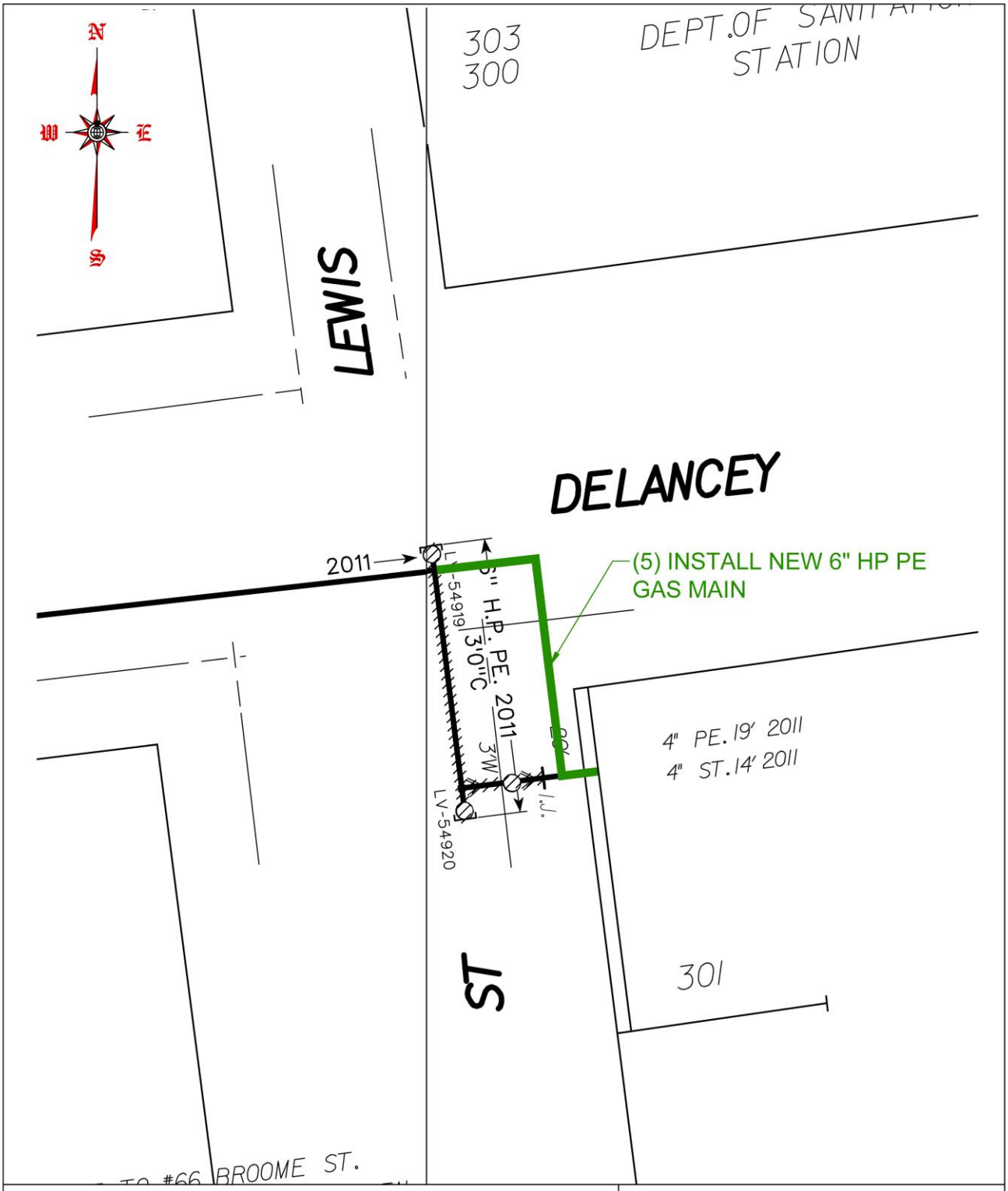

CONSOLIDATED EDISON CO.
OF NEW YORK, INC.
4 IRVING PLACE
NEW YORK, NY 10003

conEdison

SANDRESPC / EP-7
INSTALLATION OF EAST SIDE COASTAL RESILIENCY

BOROUGH OF MANHATTAN

JULY 2020	SCALE: N.T.S.	5 OF 11

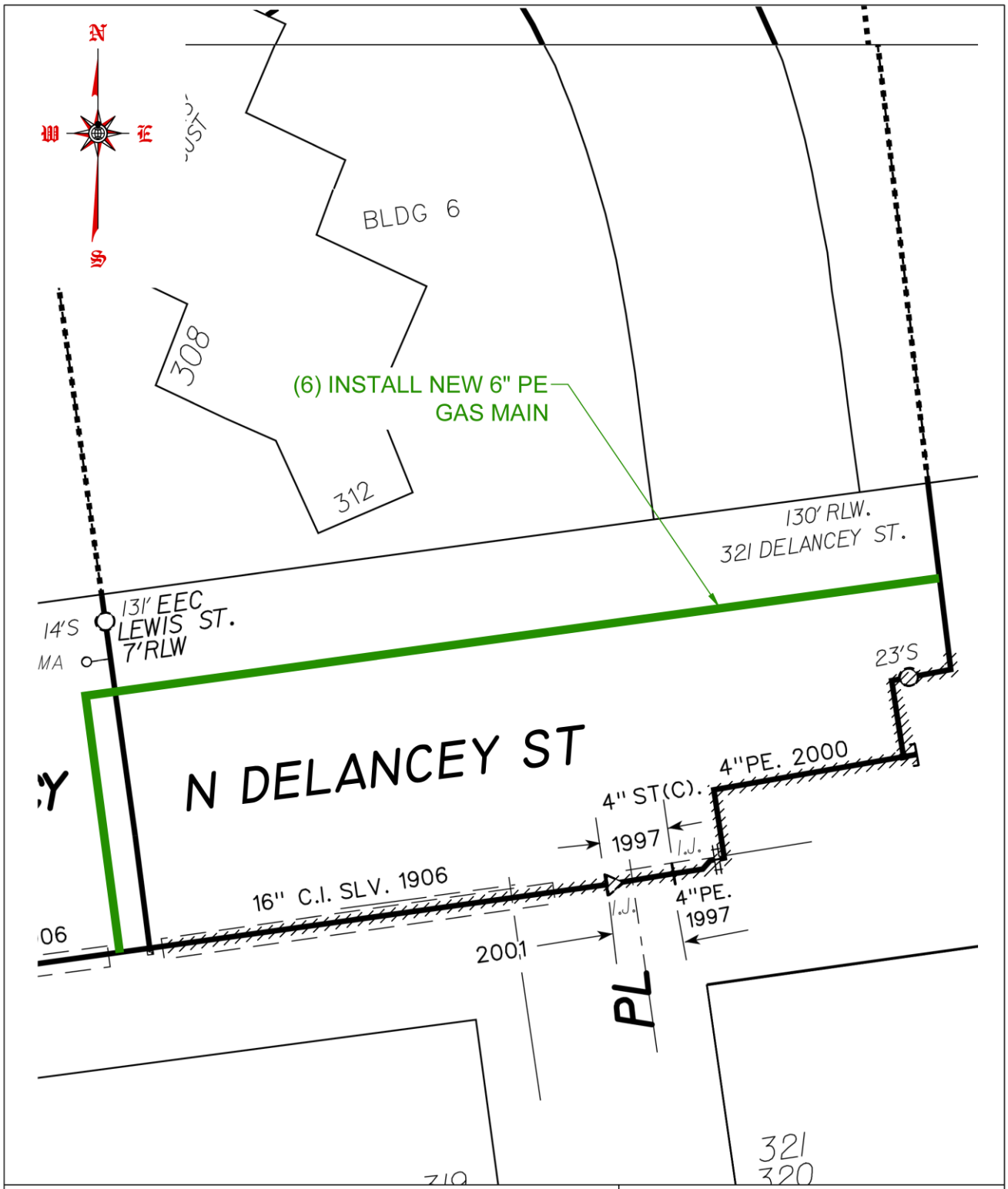

CONSOLIDATED EDISON CO.
OF NEW YORK, INC.
4 IRVING PLACE
NEW YORK, NY 10003

conEdison

SANDRESPC / EP-7
INSTALLATION OF EAST SIDE COASTAL RESILIENCY

BOROUGH OF MANHATTAN

JULY 2020	SCALE: N.T.S.	6 OF 11

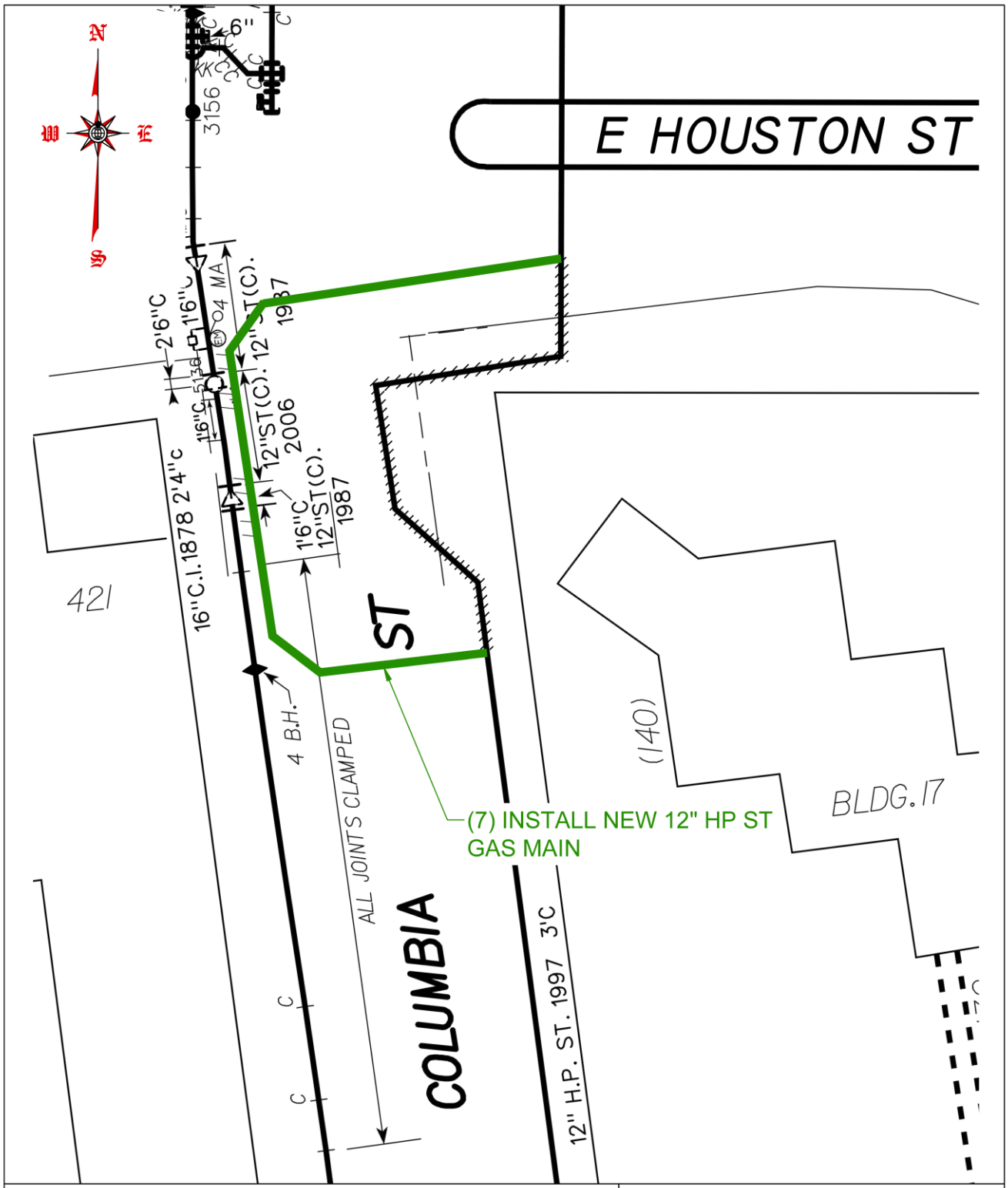

conEdison

CONSOLIDATED EDISON CO.
OF NEW YORK, INC.
4 IRVING PLACE
NEW YORK, NY 10003

SANDRESPC / EP-7
INSTALLATION OF EAST SIDE COASTAL RESILIENCY

BOROUGH OF MANHATTAN

JULY 2020	SCALE: N.T.S.	7 OF 11

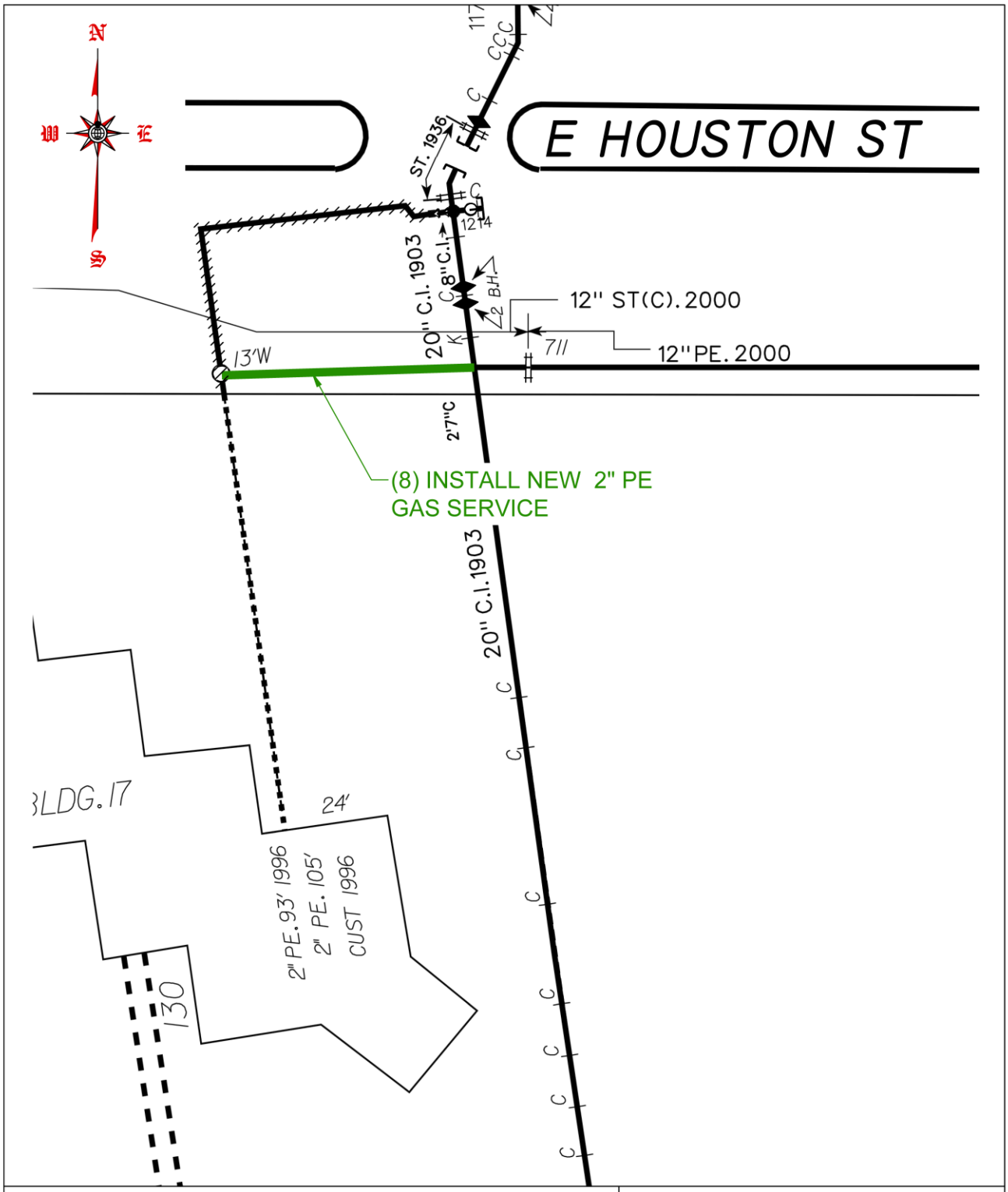

conEdison

CONSOLIDATED EDISON CO.
OF NEW YORK, INC.
4 IRVING PLACE
NEW YORK, NY 10003

SANDRESPC / EP-7
INSTALLATION OF EAST SIDE COASTAL RESILIENCY

BOROUGH OF MANHATTAN

JULY 2020	SCALE: N.T.S.	8 OF 11

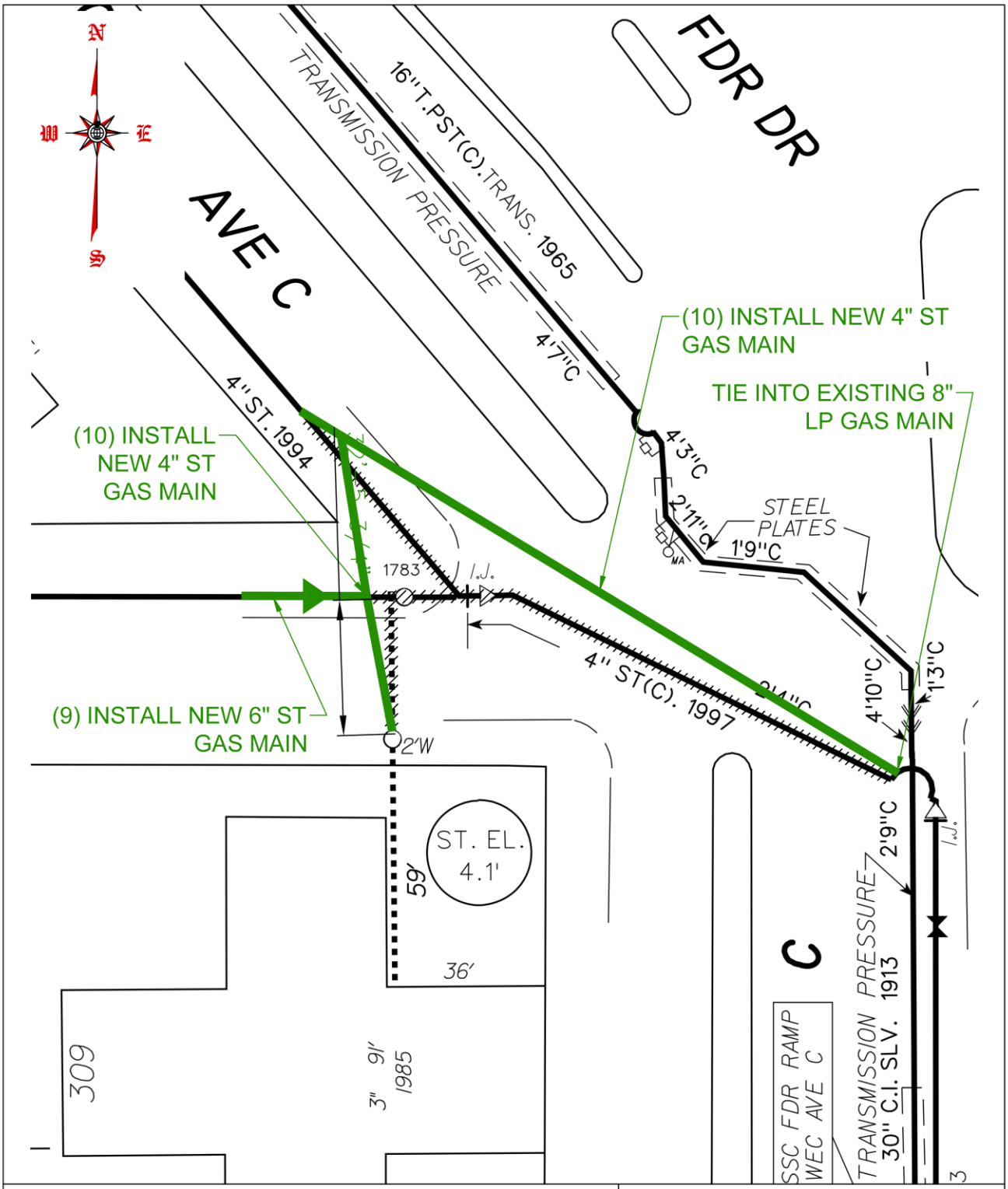

CONSOLIDATED EDISON CO.
OF NEW YORK, INC.
4 IRVING PLACE
NEW YORK, NY 10003

conEdison

SANDRESPC / EP-7
INSTALLATION OF EAST SIDE COASTAL RESILIENCY

BOROUGH OF MANHATTAN

JULY 2020	SCALE: N.T.S.	9 OF 11

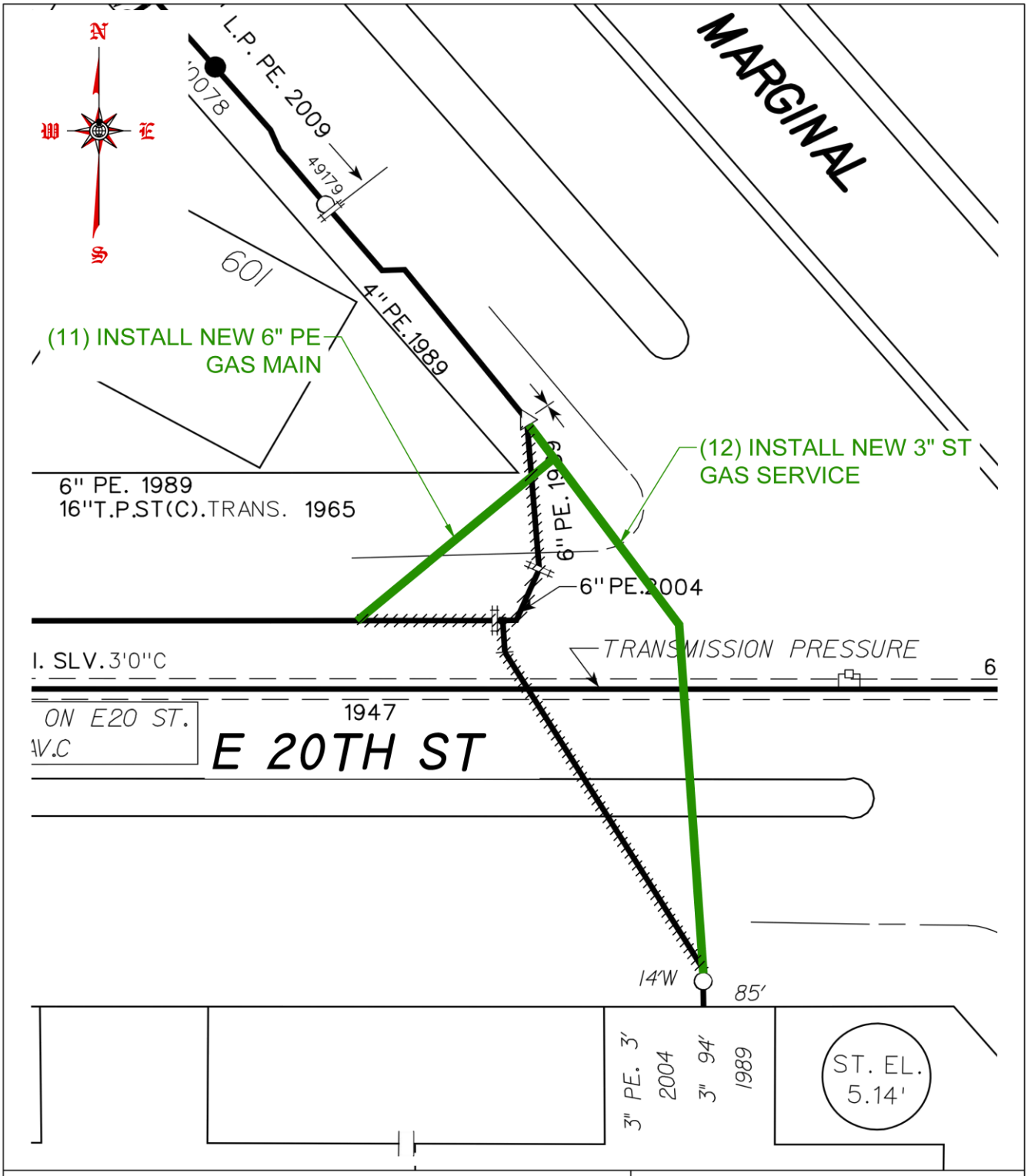

conEdison

CONSOLIDATED EDISON CO.
OF NEW YORK, INC.
4 IRVING PLACE
NEW YORK, NY 10003

SANDRESPC / EP-7
INSTALLATION OF EAST SIDE COASTAL RESILIENCY

BOROUGH OF MANHATTAN

JULY 2020	SCALE: N.T.S.	10 OF 11

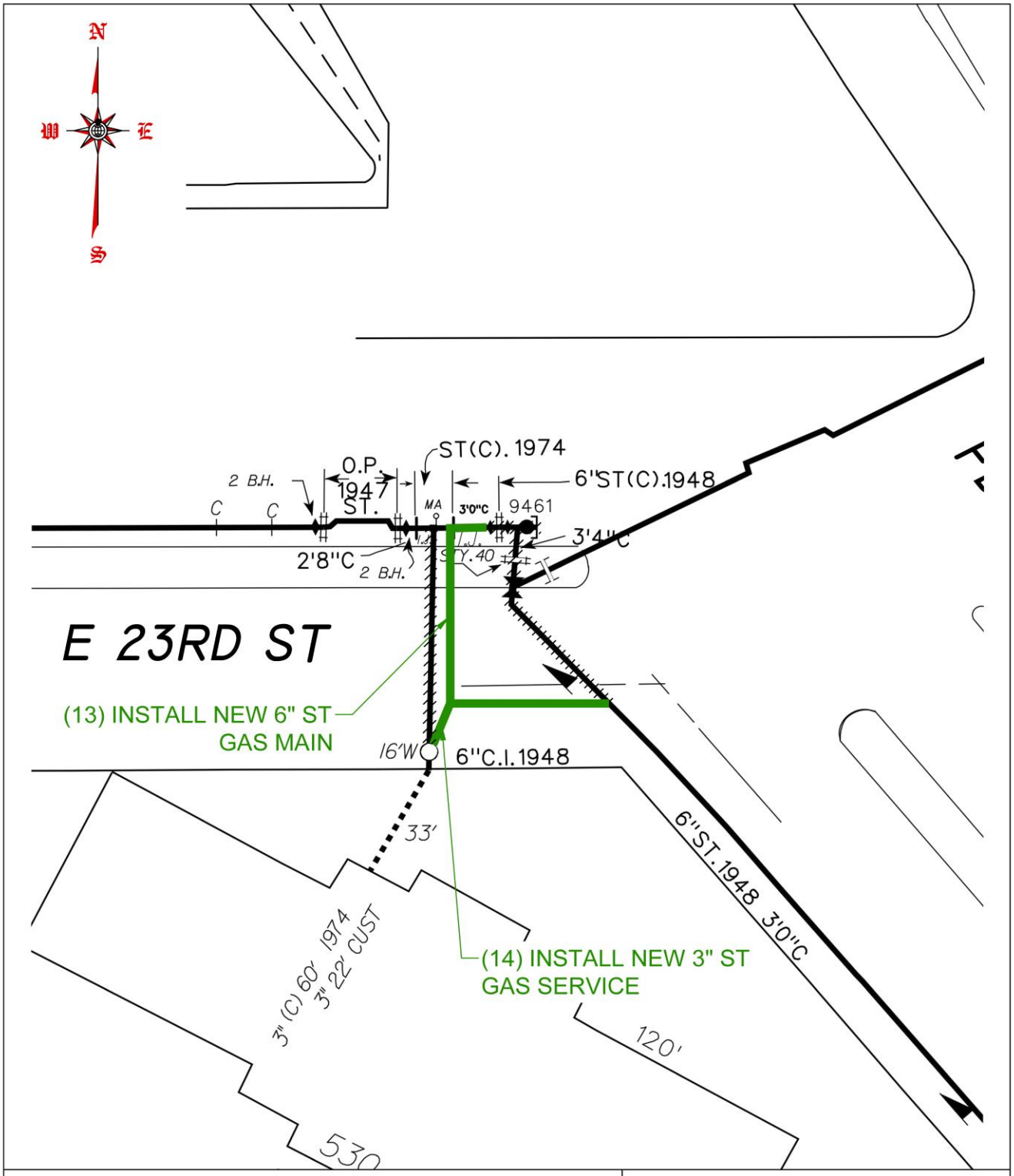

conEdison

CONSOLIDATED EDISON CO.
OF NEW YORK, INC.
4 IRVING PLACE
NEW YORK, NY 10003

SANDRESPC / EP-7
INSTALLATION OF EAST SIDE COASTAL RESILIENCY

BOROUGH OF MANHATTAN

JULY 2020	SCALE: N.T.S.	11 OF 11

VI - LISTING OF APPROXIMATE LOCATIONS OF EP-7 BID ITEMS QUANTITIES

(NO TEXT IN THIS AREA, TURN PAGE)

SCOPE OF WORK
SUPPORT AND PROTECTION
FOR CONTRACT NUMBER SANDRESPC

The City of New York Department of Design and Construction is planning to install sewers and/or water mains and all appurtenances in various locations in The City of New York along with all work incidental thereto.

6.01.1 (CE) - Gas Main Crossing Sewer Up To 24" Diameter (Ea.)

11 in Various Locations as Required

6.01.9 (CE) - Gas Main Crossing Watermain Up To 20" Diameter (Ea.)

8 in Various Locations as Required

6.02 (CE) - Extra Excavation for Catch Basin Chute Connection

4 in Various Locations as Required

6.03 (CE) - Removal of Abandoned Gas Facilities - All Sizes (L.F.)

2200 in Various Locations as Required

6.03.1a (CE) - Removal of Abandoned Gas Facilities with Possible Coal Tar Wrap. All Sizes (For Con Edison Work Only) (L.F.)

640 in Various Locations as Required

6.04 (CE) – Adjust Hardware to Grade Using Spacer Rings/ Adopters (Street Repaving) (Ea.)

20 in Various Locations as Required

SCOPE OF WORK
SUPPORT AND PROTECTION
FOR CONTRACT NUMBER SANDRESPC

The City of New York Department of Design and Construction is planning to install sewers and/or water mains and all appurtenances in various locations in The City of New York along with all work incidental thereto.

6.05 (CE) – Adjust Hardware to Grade by Resetting (Road Reconstruction) (Ea.)

20 in Various Locations as Required

6.06 (CE) - Special Care Excavation and Backfilling (C.Y.)

420 CY in Various Locations as Required, Including but Not Limited
To All Gas Services Crossing Unsheeted Water Mian Trenches

6.07 (CE) - Test Pits for Gas Facilities (C.Y.)

180 in Various Locations as Required

6.08A (CE) - Pier And / Or Plate Method of Protection for Ductile Iron Water Main with Less Than 24" cover (Ea.)

2 in a location as Required

6.09a (CE) – Trench Excavation/backfill for New Gas Mains & Services. Gas Installed By Others. (For Con Edison Work Only) (C.Y)

1891 in Various Locations as Required

SCOPE OF WORK
SUPPORT AND PROTECTION
FOR CONTRACT NUMBER SANDRESPC

The City of New York Department of Design and Construction is planning to install sewers and/or water mains and all appurtenances in various locations in The City of New York along with all work incidental thereto.

PROJECT NO. SANDRESPC 6.09 Trench Excavation/Backfill Computations (CY) Calculation						
Item*	Sketch Sheet	Gas Lines	Trench Dimension (ft.)			Volume (CY)
			L	W	D	
1	1	4" LP ST service in Gouverneur Slip East (M-22 & M-23)	180.00	3.00	4.50	90.00
2	1, 2, 3, 4	12" LP PE in Water Street (M-22 & M-23)	900.00	3.00	4.50	450.00
3	2	3" PE Service in Water Street (M-22 & M-23)	25.00	2.00	4.50	8.33
4	4	8" LP ST in Jackson Street (M-22 & M-23)	50.00	3.00	4.50	25.00
5	5	6" HP PE in Lewis Street (M-27)	90.00	3.00	4.50	45.00
6	6	6" PE in North Delancey Street (M-28)	260.00	3.00	4.50	130.00
7	7	12" HP ST in intersection of E. Houston and Columbia Street (M-31)	220.00	3.00	4.50	110.00
8	8	2" PE service in E. Houston St. (M-31)	60.00	2.00	4.50	20.00
9	9	6" LP ST in Avenue C (M-37)	30.00	3.00	4.50	15.00
10	9	4" LP ST in Avenue C (M-37)	250.00	3.00	4.50	125.00
11	10	6" LP PE in E. 20th Street (M-38)	60.00	3.00	4.50	30.00
12	10	3" ST Service in E. 20th Street (M-38)	150.00	2.00	4.50	50.00
13	11	6" LP ST in E. 23rd St (M-38)	90.00	3.00	4.50	45.00
14	11	3" LP ST in E. 23rd St (M-38)	12.00	2.00	4.50	4.00
			(A) GAS TRENCH VOLUME			1147.33
			(B) MAIN TIE-IN PITS (11 x 22.2 CY)			333.00
			(C) SERVICE TIE-IN PITS (11 x 5.6 CY)			95.20
			(A) + (B) + (C)			1575.53
			ADD 20% CONTINGENCIES			315.11
			TOTAL 6.09 ROUNDED OFF			1891

**See EP7 Sketches, item numbers included in parentheses on call-outs*

END OF EP-7 PAGES

THE EP-7 PAGES CONSIST OF FIFTY-TWO (52) PAGES, INCLUDING THIS PAGE AND ONE (7) SHEET OF PRIVATE UTILITY DRAWING ATTACHED TO THE CONTRACT PLANS.

NOTICE

THE PAGES CONTAINED IN THIS JOINT BID (JB-PAGES) REPRESENT ADDITIONAL CONTRACT REQUIREMENTS APPLYING TO WORK PERFORMED IN THE PRESENCE OF PRIVATELY OWNED UTILITY FACILITITIES.

(NO TEXT ON THIS PAGE)

JOINT BID

DATED: February 05, 2021

---

1. The Contractor shall be responsible for compliance with all the provisions of the following Articles, Appendixes, Specifications, Sketches and Scope of Work, which are hereby made a part of the original contract documents:

The "JOINT BID WITH PRIVATE UTILITY COMPANIES SPECIAL PROVISIONS" (Pages JB-1 through JB-4) ; Appendix "C"- Resolutions of certain Disputes Arising Between the contractor and the Utilities (Pages JB-5 through JB-10); Specialty Provisions for SANDRESPC Page (JB-11); Construction Guideline Document for PI Contractor Page (JB-12 through JB-26); CE-SI-1080 Rev. 01 Page (JB-27 through JB-39): and the following Con Edison & ECS specialty work items (contained on Pages JB-40 through JB-128):

JB 122 – Incremental Cost for MPG Contaminant Excavation, Transportation, Handling & disposal.
JB 302 – Field Coating for oil-o-static feeder Pipes
JB 400A – Surveyed and Drafted Test Pits for Utility Facilities.
JB 401 – Trench Excavation for Adjustment of utility Facilities.
JB 402B – Horizontal and Vertical Adjustment of Electric Transmissions Facilities to final Position.
JB 402T – Horizontal and Vertical Adjustment of Telecommunications Facilities.
JB 403T – Furnish and Install Steel Protection Plates for Telecommunication Facilities.
JB 404 – Pier and/ or Plate Method of Protection for Ductile Iron Water main with less than 24" Cover.
JB 405 – Excavation for Installation of Utility Facilities.
JB450 – Construction field Support.
JB 603T – Furnish and Install Telecommunications conduits.
JB 610 - Installation of Steel Gas Pipe.
JB 611 - Installation of Steel Gas Pipe Fitting.
JB 615 – Installation of Plastic Gas Pipe.
JB 616 - Installation of Plastic Gas Pipe Fitting.
JB 620 - Installation of Steam Pipe.
JB 621 - Installation of Steam Pipe Fittings.
JB 625 - Installation of steam equipment.
JB 636E – Adjustment of Utility Hardware.
JB 636M - Modification of work Methods to Accommodate Utility Hardware during Pavement Milling and Resurfacing Operations.
JB 636RM – Rebuilding and Modifications to Utility Structures.
JB 638NT – Field Constructed Telecommunications manhole Structures.
JB 638R – Break out and Remove Utility Structure Containing Active Facilities.
JB 798 – Modification of non-Concrete Yoke Trolley Structures Removal when Crossing Utility Facilities.
JB 799 – Modification of non-Concrete Trolley Structures Removal Parallel to Utility Facilities.

JB 800 - Modification of Concrete Yoke Trolley Structures Removal when Crossing Utility Facilities.

JB 801 - Modification of Concrete Yoke Trolley Structures Removal Parallel to Utility Facilities.
JB 803 – Line Cut by Pneumatic Tools in lieu of Saw Cut Associated with Roadway Removal Operations.
JB 850 – Installation of Rubber sheets for Utility Facilities.
JB 900 – Extra utility Work Cost Allowance.
JB 1006V – 1020V – Vertical or Rolled Watermain Offset.

B. Joint Bidding Private Utility Work reference document "JOINT-BIDDING SPECIFICATIONS AND SKETCHES FOR MANHATTAN", Issued August 1, 2005, is available online at: http://www1.nyc.gov/site/ddc/resources/publications.page or for pick up by calling (718) 391-2085 between 8:30 A.M. and 4:00 P.M. at 30-30 Thomson Avenue, First Floor Bid Procurement Room, L.I.C., N.Y. 11101.

C. Private Utilities Participating List Page (JB-129);

D. Private Utilities Scope of Work Pages (JB-130 through JB-182), Con Edison pages (JB-131 through JB-171) and ECS pages (JB-172 through JB-182); Test Pits Pages (JB-183 Through JB-188);

E. Private Utility drawings (61 Sheets) consisting of:

- Drawing JB1 to JB 2, General Notes & Conditions (All Utilities) (2 Sheets).
- Drawing JB3 to JB22, Conduit & Duct Occupancy plates (CONED) (20 Sheets).
- Drawing JB23 to JB35, Gas Plates. (CONED) (13 Sheets).
- Drawing JB36 to JB43, Steam & Service Plates. (CONED) (8 Sheets).
- Drawing JB44 to JB47 Mass Excavation. (CONED) (4 Sheets).
- Drawing JB48 to JB52 Electric Capital Plan. (CONED) (5 Sheet).
- Drawing JB53 to JB54 Steam Capital Plan. (CONED) (2 Sheets).
- Drawing JB55 to JB61, Existing Conduit Plate (ECS) (7 Sheets).

2. Refer to the Private Utility reference document called "JOINT-BIDDING SPECIFICATIONS AND SKETCHES FOR MANHATTAN", Specification for JB 450, pages 56, 57, and 58;

   Note: Items under JB 450 are task driven operation items and are not based on crew size. These items are divided into three unique types, each of which provides a description of applicability and typical use. The "Method of Measurement", on page 57, states that "The actual crew performing the operation will not be considered by the facility operator, in consultation with the Resident Engineer, when determining the applicable Unit Item Type, which shall be only as per the task performed."

3. Refer to the Private Utility reference document called "JOINT-BIDDING SPECIFICATIONS AND SKETCHES FOR MANHATTAN", Specification for JB 225, page 10, Article A. Description;
   Delete the last four lines of text in their entirety, beginning with the words: "accordance with Specification under Addendum #1, . . .";
   Substitute the following revised text: "accordance with Specification Section 7.18 – Controlled Low Strength Material (CLSM), in the NYC DOT Standard Highway Specifications. All backfill within the maximum excavation limits shown in Sketch No. JB 225 shall be of

controlled low strength material (CLSM) in compliance with requirements of Section 7.18, and its cost shall be deemed included in this item."

4. Refer to the Private Utility reference document called "JOINT-BIDDING SPECIFICATIONS AND SKETCHES FOR MANHATTAN", Specification for JB 225, page 10, Article B. Materials;
   Delete the first sentence in its entirety, beginning with the words: "Furnish Controlled Low Strength Material fill or backfill . . .";
   Substitute the following revised sentence: "Furnish Controlled Low Strength Material fill or backfill as required and specified in Section 7.18 – Controlled Low Strength Material (CLSM), of the NYC DOT Standard Highway Specifications."

5. Refer to the Private Utility reference document called "JOINT-BIDDING SPECIFICATIONS AND SKETCHES FOR MANHATTAN", Specification for JB 226, page 12, Article A. Description;
   Delete the last five lines of text in their entirety, beginning with the words: "accordance with Specification under Addendum #1, . . .";
   Substitute the following revised text: "accordance with Specification Section 7.18 – Controlled Low Strength Material (CLSM), in the NYC DOT Standard Highway Specifications. All backfill within the maximum excavation limits shown in Sketch No. JB 225 shall be of controlled low strength material (CLSM) backfill in compliance with Section 7.18 in the NYC DOT Standard Highway Specifications, and its cost shall be deemed included in this item."

6. Refer to the Private Utility reference document called "JOINT-BIDDING SPECIFICATIONS AND SKETCHES FOR MANHATTAN", Specification for JB 226, page 12, Article B. Materials;
   Delete the first sentence in its entirety, beginning with the words: "Furnish controlled low strength material fill or backfill . . .";
   Substitute the following revised sentence: "Furnish controlled low strength material fill or backfill as required and specified in Section 7.18 – Controlled Low Strength Material (CLSM), of the NYC DOT Standard Highway Specifications."

7. If the Contractor claims or alleges that delays were caused by a utility for failure to supply and/or provide Specialty Contractors in a timely manner, then the Contractor may bring a claim against the Utility. Neither the Contractor nor the Utility shall bring a delay claim against the City either in a Court of Law or the City's contract dispute resolution board process; and to the extent the Contractor alleges a delay was caused by a Utility, the Contractor will be limited to bringing such legal action in a Court of Law and will not be able to seek arbitration over any delay claims or delay-related claims. If the Contractor and Utility initiate a legal action against each other, this legal action will be outside the jurisdiction of the City's contract dispute resolution board process and the City shall not be a party in the litigation process.

8. No unit price item overrun, in excess of the bid schedule quantity, will be permitted for Joint Bid funded bid items included in this Contract, except when the City's RE determines that such overruns are caused by field conditions impacting planned City work, approved construction methods, or scope of work changes. Overruns not paid by City will be negotiated and paid to Contractor by the Utility.

Notices to Bidders

The City is bidding jointly Project ID: SANDRESPC. The City has combined its Public Work, Interference Work, and Utility Work into one bid contract package. All prospective bidders should be alerted to the fact that the City prepared all specifications, drawings, and all other necessary contract documents for the Public Work, Interference Work, and Utility Work.

The City has prepared contract documents which include specifications, drawings and all other necessary contract documents for the Public Work, Interference Work, and Utility Work. The bid items, specifications, and estimated quantities have been designed to fully compensate the Contractor for its costs to perform the Public Work, Interference Work, and Utility Work.

The Contractor agrees that its bid items and prices for the Public Work, Interference Work, and Utility Work shall include all incremental costs and/ or additional compensation for performing Public Work including: coordination of its work with the Utilities, loss of productivity and efficiency, idle time, delays (including any delays occasioned by negotiation of a contract change), change in operations, mobilization, remobilization, demobilization, added cost or expense, loss of profit, other damages or impact costs that may be suffered by the Contractor because of direct or indirect obstructions due to the presence of Utility Facilities, such as conduits, ducts or duct banks containing conductors for live and/or abandoned electric, telephone, cable TV, any type of communication cables, "Non Cost Sharing" gas mains and services, steam mains, and various non-hazardous encasement materials or utility structures located within the Public Work project area.

In the bid solicitation documents, the City has provided estimates of quantities for both Specific Public Work, Specific Utility Work Items, and Specific Shared Items. Bidders are required to bid a unit price on all Work. For the purposes of identifying the lowest responsive and responsible bidder, a bidder's unit prices bid must be calculated based on all Work, which includes the combined Specific Public Work Items, the Specific Utility Work Items, and the Specific Shared Items.

The City and the Utilities may use any applicable item from the Bid Schedule regardless of whether the item is considered or defined as a City item or Utility item.

[NO FURTHER TEXT HERE.]

Appendix "C"

Resolution of Certain Disputes Arising Between the Contractor and the Utilities

C.1.0 Applicability. In recognition of the usefulness of a process of alternative dispute resolution for its efficiency, speed and cost-effectiveness in managing conflict and settling disputes that may arise under, or by virtue of, these special provisions of Joint Bidding, the City and Utilities have agreed to the procedures set forth in this **Appendix "C."** Accordingly, this **Appendix "C"** shall apply to disputes between the Contractor and the Utilities that arise under, or by virtue of, the provisions of this contract, which are set forth in pertinent part, below:

C.1.1 The Utilities' Responsibilities. If the Utility identifies an issue in the payment requisition for the Utility Work only, the Utility will immediately notify the City and the Contractor by a written notice. After sending such written notice, the Utility agrees to meet with the Contractor to resolve the issue. If the issue cannot be resolved, then the Utility or the Contractor shall seek to resolve the issue through the arbitration process as set forth herein.

C.1.2 If The Utility Determines That There Is No Extra Or Disputed Work. If the Utility determines that the alleged extra Utility Work or the disputed Utility Work is part of the City's contract documents and denies the Contractor's claim or request for a change order, then after receiving the Utility's written response, the Contractor shall either accept the Utility's determination or immediately seek to have the issue resolved through the arbitration process as set forth herein.

C.1.3 If The Utility Determines That There Is Extra Work. If the Utility determines that there is extra Utility Work, the extra Utility Work will be paid for based on the Unit Price Book and the Contractor's Multiplier. If all or a portion of the agreed upon extra Utility Work items are not in the Unit Price Book, then the Utility and the Contractor shall negotiate the cost of supporting and protecting and/or alleviating the impact on the Public Work caused by the extra or disputed Utility Work with each other with the understanding that the performance of Public Work shall continue during all negotiations and discussions. If the parties reach an agreement on cost for the extra or disputed Utility Work, then the Contractor and the Utility shall submit to the City's RE a copy of the agreed upon prices together with supporting documentation. If the parties do not reach an agreement on cost for the extra or disputed Utility Work, then the parties will immediately arbitrate the issue as set forth herein.

C.2.0 Joint Bid Projects. Disputes that arise under this Appendix, as described above in paragraph A.1.0, shall be resolved in accordance with the provisions of this **Appendix "C"**. **Appendix "C"** shall NOT apply to any disputes between the City and the Contractor, or any disputes between the City and the Utilities. Since the arbitration of Utility interference disputes, as described in Article A.1.0 above, is a matter solely between the Utilities and the Contractor, and since the parties agree to reduce or eliminate any costs to the City relating to any arbitration pursuant to this **Appendix "C"**, the parties hereby agree that:

C.2.1 The City shall not be a party in the arbitration process;

C.2.2 Neither the Contractor nor the Utilities shall call as a witness in the arbitration process any City employee, agent or consultant, including the City's RE, his staff or City inspection personnel;

C.2.3 The City shall not be responsible for any costs, fees or monetary awards or price adjustments associated in any way with the arbitration process described in this **Appendix "C"**; and

C.2.4 Notwithstanding Articles A.2.1 and A.2.2, the City's obligation to furnish information to the parties shall be limited to those requests as set forth under the New York State Freedom of Information Law, as amended.

C.3.0 Pre-Arbitration Procedures.

C.3.1 Should a dispute arise between any Utility and the Contractor pursuant to Article A.1.0 of this Appendix, the disputing party shall notify the City and the other party in writing within two (2) Business Days of the dispute that a dispute exists, and briefly describe; (i) the nature of the dispute; and (ii) the proposed resolution and rationale supporting its proposal.

C.3.2 After notifying the City of the dispute, the disputing parties shall have fifteen (15) Business Days to meet, discuss the issues, exchange documents and/or exchange offers with due diligence and in good faith in order to reach an agreement and resolve the dispute.

C.3.3. If the disputing parties reach an agreement, they shall immediately notify the City in writing that the dispute has been resolved and describe the terms of the resolution.

C.3.4 If the disputing parties have not reached an agreement within fifteen (15) Business Days of the date the City was first notified of the dispute, the Contractor shall, within five (5) Business Days thereafter, submit to the Utility a written Final Offer, which shall consist of: (i) a description (e.g., units and quantities) of all reasonable and necessary disputed work or extra work which the Contractor contends are not covered by application of the Unit Price Book and the Multiplier; and (ii) a detailed breakdown of the Contractor's proposed prices (e.g., unit prices and quantities) for such work.

C.3.5 Upon receipt of the Contractor's Final Offer, the Utility shall, within five (5) Business Days, either accept the Contractor's Final Offer or submit to the Contractor a written Final Offer which shall consist of: (i) a description (e.g., units and quantities) of all reasonable and necessary disputed work or extra work, if any; and (ii) a detailed breakdown of the Utility's proposed prices (e.g., unit prices and quantities) for such work, if applicable.

C.3.6 Once Final Offers have been exchanged by the parties, they may not be modified or withdrawn by either party except by mutual agreement or final settlement of the dispute.

C.3.7 Upon exchange of Final Offers, the Contractor shall have three (3) Business Days, to either accept the Utility's Final Offer or submit the dispute to the American Arbitration Association ("AAA") to be resolved in accordance with the Construction Industry Arbitration Rules ("Rules") in effect on the date the arbitration is initiated, except as such Rules are modified herein.

C.3.8 Each of the steps described above shall be a condition precedent to the obligations of the parties in succeeding steps. Since **Time is of the Essence**, should either party fail to comply with any of the pre-arbitration procedures described above, that party shall be deemed to be in default. If, upon receipt of written notice of default by the other party, the defaulting party has not cured the default within three (3) Business Days, the other party may proceed to arbitration solely on the issue of whether the defaulting party was in default of these pre-arbitration procedures. If, after hearing evidence, the arbitrator(s) determine that the defaulting party was in default of these pre-arbitration procedures, then the arbitrator(s) shall enter a final decision in favor of the other party in accordance with the Final Offer submitted by the other party or, if no Final Offer has been submitted prior to the default, according to the last written proposal submitted by the other party.

C.4.0 General Provisions.

C.4.1 The Utility agrees to pay for any disputed or extra Utility Work while the arbitration proceeding is pending based on the Utility's Final Offer.

C.4.2 All determinations by the parties required by this **Appendix "C"** shall be clearly stated, with a reasoned explanation for the determination based on the information and evidence presented to the party making the determination.

C.4.3 The Utility agrees to copy the City on all communications involving the arbitration process and to notify the City of the final determination.

C.4.4 The Utility agrees to pay the Contractor directly for any final settlement for extra Utility Work that may be agreed to by the Utilities and the Contractor or any final award for extra Utility Work issued by the arbitrator(s), less credits for any payments previously made by the Utility to the Contractor.

C.4.5 All of the contract defined terms shall apply here, as if they were re-stated herein.

C.4.6 Since **Time Is Of The Essence** on all Joint Bid Projects, whenever there is a dispute pursuant to this **Appendix "C"**, the terms of the City's Construction Contract shall remain in full force and effect, and the Contractor shall continue performing all of the City Work and the Utility Work as directed by the City.

C.4.7 The timeframes set forth herein have been established to ensure that the Joint Bid Project does not stop for any disputes between the Contractor and the Utility.

C.4.8 All of the timeframes are measured in Business Days, which include Monday, Tuesday, Wednesday, Thursday and Friday, but exclude holidays.

C.4.9 For all disputes that arise under **Appendix "C"**, the City's role shall be limited to receiving copies of all written communications.

C.4.10 The Contractor and all subcontractors hired by it agree to waive any rights they may have, if any, under law, equity, contract or otherwise to compel the City to assert any right the City may have, including the issuance of any directives or so-called "order outs" under the New York City Administrative Code, to require any or all of the Utilities to maintain, repair, replace, protect, support, shift, alter, relocate, and/or remove Utility facilities in connection with work to be performed under this contract. However, nothing in this Agreement shall preclude the City from exercising its rights under the law, including the right to issue such a directive to a Utility.

C.4.11 Each Utility shall be named as an additional insured on all insurance policies required to be maintained by the Contractor in connection with the Joint Bid Project. The actual incremental cost, if any, to the Contractor of providing such insurance coverage shall be borne by the Contractor. The Contractor shall provide a written statement from its insurance provider documenting the this added coverage to the Utility. Under no circumstances shall the cost of insurance coverage on behalf of the Utility be borne by the City. Nothing in this paragraph shall be interpreted to imply the City's acceptance of any additional responsibility or liability for any matter related to the performance of Utility Work. In particular, with regard to any Utility Work performed in accordance with or through this **Appendix "c"**, the Utility and the Contractor bear joint and full responsibility to ensure that any Utility Work performed by the Contractor is in compliance with all applicable government and Utility regulations.

C.5.0 <u>The Arbitration Procedures</u>.

C.5.1 Once the AAA has appointed an arbitrator(s), the arbitration shall be scheduled as promptly as possible given the arbitrator(s) and the parties' schedules.

C.5.2 No later than fourteen (14) calendar days prior to the first day of arbitration, the Utility and Contractor shall submit to the arbitrator(s), and to each other, a summary of each party's respective position, all documentary, photographic or physical evidence on which the party intends to rely, and such other information as is deemed appropriate, along with a copy of each party's "Final Offer" as described above.

C.5.3 The arbitration shall be conducted and concluded in two (2) days.

C.5.4 On the morning of the first (1st) day of the arbitration, Contractor and/or representatives shall have 3½ hours to make a presentation of its claim to the arbitrator(s). During its presentation, Contractor shall not be permitted to produce any evidence that has not already been provided to the Utility and the arbitrator(s) pursuant to Paragraph A.5.2, above. Contractor shall be permitted to produce any analysis or description of its claim that has been prepared for the purpose of its presentation.

C.5.5 After the Contractor's presentation, Utility and/or its representatives shall have 2 hours to ask the Contractor questions about its claim and its presentation. Thereafter, the arbitrator(s) shall have 2 hours to ask the Contractor questions about its claim and its presentation.

C.5.6 On the morning of the second (2nd) day of the arbitration, Utility and/or its representatives shall have 3½ hours to make a presentation of its claim to the arbitrator(s). During its presentation, the Utilities shall not be permitted to produce any evidence that has not already been provided to the Contractor and the arbitrator(s) pursuant to Paragraph A.5.2, above. The Utility shall be permitted to produce any analysis or description of its claim that has been prepared for the purpose of its presentation.

C.5.7 After the Utility's presentation, the Contractor and/or its representatives shall have 2 hours to ask the Utility questions about its claim and its presentation. Thereafter, the arbitrator(s) shall have 2 hours to ask the Utility questions about its claim and its presentation.

C.5.8 Subject to the above maximum time limitations set forth above, the arbitrator(s) may conduct the arbitration in such manner as the arbitrator(s) deems reasonable.

C.5.9 The arbitrator(s) shall then have one (1) week to select in writing, as the arbitrators' award, that party's Final Offer that appears to be more reasonable, based on the presentations at the arbitration hearings.

C.5.10 The arbitrator(s) shall have no discretion to grant an award other than one of the two (2) Final Offers submitted by the parties.

C.5.11 The arbitration award shall be final and binding upon the parties to the arbitration and judgment upon the award may be entered in a court having jurisdiction.A.5.12 Any award for work that has already been performed shall be paid on the 7th day after receipt of the arbitrator's decision, or on the 30th day after completion of the work, whichever is later. Payment for work not yet completed at the time of the arbitrator's decision shall be paid within thirty
(30) calendar days of completion of work. Interest shall accrue from the date payment is due at the rate of nine (9%) percent per annum. Either party may cause judgment to be entered in accordance with the decision of the arbitrator(s) in a court in the State of New York, County of New York.

C.5.13 The Utility and the Contractor initially shall share the arbitrator's(s') fees and any other costs of the arbitration equally. The non-prevailing party shall then pay all arbitrator's(s') fees and costs of the arbitration and shall reimburse the prevailing party for its share of such fees and costs theretofore paid.

C.5.14 The parties may, at any time, settle any matter submitted to arbitration.

C.5.15 Since **Time is of the Essence**, should any party, at any time after the dispute has been submitted for arbitration, materially fail to comply with: (i) the Rules, (ii) any of these arbitration procedures, or (iii) any procedural decisions by the arbitrator(s), then the arbitrator(s) shall enter an order directing the party to cure its non-compliance within five (5) Business Days. If the party shall fail to comply with the order of the arbitrator(s) order within the five (5) Business Days, upon receipt of evidence that the non-complying party has failed to comply with the arbitrator's(s') order, the arbitrator(s) shall enter a final decision in favor of the other party in accordance with the other party's Final Offer.

[NO FURTHER TEXT HERE.]

"SPECIAL PROVISION FOR SANDRESPC"

1. For the avoidance of doubt, the Lower Manhattan Joint Bid Agreement, dated June 6, 2006, shall not apply to this project.

2. If there is extra work for a Utility, then such Utility may use any available applicable unit from the Unit Price Book, regardless of whether it is considered or defined as a City unit, such Utility's unit, or another Utility's unit.

3. The Contractor agrees that the Utilities are third party beneficiaries of the contract for a Joint Bid Project, and that the Utilities shall be entitled to rely upon and enforce any and all terms and conditions of the contract for a Joint Bid Project as it pertains to the Contractor and the performance of the Public Work, Interference Work, Shared Items and Utility Work.

4. If the Contractor claims or alleges that delays were caused by a utility for failure to supply and/or provide Specialty Contractors in a timely manner, then the Contractor may bring a claim against the Utility. Neither the Contractor nor the Utility shall bring a delay claim against the City either in a Court of Law or the City's contract dispute resolution board process, and to the extent the Contractor alleges a delay was caused by a Utility, the Contractor will be limited to bringing such legal action in a Court of Law and will not be able to seek arbitration over any delay claims or delay-related claims. If the Contractor and Utility initiate a legal action against each other, this legal action will be outside the jurisdiction of the City's contract dispute resolution board process and the City shall not be a party in the litigation process.

conEdison

Guideline Document for Public Improvement

CONST- 029 Revision Number 4

Purpose:	To update the Public Improvement Contractor Guideline document for safe entry into Sub-Surface Structures and moving energized underground cables.		
Revision Date:	7-30-2020	Next Revision Due Date:	7-30-2022
Supersedes Date:	6-30-2018	Revision Cycle Period:	Once every 2 years

TYPE	NAME	DATE
EH&S	Glenn D. Newell	7/30/2020
Technical	Joseph Bedell, Joseph Bedell Jr. John Stefandl & Marlon Kalloo	7/30/2020
Legal	Inna Rozenberg	7/30/2020

Summary of Changes:

1. Updated Reference Section to Include OSHA 1926 Subpart V
2. Removed Section on Moving Energized U.G. Cables Located Inside Sub-Surface Structures. (Previously Section 4.0 in Revision 3)
3. Updated/Revised Sections 1.4, 2.1, 2.2.2, 3.4, 3.6, 3.8, 3.9, 4.5.5, 4.7 & 4.7.1
4. Added New Section 4.5.4 – HDPE Conduit
5. Added New Chapter 5.0 – Breaking Out a Point of Entry (POE)

Training Requirements - N/A

DOJT/Course #, etc. Associated with this Operating Document:

None

Subject Matter Expert:	Marlon Kalloo	Approved Date:	7/30/2020
Approver Name:	Theresa Kong	Approved Date:	7/30/2020

Paper copies of Operating Documents are uncontrolled and therefore may be outdated. Verify current version prior to use.

Consolidated Edison Company of New York, Inc.

Guideline

For

Safe Entry into Sub-Surface Structures (Electrical Enclosed Space),

Moving Energized Underground Cables

Removal of Conduit from Cables, and

Breaking Point of Entry (POE's) Into Sub-Surface Structures

Performed by

Municipal Contractors

TABLE OF CONTENTS:

1.0 – Definitions
- 1.1 - Competent Person
- 1.2 - Attendant
- 1.3 - Electrical Enclosed Space
- 1.4 - CET Specification
- 1.5 - JB Specification
- 1.6 - Public Improvement Representative
- 1.7 – Municipal Contractor
- 1.8 - Electrically Competent Qualified Municipal Contractor

2.0 - References
- 2.1 – OSHA Sections 1910.269 & 1926 Subpart V
- 2.2 - Training
  - 2.2.1 – Electrically Competent Qualified Municipal Contractor
  - 2.2.2- Municipal Contractor Employee

3.0 - Safe Entry into Sub-Surface Structures, (Electrical Enclosed Space)
- 3.1 - Purpose
- 3.2 - Application
- 3.3 - Guideline
- 3.4 - Inspection / Testing
- 3.5 - Job Briefing
- 3.6 - Attendants
- 3.7 - Hazardous Atmosphere
- 3.8 - Personal Protective Equipment
- 3.9 – Con Edison's Personal Protective Equipment Guideline
- 3.10 - Access

4.0 - Removal of Conduit from Cables and Moving Energized Underground Cables Located Outside of Subsurface Structures
- 4.1 – Purpose
- 4.2 – Application
- 4.3 – Guideline
- 4.4 – Job Briefing
- 4.5 - Removal of Conduit from Cables
  - 4.5.1 - Pre-cast Concrete Conduit
  - 4.5.2 - Concrete Encased Conduit
  - 4.5.3 - Wooden Conduit
  - 4.5.4 – HDPE Conduit
  - 4.5.5 – Metal Conduit
- 4.6 - Visual Inspection
- 4.7 - Cable Moving Operations
- 4.7.1 - Personal Protective Equipment

5.0 - Breaking Out a Point of Entry (POE's) in an Electrical Enclose Space
- 5.1 – Activities Prior to creating POE's
- 5.2 – Creation of POE Operations

1.0 Definitions

1.1 Competent Person- As a general rule, a Competent Person is an individual who, by way of training and/or experience, is knowledgeable of OSHA and other applicable standards, is capable of identifying workplace hazards relating to the specific operation, and is designated by the employer with the authority to take all appropriate actions necessary to comply with all applicable standards and properly address hazards. Some OSHA standards add additional specific requirements that must be met by the Competent Person.

1.2 Attendant - An authorized individual who is stationed outside a sub-surface structure or an Electrical Enclosed Space to monitor the authorized entrants and to perform duties assigned including providing assistance to individual inside the sub-surface structure or Electrical Enclosed Space.

1.3 Electrical Enclosed Space – OSHA defines an Electrical Enclosed Space as a working space, such as a manhole, vault, tunnel, service box, or shaft, used for the operation and maintenance of electric power generation, transmission, and distribution lines and equipment. An Electrical Enclosed Space has a limited means of egress or entry, and is designed for periodic entry under normal operating conditions. Under normal conditions, an Electrical Enclosed Space does not contain a hazardous atmosphere, but may contain a hazardous atmosphere under abnormal conditions.

1.4 CET Specification – CET Specification defining private utility work within Municipal Construction Contracts.

1.5 JB Specification – Joint Bid specification defining private utility work within a NYC DDC Capital contract.

1.6 Public Improvement Representative - Con Edison employee, (Inspector, Construction Representative, Chief Construction Inspector, Project Specialist, or Manager) assigned to the Public Improvement section.

1.7 Municipal Contractor – Construction municipal contractor performing work for Municipal, State or other Public Agencies or Authorities.

1.8 Electrically Competent Qualified Municipal Contractor - is a Municipal Contractor employee designated and documented by the Municipal Contractor employer, in writing, as the electrically competent and qualified person who, by way of training and/or experience has the skills and techniques necessary to distinguish exposed live parts from other parts of electrical equipment, can identify non-insulated conductors from insulated conductors and/or cables and has the knowledge of the precautionary techniques, personal protective equipment, insulating and shielding materials, and insulated tools that are required for working on or near exposed energized electrical equipment. The Electrically Competent Qualified Municipal Contractor employee is capable of identifying varying workplace electrical hazards relating to the specific operation and has the authority to take appropriate actions, as required. In order to meet the task specific qualifications of this guideline, the Electrically Competent Qualified Municipal Contractor employee must be familiar with this document and be able to demonstrate adherence.

2.0 References

2.1 **OSHA Section 1910.269 –** Electric Power Generation, Transmission & Distribution **& 1926 Subpart V –**Electric Power Transmission and Distribution

2.2 **Training-** The OSHA Office of Training and Education (OTE) develops, directs, oversees, manages and ensures implementation of OSHA's national training and education policies and programs in support of OSHA's strategic goals with the objective of reducing occupational hazards through direct intervention, promoting a safety and health culture through compliance assistance, cooperative programs and strong leadership and maximizing OSHA effectiveness and efficiency by strengthening capabilities and infrastructure.

All Municipal Contractor employees shall be trained in and familiar with the safety-related work practices, safety procedures, and other safety requirements in section 1910.269(a)(2) and 1926 Subpart V that pertains to the Municipal Contractor employees' respective job assignments. Municipal Contractor employees' shall also be trained in and familiar with any other safety practices, including emergency procedures, such as manhole rescue, that are not specifically addressed by this referenced section but that is related to their work and is necessary for their safety.

Con Edison manhole inspection and underground awareness training can be scheduled through the Con Edison TLC upon request of the municipal contractor. OSHA 10 certification cards and CPR / First Aid training are prerequisites.

2.2.1 Electrically Competent Qualified municipal contractors shall also be trained and competent in:

a- The skills and techniques necessary to distinguish exposed live parts from other parts of electrical equipment

b- The skills and techniques necessary to determine exposed live parts from other parts, (determination of non-insulated conductors from insulated conductors / cables).

c- The knowledge of the precautionary techniques, personal protective equipment, insulating and shielding materials, and insulated tools that are required for working on or near exposed energized parts of electrical equipment. Generally, the Municipal Contractor will not be required to work on or near exposed/non-insulated energized parts of electrical equipment or cables. In the event special conditions exist requiring working near exposed/non insulated energized parts of electrical equipment or cables, the Municipal Contractor shall cease working and immediately contact the authorized Con Edison Inspector so that a further assessment of the condition can be evaluated, and appropriate guidance provided.

d- The Electrically Competent Qualified Municipal Contractor employee shall determine, through regular supervision and through inspections conducted on at least an annual basis that each Municipal Contractor employee is complying with the safety-related work practices outlined in this guidance document.

2.2.2 A Municipal Contractor employee shall receive additional training (or retraining) by the Electrically Competent Municipal Contractor under any of the following conditions:

a- If the Electrically Competent Qualified Municipal Contractor employee indicates that the Municipal Contractor employee is not complying with safety-related work practices

b- If new technology, new types of equipment, or changes in procedures necessitate the use of safety-related work practices that are different from those which the Municipal Contractor employee would normally use

c- If the Municipal Contractor employee must employ other safety-related work practices that are not normally used or that require modification from those stated in this guidance document

Note: OSHA requires retraining before commencing with a task that has not been performed within one year.

The required training shall be of the classroom and/or on-the-job type. The training shall establish Municipal Contractor proficiency in the work practices required and shall introduce the procedures necessary for compliance. The Electrically Competent Qualified Municipal Contractor shall certify that each Municipal Contractor employee has received the training required and retains records of this training to be supplied upon request by Con Edison.

3.0 Safe Entry into Sub-Surface Structures, (Electrical Enclosed Space)

3.1 **Purpose:** To establish a guideline that shall be employed for safe entry into Con Edison sub-surface structures by Municipal Contractors.

3.2 **Application:** Municipal Contractor personnel

3.3 **Guideline:** This guideline provides the requirements for practices that shall be employed for safe entry into Con Edison sub-surface structures. Municipal Contractor personnel requiring entry into Con Edison sub-surface structures shall adhere to this guideline.

3.4 Inspection/Testing

Prior to entry into a Con Edison sub-surface structure, properly trained and qualified Con Edison electrical personnel must conduct an inspection. The assessment will determine if the condition of the electrical facilities contained therein is sufficient to allow need based unrestricted access. Con Edison electrical personnel shall validate that the Con Edison sub-surface structure inspected is approved for need based unrestricted access. The Con Edison Inspector shall communicate and document to an Electrically Competent Municipal Contractor personnel any safety precautions to be taken and that the subsurface structure is safe for entry. Any condition deemed to be un-safe through this formal inspection process would preclude granting access.

An inspection must take place daily prior to Municipal Contractor entry. Once the cover is placed on the electric subsurface structure another inspection must occur prior to Municipal Contractor entry. Inspections include but are not limited to:

1) Testing for stray voltage by a qualified Con Edison employee or qualified Municipal Contractor employee.

2) Completion of atmospheric testing.

3) Determination that it is safe to enter the space.

4) A visual inspection for any abnormalities previously defined.

5) Communication of inspection results and hazards to the Con Edison inspectors and the municipal contractor supervisor.

3.5 Job Briefing

The Electrically Competent Qualified Municipal Contractor in charge shall conduct a job briefing with the municipal contractor's employees involved before they start the job. The briefing shall cover: the hazards associated with the job; work procedures involved; special precautions; and personal protective equipment requirements. The Electrically Competent Qualified Municipal Contractor shall instruct that all cables are to be treated as energized. Additional briefings shall be held if significant changes, which might affect the safety of the municipal contractor's employees, occur during the course of the work. The Electrically Competent Qualified Municipal Contractor shall document completion of the job briefing. A copy of the documented job briefing should be available upon request by Con Edison.

3.6 Attendants

While work is performed in a Con Edison sub-surface structure, a Municipal Contractor Attendant shall be available in the immediate vicinity to render emergency assistance. Sub-surface structure Attendants shall comply with applicable OSHA requirements.

3.7 Hazardous Atmosphere

Municipal Contractor personnel shall perform a hazardous atmosphere test before entry into any Con Edison sub-surface structure and perform continuous air monitoring in compliance with applicable OSHA requirements. Any atmospheric reading deemed to be un-safe would prohibit access to the structure. The Municipal Contractor shall immediately notify the authorized Con Edison Inspector.

3.8 Personal Protective Equipment

Municipal Contractor personnel requiring entry into Con Edison sub-surface structures shall refer to and comply with applicable OSHA requirements regarding the use of Personal Protective Equipment when performing this work. In addition, Con Edison is requiring that Municipal Contractor personnel assigned to work inside Con Edison sub-surface structures shall at all times wear Flame Resistant (FR) Clothing with a rating of 8 cal/cm^2 or HR2, a retrieval harness and that a retrieval device be on location. In addition, an atmospheric tester

must be in use continuously anytime a structure is occupied. See section 3.9 for Matrix on Con Edison's Personal Protective Equipment Guideline.

3.9 Con Edison Personal Protective Equipment Guideline

	Task	Class 0 Gloves	FR Clothing	FR Hood	Blast Goggles	Face Shield	Safety Glasses
1	Pavement breaking	N	N				Y
2	Breaking out concrete encased duct	Y	Y				Y
3	Moving energized primary cables that are located outside a structure while in proximity to joints	Y	Y	Y	Y		
4	Moving primary cables outside a structure (no joints involved)	Y	Y				Y
5	Moving energized secondary cables	Y	Y				Y
6	Hand excavate to locate precast ducts	N	N				Y
7	Hand excavate to locate direct buried cables	Y	Y				Y
8	Removing cable from conduit	Y	Y				Y
9	Breaking structure for POE from outside/inside	Y	Y			Y	Y
10	Breaking sub-structure walls	Y	Y				Y
11	Pulling rope within structure with energized cable	Y	Y				Y
12	Pulling rope in enclosed spaces	Y	Y				Y
13	Building a bench or platform within a subsurface structure to support or protect cables.	Y	Y				Y
14	Breaking out unknown precast electric duct	Y	Y				Y
15	Using digging bar over electric facility	Y	N				Y
16	Using digging bar over direct buried cables	Y	Y				Y
17	Using Pneumatic clay digger in vicinity of electric facility	Y	Y				Y
18	Installing forms for field-constructed sub-surface structures from inside the designed footprint when connected cables are present	Y	Y				Y
19	Installing forms for field-constructed subsurface structures from outside the designed footprint when connected cables are present	N	N				Y
20	Installing forms for field-constructed subsurface structure prior to first energization of new cables	N	N				Y
21	Saw cutting operation	Y	N				Y
22	Hand excavate to locate cable fault	Y	Y				Y
23	Hand excavating to find service dead leg	Y	Y				Y
24	Removing underground silo	Y	Y				Y
25	Regrade	Y	N				Y
26	Build/remove shunt box w/ energized cable inside	Y	Y				Y

3.10 Access

Municipal Contractor personnel shall not climb into or out of Con Edison sub-surface structures by stepping on cables or hangers.

4.0 Removal of Conduit from Cables and Moving Energized Underground Cables Located Outside of Subsurface Structures

4.1 Purpose: Establish a guideline that shall be employed by Electrically Competent Qualified Municipal Contractor personnel, meeting OSHA training requirements, when removing conduit from cables and moving Con Edison energized underground cables located outside structures.

4.2 Application: Municipal Contractor personnel

4.3 Guideline: This guideline details the requirements for practices that shall be employed when moving Con Edison energized underground cables located outside of Con Edison structures. Movement of energized cables on the Con Edison system shall be performed in accordance with the following directions. Only Electrically Competent Qualified Municipal Contractor personnel who been trained and meet necessary OSHA requirements for moving energized underground cables and in accordance with the following directions shall perform movement of energized cables on the Con Edison system.

4.4 Job Briefing

The Electrically Competent Qualified Municipal Contractor in charge shall conduct a job briefing with the Municipal Contractor's employees involved before they start the job. The briefing shall cover: the hazards associated with the job; work procedures involved; special precautions; and personal protective equipment requirements. The Electrically Competent Qualified Municipal Contractor shall instruct that all cables are to be treated as energized. Additional briefings shall be held if significant changes, which might affect the safety of the Municipal Contractor's employees, occur during the course of the work. The Electrically Competent Qualified Municipal Contractor shall document completion of the job briefing.

4.5 Removal of Conduit from Cables

All subsurface electric cable systems and related components shall be considered energized. Caution shall always be employed whenever conduits are opened to expose the interior cable.

4.5.1- Pre-cast Concrete Conduit

a- The conduit shall be fractured by striking the top end corner of the conduit with a 3 lb. hammer equipped with a non-conductive handle. When fracturing the conduit, all impact/chipping action shall be performed in such a manner so as to be directed across the top of the conduit away from any cable that may be inside of the conduit.

b- A small piece of the concrete conduit shall be chipped away so that a visual examination of the interior of the conduit can be made to verify the presence of cable. All impact/chipping actions shall be performed in such a manner so as to be directed across the top of the duct, away from the cable.

c- If cable is present, concrete-chipping operations shall continue until enough material has been removed to permit insertion of a non-conductive protective shield barrier between the conduit and cable or as directed by the authorized Con Edison Inspector based on existing field conditions. Material such as exterior grade plywood or lumber (min. thickness ¾") or suitably reinforced plastic sheet material (min. thickness 0.060" – e.g. Norplex Micarta RT504 NEMA Grade G-3) shall be used for this purpose. This shield material shall provide protection for the cable during the remaining conduit removal operations. The remainder of the conduit shall be fractured using the 3 lb. hammer equipped with a non-conductive handle. Care shall be taken so as to avoid any impact upon the cable, either by direct or indirect hammer blows.

d- During and after conduit removal operations, cable/conduit shall be properly supported as indicated in Section 5.7, below.

4.5.2 - Concrete Encased Conduit

a- The concrete encased conduit (including but not limited to pre-cast, fiber, tile, clay), shall be fractured by striking the top end corner of the conduit with a 3 lb. hammer equipped with a non-conductive handle. When fracturing the conduit, all impact/chipping action shall be performed in such a manner so as to be directed across the top of the conduit away from any cable that may be inside of the conduit.

b- For concrete encased conduit, it may be necessary to employ a handheld cold chisel (in conjunction with the 3 lb. hammer) to remove concrete encasement. If a chisel is utilized, all impact/chipping actions shall be performed in such a manner so as to be directed across the top of the duct, away from the cable.

c- If the concrete encasement is so dense as to render the use of a hammer and handheld chisel non-effective, an 8-pound sledgehammer may be employed. If neither of these devices proves effective, the use of a pneumatic chipping hammer will be permitted. The weight/size of the pneumatic chipping hammer shall not exceed 20 lbs. When utilizing a pneumatic chipping hammer, the device shall be securely positioned and be under close operator control at all times. The tool bit used for these operations shall be chisel shaped with a minimum width of two (2") inches. All impact/chipping actions shall be performed in such a manner so as to be directed across the top of the duct, away from the cable.

d- A small piece of the concrete conduit shall be chipped away so as to permit verification of the presence of cable inside the conduit.

e- If cable is present, concrete-chipping operations shall continue until enough material has been removed to permit insertion of a non-conductive protective shield barrier between the conduit and cable or as directed by the authorized Con Edison Inspector

based on existing field conditions. Material such as exterior grade plywood or lumber (min. thickness ¾") or suitably reinforced plastic sheet material (min. thickness 0.060" – e.g. Norplex Micarta RT504 NEMA Grade G-3) shall be used for this purpose. This shield material shall provide protection for the cable during the remaining conduit removal operation.

f- After installation of the shield material has been completed, continue removal of remaining conduit and encasement, using handheld and power tools.

g- During and after conduit removal operations, cable/conduit shall be properly supported as indicated in Section 5.7, below.

4.5.3 – Wood Conduit

a- Wooden conduit shall be split using a handheld cold chisel and a 3 lb. hammer equipped with a non-conductive handle. All impact/chipping action shall be performed in such a manner so as to be directed across the top of the conduit away from the cable.

b- The chisel shall use to create a small window in the conduit that will permit a visual inspection of the conduit interior for the presence of cable.

c- If cable is present, wood conduit material shall continue to be removed until enough material has been removed to permit insertion of a non-conductive protective shield barrier between the conduit and cable or as directed by the authorized Con Edison Inspector based on existing field conditions. Material such as exterior grade plywood or lumber (min. thickness ¾") or suitably reinforced plastic sheet material (min. thickness 0.060" – e.g. Norplex Micarta RT504 NEMA Grade G-3) shall be used for this purpose. This shield material shall provide protection for the cable during the remaining conduit removal operation.

d- After installation of the shield material has been completed, continue removal of remaining conduit

e- During and after conduit removal operations, cable/conduit shall be properly supported as indicated in Section 5.7, below.

4.5.4 – HDPE Conduit

a- HDPE conduit shall be split using hand tools or a handheld pneumatic rotary cutting tool. All splitting/cutting actions shall be performed in such a manner so as to be directed across the top of the duct, away from the cable.

b- Pneumatic Rotary Cutting Tool – A pneumatic rotary cutting tool shall be used to score an access area in the surface of the conduit., Prior to application of the cutting tool to the surface of the

conduit, the depth collar on the pneumatic rotary cutting tool shall be set so that the cutting bit will penetrate approximately ¾ of the wall thickness of the conduit. After the conduit has been cut to the maximum depth allowable (such that the bit does not fully penetrate the thickness of the conduit), a 3 lb hammer shall be used to knock out the access area (window) outlined by the cutting tool. This will permit visual inspection of the conduit interior for the presence of cable.

c- If inspection of the interior of the conduit reveals that cable is present, a non-conductive protective shield barrier shall be inserted into the conduit between the conduit and cable. This shield material shall provide protection for the cable during the remaining conduit removal operations. Material such as exterior grade plywood or lumber (min. thickness ¾") or suitably reinforced plastic sheet material (min. thickness 0.060" – e.g. Norplex Micarta RT504 NEMA Grade G-3) shall be used for this purpose. This shield material shall provide protection for the cable during the remaining conduit removal operations.

d- If inspection of the conduit interior does not reveal the presence of cable, the remaining conduit may be removed using the tool choices mentioned in 4.5.4.a.

4.5.5 - Metal Conduit

a. When removing metal conduit, the Municipal Contractor should first excavate and expose a collar connecting two sections of conduit. Once the collar is accessible, split and/or cut the collar off to inspect the conduit interior for the presence of cable. If a metal conduit collar is NOT easily accessible, or found within 20 to 40 feet of open excavation, proceed to section 4.5.5.b. Note: If the work to be performed is in response to a suspected natural gas leak or in the presence of natural gas, only the use of non-powered hand tools is allowed. Further guidance will be provided by Gas Engineering.

b. If a collar connecting two sections of conduit cannot be found, metal conduit will be split using hand tools and/or a handheld rotary cutting tool. All splitting actions will be directed across the top of the conduit, away from the cable. Note: If the work to be performed is in response to a suspected natural gas leak or in the presence of natural gas, only the use of non-powered hand tools is allowed. Further guidance will be provided by Gas Engineering.

c. Score the outline of an access area onto the surface of the conduit. Do not fully penetrate the conduit with the tool while making this outline.

d. Use this outline as a guide for further splitting and cutting operations that will eventually create a viewing window into the conduit.

e. If inspection of the conduit interior reveals the presence of cable, insert a non-conductive protective barrier between the cable and conduit wall. The barrier will provide physical protection for the cable during remaining conduit removal operations. Materials including, but not limited to, exterior grade plywood, lumber, and Norplex Micarta are acceptable. After the installation of the non-conductive protective barrier, the removal of the remaining conduit may proceed using the tool choices mentioned in section 5.5.4b.

f. If inspection of the conduit interior does not reveal the presence of cable, the remaining conduit may be removed using the tool choices mentioned in section 4.5.5b.

4.6 Visual Inspection

a- A visual inspection of cables located outside Con Edison structures that will be moved, shall be performed by Electrically Competent Qualified Municipal Contractor personnel or the authorized Con Edison Inspector.

b- After the conduits have been broken out (removed from the cables), the exposed cable(s) shall be inspected by the Electrically Competent Qualified Municipal Contractor personnel.

c- The cables shall be visually inspected by the Electrically Competent Qualified Municipal Contractor personnel, and determined to be free from any of the defects that would prevent relocation. Cable(s) shall be free of cracks, tears, and evidence of oil stains, swelling, or melting of the insulation. Cables shall not have any exposed conductor.

4.7 Cable Moving Operations – Outside Structures

a- Prior to moving any cables outside of a subsurface structure, the cables located within the associated connecting subsurface structures shall be inspected in accordance with the guideline requirements for moving cables within Con Edison sub-structures.

b- Municipal Contractor personnel experienced in moving Con Edison cables only shall move cables.

c- Cables shall not be moved until plastic "fair-leaders" are positioned at the duct edges to prevent chaffing damage.

d- Synthetic web slings having a minimum width of two (2) inches shall support cables that have been removed from conduit. Slings shall be used in a basket hitch configuration.

e- Conduits housing cables shall be supported using slings, cable, or rope. Conduits shall be supported in such manner as to maintain alignment with one another.

f- Maximum distance between support points shall be four (4) feet.

g- To prevent inadvertent over bending of the cables, the maximum vertical or horizontal offset between supports shall be one foot (1') for cable that is supported outside of conduit. For cable that is being moved while still installed in conduit, the conduit shall not be offset more than one foot per four-foot section of conduit.

h- Each set of cables (cables from one duct/conduit) shall be moved individually. Cables from multiple ducts/conduits shall not be moved as a bundle.

i- Relocation of cables shall be performed in a careful manner with the movement of cable under complete control at all times. There shall be no sudden movements of the cable or the conduit that contains cable.

j- An observer shall be positioned so as to determine proper slack in structures and to ensure that joints remain properly supported on rack arms and specified offsets are maintained. This observation shall be performed from outside of the structure while the cable is being moved.

k- Allowable horizontal and vertical offsets shall be determined based on applicable CET or JB item sketches and/or as directed by the authorized Con Edison Inspector.

l- Cables shall not be permitted to fall freely from temporary supports.

m- All cables supported by slings shall be visually inspected at the beginning and end of each work shift to ensure that no cracks, leaks, or other defects have developed.

n- Cables shall be repositioned with care when being moved into their final position for the installation of split conduit.

4.7.1 Personal Protective Equipment

Municipal Contractor personnel moving Con Edison energized cables shall refer to and comply with applicable OSHA requirements regarding the use of Personal Protective Equipment when performing this work. See Section 3.9 for Matrix on Con Edison's Personal Protective Equipment Guideline.

5.0 Breaking Out a Point of Entry (POE's) in an Electrical Enclosed Space

5.1 Activities Prior to creating POE's

5.1.1 Prior to creating POE's, the location of all conduit and cable passing through the section of the wall shall be visually identified and protected inside structure.

5.1.2 If any cables are required to be moved prior to creation of a POE, they shall be moved by properly trained and qualified Con Edison electrical personnel.

5.2 Creation of POE Operations

5.2.1 Using caution, expose the exterior section of the wall that you intend to create the POE (typically done in 2' – deep vertical sections) by carefully excavating on the outside of the structure.

5.2.2 When there is a potential for contact between the existing cables that have been visually identified and the tool being used to break out the POE, protect the cables using fire rated wood, phenolic board, cable shields or other acceptable non-conductive materials. Along with protecting the cable from coming in contact with the implement being used for breaking, cables on the walls in the POE area shall also be protected from falling debris using FR wood even if there is no potential for contact with said cables.

5.2.3 Once the following conditions have been satisfied:

5.2.3.1 Location of cables inside the structure and the associated conduit outside have been verified.

5.2.3.2 Protection of cable on both the inside and the outside of the structure walls

5.2.3.3 Structural integrity of the proposed POE area has been confirmed using hand tools

Then use the appropriate tool (up to and including a 90 lb. jackhammer) to create the POE on the section of structure wall that was previously prepared.

5.2.4 If a jackhammer is being used for the POE breakout operation, where feasible, support the tool from underneath to prevent slippage.

5.2.5 Where possible, the use of a 90 lb. jackhammer shall be avoided within 8" of a live conduit. If the competent person determines that the breakout can only be made using a jackhammer within 8" of live conduit, a physical barrier must be placed between the jackhammer and all facilities that could possibly come in contact with the jackhammer. The Municipal Contractor may then begin utilizing the 90 lb. jackhammer using a 3" bit or wider.

CONSOLIDATED EDISON COMPANY OF NEW YORK, INC.
4 IRVING PLACE
NEW YORK, NEW YORK 10003

ENGINEERING INSTRUCTION

CE-SI-1080

Guidelines for Protecting Existing Underground Transmission Electric Facilities from Nearby Construction Activities

REVISION 01

SEPTEMBER, 2018

Prepared By:	Jungmin Lee Hou	9/25/2018
	Civil Engineering – Engineer	Date
EH&S Review By:	Walter Stepien	8/16/2018
	EHS Design Engineering	Date
Civil Engineering SME Concurrence By:	Mun Lai Wong	9/18/2018
	Civil Engineering – Senior Engineer	Date
Transmission Operations SME Concurrence By:	Vernon Schaefer	9/19/2018
	Transmission Operations – Project Manager	Date
Transmission Engineering SME Concurrence By:	Arie Makovoz	9/20/2018
	Transmission Operations – Technical Expert	Date
Approve By:	Tom Villani	9/24/2018
	Transmission Engineering – Section Manager	Date
Approve By:	Michael Nuzzi	8/14/2018
	Civil Engineering – Section Manager	Date
Effective Date:	9/25/2018	

Paper copies of the Engineering Operations Manual are uncontrolled and therefore may be outdated. Please verify that you have the current version prior to use by viewing the Central Engineering website (http://ceng/).

TABLE OF CONTENTS

SECTION	SUBJECT	PAGE
1.0	SCOPE	3
2.0	DEFINITIONS	3
3.0	INSTRUCTIONS	4
4.0	EXHIBITS	11
5.0	REFERENCES	12

Paper copies of the Engineering Operations Manual are uncontrolled and therefore may be outdated. Please verify that you have the current version prior to use by viewing the Central Engineering website (http://ceng/).

SECTION I – GENERAL REQUIREMENTS

1.0 SCOPE

The scope of this document is a general guideline for the prevention of damage to high pressure pipes and coating for underground 69, 138 and 345 kV cable systems (electric facilities), caused by construction on ***("outside plant")*** properties not owned by CECONY. The guideline provides information such as:

a) general instructions ***and notification requirements*** prior to any construction activities;
b) clearance requirements;
c) precautions/protections to be made; and
d) special notes during construction activities

The guideline is not applicable for solid dielectric or self-contained oil-filled cables. Specific work plans for these type of Transmission Feeders shall be reviewed with Con Edison for approval.

1.1 APPLICATION

This instruction applies to all Consolidated Edison Company of New York, Inc. (CECONY) organizations and contractors, and outside "third party" organization with oversight responsibility for municipal public improvement contractors and non-municipal contractors, commencing or engaging in underground construction activities associated with excavations, foundations, and demolitions within the vicinity of CECONY's existing underground transmission system.

2.0 DEFINITIONS

2.1 **CECONY** refers to Consolidated Edison Company of New York, Inc.

2.2 **Contractor** is the construction firm hired by the Property Owner or Project Manager to perform the construction services.

2.3 **Designated Contact** is the contact person identified within the Project Manager Company and the Property Owner who has the responsibility to communicate on all of the planned construction works to be carried out safely.

2.4 **Encroachment Area** is the area where the ground disturbance occurs within 25 feet on land of the centerline of the ***Assumed*** Location of the existing electric facilities.

2.5 ***Assumed*** **Location** is the location of underground facilities determined from the subsurface investigations, ***such as record drawings or utility mark outs on streets.***

2.6 ***Known Location is the Assumed Location that is visually confirmed from hand dug test holes. Both horizontal and vertical locations of underground facilities shall be field verified at, (a) every proposed crossings, (b) every turn in direction, and (c) a minimum of two locations along a straight run of the existing Transmission Electric Facilities. A use of vacuum excavations is an acceptable means of***

Paper copies of the Engineering Operations Manual are uncontrolled and therefore may be outdated. Please verify that you have the current version prior to use by viewing the Central Engineering website (http://cengl/).

exposing underground facilities.

2.7 **Professional Engineer** is the engineer, currently licensed in New York State, hired by the Property Owner or Contractor to perform the engineering/design services.

2.8 **Property Owner** is the entity that has legal jurisdiction or ownership of the work area or new facility being installed.

2.9 **Tolerance Zone** is the area in which soil must be removed by non-mechanical means, such as hand excavations methods, to expose subsurface utilities *in absence of test pits.* It is *2-ft clear distance on both sides* of *the Assumed Locations and the width of the existing Transmission Electric Facilities*.

2.10 **Trained Personnel** refer to someone who is capable of identifying existing and predictable hazards in the surroundings or working conditions, has authorization to take prompt corrective measures to eliminate the hazards, and is trained and experienced in utility installation and inspection.

2.11 **Transmission Electric Facilities** refer to underground transmission feeders *69kV and higher* and associated circulation piping.

2.12 **Wingback** is the required longitudinal distance of a pipe to be exposed by excavation in order to achieve the desired relocated position.

3.0 INSTRUCTIONS

3.1 GENERAL INSTRUCTIONS

3.1.1 Follow the requirements outlined in the State of New York Department of Public Service NYCRR 16 Part 753, "Protection of Underground Facilities".

3.1.2 *Perform subsurface investigations and mark-outs prior to planning and performing any work in the Encroachment Area of the underground Transmission Electric Facilities.*

3.1.3 Mark-outs of the *Assumed* Locations of the underground facilities must be refreshed periodically, by the Contractor, to ensure underground facilities locations are always clearly identified over the entire project duration. If at any time the underground facilities marks become illegible, work must be stopped until the locations can be re-identified.

3.1.4 Contractor shall provide proper support of all *exposed* Transmission Electric Facilities during excavation activities.

3.1.4.1 A work plan, including pipe support design and calculations, shall be submitted to CECONY Engineering for approval, at least two weeks prior to performing any work in the Encroachment Area of the electric facilities. Refer to section 3.4 for pipe support design criteria.

3.1.4.2 *For management of excavated soils, refer to section 3.5, "Backfill".*

Paper copies of the Engineering Operations Manual are uncontrolled and therefore may be outdated. Please verify that you have the current version prior to use by viewing the Central Engineering website (http://ceng/).

3.1.4.3 CECONY Transmission Operation shall review the work plan on an as-needed basis and shall inspect the work area for pipe support, moving process and coating conditions prior to backfill.

3.1.4.4 The approved work plan shall be obtained by the Contractor prior to commencement of any work.

3.1.5 ***In absence of test pits, excavation within the Tolerance Zone shall be performed by hand only. Saw-cutting pavements within the Tolerance Zone is allowed with blade depths less than the confirmed asphalt pavement thickness***.

3.1.6 ***For Known Locations, a zone of protection shall be established by shielding the exposed facilities from damage that could result from falling debris, i.e. rocks, concrete, compacted soil, etc. Machine excavation or additional saw-cutting of pavements may then be allowed as directed by CECONY Engineering or CECONY Field Representative.***

3.1.7 Maintain clearances and separation distances to the existing Transmission Electric Facilities to the maximum extent possible at all times. Refer to section 3.2 for clearance and separation distance requirements.

3.1.8 Only Trained Personnel should work in the vicinity of exposed underground Transmission Electric Facilities.

3.2 CLEARANCES AND SEPARATION DISTANCE

3.2.1 Existing Transmission Electric Facilities within the Tolerance Zone must be protected in place. In general, a minimum of 3 feet of cover over the electric facilities shall be maintained. When less than 2 feet of cover is authorized because of special conditions, suitable guards shall be placed over pipes as described in CE-TS-3352. Clear distance between the guard and the pipe shall be a minimum of 6 inches. Contractor may be allowed to move the existing Transmission Electric Facilities by following the requirements described in section 3.2.2 and ***3.4.4***, or the new facilities must be relocated.

3.2.2 Maintain ***both*** the following minimum required ***vertical*** clearances and ***horizontal*** separation distances between ***existing*** Transmission Electric Facilities and ***the new subsurface*** facilities:

Paper copies of the Engineering Operations Manual are uncontrolled and therefore may be outdated. Please verify that you have the current version prior to use by viewing the Central Engineering website (http://cengl/).

Subsurface Facility	Minimum Required Vertical Clearance* to Electric Facilities [ft]		Minimum Required Horizontal Separation Distance* to Electric Facilities [ft]	
	Without Protection	With Protection	Without Protection	With Protection
Gas Transmission Facilities ⓐⓑⓒ	1.0	0.5	1.0	0.5
Gas Distribution Facilities ⓐⓑⓒ	1.0	0.5	1.0	0.5
Gas Service Facilities ⓑⓒ	1.0	0.5	1.0	0.5
Electric Distribution Facilities ⓑⓒ Duct Bank ≥ 6 Ducts Duct Bank < 6 Ducts	1.0 1.0	*** ***	12.0 6.0	*** ***
Steam Main ⓑ Pipe Size ≥ 6 inch Pipe Size < 6 inch	2.0 1.5	*** ***	12.0 6.0	*** ***
Liquid Petroleum Pipelines ⓑⓒ	1.0	0.5	1.0	0.5
Water & Sewer ⓑ**	2.0	***	2.0	***
Temporary Construction (e.g. sheeting, shoring, piles, etc.)	2.0	1.0	2.0	1.0
Other Utilities (e.g. telephone, cable, etc.) ⓑ	1.0	***	1.0	***
Permanent Structures (e.g. piles, piers, catch basins, manholes, etc.)	2.0	***	2.0	***

* *If it is not practical to achieve the minimum required clearance or separation distance, it may be further reduced provided that all parties involved agree to the reduction and that suitable protective materials are placed between the electrical and other facilities for the entire length of the reduced clearances.*

** **If Transmission Electric Facilities pass within 2-ft of water mains or services, Transmission Electric Facilities shall be protected as described in specification CE-TS-3352, Section 1.2.4.**

*** **As directed by CECONY Field Representative**

ⓐ *CECONY Corporate Instruction CI-920-1, "Gas Facilities – Clearances, Encroachments, Interference, and Corrosion".*

ⓑ *CECONY Specification CE-TS-3352, "Specification for the Installation of High Pressure Pipe for 69, 138 and 345 kV Cable Systems – Section I General Requirements".*

ⓒ *State of New York Department of Public Service NYCRR 16 Part 101, "Underground Electric Facility Construction".*

ⓓ *2012 NESC – National Electrical Safety Code, C2-2012, IEEE Standard Association.*

ⓔ *CECONY Specification CE-ES-3004, "Construction Specification for the Installation of Underground Fiberglass Reinforced Epoxy (FRE) and Polyvinyl Chloride (PVC) Conduits.*

Paper copies of the Engineering Operations Manual are uncontrolled and therefore may be outdated. Please verify that you have the current version prior to use by viewing the Central Engineering website (http://cengl).

3.3 Vibration Monitoring Program

3.3.1 Construction activities that involve blasting and non-blasting activities, including but not limited to pile driving, hydraulic breakers (hoe ram), drilling or boring activities, in the Encroachment Area of the underground facilities having the potential to produce vibration levels that may be susceptible to damaging existing Transmission Electric Facilities shall be monitored.

3.3.2 All blasting and non-blasting activities described in section 3.3.1 must be approved by CECONY Engineering prior to commencing the work and may require a vibration monitoring *plan* subject to CECONY review and approval. ***Allow minimum two weeks for CECONY Engineering's review and approval of a vibration monitoring plan.***

3.3.3 The Contractor is required to engage professional engineering services to conduct an existing conditions survey of the Transmission Electric Facilities, and an experienced vibration monitoring Consultant, ***with minimum 5 years of related experience in New York State***, is required to measure peak particle velocities prior to and during construction activities.

3.3.4 The measured vibration level experienced on the Transmission Electrical Facilities shall not exceed 0.5 in/sec. If maximum values are approached, construction activities shall be halted; construction means and methods shall be reevaluated, or an approved alternative construction methodology may be adopted ***to mitigate excessive vibration.***

3.3.5 The vibration monitoring plan shall include, but not be limited to, the following items:

3.3.5.1 Description of the Transmission Electric Facilities to be surveyed;

3.3.5.2 Monitoring equipment;

3.3.5.3 Monitoring device locations;

3.3.5.4 Monitoring frequency;

3.3.5.5 List of personnel to be notified (supplied by CECONY) in the event that vibration approaches the threshold limits.

3.3.6 The Contractor shall maintain a continuous log at the construction site and shall furnish a copy to the CECONY ***Field Representative*** upon request. The log shall also include receipts and notices of complaints. CECONY reserves the right to concurrently monitor any construction vibration levels. A preconstruction survey documenting the existing condition of the Transmission Electric Facilities to be monitored shall be conducted by the Contractor.

3.4 ***Transmission Electric Facility*** Support Design Criteria

3.4.1 Any and all materials/means used to hang, support, and/or protect the Transmission Electric Facility pipes must maintain the integrity of the pipe

Paper copies of the Engineering Operations Manual are uncontrolled and therefore may be outdated. Please verify that you have the current version prior to use by viewing the Central Engineering website (http://ceng/).

coating. Any and all damage to the coating must be reported to the CECONY representative on site; and no backfilling of the pipe can be performed until pipe coating is restored and inspected.

3.4.2 Prior to any Transmission Electric Facility pipe support work ***that deviates from the CET manual,*** the Contractor shall submit to CECONY Engineering the following for review and approval:

3.4.2.1 Drawings drawn to scale showing plans, sections and details of pipe support design stamped by a Professional Engineer.

3.4.2.2 Supporting calculations stamped by the Professional Engineer.

3.4.2.3 The design span for Transmission Electric Facility supports shall satisfy the allowable stress and deflection limits in accordance with ASME B31.1 considering both static loads and internal operating pressure. Additional loads due to jacking to move the Transmission Electric Facility pipes shall be accounted for in the support design.

3.4.2.4 Typical Transmission Electric Facility pipe parameters are listed in Exhibit A for calculating design loads for pipe supports.

3.4.2.5 The maximum spacing between supports shall not exceed 10 feet.

3.4.3 Pending a condition assessment of the pipe by CECONY, the Contractor may be allowed to adjust the location and/or elevation of existing Transmission Electric Facility pipes by transitioning the pipes with the minimum required Wingback distances for the required offsets as outline below. ***Wingback distances were computed for high pressure fluid filled (pipe-type) Transmission Electric Facilities only. Refer to drawing 516411 for schematic guideline on relocation of Transmission Electric Facilities.***

Nominal Pipe Size [in]	Minimum Required Wingback [ft]		
	6" Offset	9" Offset	12" Offset
5	88	108	125
6	98	120	138
7 (TUBE)	97	119	137
8	111	136	157
10	129	158	183
12	147	180	208

3.4.4 A work plan detailing the steps and means of moving the pipe shall be submitted to CECONY Engineering for approval. The plan shall identify the incremental sequence and distances to move the pipe in achieving the final offset, a

Paper copies of the Engineering Operations Manual are uncontrolled and therefore may be outdated. Please verify that you have the current version prior to use by viewing the Central Engineering website (http://ceng/).

description of jacks (or other equipment) to move the pipe, their locations and load capacity, and the protective measures that will be employed to not damage the pipe coating.

3.5 Backfill

3.5.1. Prior to backfilling the exposed electric Transmission Electric Facility, CECONY Transmission Operations/Corrosion Control shall be notified to inspect the condition of pipe and repair any areas of corrosion or damaged coating.

3.5.2. Approved material is to be used for backfilling under, adjacent and over the ***Transmission Electric Facilities*** pipe as described in specifications EO-8085 (for general backfill) and CE-TS-4074 (for thermal sand) and as depicted on EO-12640-B. ***345kV transmission feeders must be backfilled with thermal sand and 69 KV and 138kV transmission feeders must be backfilled with clean sand as described by specifications. Contractor must submit a copy of the gradation analysis and test report to CECONY Engineering for approval.***

3.5.3. Reuse of excavated soil may be permitted as approved backfill materials if it conform to the requirements outlined in the Specification, CE-TS-3352, latest revision. Contractor must submit a copy of the gradation analysis and the material must be approved by CECONY prior to its application.

3.5.3.1. ***For CECONY Contractors***, excavated soil must be managed in accordance with the requirements of CECONY GEHSI E05.11 "Management of Excavated Soils on Property Not Owned by the Company", latest revision. Excavated soil cannot be reused as backfill if it does not meet the requirements of the governing GEHSI.

3.5.4. Approved backfill shall be compacted in maximum 12" lifts in accordance with Specification EO-1181, latest revision, unless otherwise approved by CECONY.

3.5.5. ***The CECONY Field Representative may require in-place density tests to ensure proper compaction.***

3.6. SPECIAL NOTES FOR CONSTRUCTION ACTIVITIES

3.6.1. Each party shall use its best efforts to avoid or minimize, to the maximum extent practicable, any adverse environmental effects associated with the construction activities around subsurface Transmission Electric Facilities.

3.6.2. Perform daily job briefings with all employees before each shift, highlighting the hazards associated with working around Transmission Electric Facility and in excavations, i.e. high voltage electrical hazards, high pressure dielectric fluid or nitrogen gas pressure, coal tar pipe coatings, asbestos coating on pipe, work area protections, traffic, cave-ins, etc.

3.6.2.1. In the event that the Transmission Electric Facility pipe displays disturbed or disbonded asbestos coating, stop the work immediately and contact the CECONY Designated Contact for further directions.

Paper copies of the Engineering Operations Manual are uncontrolled and therefore may be outdated. Please verify that you have the current version prior to use by viewing the Central Engineering website (http://cengl/).

3.6.3. Long duration projects must be managed with vigilance to ensure that all employees maintain proper focus regarding the hazards associated with working around the Transmission Electric Facilities.

3.6.4. CECONY shall inspect the exposed Transmission Electric Facility to verify its condition prior to any work being performed. It is Contractor's responsibility to contact CECONY to schedule this inspection.

3.6.5. Any undermined Transmission Electric Facility ten feet or great in span must be supported with sand bags, nylon slings or other approved methods, taking special care to not damage the pipe coating.

3.7. EMERGENCY ACTION PLAN

3.7.1. In the event of emergency, such as pipe cracks, leaks, or breakage, Contractor must notify the CECONY's Designated Contact immediately. All work must stop and cannot proceed until the CECONY field representative has inspected the damage and further direction is provided.

Paper copies of the Engineering Operations Manual are uncontrolled and therefore may be outdated. Please verify that you have the current version prior to use by viewing the Central Engineering website (http://ceng/).

4.0 EXHIBITS

EXHIBIT A – TYPICAL TRANSMISSION STEEL PIPE/CONDUIT PARAMETERS*

Pipe Size	OD	t	Uniform Weight	Max Operating Pressure	Design Temperature
	[inch]	[inch]	[plf]	[psig]	[°F]
5	5.5625	0.258	22	600	140
6	6.6250	0.280	30	600	140
7 (Tube)	7.0000	0.250	49	400	140
8	8.6250	0.250	68	400	140
10	10.7500	0.250	91	400	140
12	12.7500	0.250	109	400	140

* *Transmission steel pipe parameters described hereon are pipes manufactured in accordance with ASTM A-523 Grade A steel only. For any other materials encountered for during excavation, Contractor shall notify CECONY and request material-specific parameters. Weight includes pipe, cables and oil for 7" pipes and bigger. 5" and 6" pipes are return pipes with no cable inside and the weights include weight of pipe and oil only.*

Paper copies of the Engineering Operations Manual are uncontrolled and therefore may be outdated. Please verify that you have the current version prior to use by viewing the Central Engineering website (http://ceng/).

5.0 REFERENCES

5.1 State of New York Department of Public Service, 16 NYCRR Part 753 – Protection of Underground Facilities.

5.2 State of New York Department of Public Service, 16 NYCRR Part 101 – Underground Electric Facility Construction.

5.3 New York City Department of Buildings Technical Policy and Procedure Notice #10/88, "Procedures for the Avoidance of Damage to Historic Structures".

5.4 New York State Department of Transportation, Engineering Instruction, EI-05-044, "Special Specification for Building Condition Survey(s) and Vibration monitoring (Non-Blasting)"

5.5 2012 NESC – National Electrical Safety Code, C2-2012, IEEE Standard Association.

5.6 ASME B31.1-2014 ASME Code for Pressure Piping, B31 – Power Piping.

5.7 ASME BPVC.II.D.C-2015, ASME Boiler & Pressure Vessel Code – Section II Materials – Part D – Properties (Customary).

5.8 CECONY Corporate Instruction CI-920-1 – Gas Facilities – Clearances, Encroachments, Interference, and Corrosion.

5.9 CECONY General Environmental Health and Safety Instructions

GEHSI E05.11 "Management of Excavated Soils on Property Not Owned by the Company"

5.10 Central Engineering Drawings and Specifications

CE-ES-3004, "Construction Specification for the Installation of Underground Fiberglass Reinforced Epoxy (FRE) and Polyvinyl Chloride (PVC) Conduits.

CE-TS-3352, "Specification for the Installation of High Pressure Pipe for 69, 138 and 345 kV Cable Systems – Section I General Requirements".

CE-TS-4074, "General Purchase Specification for Controlled Thermal Sand Material for High Pressure Pipe Type Cables".

CE-TS-4197, "General Purchase Specification for Steel Pipe for Electrical Facilities and Casings".

CE-SS-3400, "Specification for the Installation of Civil Material and Equipment – Section III Detail Standard Specification, Part 2200 – Excavation & Backfilling".

EO-12640-B, "H.P. Cable and Dielectric Fluid Circulating Pipe Trenching and Backfill".

Dwg 516411, "Guideline for Permanent Relocation of Feeder Pipes using "Wingback" Method".

Paper copies of the Engineering Operations Manual are uncontrolled and therefore may be outdated. Please verify that you have the current version prior to use by viewing the Central Engineering website (http://cengl).

5.11 Distribution Engineering Specification

EO-1181, "General Specification For Backfilling Of Trench And Small Openings"

EO-8085, "General Specification for Backfill and Bedding Material for Excavations".

Paper copies of the Engineering Operations Manual are uncontrolled and therefore may be outdated. Please verify that you have the current version prior to use by viewing the Central Engineering website (http://ceng/).

Con Edison, & ECS specialty work items

JB 122 – INCREMENTAL COST FOR MGP CONTAMINANT EXCAVATION, TRANSPORTATION, HANDLING & DISPOSAL

A. Description

Under this section, the Contractor shall provide all incremental labor, materials, equipment, insurance and incidentals required to excavate, temporary sheeting/shoring, transport, handle and dispose of MGP (manufactured gas plant) contaminants, included but not limited to:

1. Soil
2. Dirt
3. Debris
4. Sediment
5. Groundwater

Historic MGP operations were conducted adjacent to the Project area from approximately 1848 to the mid-1940's, and consisted of two main manufacturing facilities: East 11th Street Works and East 21st Street Works, where MGP-related contamination from these historic MGP operations has migrated into the area of the Project. These facilities were operated by Con Edison predecessor companies.

These MGP facilities existed before the construction of natural gas pipelines. The plants converted coal, or a combination of coke or coal, oil and water in the form of steam into a gas that could be distributed and used as a fuel for heating, cooking, and lighting. Byproducts of the gas production conducted at the former MGP facilities, such as coal tar, impacted the soil and groundwater in the vicinity of plant operations. MGP-related contamination associated with the East 11th Street Works and East 21st Street Works has affected portions of the Project Area. A third facility, the East 14th Street Works, also operated near the Project Area, but MGP-related contamination from this facility reportedly remains on-site and is not anticipated to intersect the area of the flood protection structure construction.

In consultation with the NYS Department of Environmental Conservation (DEC) and Con Edison, the City has prepared a Mitigation Work Plan (the "Mitigation Plan") that has been approved by DEC to address potential environmental and health impacts associated with MGP-impacted materials during the construction of the project site in the area impacted by the MGPs (the "MGP Mitigation Area"). The Mitigation Plan is attached hereto as Exhibit A. The MGP Mitigation Area is shown in the map attached hereto as Exhibit B. [This Exhibit will be generated based on City's work plan for excavation for the wells and the overall project as well as the DEC-approved site investigations already conducted by Con Edison that delineate the areas within which MGP Waste may be encountered.]

This item includes the additional material and effort(s), above and beyond the contract drawings. In consultation with the Resident Engineer, all work shall be performed with all applicable safety standards as directed by the Resident Engineer.

B. Materials

All materials used to excavate, transport, handle and dispose of MGP Waste shall be supplied by the Contractor and approved by Con Edison in consultation with the Resident Engineer. The Contractor shall be responsible to excavate, transport, unload, handle, store, and/or deliver MGP Waste to the required disposal facilities for the duration of the contract. It shall also be the Contractor's responsibility to inspect and verify upon delivery that the correct quantity of MGP Waste has been delivered.

C. Methods of Construction

The Contractor shall provide Con Edison with at least thirty (30) business days' advance written notification specifying the dates of the commencement of excavation in the MGP Mitigation Area, including a projected schedule. The Contractor shall provide Con Edison a schedule every week for all work within the MGP Mitigation Area that is planned to be carried out in the upcoming two-week period involving the excavation, temporary sheeting and shoring, handling, loading, treatment and disposal of MGP Waste at and from the MGP Mitigation Area. The Contractor or Resident Engineer shall provide Con Edison with a copy of such test results indicating the presence or absence of MGP Waste within ten (10) business days after the Contractor receive such test results. The Contractor shall afford Con Edison the opportunity to collect split samples during the testing of any suspected MGP Waste.

The Contractor shall identify any suspected MGP Waste encountered in connection with construction within the MGP Mitigation Area by visual and olfactory inspection, and shall promptly notify Con Edison and the Resident Engineer of the initial identification of such suspected MGP Waste. The Contractor shall provide Con Edison and the Resident Engineer a reasonable opportunity to perform confirmatory visual and olfactory inspection of such material identified by the Contractor within twenty-four (24) hours of the Contractor's notice.

In the event of a dispute between Con Edison and the Resident Engineer, as to whether the identified material is in fact MGP Waste, their respective field representatives shall confer in good faith to attempt to resolve the dispute. If Con Edison and the Resident Engineer fail to so resolve the dispute within three (3) business days, then upon written notice of either party, the Contractor shall as promptly as possible collect samples of the disputed materials for submission to META Environmental, Inc., 2200 West 25th Street, Lawrence, Kansas 66047 or such other environmental testing laboratory that is reasonably acceptable to both Con Edison and the Resident Engineer.

The environmental testing laboratory shall perform testing of samples by forensic fingerprint analysis of polycyclic aromatic hydrocarbons ("PAHs") and alkylated PAHs (petrogenic and pyrogenic discrimination) and PAH source allocation to determine whether the disputed material contains residual materials likely to have been generated by the MGPs. The laboratory's determination shall be dispositive of whether the disputed materials are MGP Waste.

The Contractor shall comply with the following requirements with respect to the management and disposal of MGP Waste in the MGP Mitigation Area:

- Dispose of any MGP Waste at an appropriate Con Edison-approved waste disposal or treatment facility (i.e, Con Edison's Approved TSDF List (attached)),
- Use appropriately licensed and Con Edison-approved haulers for the transportation of MGP Waste,

- Comply fully with the Mitigation Plan, DEC requirements and directives, and all Environmental Laws, including implementation of any required Community Air Monitoring Program ("CAMP");
- Maintain within the vicinity of the MGP Mitigation Area a complete and accurate tracking log of all MGP Waste leaving the MGP Mitigation Area and provide a copy of such log to Con Edison upon completion of excavation for the ESCR Project;
- Sign all required manifests and shipping papers for the transportation, treatment and disposal of MGP Waste as the "generator" of such waste;
- Prohibit re-use of MGP Waste as backfill, landfill cover or for any other purpose;
- Provide Con Edison with final approved copies of the following documents within ten (10) business days after receipt of same from the Contractors: (1) maps or figures showing the locations where samples of soil, groundwater or other environmental media were collected from the MGP Mitigation Area; (2) chain of custody forms for all media and waste samples; (3) laboratory reports of the results of such media and waste samples; (4) any data summaries and data validation reports prepared for such samples; (5) weight tickets (sometimes referred to as bills of lading) indicating the volume of MGP Waste received by the disposal facility and (6) copies of completed waste manifests for all loads of MGP Waste; and
- Comply with legal requirements, rules, regulations, directives or orders issued by any governmental authority with respect to soil excavation for the project generally.

D. Method of Measurement

The quantity to be measured for payment shall be in volume (cubic yards). Disposal tickets and other documentation from the approved disposal facility must be submitted to Con Edison as proof.

Any additional weight and substances added to mitigate the wetness or reduce water/liquid saturation of the MGP waste, will not paid under JB 122.

E. Price to Cover

The price bid shall cover the incremental cost of all labor, materials, equipment, insurance and incidentals necessary to properly handle and dispose of MGP Waste without disruption of service and in accordance with contract documents. The price shall also include the cost of additional sample testing to properly identify and verify questionable MGP Waste.

As applicable, unit costs (e.g., price per ton, price per day, etc.) and estimated quantities (e.g., number of tons, number of days, etc.) shall be included in the bid for each of the following categories:

1. **Excavation, Transportation, Handling and Disposal of MGP Waste**:
   - Incremental costs of excavating, temporary sheeting and shoring, transporting, handling, disposal and managing MGP Waste from the MGP Mitigation Area due to the excavation activities required for construction of the project, including any waste characterization testing required due to the presence or reasonably suspected presence of MGP Waste; and
   - Incremental costs of manifesting, off-site transportation and off-site disposal of

MGP Waste from the MGP Mitigation Area at appropriate Con Edison-approved waste disposal or treatment facilities and by Con Edison-approved licensed haulers for transportation of such waste;

2. **Community Air Monitoring Plan for MGP Waste**
   - Incremental costs of implementation of the Community Air Monitoring Plan for MGP Waste in accordance with the Mitigation Plan.

3. **Odor Control for MGP Waste**
   - Incremental costs of implementation of controls necessary to manage, mitigate or control odors or vapors during excavation due to presence of MGP Waste in the MGP Mitigation Area in accordance with the Mitigation Plan;
   - Incremental costs of air monitoring necessary to assess worker exposure as a result of the presence of MGP Waste in the MGP Mitigation Area; and
   - Incremental costs of occupational health and safety precautions (e.g., odor control) taken as a result of the presence or potential presence of MGP Waste in the MGP Mitigation Area.

4. **DEC Waste Generation Fees**
   - DEC waste generation fees as a result of the presence of MGP Waste in the MGP Mitigation Area.

F. References

Currently, references are not available because NYSDEC has not provided a ruling/decision to the East Side Coastal Resiliency project. When a ruling/decision is made, it will be a reference to this item specification. Note that this item specification may be revised based on the provided ruling/decision in the future.

JB 302 – FIELD COATING OF OIL-O-STATIC FEEDER PIPES

A. Description

Under this section, the Contractor shall provide all labor, tools, equipment, insurance and incidentals required to apply field coating and wrapping on Oil-O-Static feeder pipes at various locations within the contract limits in accordance with the specifications and as directed by the facility operator. The Oil-O-Static system consists of steel pipes containing high voltage cables and cooling oil. All work shall be in accordance with the Con Edison requirement G-8209, System B.

B. Materials

All materials required to apply coatings and wrappings as referenced in G-8209 shall be supplied by Con Edison.

C. Method of Construction

Some of the existing coatings on Oil-O-Static pipes may consist of coal tar wrap and may contain asbestos and/or PCB's. The Con Edison representative prior to backfilling must visually inspect all Oil-O-Static lines that are exposed during the performance of this contract. The Contractor shall notify the Con Edison representative to perform this inspection. Con Edison shall be allowed to perform an electrical spark test (jeeping) inspection of these pipes and obtain a sample of the coating for testing. The electrical spark test will indicate the amount of coating required to be applied and the sample test will determine the coating materials. If the tests are negative, the Con Edison representative will direct the Contractor to perform the required amount of coating prior to the pipes being backfilled. If the tests reveal the presence of asbestos and/or PCB's, the work will be considered "specialty work" and be performed by Con Edison forces or by a specialty Contractor hired by Con Edison. The Contractor will coordinate his operations to allow this work to be performed. The work shall be performed in accordance with Con Edison specification G-8209, which is included within this section. System B will be the only method that will be allowed. The coating shall be verified and accepted by the Con Edison representative prior to backfilling.

D. Method of Measurement

The quantity to be measured for payment shall the actual number of linear feet (L.F.) of each Oil-O-Static pipe for which coating is applied by the Contractor as prescribed.

E. Price to Cover

The price shall cover the cost of all labor, tools, equipment, insurance and incidentals necessary to unload, store and handle the necessary material and to perform all associated work to coat and wrap the Oil-O-Static lines as outlined in Con Edison specification G-8209, System B. The price shall also include the cost of all difficulties encountered to apply the coating in the area of other underground facilities and the additional excavation that may be required to obtain the necessary clearances to apply the coating; coordination with Con Edison forces or their Specialty Contractor; modifications to work methods or construction sequencing, any impact with maintenance and protection of traffic, and loss of productivity. Payment for all work herein specified shall be made on a one-time basis only; no payment for work herein specified shall be made for the same area more than one time. If the Contractor subsequently damages any

coatings paid for under this contract, the pipe shall be recoated in accordance with this item at the Contractor's expense.

F. References

1. Con Edison Gas Operations Standard G-8209 – Field Coating of Steel Pipe and Fittings Installed Underground and in Subsurface Structures

JB 400A – SURVEYED AND DRAFTED TEST PITS FOR UTILITY FACILITIES

A. Description

Under this section, the Contractor shall furnish all labor, materials, equipment, insurance and incidentals necessary to hand excavate utilizing pneumatic tools, sheet and maintain test pits at locations approved by the facility operator in consultation with the Resident Engineer. Test pits shall be dug in order to ascertain exact locations, cover, and invert elevations, configurations, clearances, alignment and operating status of existing utility facilities. A privately licensed NYS Land Surveyor, contracted by the Contractor, shall survey the test pit using surveying equipment, take all relevant measurements and elevations as directed by the facility operator(s) in consultation with the Resident Engineer, and draft findings using AutoCAD. The contractor shall inspect jointly with the facility operator and Resident Engineer, utility facilities and other structures uncovered. Tests to determine operating status of utility facilities shall be performed by facility operator. The pits shall be covered with steel plates during non-working hours, and uncovered, as required, until the inspection work is completed. Then, the pits shall be backfilled with clean fill, and resurfaced with temporary pavement. All traffic shall be maintained and all safety measures as stipulated shall be complied with.

B. Materials

A licensed NYS surveyor will provide signed and sealed test pit results using surveying equipment and reference the Borough of Manhattan, Downtown horizontal datum and NAVD88 vertical datum to correspond directly with design drawings. Surveyed test pits shall be delivered in PDF and AutoCAD formats.

C. Methods of Construction

1. Excavation – Existing pavement to be removed shall be neatly cut along lines of removal with a saw or other approved equipment which leaves a neat straight joint line along the juncture with subsequently replaced pavement. Excavation in the vicinity of utilities and other structures shall be performed using hand tools. Use of hand operated pneumatic and electric jackhammers will be permitted only for breaking pavement and removal of masonry, concrete and boulders, or as otherwise directed by the facility operator in consultation with the Resident Engineer. All materials hand excavated from test pits shall be properly disposed of away from site by the contractor. Test pits shall be hand excavated at locations as directed by the facility operator in consultation with the Resident Engineer. All test pits shall be hand excavated to a depth and size necessary to locate the existing facilities. All facilities that are encountered during the excavation of the test pit shall be supported and protected in a manner suitable to the facility operator. Sheeting shall be used when depth of excavation exceeds five feet. The sheeting required should be furnished and installed in full compliance with the State of New York and Federal Safety Codes requirements and as specified in contract, whichever is more stringent.
Care shall be taken that no existing utility facilities or other structures are broken or damaged. All broken or damaged facilities shall be reported immediately to facility operator who shall decide whether such facilities shall be repaired or replaced by company forces or by City contractor. Contractor shall hand excavate all material encountered, including large masses of concrete, cemented masonry and boulders, as directed by the facility operator. Any type of excavation protection used shall satisfy the following:

- Industrial Code Rule 753.
- Prevent injury to workers and the public, and avoid damage to existing utility facilities and structures, and to pavements and their foundations, from caving or sliding banks within the excavation.

2. Maintenance of Test Pits – Hand excavated test pits shall be maintained free of debris and kept dry by the contractor in order to permit the inspection and measurements and to determine

the locations of facilities. In order to accomplish this, contractor shall, upon completion of excavation and placement of sheeting (if depth greater than five feet), furnish and install adequate steel plates and posting over the hand excavated pits and shall temporarily remove all equipment debris and workers, and relocate barricades in order to open the full width of street to traffic during non-working hours. The contractor shall then, at no additional cost, relocate such barricades barrels, cones and other warning devices and remove steel plates, as and when directed by the facility operator in consultation with the Resident Engineer to facilitate the inspection of exposed facilities. When work is being performed and the pits are not covered with steel plates, the contractor shall provide complete and safe access to the test pits as may be required, and he shall provide construction barricades and maintain traffic at all times as shown or as directed by the facility operator in consultation with the Resident Engineer. Upon completion of test pit inspection by the facility operator, the pit shall be backfilled by the contractor in accordance with Contract requirements and all backfill material shall conform to contract specifications for such purpose.

3. Pavement and Sidewalk Restoration - After backfilling is completed, the contractor shall construct a temporary pavement consisting of six inches (6") thick asphaltic concrete mixture in roadway areas or a two inches (2") thick asphaltic concrete mixture in sidewalk areas in order to maintain existing pedestrian and vehicular traffic. This temporary pavement shall be maintained until permanent replacement as specified in contract.

D. Method of Measurement

The quantity to be measured for payment shall be the number of cubic yards of material removed from within the limits of the pit dimensions as directed by the facility operator in consultation with the Resident Engineer. The volume occupied by existing pipes or other structures remaining within the maximum payment lines will not be deducted from the total volume measured except, where the cross sectional area of these facilities exceeds four (4) square feet. As determined by the facility operator(s) in consultation with the Resident Engineer, the quantity measured for payment may be proportionated among the facility operator(s) involved in total volume hand excavated.

E. Price to Cover

The unit price bid per cubic yards for test pits shall cover all costs of labor, material, equipment, insurance and incidentals required to hand excavate test pits, including removal and disposal of hand excavated materials, sheeting, steel plating, all associated maintenance of traffic, backfill (paid under the appropriate City items) and compaction, in compliance with DOT requirements, all in accordance with the specifications and at the direction of the facility operator in consultation with the Resident Engineer. The price shall also cover the cost of providing temporary pavements and sidewalks. The price shall also include the cost of providing safe access to the excavation by facility operator for the performance of certain test to determine operating status of utility facilities prior to City work. The price shall also include the necessary support and protection of all utility facilities crossing, paralleling and /or encroaching the test pit excavation.

F. References

1. NYS Industrial Code Rule 753

JB 401 - TRENCH EXCAVATION FOR ADJUSTMENT OF UTILITY FACILITIES

A. Description

Under this section, the Contractor shall provide all labor, materials, equipment, insurance and incidentals required to excavate by hand to locate and expose subsurface utilities encountered during construction in preparation for horizontal and vertical movement (covered by other Sections), and to support and maintain and protect the integrity of utility facilities including but not limited to:

1. Conduits;
2. Conductor(s) and/or cable(s);
3. Concrete Encased Conduit Bank(s);
4. Steel Pipe(s)

The trench to be excavated shall be determined by the size of the utility and the extent of adjustment required to avoid interferences as detailed on Sketch JB 402 A during all phases of contract work. The work shall be performed in accordance with the specifications, and at the directions of the facility operator in consultation with the Resident Engineer.

B. Materials

All materials used to support and maintain and protect shall be similar to those indicated on Sketches JB 100 A and 100 A-1 and shall be supplied by Contractor and be approved by the facility operator in consultation with the Resident Engineer.

C. Methods of Construction

The Contractor shall cut, break and remove various thickness of surface and base pavement, excavate by hand to expose, support and protect all utility facilities within the trench and then furnish and tamp backfill after work has been completed by the parties indicated under other Sections. The facility operator(s) shall identify the locations of all utilities within the contract area as required by New York State Industrial Code Rule 753. As provided by the Rule the Contractor shall use hand excavation methods (pick and shovel or hand held power tools) directly below the pavement base to expose the utility. Upon exposing the affected utilities sufficiently to determine relationships and/or clearances at the sole discretion of the facility operator in consultation with the Resident Engineer, the Contractor shall be permitted to proceed with a combination of hand and machine excavation sufficiently to wingback all interferences of cable and conduit. The trench shall be adjusted so as to provide a nominal cover of 24" over the highest conduit. The width of the trench shall be as directed by the facility operator in consultation with the Resident Engineer. The bottom of the trench shall be graded smooth and tamped to minimize initial settlement and to avoid "point" support of conduits. All stones projecting into the trench bottom shall be removed, and the voids backfilled before conduits are placed. Where streets are not to final grade, the cover shall be measured from the final grade, or the existing grade, whichever provides the deeper trench.

D. Method of Measurement

The Contractor shall be paid per cubic yard (C.Y.) of trench actually excavated to the limits directed as detailed in Sketch JB 402 A and to the satisfaction of the facility operator in consultation with the Resident Engineer. When two or more utility facilities requiring horizontal or vertical adjustment with different owners are in the same trench, the facility operators shall jointly determine the percentage of ownership of the trench.

E. Price to Cover

The price for excavation shall include the cost of all labor, materials, equipment, insurance, and incidentals necessary to completely expose, support and protect and maintain the integrity of the facilities without disruption of service to the customers and in accordance with the Contract Documents, associated maintenance of traffic, and traffic plates and sheeting that may be required, cut, break and remove various thickness of surface and base pavement, excavate by hand to expose existing structures, furnish, place and tamp backfill after required vertical and/or horizontal adjustments have been completed under other Sections. Any required removing, trucking, storing, and disposing of material shall be deemed included in the unit price. The price shall also include the cost of providing temporary pavement restoration. Permanent pavement restoration shall be paid under other items. The price shall also include the cost of locating and supporting and protecting all utilities encountered including slings and beams installed for utility support when required. The price shall include maintaining the sheeting for the duration of the relocation and work required by the facility operator including but not limited to pipe-ripping covered under JB 402T.

F. References

1. NYS Industrial Code Rule 753
2. Sketch JB 100 A and A-1
3. Sketch JB 402 A

JB 402B – HORIZONTAL AND VERTICAL ADJUSTMENT OF ELECTRIC TRANSMISSION FACILITIES TO FINAL POSITION

A. Description

Under this section, the Contractor will hire a Con Edison approved subcontractor to provide all labor, materials, equipment, insurance and incidentals necessary and required to adjust, support, protect, maintain, and accommodate the integrity of transmission facilities, including but not limited to:

1. Oil-o-Static pipes;
2. Return lines;
3. Freeze lines;
4. Fuel lines.

The work shall be performed in accordance with the latest version of CE-SI-1080, Guidelines for Protecting Existing Underground Transmission Electric Facilities from Nearby Construction Activities and at the direction of the facility operator in consultation with the Resident Engineer.

Contractor to refer to section 3.6 of the latest version of CE-SI-1080 for special notes for construction activities.

Contractor to refer to section 3.7 of the latest version of CE-SI-1080 for emergency action plan.

B. Materials

Any and all materials/means used to hang, support and/or protect the transmission facilities must maintain the integrity of the pipe coating. Any and all damage to the coating must be reported to the Con Edison representative on site; and no backfilling of the pipe can be performed until pipe coating is restored and inspected.

All materials used to adjust, support, protect, maintain and accommodate the integrity of transmission facilities shall be supplied by the Contractor and be approved by the facility operator in consultation with the Resident Engineer.

C. Methods of Construction

Test pits shall be performed under specification JB 400A to identify exact locations of Con Edison transmission facilities prior to construction as directed by Con Edison in consultation with the Resident Engineer. The transmission facilities will be surveyed by the contractor in their existing position anywhere that they will require adjustment horizontally/vertically, as directed by Con Edison in consultation with the Resident Engineer, prior to movement into final position. These same transmission facilities will be surveyed by the contractor after they are adjusted to their final position.

The Contractor shall provide proper support of all transmission facilities during excavation activities and while the transmission facilities are exposed. Payment shall be covered under various appropriate joint bid items.

Con Edison or a specialty Contractor hired by Con Edison will visually inspect, test and perform necessary “specialty work” of any coating that appears to lack integrity on exposed oil-o-static

and return lines in accordance with JB 302 and the latest version of G-8209 prior to adjustment/movement and/or support of transmission lines. If any damage to the oil-o-static and/or return lines' field coating is caused by the Contractor, all costs associated with additional inspection, testing and "specialty work" performed to repair and remediate the coating and any and all delays incurred shall be at the Contractor's expense. If the integrity of the field coating is compromised on the oil-o-static and/or return lines' due to adjustment/movement and/or support of transmission lines per Con Edison guidelines, all costs associated with additional inspection, testing and "specialty work" performed to repair and remediate the coating and any and all delays shall be covered and paid for under JB 302. The latest version of Con Edison Gas Operations Standard G-8209, System B will be the only method that will be allowed. The coating shall be verified and accepted by the Con Edison representative prior to backfilling.

Methods of construction shall include but not be limited to the following:

1. Support

   a. Prior to any transmission facility pipe support work, the Contractor shall submit to Con Edison Engineering the following for review and approval:

      Drawings drawn to scale showing plans, sections and details of temporary support design stamped by a NYS Professional Engineer.

      Supporting calculations by the NYS Professional Engineer.

      The design span for temporary transmission facility supports shall satisfy the allowable stress and deflection limits in accordance with ASME B31.1 considering both static loads and internal operating pressure. Additional loads due to jacking to move the transmission facilities shall be accounted for in the support design and in accordance with reference drawing 516411.

      Typical transmission facility parameters are listed in Exhibit A of the latest version of CE-SI-1080 for calculating design loads for temporary pipe supports.

      The maximum spacing between supports shall not exceed 10 feet.

2. Vibration monitoring program

   a. Based on the Contractor's means and methods for support and protection of transmission facilities, refer to Section 3.3 in the latest version of CE-SI-1080 for details of the vibration monitoring program.

   b. Construction activities will be halted if, due to vibrations, electric transmission facilities coating is damaged and needs to be repaired. Any and all delays incurred shall be at the expense of the Contractor.

3. Adjust or move transmission facilities and/or support

   a. Prior to any transmission facility pipe adjustment work, the Contractor shall request for permission to move any Con Edison electric transmission facility from the Con Edison on-site construction representative. The Con Edison on-site construction representative will request permission from the Con Edison Energy Control Center. Prior to the Contractor moving pipes in any direction, approval through the Con Edison on-site construction representative is required.

   b. To perform electric transmission facility pipe adjustments that may be required for repair, remediation, abatement activities and/or moving into final position; the Contractor shall have and use acceptable equipment to lift/move pipes as necessary. Acceptable equipment for lifting feeder/oil return pipes include: air bag systems with appropriate regulators/controllers or come-alongs/chain hoists with nylon slings around pipes only. Excavation equipment (such as a backhoe) or other hydraulic hoists or jacks are not to be used.

   c. Pending a condition assessment of the transmission facility by Con Edison, the contractor may be allowed to adjust the location and/or elevation of existing transmission facilities by transitioning the pipes with the minimum required wingback distances for the required offsets as outlined below. Nominal pipe size excludes repair barrels/clamps of varying diameters, lengths and locations:

Nominal Pipe Size [in]	Minimum Required Wingback [ft]		
	3" to 6" offset	6" to 9" offset	9" to 12" offset
6"	98	120	138
7"	97	119	137
8"	111	136	157
10"	129	158	183
12"	147	180	208

Contractor to refer to Section 4.0, Exhibit A, in the latest version of CE-SI-1080 for typical transmission steel pipe/conduit parameters and drawing 516411.

   d. A work plan detailing the steps and means of moving the pipe shall be submitted to Con Edison Engineering for approval. The plan shall identify the incremental sequence and distances to move the pipe in achieving the offset, a description of jacks (or other equipment) to move the pipe, their locations and load capacity, and the protective measures that will be employed to not damage the pipe coating.

   e. If adjustment of transmission facilities greater than 12" is required, a work plan detailing the steps and means of moving the pipe incrementally shall be submitted to Con Edison Engineering for approval. As stated above, the plan shall identify the incremental sequence and distances to move the pipe in achieving the overall offset, a description of jacks (or other equipment) to move the pipe, their locations and load capacity, and the protective measures that will be employed to not damage the pipe coating.

D. Method of Measurement

The quantity to be measured for moving to final position, protecting and supporting transmission facilities shall be paid for by the linear foot (L.F.) of each line. A linear foot shall be defined as one (1) single pipe/line measured along its longitudinal axis that has been moved to its final position horizontally/vertically. Minimum required taper wingback lengths provided in the table above shall be paid for per longitudinal linear foot of pipe/line across varying appropriate pay items ranging from 0" up to and including 6", greater than 6" up to and including 9" and greater than 9" up to and including 12" adjustment in any direction.

Each type of utility adjustment shall be paid for separately; the types of utility adjustments are defined as follows:

JB 402B.1A	Existing transmission facility up to and including 6" nominal pipe size, adjusted 0" up to and including 6" in any direction, to final position
JB 402B.1B	Existing transmission facility greater than 6" nominal pipe size up to and including 12" nominal pipe size, adjusted 0" up to and including 6" in any direction, to final position
JB 402B.2A	Existing transmission facility up to and including 6" nominal pipe size, adjusted greater than 6" up to and including 9" in any direction, to final position
JB 402B.2B	Existing transmission facility greater than 6" nominal pipe size up to and including 12" nominal pipe size, adjusted greater than 6" up to and including 9" in any direction, to final position
JB 402B.3A	Existing transmission facility up to and including 6" nominal pipe size, adjusted greater than 9" up to and including 12" in any direction, to final position
JB 402B.3B	Existing transmission facility greater than 6" nominal pipe size up to and including 12" nominal pipe size, adjusted greater than 9" up to and including 12" in any direction, to final position

E. Price to Cover

The unit price bid per linear foot (L.F.) of transmission facility shall cover the cost of all labor, material, equipment, insurance, and incidentals necessary to shift, adjust, support, protect, maintain and accommodate the integrity of transmission facilities (measured by nominal pipe size, excluding repair barrels/clamps of varying diameters, lengths and locations) without damage to coating or disruption of service to the customers and in accordance with contract documents. The unit price bid shall also include the cost to: design temporary and/or permanent support systems of oil-o-static pipes, return lines and communication lines for approval by Con Edison, furnish and install supports, slings and beams for utility support; changes of sheeting method and/or configuration when required and where necessary to accommodate the utilities during all phases of contract work; any impact associated with maintenance and protection of traffic; and removal of sheeting around the utilities, and all else necessary and required to adjust the electric transmission facilities to final position.

The price to cover all survey work to determine the range of movement of transmission facilities to final position is covered in the cost of various bid items.

Thermal Sand/Sand backfill in accordance with the latest versions of EO-14620-13 and CE-SI-1080 shall be used around utility facilities and will be paid for under item JB 303 and the appropriate City items. Clean backfill shall be used if necessary starting approximately 15" above the top of the transmission facility and paid for under the appropriate City bid items.

If the field coating is damaged by the Contractor a Con Edison approved specialty contractor will perform an additional visual inspection/testing of exposed oil-o-static and return lines and repair and remediate the coating as required. All costs to perform this work and any additional excavation that may be required, modification of work methods and/or construction sequencing, any impact with maintenance and protection of traffic, and loss of productivity shall be covered by the Contractor. If the integrity of the field coating is compromised, due to adjustment/movement and/or support of transmission facilities performed per Con Edison guidelines, payment for additional visual inspection/testing, repair and remediation and field coating shall be covered and paid for under JB 302 in accordance with the latest version of G-8209.

F. References

1. NYS Industrial Code Rule 753
2. Item JB 302
3. Item JB 303
4. Item JB 400A
5. Item JB 401
6. Item JB 405A
7. CE-SI-1080
8. Dwg. 516411
9. EO-14620-13
10. Con Edison Gas Operations Standard G-8209 – Field Coating of Steel Pipe and Fittings Installed Underground and in Subsurface Structures

JB 402T - HORIZONTAL AND VERTICAL ADJUSTMENT OF TELECOMMUNICATIONS FACILITIES

A. Description

Under this section, the Contractor shall provide all labor, materials, equipment, insurance and incidentals required to adjust and support and protect and maintain and accommodate the integrity of telecommunication facilities including but not limited to:

1. Conduit(s);
2. Cables and Air Pipe
3. Concrete Encased/Capped Conduit Banks

The work shall be performed in accordance with specifications and at the direction of the facility operator in consultation with the Resident Engineer.

B. Materials

All materials used to adjust and support and protect and maintain and accommodate the integrity of utility facilities shall be similar to those indicated on the standard Sketches JB 100 A & 100 A-1 and shall be supplied by the Contractor and be approved by the facility operator in consultation with the Resident Engineer.

Materials used for replacing conduit(s) removed under this item shall be supplied by and installed by the Contractor and shall include but not be limited to the following:

1. Bends
2. Split and Solid Conduit(s) PVC and Steel
3. Couplings and Adapters PVC, Tile and Steel
4. Straps or plastic ties

PVC conduit and fittings shall be as supplied by American Pipe and Plastics, Type "C" or approved equal.
Steel Pipe and fittings shall conform to ASTM A53 Schedule 40
Tile to PVC adaptors shall be as supplied American U-Tel or approved equal.

C. Methods of Construction

Lengths of "wing-back" shall be determined by the facility operator in consultation with the Resident Engineer. All work performed prior to that approval shall be at the contractors risk.

Methods of construction shall include but not be limited to the following:

1 Removal and Support

a. Break with hand held power tools, remove and dispose of plain or reinforced concrete encasement.

b. Break with hand held power tools, remove and dispose of conduit(s) enclosures and conduit that contain conductor(s) and/or cable(s) except steel/Iron conduits, inner ducts and 1 ¼" to 1 ½" PVC "quad ducts. Breaking – "ringing and ripping" - of steel/iron conduits belonging to ECS shall be performed by ECS forces only. Contractor shall make safe the work area to accommodate the ECS forces.

c. Support and protect exposed conduits, cables, innerduct and airpipe as shown in Sketch JB 100A-1 and approved by the facility operator in consultation with the Resident Engineer.

d. ECS tenants cables may require inspection, testing and encapsulation before they can be shifted. Contractor shall make safe the work area to accommodate these forces. Contractor shall be notified by the facility operator of the ECS tenant requirements before the conduits are broken-out.

2 Adjust or Move Conductor(s) and/or cable(s) and support

a. Cable shall be relocated horizontally and/or vertically as directed by the facility operator in consultation with the Resident Engineer

b. Support and protect conductors and/or cables as shown on Sketch # JB 100 A-1 and/or as directed by the facility operator.

3. Replacement, Encasement, Protection and Support

a. Replace vacant and loaded conduit(s) with solid and/or split conduit(s) and adapters.

1) Vacant Conduit - Repairs to conduits shall not be permitted. All damaged or impaired lengths of conduit(s) shall be removed and replaced with new conduit(s). The number of vacant conduits replaced shall be confirmed by the facility operator.

2) Loaded Conduit - Replacement of conduits that are removed from around existing cable(s) or innerduct shall be accomplished with split plastic (PVC) or split steel conduits as directed by the facility operator. Where split and solid plastic or steel conduit is used, the conduit(s) shall be spaced 1½ inches from each other. All split PVC shall be secured with plastic straps spaced at a maximum distance of eighteen (18") inches. Plastic conduit shall be joined with plastic couplings.

3) Adapting - Joining plastic conduit to existing conduits of other diameters or material shall be done using single or multiple adapters, (supplied by contractor).

b. If due to subsurface conditions, the cover is less than 20" from finished grade, the duct shall be protected with steel plates furnished by the contractor and measured for payment under Item JB 403T.

c. Support and protect cable(s) and/or conductor(s) and conduit(s).

d. Verify vacant conduits and provide pull ropes.

e. Encase all exposed conduit with concrete (f'c = 1200 to 1500 psi maximum) with slump commensurate to completely fill voids around conduits. Concrete encasement shall extend to two (2") inches beyond the limits of the duct bank vertically and horizontally.

D. Method of Measurement

The quantity to be measured for breaking out conduits, removing concrete, moving, protecting and supporting conductors and replacing conduits with split and solid conduit, shall be paid for by the linear foot (L.F.) of each conduit replaced. A linear foot of conduit shall be defined as one (1) single conduit measured along its longitudinal axis that has been broken out or moved from its original location either horizontally and/or vertically and measured in its final location. Quad PVC ducts produced as one unit shall be consider one duct for each quad unit. All conduits removed and not restored shall be covered for payment under the appropriate bid items for Removal of Abandoned Masonry for Utility Facilities and/or Removal of Abandoned Utility Conduits.

Multiple tile duct bank with concrete protection cover is not considered concrete encasement.

Each type of utility adjustment shall be paid for separately, the types of utility adjustments are defined as follows:

JB-402T.1 Existing Concrete Encased Non-Steel/Iron Conduits Placed in Final Position without Concrete Encasement. (L.F.)

JB-402T.1A Existing Concrete Encased Non-Steel/Iron Conduits Placed in Final Position with Concrete Encasement. (L.F.)

JB-402T.2 Existing Non-Concrete Encased Non-Steel/Iron Conduits Placed in Final Position without Concrete Encasement. (L.F.)

JB-402T.2A Existing Non-Concrete Encased Non-Steel/Iron Conduits Placed in Final Position with Concrete Encasement. (L.F.)

JB-402T.R1A Existing Concrete Encased Steel/Iron Conduits Placed in Final Position with Concrete Encasement. (L.F.)

JB-402T.R2A Existing Non-Concrete Encased Steel/Iron Conduits Placed in Final Position with Concrete Encasement. (L.F.)

JB-402T.V1 Existing Vacant Concrete Encased Conduits Placed in Final Position without Concrete Encasement. (L.F.)

JB-402T.V1A Existing Vacant Concrete Encased Conduits Placed in Final Position with Concrete Encasement. (L.F.)

JB-402T.V2 Existing Vacant Non-Concrete Encased Conduits Placed in Final Position without Concrete Encasement. (L.F.)

JB-402T.V2A Existing Vacant Non-Concrete Encased Conduits Placed in Final Position with

Concrete Encasement. (L.F.)

JB-402T.J1 Existing Concrete Encased Conduits Placed in Final Position without Concrete Encasement. (L.F.) in Which Only Conduit Joints are Broken Out and Conduits Remain Intact.

JB-402T.J1A Existing Concrete Encased Conduits Placed in Final Position with Concrete Encasement. (L.F.) in Which Only Conduit Joints are Broken Out and Conduits Remain Intact.

JB-402T.J2 Existing Non-Concrete Encased Conduits Placed in Final Position without Concrete Encasement. (L.F.) in Which Only Conduit Joints are Broken Out and Conduits Remain Intact.

JB-402T.J2A Existing Non-Concrete Encased Conduits Placed in Final Position with Concrete Encasement. (L.F.) in Which Only Conduit Joints are Broken Out and Conduits Remain Intact.

E. Price to Cover

The unit price bid per linear foot (L.F.) of conduit shall cover the cost of all labor, material, equipment, insurance, and incidentals necessary to shift, adjust, support, protect, maintain and accommodate the integrity of utilities without disruption of service to the facility operator's customers and in accordance with contract documents. The price bid shall also include the cost of: breaking out, removal and disposal of plain or reinforced concrete encasements, conduits (except iron/steel), support of cables/conduits, replacement with field split, split and solid conduits, adapters, clamps, straps and couplings; verify vacant conduits and provide pull ropes; furnish and install concrete encasement, supports, slings and beams for utility support; changes of sheeting method and/or configuration when required and where necessary to accommodate the utilities during all phases of contract work; and removal of sheeting around the utilities, and all else necessary and required to complete the work.
The unit price shall include providing access to the facility operator pipe-ripping crews and tenants to verify and test cables before, during and after the pipe ripping operation completed by the facility operator or specialized contractor hired by the facility operator and after conduit removal by the Contractor The unit price shall include, but not limited to, opening and closing of fences; removal and replacement of temporary timber curb and opening and closing of traffic plates. Access to adjacent manholes impacted by the run is included in this item. JB 450 shall not be used in conjunction with JB-402T as JB-402T covers access to the work site at all times for work required under this item.

F. References

1. Sketches JB 100A and 100A-1
2. JB 403T
3. American Pipe and Plastics, P.O. Box 577, Binghamton, N.Y. 13902
4. American U-Tel, 9760 Smith Rd., Willoughby, Ohio 44094

JB 403T – FURNISH AND INSTALL STEEL PROTECTION PLATES FOR TELECOMMUNICATIONS FACILITIES

A. Description

Under this section, the Contractor shall furnish and install as required permanent steel protection plates over telecommunications facilities where directed by the facility operator(s).

B. Materials

Material shall be:

¼" thick ASTM A-36 plates. Maximum size 24" by 48".

3/8" thick ASTM A-36 plates. Maximum size 12" by 18".

Thickness to be determined by the facility operator(s)

C. Method of Construction

Steel protection plates shall be placed in accordance with the attached facility operator(s) standard sketch JB 403T. All protective plates shall overlap a minimum of 3".

D. Method of Measurement

The quantity for payment shall be the area of permanent steel plating protection furnished and installed (excluding overlap) and measured in place in Square Feet (S.F.).

JB 403T.1 – Furnish and Install 1/4" thick steel plate (S.F.)

JB 403T.2 – Furnish and Install 3/8" thick steel plate (S.F.)

E. Price to Cover

The price shall cover the cost of all labor, material, equipment, insurance, and incidentals necessary to complete the work.

F. References

Sketch JB 403T

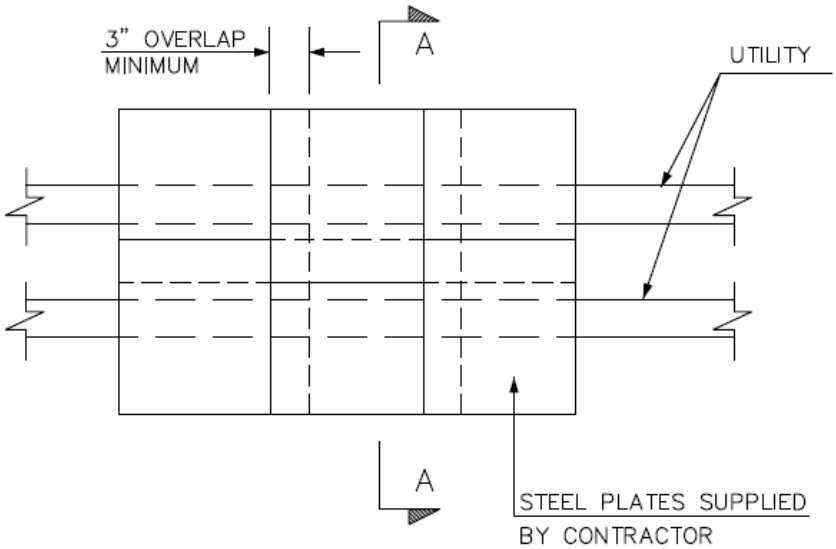

PLAN

NOT TO SCALE

AREA FOR PAYMENT
SHALL BE AS MEASURED
IN PLACE (EXCLUDE OVERLAP)

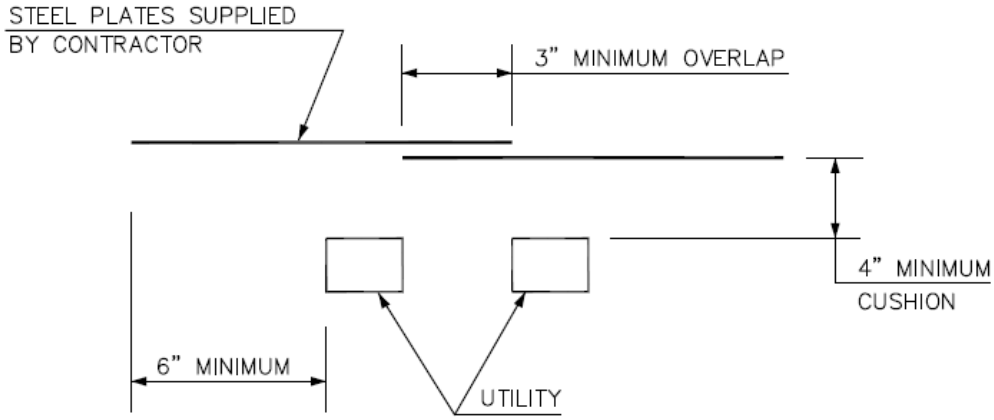

SECTION A–A

NOT TO SCALE

TYPICAL PLATE SIZES:
6" x 48" x 1/4"
12" x 48" x 1/4"
24" x 48" x 1/4"
12" x 24" x 3/8"

REVISIONS
09/13/2017

J.B. SKETCH	
PLACING STEEL PROTECTION PLATES FOR COMMUNICATION FACILITIES	
CONTRACT NO.	SKETCH NO. JB 403 T

JB 404 – Pier and/or Plate Method of Protection for Ductile Iron Water main with less than 24" Cover

A. Description:

Under this item, the Contractor shall provide all labor, materials, equipment, insurance and incidentals required to protect ductile iron water mains that are installed with a cover of 24 inches or less crossing over various utility facilities. The work shall be performed in accordance with the contract plans, specifications and at the direction of the facility operator(s), upon approval from the Resident Engineer.

B. Materials:

The Contractor shall supply all materials (concrete, beams, plates, etc.) necessary to provide the pier and plate method of protection as shown on BWS Standard Drawing No. 46464-Z.

C. Method of Construction:

The Contractor shall provide pier and plate protection in accordance with BWS Standard Drawing No. 46464-Z. The Contractor shall support, maintain and accommodate the water main and all other utility facilities during the installation of the pier and plate components. The Contractor shall be solely and totally responsible for the disturbances and/or any damages to such facilities.

D. Method of Measurement:

The quantity to be measured for payment shall be the additional amount of square foot (S.F.) of steel plate required to protect ductile iron water mains crossing over utility facilities with a cover of 24 inches or less, or for other shallow facilities where the pier and plate method may be required, as directed by the Facility Operator upon approval from the Resident Engineer.

E. Price to Cover:

The price shall cover the cost of all supervision, labor, material, equipment, and incidentals necessary to construct the specified method of protection. The work shall also cover the cost to cut, break, and remove additional pavement, additional excavation, sheeting, maintenance of traffic, traffic plates, and to furnish and install additional backfill and pavement restoration. This item does not cover the costs for special care excavation around utilities that are covered under separate items.

F. References:

1. BWS Standard Drawing No. 46464-Z.

JB 405 - EXCAVATION FOR INSTALLATION OF UTILITY FACILITIES

A. Description

Under this section, the Contractor shall provide all labor, materials, equipment, insurance and incidentals necessary to excavate, maintain trenches and backfill for the installation of new utility facilities including but not limited to:

1. Conduits
2. Non-cost sharing gas facilities
3. Steam mains
4. Steel pipe(s)

The trench to be excavated shall be determined by the size of the utility facility to be installed. The work shall be performed in accordance with applicable specifications, at the direction of the facility operator.

B. Materials

All materials used to excavate and prepare trenches shall be supplied by the Contractor and be approved by the facility operator.

C. Methods of Construction

1. Excavation – The Contractor shall saw cut and/or break and remove existing roadway which may include but is not limited to, asphalt, concrete and cobblestone, utilizing approved equipment that leaves a neat straight joint line along the juncture with subsequently replaced pavement. The Contractor shall be permitted to excavate utilizing a combination of machine and hand excavation, as field conditions warrant and as directed by the facility operator. The trench shall be adjusted so as to provide a nominal cover as defined in the specifications for the facility being installed over the new utility facilities or as required based on field conditions, applicable specifications, or as directed by the facility operator. The width of the trench shall be as directed by the facility operator or as shown on Sketch JB 603T (ECS only). The bottom of the trench shall be graded smooth with a minimum cushion of 3 inches of backfill material or in conformance with applicable specification and be compacted, to minimize initial settlement and to avoid "point" support of new utility facilities. All stones projecting into the trench bottom shall be removed, and the voids backfilled before the new utility facilities are installed. Where streets are not to final grade, the cover shall be measured from the final grade, or the existing grade, whichever provides the deeper trench. Excavation in the vicinity of utilities and other structures shall be performed using hand tools. The contractor shall properly dispose of all materials excavated away from site. Size and location of excavation shall be as directed by the facility operator. Trenches shall be excavated to a depth and size necessary to facilitate the installation of the new utility facility and in conformance with the applicable specification. All existing facilities that are encountered during trench excavating shall be protected in a manner suitable to the facility operator. Tight sheeting shall be used, as required, based on field conditions and/or when the depth of excavation is equal to or greater than five feet. Skeleton type sheeting will not be permitted. The sheeting required shall be furnished and installed in full compliance with the State of New York and Federal Safety Code requirements and in compliance with applicable specifications and/or as directed by the facility operator.

Care shall be taken that no existing utility facilities or other structures are broken or damaged. Contractor shall excavate all material encountered necessary to facilitate the installation of the new utility facilities, and as directed by the facility operator. Care should be taken to avoid damage to existing utility facilities and structures, and to pavements and their foundations, and to avoid caving or sliding banks within the excavation.

2. Maintenance of Trench Excavation - Excavated trenches shall be maintained free of debris and kept dry by the contractor. In order to accomplish this, contractor shall, upon completion of excavation and placement of sheeting (as required and/or if depth is equal to or greater than five feet), furnish and install adequate steel plates, as directed by the facility operator, and posting over the excavated trenches and shall temporarily remove all equipment debris and workers, and relocate barricades in order to open the full width of street to traffic during non-working hours, as required based on DOT requirements. The Contractor shall then, at no additional cost, relocate such barricades barrels, cones and other warning devices and remove steel plates, as and when directed by the facility operator to facilitate the installation of the new utility facility. When work is being performed and the excavations are not covered with steel plates, the Contractor shall provide complete and safe access to the trench as may be required, and shall provide construction barricades and maintain traffic at all times as shown or as directed by the facility operator. Upon completion of installation of the new utility facility, the trench excavation shall be backfilled by the contractor in accordance with Contract requirements and all backfill material shall conform to contract specifications for such purpose.

3. Pavement and Sidewalk Restoration - After backfilling is completed, the contractor shall install temporary pavement consisting of six inches (6") thick asphaltic concrete mixture in roadway areas or a two inches (2") thick asphaltic concrete mixture in sidewalk areas in order to maintain existing pedestrian and vehicular traffic. This temporary pavement shall be maintained until permanent replacement as specified in contract.

D. Method of Measurement

The quantity to be measured for payment shall be the number of cubic yards (C.Y.) of trench actually excavated and backfilled as directed by the facility operator or as shown on Sketch JB 603T for JB 603T Items. The volume occupied by existing pipes or other structures will not be deducted from the total volume measured.

JB 405.1 - Trench Excavations for installation of Utility Facilities with total depths less than five feet (C.Y.)

JB 405.2 - Trench Excavations for Utility Facilities with total depths equal to or greater than five feet (C.Y.)

E. Price to Cover

The unit price bid for the various trench excavation items shall include the cost of all labor, materials, equipment, insurance, and incidentals necessary to completely expose, protect and maintain the integrity of the facilities without disruption of service to the customers and in accordance with the contract documents. The price shall also include, installation of traffic plates as well as opening and closing of plates as may be required in order to provide access to trench; installation, removal and maintenance of tight sheeting as required; cutting, breaking and removing various thickness of surface and base pavement; excavation by hand to expose

existing structures; furnishing, placing and compacting clean backfill following installation of utility facility in compliance with DOT requirements. Any required removing, trucking, storing, and disposing of material shall be deemed included in the unit price. The price shall also include the cost of providing temporary pavement restoration. Permanent pavement restoration shall be paid under city items. The price shall also include the cost of locating and protecting all utilities encountered as required.

Clean backfill material in accordance with specifications shall be used around gas facilities and critical facilities shall be paid for under item JB 303.

F. <u>References</u>

1. Item JB 303
2. Sketch JB603T
3. Con Edison Specifications, latest revisions

CEHSP S13.00 – Excavation and Trenching

JB 450 – CONSTRUCTION FIELD SUPPORT

A. Description

Under this section, the Contractor shall provide all labor, materials, equipment, insurance and incidentals necessary to provide construction field support, while maintaining and protecting surface and subsurface facilities, at various locations approved solely by the facility operator. The Contractor shall encounter various surface and subsurface utility facilities while performing various construction field support operations, which may include but are not limited to working over, under, adjacent to, around, in between and in close proximity of:

1. Conduits
2. Conductors
3. Concrete encased conduit banks
4. Steel pipes
5. Gas mains
6. Steam mains
7. Oil-o-static facilities
8. Utility structures and covers

The actual construction field support operation to be performed by the Contractor shall be performed in accordance with the contract plans, specifications or as determined based on actual field conditions and at the sole discretion and direction of the facility operator. This item shall apply to various field support operation tasks for which there are no other applicable JB Items to cover the required work. This item will not apply and will not be paid when there are other applicable JB items available either partly or completely covering tasks described below as determined solely by the facility operator.

B. Materials

All materials used to provide construction field support shall be supplied by the Contractor and be approved by the facility operator in consultation with the Resident Engineer.

C. Methods of Construction

It is the intent of this item that the Contractor provides field support construction crews suffice to perform various item type tasks required as described. For the purpose of this item a crew consists of more than one non-management individual. The Contractor shall provide all labor and equipment necessary to perform the required task as described below under existing field conditions at various locations and at the sole discretion and direction of the facility operator in consultation with the Resident Engineer. The Contractor shall perform the necessary construction field support, while maintaining and protecting surface and subsurface facilities. The Contractor shall employ approved methods of operation, including the use of appropriate equipment and tools that will enable him to complete the field support operation work as described in the Item Type description below. Existing facilities that are encountered during the construction field support operation shall be supported and protected similar to those indicated on sketches JB 100A and 100B and in a manner suitable to the facility operator in consultation with the Resident Engineer and are deemed included in this item except as included under JB-402T. The Contractor shall properly dispose of all materials excavated away from site, which may require the use of hand held tools and equipment in order to ensure that the integrity of the underground utility facilities are not jeopardized. Care should be taken to avoid damage to existing utility facilities and

structures, and to adjacent curbs, sidewalks, pavements and their foundations, and to avoid caving or sliding banks within excavations.

D. Method of Measurement

1 – Quantity - The quantity to be measured for payment shall be the number of actual crew hours (CRHRS.) provided by the Contractor for performing the various types of construction field support operation as directed by the facility operator in consultation with the Resident Engineer.

2 – Type – The unit type to be measured for payment shall be based on the actual task performed by the contractor and covered by the applicable Item Type. The tasks described within the Bid Item Type below are provided as a guide only as to the general nature of the various functions included, but these examples in no way limit the use of the item to these functions only. The contractor should use this information in order to approximate the various required crew sizes necessary to perform the work covered by this item in a productive, safe and efficient manner. The actual construction crew size required to perform the field support operation shall be determined solely by the contractor in order to perform the required construction field support operation. It is the responsibility of the contractor to provide appropriate field support crews capable of performing required tasks in a productive, safe and efficient manner. The actual crew performing the operation will not be considered, by the facility operator in consultation with the Resident Engineer, when determining the applicable item type, which shall be only as per the task performed.

Note: Only one measurement type will be used for each defined construction field support area.

Type .1 = Construction Field Support requiring an average size survey crew that will perform typical field survey functions and provide quality data analysis reports.

Type .2 = Construction Field Support requiring an average small size crew capable of performing various tasks not requiring the use of a machine or operator, which may include but are not limited to: opening/closing subsurface structure cover(s), setting/resetting MPT setup(s), assisting Utility Facility/Specialty crew(s) not included in JB 402T or JB 450.5, performing conduit occupancy identification, clean-up storage work-site area, etc.

Type .3 = Construction Field Support requiring an average medium size crew capable of performing various tasks which include the use of a machine and operator, which may include but are not limited to: excavations due to cable failures, including emergency type excavations, construct manhole enclosures, installing support system for utility facilities, dewatering utility structures and excavations, opening/closing traffic and/or pedestrian plates, etc not included in JB 402T or JB 450.5.

Type .4 = Construction Field Support requiring an average large size crew capable of performing various tasks that requires the use of multiple machine(s) and operator(s), which may include but are not limited to: assistance during heat contingency, welding, repositioning and placing large diameter pipe, etc.

Type .5 = Construction Field Support requiring an average small size crew when requested by the facility operator to assist the facility operator or speciality contractor hired by the facility operator in shifting and supporting the conduits during pipe-ripping operations and all else necessary as required to complete the work including but not limited to constructing temporary work platform and temporary weather protection.

E. Price to Cover

The unit price bid for the various construction field support items shall include the cost of all labor, materials, equipment, insurance, and incidentals necessary to provide construction field support, which may include but is not limited to working over, under, adjacent to, around, in between and in close proximity of surface and subsurface utility facilities and exposing, supporting, protecting and maintaining the integrity of the facilities without disruption of service to the general public, utility customers and in accordance with the Contract Documents at various locations approved by the Facility Operator in consultation with the Resident Engineer. The unit price shall also include openings and closings of plates, and cones, barrels, arrow-boards, etc. and installing, shifting, moving and relocating cones, barrels, arrow-boards, etc. as may be required in order to provide access to excavations and during specialty work being performed by others excluding work operations covered under JB402T. The unit price shall also include excavating by hand to expose existing structures. Any required removing, trucking, storing, and disposing of material shall be deemed included in the unit price bid. The unit price shall also include the cost of supporting and protecting all utilities encountered during the construction field support operation, as required except work operations covered under JB 402T. The unit price bid shall also include alternate methods for construction field support, which may include changes in equipment and special operations, and sequencing and the use of only all hand-held tools due to existing field conditions, including potential delays and extended performance. Any and all Contractor method changes and operation modifications employed for construction field support are deemed to be included in the price bid for this item. Work under this item may be paid in combination with other City, utility or facility accommodation Items bid under other contract items except where expressedly excluded from that item.

F. References

1. Sketches JB 100A, JB 100B

JB 603T - FURNISH AND INSTALL TELECOMMUNICATIONS CONDUITS

A. Description

Under this Section, the Contractor shall provide all labor, materials, equipment, insurance, and incidentals required to procure and install conduit for the purpose of installing the facility operator's utilities. Conduit runs shall be as shown on the contract drawings or as specified by the facility operator in consultation with the Resident Engineer.

B. Materials

Conduit shall consist of:
PVC – 2" and 4" diameter or 1 ¼" Quad, Type "C" as supplied by American Pipe and Plastics or approved equal
Steel - 4" diameter, ASTM A53, Schedule 40 or approved equal
All conduit including sleeves, couplings, bends, pulling lines, etc. shall be supplied by the Contractor and approved by the facility operator in consultation with the resident Engineer.
The Contractor shall supply all material (Mortar, Brick, etc.) to make repairs to opening(s) as approved by the facility operator in consultation with the Resident Engineer.

C. Method of Construction

The Contractor shall install the specified conduit(s) then rod, mandrel and wire (install pulling line) the new conduits. When conduit pipes are to be connected to existing underground ducts, manholes, or boxes, the Contractor, using hand-held tools only, shall cut existing conduit, to pick-up existing underground conduits with new conduits, make openings into manholes or boxes, install/connect the conduit, and make repairs to seal the openings in the structure.

Steel pipe shall be used for shallow cover and crossing or paralleling steam mains as directed by the facility operator in consultation with the Resident Engineer.

When the facility operator required a combination of conduit types and materials the facility operator will define the configuration of the conduit system and the location of each type within the conduit bank. All conduit shall be spaced 1 ½" both vertically and horizontally from the adjacent conduit(s). All conduits shall be encased in lean concrete (f'c = 1200 to 1500 psi maximum) which shall extend 2" beyond each face of the conduit formation, above and each side of the conduit formation.

If due to subsurface conditions, the cover is less than 20" from finished grade, the duct shall be protected with steel plates furnished by the facility operator(s) and measured for payment under Item JB 403.

The work shall be performed in accordance with the contract plans, specifications, and at the directions of the facility operator in consultation with the Resident Engineer.

D. Methods of Measurement

The quantity to be measured for payment shall be the number of linear feet (LF) of conduit trench for which conduit was furnished and installed:

1. JB 603T.1 - Install 1 ea. 2", 4" or 1 ¼" Quad" Conduit (PVC or Steel) in any combination
2. JB 603T.2 - Install 2 ea. 2", 4" or 1 ¼" Quad Conduits (PVC or Steel) in any combination
3. JB 603T.3 - Install 4 ea. 4" or 1 ¼" Quad Conduits (PVC or Steel) in any combination
4. JB 603T.4 - Install 6 ea. 4" or 1 ¼" Quad Conduits (PVC or Steel) in any combination
5. JB 603T.5 - Install 8 ea. 4" or 1 ¼" Quad Conduits (PVC or Steel) in any combination
6. JB 603T.6 - Install 12 ea. 4" or 1 ¼" Quad Conduits (PVC or Steel) in any combination
7. JB 603T.7 - Install 15 ea. 4" or 1 ¼" Quad Conduits (PVC or Steel) in any combination
8. JB 603T.8 - Install 24 ea. 4" or 1 ¼" Quad Conduits (PVC or Steel) in any combination
9. JB 603T.9 - Install 30 ea. 4" or 1 ¼" Quad Conduits (PVC or Steel) in any combination

A Quad, consisting of four 1 ¼" conduits shall be supplied as one unit. For purposes of measurement and payment each quad unit of four 1 ¼" ducts shall be counted as one duct.

For any equivalent combination not fitting the above categories payment shall be based on the next higher category.

E. Price to Cover

The unit price per linear foot of Conduit trench shall cover the cost of all labor, materials, equipment, insurance and incidentals necessary to furnish, install, rod, rope, and perform any other associated work required to install the conduit completely in place. Where conduits are to be connected to ducts, manholes or boxes, the cost of cutting and/or breaking into the ducts, manholes or boxes, installing and sealing the conduit, including duct plugs; and making repairs to the openings in the structure shall be considered as included in the unit price bid for the installation of the conduit. All acceptance testing, including passing a mandrill with a diameter of 1/8" less than the inside diameter of the duct through the entire length of the duct, as required by the facility operator shall be considered as included in the unit price.

Payment for trench excavation shall be paid under Item JB 405.

Steel protection plates shall be paid for under Item JB 403T

F. References

1. Sketch JB 603T
2. Item JB 405
3. American Pipe and Plastics, P.O. Box 577, Binghamton, N.Y. 13902

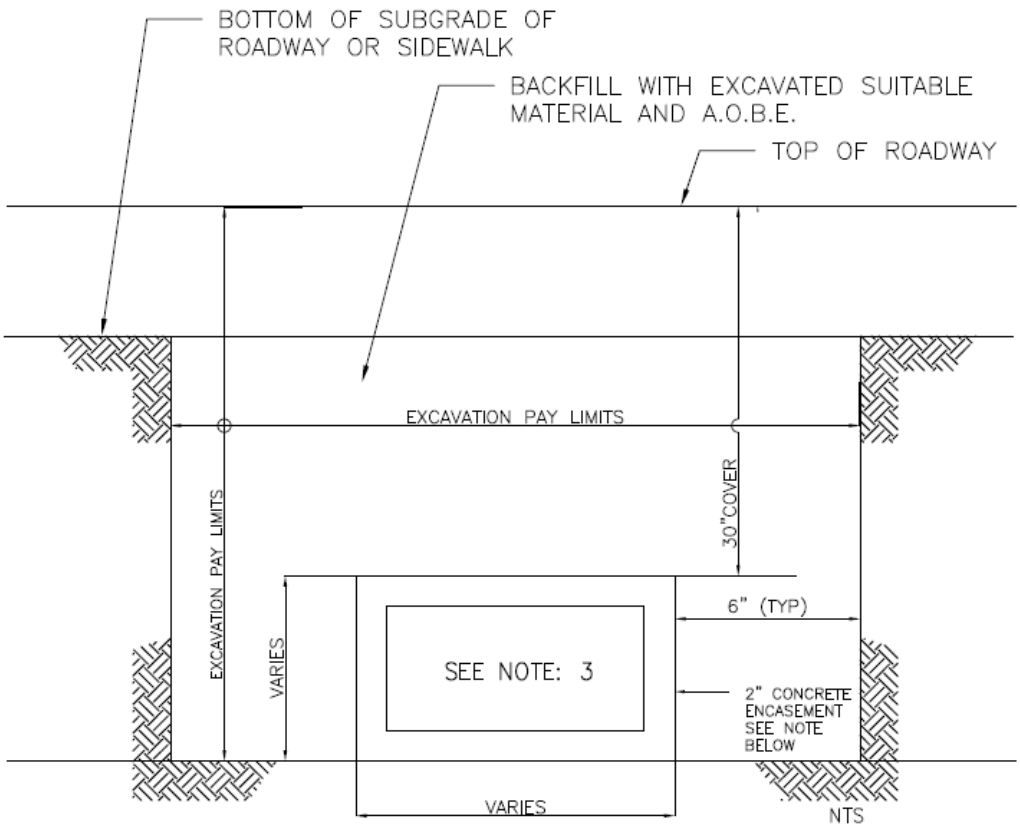

TYPICAL CONDUIT EXCAVATION AND BACKFILL

NOTES:

QUEENS, BROOKLYN & STATEN ISLAND

1– CONCRETE ENCASE REQUIRED IF TOP OF DUCTS IS 20" OR LESS FROM SURFACE AND ALL BENDS, SWEEPS AND CHANGE OF GRADE. FOR COVER LESS THAN 20", 3/8" STEEL (A36M) COVER PLATES IN ADDITION TO THE CONCRETE ENCASEMENT SHALL BE PROVIDED.

MANHATTAN & BRONX,

2– FOR COVER LESS THAN 20", 1/4" STEEL (A36M) COVER COVER PLATES IN ADDITION TO THE CONCRETE ENCASEMENT SHALL BE PROVIDED.

3– CONDUIT CONFIGURATION TO BE DETERMINED BY ECS/VERIZON REPRESENTATIVE.

J.B. SKETCH		
TRENCH EXCAVATION FOR CONDUIT		
09/13/2017	CONTRACT NO.	SKETCH NO. JB 603T

JB 610 - INSTALLATION OF STEEL GAS PIPE

A. Description

Under this section, the Contractor shall provide all labor, materials, equipment, insurance and incidentals required to install gas pipe and service pipe connections within the Consolidated Edison service territory. The Contractor shall satisfactorily clean, test and install new gas pipes, tracer wire, tracer wire termination boxes and appurtenances, complete as specified herein and as indicated on the contract drawings / layouts in accordance with the specifications of Con Edison Gas Engineering and as directed by the authorized Con Edison field representative. All work shall be performed in accordance with Con Edison Requirements, standard drawings and specifications referenced herein.

The Contractor shall install new gas utility facilities and appurtenances including but not limited to:

1. Non gas cost sharing gas facilities
2. Steel gas pipes
3. Phenolic board
4. Foam board
5. Adjustable & non-adjustable steel valve box risers
6. Pipe coatings (refer to Con Edison Specification G-8209)
7. Fittings
8. Valves

The trench to be excavated shall be determined by the size of the gas facility to be installed, extended or modified. The work shall be performed in accordance with all applicable specifications, and / or at the direction of the facility operator in consultation with the Resident Engineer and paid under other applicable contract bid items

B. Materials

All materials will be provided by Con Edison unless specifically noted otherwise. All materials provided by Con Edison shall be delivered to the Contractor at the construction site and unloaded by the Contractor.

C. Methods of Construction

The Contractor shall install the steel gas pipe(s), as shown on layouts and or drawings and sketches and as directed by the facility operator from designated facility operator service points and in accordance with the contract plans and Con Edison standard specifications. The method of construction shall include all labor, equipment and materials that are necessary to complete the installation of the steel gas pipe including cutting of the pipe, joining by welding, for each one (1) 40' random full length of pipe, complete with coating of pipe, installation of appurtenances and testing operations. The Contractor shall thoroughly clean each pipe length and fitting in order to remove all internal debris and foreign matter prior to the pipe being lowered into the trench. The installation of the new pipe must be performed by Operator Qualified mechanics. The Contractor must be approved by Con Edison.

A **'WARNING BURIED GAS LINES BELOW'** tape (class and stock number 024-6660) must be installed at a minimum of 12 inches above the top of the direct buried new replacement main.

Cathodic Protection

All buried or inserted steel pipe, fittings and appurtenances shall be coated and cathodically protected in accordance with the applicable Con Edison specifications

Protection plates shall be A36 steel 3/8" thick, provided by Con Edison.

Pressure Testing And Inerting:

The newly completed gas pipe shall be subjected to a combination strength-proof and leakage test by the Contractor in accordance with G-8204.

The Contractor shall install test connections as indicated on the drawings / layouts and EO-5261-C, "high Hats for Plugs and Nipples on 6 NPS – 30 NPS Steel Gas Mains 13.8 -2413.2 kPa".

All exposed coated steel gas mains where the coating is found damaged, shall be cleaned and the coating shall be replaced in kind in accordance with Con Edison specification G-8062.

Magnesium anodes and test stations shall be installed at the locations shown on the plans and layouts or as directed by the Engineer. Con Edison will supply thermit weld equipment. All test lead wires shall be tested by Con Edison's Corrosion Survey Section before backfilling.

D. Method of Measurement

The quantity to be paid for under this item shall be the actual number of linear feet (L.F.) of gas pipe installed for each pipe size, as measured along the center line of the pipe in its final position. The various types of pipe sizes are defined as follows:

JB 610.1 - Installation of Steel Gas Pipe - 1" Diameter
JB 610.1C - Installation of Steel Gas Pipe - 1-1/2" Diameter
JB 610.2 - Installation of Steel Gas Pipe - 2" Diameter
JB 610.3 - Installation of Steel Gas Pipe - 3" Diameter
JB 610.4 - Installation of Steel Gas Pipe - 4" Diameter
JB 610.6 - Installation of Steel Gas Pipe - 6" Diameter
JB 610.8 - Installation of Steel Gas Pipe - 8" Diameter
JB 610.12 - Installation of Steel Gas Pipe - 12" Diameter
JB 610.16 - Installation of Steel Gas Pipe - 16" Diameter
JB 610.20 - Installation of Steel Gas Pipe - 20" Diameter
JB 610.24 - Installation of Steel Gas Pipe - 24" Diameter
JB 610.30 - Installation of Steel Gas Pipe - 30" Diameter

E. Price to Cover

The unit price bid per linear feet (L.F.) shall include the cost of all labor, equipment and materials not provided by Con Edison as necessary to complete the work. The price per linear foot (L.F.) of steel gas pipe shall include pipe installation, cutting of pipe, joining by welding, installation of magnesium anodes, and installation of test stations, and repair of damaged pipe coatings and testing and inerting operations. Other work such as pavement saw-cutting, trench excavation, temporary timber sheeting, and backfilling with granular materials, compacting, valve installation, protection plates and pavement / curb restoration shall be paid for separately under other appropriate contract bid items.

F. References

The following Con Edison Standards apply to all materials:

1. Specifications:

G-100,285:	Compression End Couplings, Tees, Elbows, Line Caps and Riser Tees for Gas pipe and Tubing.
G-100,281:	Weld End Forged Fittings For Gas Piping
SPEC. 900:	Installing Gas Mains, Regulator Stations and Services in New York City and Westchester County.
G-699:	Installation of Gas Services Regulators Vent Line Protectors.
G-1064:	Shielded Metal Arc Welding Procedure for Welding Steel Pipe and Fittings.
G-1065:	Qualification of Welders and Welding Procedures.
G-1066:	Qualification of Radiographers and Radiographic Procedures.
G-1070:	Radiographic Inspection of Pipeline Welds.
G-8003:	Transportation, Handling and Storage of Steel Pipe for Gas Mains & Services.
G-8005:	General Specification for the Installation of Gas Distribution Mains.
G-8005:	Plastic Pipe Main Installations Section 6.0.
G-8062:	Extruded Polyolefin Coating on Steel Gas Pipe.
G-8100:	General Specification for the Installation of Gas Services.
G-8129:	Purging Gas Mains, Services and Regulator Stations.
G-8153:	Reinforcing Compression Fittings
G-8194:	Street Opening Color Coding, Permit Signs at Worksite and Pavement Restoration Markers.
G-8195:	Qualification of Contractors' Maintenance Engineers and Field Supervisors Engaged in Gas Maintenance / Installations of Mains and/or services.
G-8201:	Electric Spark Inspection of Coating on Steel pipe.
G-8204:	Gas Mains and Services
G-8205	Corrosion Control of Steel Gas Distribution Mains and Services.
G-8209:	Field Coatings of Steel Pipe and Fittings Installed Underground and in Subsurface Structures.
G-8217:	Regulator Vent Line Protectors

2. *Drawings:*

EO-4067-G:	Precast Concrete Cover for Curb Valve Box in Sidewalk.
EO-4070-C:	Cover for Curb Valve Box Located in the Street.
EO-13987-B	Temporary Locking Device for Cast Iron Curb Gas Valve Box.
EO-19241-D:	Base for .75 NPS through 2 NPS Plastic Valves and 1.5 NPS and 2 NPS Steel Valves Used on Gas Mains and Services.
EO-3942-C3:	Wood Plugs for Use with Cast Iron and Steel Pipes Street Valve Box.
EO-4019-C:	Street Valve Box.
EO-4044-C:	Cast Iron Curb Valve Box 2 ft. Extension – Type CV24
EO-4045-C:	Cast Iron Curb Valve Box 2 ft. 8 inch Extension – Type CV32
EO-5102-D:	Precast Concrete Base for Street Valve Box.
EO-5261-C:	High Hats for Plugs and Nipples on 6" NPS through 30 "NPS Steel
EO-5315-D:	Bed Blocks and Wedges for Laying Gas Pipe.
EO-6799-C:	Protective Covers for Gas Main Installations.
EO-14134-C:	Thermit Weld Process for Attaching Wire to Pipe or Fittings.
EO-14620-C:	Segmenting Long Radius Forged Elbows.
EO-13911-B:	Installation of 6" NPS through 30" NPS Weld End Ball Valve and Valve Box for High Pressure Gas Mains.
EO-16954-B:	Sheeting for Trenches and Excavations.
EO-15636-C:	Field Fabricated Extension for Gas Valve Installations over 4 feet of Cover.
502664:	Installation of Electronic Markers on Gas Mains & Services Pressure Testing Requirements for New and Replacement.

JB 611 - INSTALLATION OF STEEL GAS PIPE FITTINGS

A. Description

Under this section, the Contractor shall provide all labor, materials, equipment, insurance and incidentals required to install gas pipe fittings and service pipe fittings within the Consolidated Edison service territory. The Contractor shall satisfactorily clean, test and install new gas pipe fittings, tracer wire, tracer wire termination boxes and appurtenances, complete as specified herein and as indicated on the contract drawings / layouts in accordance with the specifications of Con Edison Gas Engineering and as directed by the authorized Con Edison Field Representative. All work shall be performed in accordance with Con Edison requirements, standard drawings and specifications referenced herein.

The Contractor shall install new gas utility facility fittings and appurtenances including but not limited to:

1. Non cost sharing gas facilities
2. Steel gas pipes
3. Phenolic board
4. Foam board
5. Adjustable & non-adjustable steel valve box risers
6. Pipe coatings (refer to Con Edison Specification G-8209)
7. Fittings
8. Valves

The trench to be excavated shall be determined by the size of the gas facility fittings to be installed, extended or modified. The work shall be performed in accordance with all applicable specifications, and / or at the direction of the facility operator in consultation with the Resident Engineer and paid under other applicable contract bid items

B. Materials

All materials will be provided by Con Edison unless specifically noted otherwise. All materials provided by Con Edison will be delivered to the Contractor at the construction site and unloaded by the Contractor.

C. Methods of Construction

The Contractor shall install the steel gas pipe fitting(s), (including but not limited to valves, elbows, weld end caps and tees), as shown on layouts and or drawings and sketches and as directed by the facility operator from designated facility operator service points and in accordance with the contract plans and Con Edison standard specifications. The method of construction shall include all labor, equipment and materials that are necessary to complete the installation of the gas steel pipe fittings including miter cut, joining by welding, coating of pipe fitting, and appurtenances complete, and testing operations. The Contractor shall thoroughly clean each pipe fitting in order to remove all internal dirt and foreign matter prior to the pipe being lowered into the trench. The installation of the

new pipe must be performed by Operator Qualified mechanics. The Contractor must be approved by Con Edison.

Fittings:

Fittings shall be defined as couplings, forged fittings, and valves, insulating joints, weld end cap and weldolets. All forged bends shall conform to Con Edison Specification G-100, 281, "Welded Forged Fittings for Gas Piping. Prior to installation, each insulating joint shall be checked with a continuity tester by Con Edison. The insulating joint shall not be installed until the Contractor has verified with the Con Edison Field Representative that a continuity test is acceptable. The cost for testing the insulation joint shall be included in the unit price for the appropriate size of the gas main.

A '**WARNING BURIED GAS LINES BELOW**' tape (class and stock number 024-6660) must be installed at a **minimum** of 12 inches above the top of the direct buried new / replacement main.

Cathodic Protection

All buried or inserted steel pipe fittings and appurtenances shall be coated and cathodically protected in accordance with the applicable Con Edison Specifications

Protection Plates shall be A36 steel 3/8" thick, provided by Con Edison.

Pressure Testing And Inerting:

The newly completed gas pipe fitting(s) shall be subjected to a combination strength-proof and leakage test by the Contractor in accordance with G-8204

The Contractor shall install test connections as indicated on the drawings / layouts and EO-5261-C, "high Hats for Plugs and Nipples on 6 NPS – 30 NPS Steel Gas Mains 13.8 -2413.2 kPa".

All exposed coated steel gas pipe fittings where the coating is found damaged shall be cleaned and the coating shall be replaced in kind in accordance with Con Edison Specification G-8062.

Magnesium anodes and test stations shall be installed at the locations shown on the plans and layouts or as directed by the Engineer. Con Edison will supply thermit weld equipment. All test lead wires shall be tested by Con Edison's Corrosion Survey Section before backfilling.

D. Method of Measurement

The quantity to be paid for under this item shall be the actual number of each (EA) steel gas pipe fitting installed for each pipe size. The various types of pipe sizes are defined as follows:

JB 611.1 - Installation of Steel Gas Pipe Fitting - 1" Diameter
JB 611.1C - Installation of Steel Gas Pipe Fitting - 1-1/2" Diameter
JB 611.2 - Installation of Steel Gas Pipe Fitting - 2" Diameter
JB 611.3 - Installation of Steel Gas Pipe Fitting - 3" Diameter
JB 611.4 - Installation of Steel Gas Pipe Fitting - 4" Diameter
JB 611.6 - Installation of Steel Gas Pipe Fitting - 6" Diameter
JB 611.8 - Installation of Steel Gas Pipe Fitting - 8" Diameter

JB 611.12 - Installation of Steel Gas Pipe Fitting - 12" Diameter
JB 611.16 - Installation of Steel Gas Pipe Fitting - 16" Diameter
JB 611.20 - Installation of Steel Gas Pipe Fitting - 20" Diameter
JB 611.24 - Installation of Steel Gas Pipe Fitting - 24" Diameter
JB 611.30 - Installation of Steel Gas Pipe Fitting - 30" Diameter

E. Price to Cover

The unit price bid per each (EA) shall include the cost of all labor, equipment and materials not provided by Con Edison as necessary to completely install the steel gas pipe fitting. The price per each (EA) fitting shall include pipe fitting installation, (including but not limited to valves, elbows, weld end caps and tees), miter cut, joining by welding, installation of magnesium anodes, and installation of test stations, and repair of damaged pipe coatings and testing and inerting operations. Other work such as pavement saw-cutting, trench excavation, temporary timber sheeting, and backfilling with granular materials, compacting, valve installation, protection plates and pavement / curb restoration shall be paid for separately under other appropriate contract bid items.

F. References

The following Con Edison Standards apply to all materials:

1. *Specifications:*

G-100,285:	Compression End Couplings, Tees, Elbows, Line Caps and Riser Tees for Gas pipe and Tubing.
G-100,281:	Weld End Forged Fittings For Gas Piping
SPEC. 900:	Installing Gas Mains, Regulator Stations and Services in New York City and Westchester County.
G-699:	Installation of Gas Services Regulators Vent Line Protectors.
G-1064:	Shielded Metal Arc Welding Procedure for Welding Steel Pipe and Fittings.
G-1065:	Qualification of Welders and Welding Procedures.
G-1066:	Qualification of Radiographers and Radiographic Procedures.
G-1070:	Radiographic Inspection of Pipeline Welds.
G-8003:	Transportation, Handling and Storage of Steel Pipe for Gas Mains & Services.
G-8005:	General Specification for the Installation of Gas Distribution Mains.
G-8005:	Plastic Pipe Main Installations Section 6.0.
G-8062:	Extruded Polyolefin Coating on Steel Gas Pipe.
G-8100:	General Specification for the Installation of Gas Services.
G-8129:	Purging Gas Mains, Services and Regulator Stations.
G-8153:	Reinforcing Compression Fittings
G-8194:	Street Opening Color Coding, Permit Signs at Worksite and Pavement Restoration Markers.
G-8195:	Qualification of Contractors' Maintenance Engineers and Field Supervisors Engaged in Gas Maintenance / Installations of Mains and/or services.
G-8201:	Electric Spark Inspection of Coating on Steel pipe.
G-8204:	Gas Mains and Services
G-8205	Corrosion Control of Steel Gas Distribution Mains and Services.
G-8209:	Field Coatings of Steel Pipe and Fittings Installed Underground and in Subsurface Structures.
G-8217:	Regulator Vent Line Protectors

2. *Drawings:*

EO-4067-G: Precast Concrete Cover for Curb Valve Box in Sidewalk.
EO-4070-C: Cover for Curb Valve Box Located in the Street.
EO-13987-B Temporary Locking Device for Cast Iron Curb Gas Valve Box.
EO-19241-D: Base for .75 NPS through 2 NPS Plastic Valves and 1.5 NPS and 2 NPS Steel Valves Used on Gas Mains and Services.
EO-3942-C3: Wood Plugs for Use with Cast Iron and Steel Pipes Street Valve Box.
EO-4019-C: Street Valve Box.
EO-4044-C: Cast Iron Curb Valve Box 2 ft. Extension – Type CV24
EO-4045-C: Cast Iron Curb Valve Box 2 ft. 8 inch Extension – Type CV32
EO-5102-D: Precast Concrete Base for Street Valve Box.
EO-5261-C: High Hats for Plugs and Nipples on 6" NPS through 30 "NPS Steel
EO-5315-D: Bed Blocks and Wedges for Laying Gas Pipe.
EO-6799-C: Protective Covers for Gas Main Installations.
EO-14134-C: Thermit Weld Process for Attaching Wire to Pipe or Fittings.
EO-14620-C: Segmenting Long Radius Forged Elbows.
EO-13911-B: Installation of 6" NPS through 30" NPS Weld End Ball Valve and Valve Box for High Pressure Gas Mains.
EO-16954-B: Sheeting for Trenches and Excavations.
EO-15636-C: Field Fabricated Extension for Gas Valve Installations over 4 feet of Cover.
502664: Installation of Electronic Markers on Gas Mains & Services Pressure Testing Requirements for New and Replacement.

JB 615 - INSTALLATION OF PLASTIC GAS PIPE

A. Description

Under this section, the Contractor shall provide all labor, materials, equipment, insurance and incidentals required to install plastic gas pipes and service connections within the Consolidated Edison service territory. The Contractor shall satisfactorily clean, test and install new plastic gas pipes, tracer wire, tracer wire termination boxes and appurtenances, complete as specified herein and as indicated on the contract drawings / layouts in accordance with the specifications of Con Edison Gas Engineering and as directed by the authorized Con Edison representative. All work shall be performed in accordance with Con Edison Requirements, standard drawings and specifications referenced herein.

The Contractor shall install new Gas Utility Facilities and appurtenances including but not limited to:

1. Non cost sharing gas facilities
2. Plastic pipes
3. Phenolic board
4. Foam board
5. Adjustable & non-adjustable valve box risers
6. Pipe coatings (refer to Con Edison Specification G-8209)
7. Molded fittings
8. Plastic valves

The trench to be excavated shall be determined by the size of the Gas facility to be installed, extended or modified. The work shall be performed in accordance with all applicable specifications, and / or at the direction of the facility operator in consultation with the Resident Engineer.

B. Materials

All materials will be provided by Con Edison unless specifically noted otherwise. All materials provided by Con Edison will be delivered to the Contractor at the construction site and unloaded by the Contractor.

C. Methods of Construction

The Contractor shall install the plastic gas pipe(s), as shown on layouts and or drawings and sketches and as directed by the facility operator from designated facility operator service points and in accordance with the contract plans and Con Edison Standard specifications. The method of construction shall include all labor, equipment and materials that are necessary to complete the installation of the plastic gas pipe including cutting of the pipe, joining by fusing, for each one (1) 40' random full length of pipe, and appurtenances complete, and testing operations. The Contractor shall thoroughly clean each pipe length and fitting in order to remove all internal debris and foreign matter prior to the pipe being lowered into the trench. The installation of the new pipe must be performed by Operator Qualified mechanics. The Contractor must be approved by Con Edison.

A '**WARNING BURIED GAS LINES BELOW**' tape (class and stock number 024-6660) must be installed at a **minimum** of 12 inches above the top of the direct buried new / replacement main. When new / replacement mains are inserted, the tape is to be installed above all exposed pipe in tie-in and service excavations.

Protection Plates shall be A36 steel 3/8" thick, provided by Con Edison.

Pressure Testing Inerting:

The newly completed gas pipe shall be subjected to a combination strength-proof and leakage test by the Contractor in accordance with G-8204

The Contractor shall furnish all material, transportation and equipment, including gas and air necessary to perform and complete the pressure testing and inerting operations, including the equipment used to record the test. Inerting shall be defined as the process of displacing air or natural gas in a facility with an inert gas.

D. Method of Measurement

The quantity to be paid for under this item shall be the actual number of linear feet (LF) of plastic gas pipe installed for each pipe size, as measured along the center line of the pipe in its final position.

JB 615.1A - Installation of Plastic Gas Pipe – ½" Diameter
JB 615.1 - Installation of Plastic Gas Pipe - 1" Diameter
JB 615.1B - Installation of Plastic Gas Pipe - 1-1/4" Diameter
JB 615.1C - Installation of Plastic Gas Pipe - 1-1/2" Diameter
JB 615.2 - Installation of Plastic Gas Pipe - 2" Diameter
JB 615.3 - Installation of Plastic Gas Pipe - 3" Diameter
JB 615.4 - Installation of Plastic Gas Pipe - 4" Diameter
JB 615.6 - Installation of Plastic Gas Pipe - 6" Diameter
JB 615.8 - Installation of Plastic Gas Pipe - 8" Diameter
JB 615.10 - Installation of Plastic Gas Pipe - 10" Diameter
JB 615.12 - Installation of Plastic Gas Pipe - 12" Diameter
JB 615.16 - Installation of Plastic Gas Pipe - 16" Diameter

E. Price to Cover

The unit price bid per linear feet (LF) shall include the cost of all labor, equipment and materials not provided by Con Edison as necessary to complete the work. The price per linear foot (LF) of plastic gas pipe shall include pipe installation, cutting of pipe, joining by fusing, and all other work necessary to completely install the plastic gas pipe, and testing and inerting operations. Other work such as pavement saw-cutting, trench excavation, temporary timber sheeting, and backfilling with granular materials, compacting, valve installation, protection plates and pavement / curb restoration shall be paid for separately under the appropriate contract bid items.

F. References

The following Con Edison Standards apply to all materials:

1. Specifications:

G-100,285: Compression End Couplings, Tees, Elbows, Line Caps and Riser Tees for Gas pipe and Tubing.
G-100,281: Weld End Forged Fittings For Gas Piping
SPEC. 900: Installing Gas Mains, Regulator Stations and Services in New York City and Westchester County.
G-699: Installation of Gas Services Regulators Vent Line Protectors.
G-1064: Shielded Metal Arc Welding Procedure for Welding Steel Pipe and Fittings.
G-1065: Qualification of Welders and Welding Procedures.
G-1066: Qualification of Radiographers and Radiographic Procedures.
G-1070: Radiographic Inspection of Pipeline Welds.
G-8003: Transportation, Handling and Storage of Steel Pipe for Gas Mains & Services.
G-8005: General Specification for the Installation of Gas Distribution Mains.
G-8005: Plastic Pipe Main Installations Section 6.0.
G-8062: Extruded Polyolefin Coating on Steel Gas Pipe.
G-8100: General Specification for the Installation of Gas Services.
G-8129: Purging Gas Mains, Services and Regulator Stations.
G-8153: Reinforcing Compression Fittings
G-8194: Street Opening Color Coding, Permit Signs at Worksite and Pavement Restoration Markers.
G-8195: Qualification of Contractors' Maintenance Engineers and Field Supervisors Engaged in Gas Maintenance / Installations of Mains and/or services.
G-8201: Electric Spark Inspection of Coating on Steel pipe.
G-8204: Gas Mains and Services
G-8205: Corrosion Control of Steel Gas Distribution Mains and Services.
G-8209: Field Coatings of Steel Pipe and Fittings Installed Underground and in Subsurface Structures.
G-8217: Regulator Vent Line Protectors

2. Drawings:

EO-4067-G: Precast Concrete Cover for Curb Valve Box in Sidewalk.
EO-4070-C: Cover for Curb Valve Box Located in the Street.
EO-13987-B: Temporary Locking Device for Cast Iron Curb Gas Valve Box.
EO-19241-D: Base for .75 NPS through 2 NPS Plastic Valves and 1.5 NPS and 2 NPS Steel Valves Used on Gas Mains and Services.
EO-3942-C3: Wood Plugs for Use with Cast Iron and Steel Pipes Street Valve Box.
EO-4019-C: Street Valve Box.
EO-4044-C: Cast Iron Curb Valve Box 2 ft. Extension – Type CV24
EO-4045-C: Cast Iron Curb Valve Box 2 ft. 8 inch Extension – Type CV32
EO-5102-D: Precast Concrete Base for Street Valve Box.
EO-5261-C: High Hats for Plugs and Nipples on 6" NPS through 30 "NPS Steel
EO-5315-D: Bed Blocks and Wedges for Laying Gas Pipe.
EO-6799-C: Protective Covers for Gas Main Installations.
EO-14134-C: Thermit Weld Process for Attaching Wire to Pipe or Fittings.
EO-14620-C: Segmenting Long Radius Forged Elbows.
EO-13911-B: Installation of 6" NPS through 30" NPS Weld End Ball Valve and Valve Box for High Pressure Gas Mains.

EO-16954-B: Sheeting for Trenches and Excavations.
EO-15636-C: Field Fabricated Extension for Gas Valve Installations over 4 feet of Cover.
502664: Installation of Electronic Markers on Gas Mains & Services Pressure Testing Requirements for New and Replacement.

JB 616 - INSTALLATION OF PLASTIC GAS PIPE FITTING

A. Description

Under this section, the Contractor shall provide all labor, materials, equipment, insurance and incidentals required to install plastic gas pipe fittings and service pipe fitting connections within the Consolidated Edison service territory. The Contractor shall satisfactorily clean, test and install new plastic gas pipe fittings, tracer wire, tracer wire termination boxes and appurtenances, complete as specified herein and as indicated on the contract drawings / layouts in accordance with the specifications of Con Edison Gas Engineering and as directed by the authorized Con Edison representative. All work shall be performed in accordance with Con Edison Requirements, standard drawings and specifications referenced herein.

The Contractor shall install new Gas Utility Facility Fittings and appurtenances including but not limited to:

1. Non Cost Sharing Gas Facilities
2. Plastic Pipes
3. Phenolic Board
4. Foam Board
5. Adjustable & Non Adjustable Valve Box Risers
6. Pipe Coatings Refer to Con Edison Specification G-8209
7. Molded Fittings
8. Plastic Valves

The trench to be excavated shall be determined by the size of the Gas facility to be installed, extended or modified. The work shall be performed in accordance with all applicable specifications, and / or at the direction of the facility operator in consultation with the Resident Engineer and paid under other contract bid items.

B. Materials

All materials will be provided by Con Edison unless specifically noted otherwise. All materials provided by Con Edison will be delivered to the Contractor at the construction site and unloaded by the Contractor.

C. Methods of Construction

The Contractor shall install the plastic gas pipe fitting(s), (including but not limited to valves, elbows, weld end caps and tees) as shown on layouts and or drawings and sketches and as directed by the facility operator from designated facility operator service points and in accordance with the contract plans and Con Edison Standard specifications. The method of construction shall include all labor, equipment and materials that are necessary to complete the installation of the plastic gas pipe fitting(s) including miter cut, joining the pipe by fusing, and appurtenances complete, and testing operations. The Contractor shall thoroughly clean each pipe length and fitting in order to remove all internal dirt and foreign matter prior to the pipe being lowered into the trench. The installation of the

new pipe must be performed by Operator Qualified mechanics. The Contractor must be approved by Con Edison.

FITTINGS:

Plastic Valves

Plastic valves are approved up to and including 16" diameter. Where the same diameter valve comes in reduced port and full port openings, a full port valve shall be used (unless otherwise noted on a layout or requested by Gas Distribution Engineering).

Plastic Molded Fittings

Plastic molded fittings (caps, elbows, reducers, tees and valves) can only be joined to plastic pipe or other molded fittings by butt fusion or electrofusion. Plastic molded fittings can never be joined to plastic pipe or other molded fittings by mechanical fittings.
See Spec G-8005.

A **'WARNING BURIED GAS LINES BELOW'** tape (class and stock number 024-6660) must be installed at a **minimum** of 12 inches above the top of the direct buried new / replacement main. When new / replacement mains are inserted, the tape is to be installed above all exposed pipe in tie-in and service excavations.

Protection Plates shall be A36 steel 3/8" thick, provided by Con Edison.

Pressure Testing Inerting:

The newly completed gas pipe shall be subjected to a combination strength-proof and leakage test by the Contractor in accordance with G-8204

The Contractor shall furnish all material, transportation and equipment, including gas and air necessary to perform and complete the pressure testing and inerting operations, including the equipment used to record the test. Inerting shall be defined as the process of displacing air or natural gas in a facility with an inert gas.

D. Method of Measurement

The quantity to be paid for under this item shall be the actual number of each (EA) plastic gas pipe fitting installed for each pipe size. The various types of pipe sizes are defined as follows:

JB 616.1A - Installation of Plastic Gas Pipe Fitting - ½" Diameter
JB 616.1 - Installation of Plastic Gas Pipe Fitting - 1" Diameter
JB 616.1B - Installation of Plastic Gas Pipe Fitting - 1-1/4" Diameter
JB 616.1C - Installation of Plastic Gas Pipe Fitting - 1-1/2" Diameter
JB 616.2 - Installation of Plastic Gas Pipe Fitting - 2" Diameter
JB 616.3 - Installation of Plastic Gas Pipe Fitting - 3" Diameter
JB 616.4 - Installation of Plastic Gas Pipe Fitting - 4" Diameter
JB 616.6 - Installation of Plastic Gas Pipe Fitting - 6" Diameter
JB 616.8 - Installation of Plastic Gas Pipe Fitting - 8" Diameter
JB 616.10 - Installation of Plastic Gas Pipe Fitting - 10" Diameter
JB 616.12 - Installation of Plastic Gas Pipe Fitting - 12" Diameter
JB 616.16 - Installation of Plastic Gas Pipe Fitting - 16" Diameter

E. Price to Cover

The unit price bid per each (EA) shall include the cost of all labor, equipment and materials not provided by Con Edison as necessary to completely install the plastic gas pipe fitting. The price per each (EA) plastic gas pipe fitting shall include pipe installation, (including but not limited to valves, elbows, weld end caps and tees), miter cut, joining by fusing, and all other work necessary to completely install the plastic gas pipe fitting, and testing and inerting operations. Other work such as pavement saw-cutting, trench excavation, temporary timber sheeting, and backfilling with granular materials, compacting, valve installation, protection plates and pavement / curb restoration shall be paid for separately under the appropriate contract bid items.

F. References

The following Con Edison Standards apply to all materials:

1. *Specifications:*

G-100,285:	Compression End Couplings, Tees, Elbows, Line Caps and Riser Tees for Gas pipe and Tubing.
G-100,281:	Weld End Forged Fittings For Gas Piping
SPEC. 900:	Installing Gas Mains, Regulator Stations and Services in New York City and Westchester County.
G-699:	Installation of Gas Services Regulators Vent Line Protectors.
G-1064:	Shielded Metal Arc Welding Procedure for Welding Steel Pipe and Fittings.
G-1065:	Qualification of Welders and Welding Procedures.
G-1066:	Qualification of Radiographers and Radiographic Procedures.
G-1070:	Radiographic Inspection of Pipeline Welds.
G-8003:	Transportation, Handling and Storage of Steel Pipe for Gas Mains & Services.
G-8005:	General Specification for the Installation of Gas Distribution Mains.
G-8005:	Plastic Pipe Main Installations Section 6.0.
G-8062:	Extruded Polyolefin Coating on Steel Gas Pipe.
G-8100:	General Specification for the Installation of Gas Services.
G-8129:	Purging Gas Mains, Services and Regulator Stations.
G-8153:	Reinforcing Compression Fittings
G-8194:	Street Opening Color Coding, Permit Signs at Worksite and Pavement Restoration Markers.
G-8195:	Qualification of Contractors' Maintenance Engineers and Field Supervisors Engaged in Gas Maintenance / Installations of Mains and/or services.
G-8201:	Electric Spark Inspection of Coating on Steel pipe.
G-8204:	Gas Mains and Services
G-8205:	Corrosion Control of Steel Gas Distribution Mains and Services.
G-8209:	Field Coatings of Steel Pipe and Fittings Installed Underground and in Subsurface Structures.
G-8217:	Regulator Vent Line Protectors

2. *Drawings:*

EO-4067-G: Precast Concrete Cover for Curb Valve Box in Sidewalk.
EO-4070-C: Cover for Curb Valve Box Located in the Street.
EO-13987-B: Temporary Locking Device for Cast Iron Curb Gas Valve Box.
EO-19241-D: Base for .75 NPS through 2 NPS Plastic Valves and 1.5 NPS and 2 NPS Steel Valves Used on Gas Mains and Services.
EO-3942-C3: Wood Plugs for Use with Cast Iron and Steel Pipes Street Valve Box.
EO-4019-C: Street Valve Box.
EO-4044-C: Cast Iron Curb Valve Box 2 ft. Extension – Type CV24
EO-4045-C: Cast Iron Curb Valve Box 2 ft. 8 inch Extension – Type CV32
EO-5102-D: Precast Concrete Base for Street Valve Box.
EO-5261-C: High Hats for Plugs and Nipples on 6" NPS through 30 "NPS Steel
EO-5315-D: Bed Blocks and Wedges for Laying Gas Pipe.
EO-6799-C: Protective Covers for Gas Main Installations.
EO-14134-C: Thermit Weld Process for Attaching Wire to Pipe or Fittings.
EO-14620-C: Segmenting Long Radius Forged Elbows.
EO-13911-B: Installation of 6" NPS through 30" NPS Weld End Ball Valve and Valve Box for High Pressure Gas Mains.
EO-16954-B: Sheeting for Trenches and Excavations.
EO-15636-C: Field Fabricated Extension for Gas Valve Installations over 4 feet of Cover.
502664: Installation of Electronic Markers on Gas Mains & Services Pressure Testing Requirements for New and Replacement.

JB 620 - INSTALLATION OF STEAM PIPE

A. Description

Under this section, the Contractor shall provide all labor, materials, equipment, insurance and incidentals required to install steam pipes and service connections. The Contractor shall satisfactorily clean and test install new steam pipes, and steam pipe insulation and steam housing and appurtenances, complete as specified herein and as indicated on the contract drawings / layouts and in accordance with the specifications and directions of the authorized Con Edison field representative in consultation with Con Edison Steam Engineering. All work shall be performed in accordance with Con Edison Requirements, standard drawings and specifications referenced herein.

B. Materials

All materials will be provided by Con Edison unless specifically noted otherwise. All materials provided by Con Edison will be delivered to the Contractor at the construction site and unloaded by the Contractor.

Pipe:
All piping shall conform to Piping Design Criteria for The Steam Distribution System Volume 1 prepared by ABS Consulting Section 4.0 for the Consolidated Edison Company and Con Edison Specifications S-9035-9, S-9036-10 and S-9040-4.

C. Methods of Construction:

The Contractor shall install the steam pipe(s), as shown on layouts and or drawings and sketches and as directed by the facility operator from designated facility operator service points and in accordance with the contract plans and Con Edison Standard specifications. The method of construction shall include all labor, equipment and materials that are necessary to complete the installation of the steel steam pipe including cutting of the pipe, joining by welding, one (1) for each 40' random full length of pipe, coating of pipe, insulation installation, concrete housing installation and appurtenances complete, and testing operations.

D. Method of Measurement:

The quantity to be paid for under this item shall be the actual number of linear feet (LF) of pipe installed for each size, as measured along the center line of the pipe in its final position.

JB 620.1 Installation of Steam Pipe - 2" Diameter
JB 620.2 Installation of Steam Pipe - 3" Diameter
JB 620.3 Installation of Steam Pipe - 4" Diameter

JB 620.4 Installation of Steam Pipe - 6" Diameter
JB 620.5 Installation of Steam Pipe - 8" Diameter
JB 620.6 Installation of Steam Pipe - 10" Diameter
JB 620.7 Installation of Steam Pipe - 12" Diameter
JB 620.8 Installation of Steam Pipe - 14" Diameter
JB 620.9 Installation of Steam Pipe - 16" Diameter
JB 620.10 Installation of Steam Pipe - 18" Diameter
JB 620.11 Installation of Steam Pipe - 20" Diameter
JB 620.12 Installation of Steam Pipe - 24" Diameter
JB 620.13 Installation of Steam Pipe - 30" Diameter
JB 620.14 Installation of Steam Pipe - 36" Diameter

E. Price To Cover:

The unit price bid per linear feet (LF) of pipe shall include the cost of all labor, equipment and materials not provided by Con Edison as necessary to complete the work. The price per linear foot of steel steam pipe shall include pipe installation, cutting of pipe, joining by welding, one (1) for each 40' random full length of pipe, coating of pipe, insulation installation, concrete housing installation and appurtenances complete, and testing operations.

Other work such as pavement saw-cutting, trench excavation, temporary timber sheeting, and backfilling with granular materials, compacting, and pavement restoration shall be paid for separately under the appropriate contract item.

F. References:

1. Specifications

EO-11066:	F.C. Housing for Steam Mains 2" to 30"
EO-17029:	F.C. of Concrete Housing for 2", 3" & 4" Steam Services
EO-9382:	Inside & Outside Formwork for Concrete Housing for Steam Mains 2" – 30"
EO-17115:	Pipe Supports / Pedestal Supports – Engineering Orders:
EO-6874:	
EO-7412:	
EO-14936:	
EO-13250:	
EO-324786:	
EO-13167:	

Refer to ABS Consulting Specification Volume One Page 21 of 21 for a complete listing of technical specifications.

JB 621 - INSTALLATION OF STEAM PIPE FITTINGS

A. Description:

Under this section, the City Contractor shall provide all labor, materials, equipment, insurance and incidentals required to install steam pipe fittings and service connection fittings. The Contractor shall install new steam pipe fittings, insulation, encase steam pipe and fittings in concrete housing with waterproofing membrane and appurtenances, complete as specified herein and as indicated on the contract drawings/layouts and in accordance with the specifications and directions of the authorized Con Edison field representative in consultation with Con Edison Steam Engineering. All work shall be performed in accordance with Con Edison requirements, standard drawings and specifications referenced herein.

B. Materials:

All materials will be provided by Con Edison unless specifically noted otherwise. All materials provided by Con Edison will be delivered to the Contractor at the construction site and unloaded by the Contractor.

Pipe Fittings:

All piping shall conform to Consolidated Edison Company Specification S-9035-11, ASTM A-53 (entitled "Standard Specification for Pipe, Steel, Black and Hot-Dipped, Zinc-Coated, Welded and Seamless"), Grade B Type S (Seamless). Steam pipe fittings shall conform to the latest Con Edison Specification S-9040.

C. Methods of Construction:

The Contractor shall install the steam pipe fittings, including but not limited to valves, elbows, weld end caps and tees as shown on layouts and or drawings and sketches and as directed by the facility operator and in accordance with the contract plans and Con Edison Standard specifications and Engineering Orders (EO). The method of construction shall include all labor, equipment and materials that are necessary to complete the installation of the steam pipe fittings including miter cuts, weld(s), insulation, concrete housing with waterproofing membrane and appurtenances complete, and testing operations. All welds must be performed in accordance with Specification S-11944 and radiographically inspected as per specification G-1070. The elevation and line of the steam main may be changed to field conditions, and prior to any changes in the field must be reported to Steam Distribution Engineering for approval. In addition, the existing insulation may contain asbestos, and it should be handled and disposed in accordance with Con Edison's Corporate Asbestos Management Manual. An ACP-7 permit will need to be filed for any abatement work. All identified work shall be performed by a steam approved and qualified contractor.

D. Method of Measurement:

The quantity to be paid for under this item shall be the actual number of each (EA) pipe fitting installed for each size of pipe.

JB 621.1 Installation of Steam Pipe Fitting - 2" Diameter
JB 621.2 Installation of Steam Pipe Fitting - 3" Diameter
JB 621.3 Installation of Steam Pipe Fitting - 4" Diameter
JB 621.4 Installation of Steam Pipe Fitting - 6" Diameter
JB 621.5 Installation of Steam Pipe Fitting - 8" Diameter
JB 621.6 Installation of Steam Pipe Fitting - 10" Diameter
JB 621.7 Installation of Steam Pipe Fitting - 12" Diameter
JB 621.8 Installation of Steam Pipe Fitting - 14" Diameter
JB 621.9 Installation of Steam Pipe Fitting - 16" Diameter
JB 621.10 Installation of Steam Pipe Fitting - 18" Diameter
JB 621.11 Installation of Steam Pipe Fitting - 20" Diameter
JB 621.12 Installation of Steam Pipe Fitting - 24" Diameter
JB 621.13 Installation of Steam Pipe Fitting - 30" Diameter
JB 621.14 Installation of Steam Pipe Fitting - 36" Diameter

E. Price To Cover:

The unit price bid shall be the actual number of each (EA) pipe fitting installed for each size of pipe including the cost of all labor, equipment and materials (not provided by Con Edison) necessary to complete all associated installations identified in the project scoping document and as prescribed in the layout(s). The price per each steam fitting shall include the installation of the steam pipe fitting including miter cuts, weld(s), and pipe fittings, installing pipe insulation, encase all piping in concrete housing and appurtenances complete and testing operations.

Other work such as pavement saw-cutting, trench excavation, temporary timber sheeting, and backfilling with granular materials, compacting, and pavement restoration shall be paid for separately under the appropriate contract item.

F. References:

1. *Specifications*

S-9035: Steel Pipe for Steam Mains and Services for 200 psig Distribution System
S-9040: Steel Socket or Butt Welded Fittings for Use in the 200 and 400 psig Steam Distribution Systems
S-11924: Procedure for Removal of Housing and Asbestos Insulation from Buried Steam Main
S-9057: Thermal Insulation for Field-Fabricated Pipe and Fittings on Underground Steam Mains and Services
S-12004: Procedures for installing waterproofing membranes for steam manhole and housing in the tidal area
G-1070

JB 625 - INSTALLATION OF STEAM EQUIPMENT

A. Description:

Under this section, the City Contractor shall provide all labor, materials, equipment, insurance and incidentals required to install steam equipment, concrete housing with waterproofing membrane and ancillary piping systems to existing or new Con Edison Company facilities. The Contractor shall satisfactorily install and hydrostatically test steam equipment as required in accordance with the specifications and directions of Con Edison Steam Engineering in consultation with the Con Edison field representative. All work shall be performed in accordance with Con Edison Requirements, standard drawings and specifications referenced herein. The steam equipment to be installed shall include but not be limited to:

1. Cooling Chamber Assembly
2. Trap Assembly
3. Drain Assembly
4. Valve Assembly
5. Anchor
6. Manhole
7. Service Valve box
8. Sewer connection

B. Material:

All materials will be provided by Con Edison unless specifically noted otherwise. All materials provided by Con Edison will be delivered to the Contractor at the construction site and unloaded by the Contractor. Materials supplied by the contractor and utilized in the construction of the steam cooling chamber shall be in accordance with Con Edison standard specifications and applicable Engineering Orders.

C. Method of Construction:

The Contractor shall install the steam assembly equipment and concrete housing, (including but not limited to bolts, water seals, tees, flanges, gaskets, trap valves, blow-off valves, sleeves, reducers, caps, and plates). All work shall comply with the specifications, plans, layouts, and standards of the facility operator. All work shall be performed in accordance with Con Edison standard specifications and applicable Engineering Orders. No traffic shall be allowed on modified structures until permitted by the facility operator. All welds must be performed in accordance with Specification S-11944 and radiographically inspected with Specification G-1070. The elevation and line of the steam main may be changed to field conditions, and prior to any changes in the field must be reported to Steam Distribution Engineering for approval. In addition, the existing insulation may contain asbestos, and it should be handled and disposed in accordance with Con Edison's Corporate Asbestos Management Manual. An ACP-7 permit will need to be filed for any abatement work. All identified work shall be performed by steam approved and qualified contractor.

D. Method of Measurement:

The quantity to be measured shall be for each (EA) steam assembly installed complete.

JB 625A – Installation of Steam Cooling Chamber Assembly
JB 625B – Installation of Steam Trap Assembly
JB 625C – Installation of Steam Drain assembly
JB 625D – Installation of Steam Valve Assembly
JB 625E – Installation of Steam Anchor
JB 625F – Installation of Steam Manhole
JB 625G – Installation of Steam Service Valve Box
JB 625H – Installation of Steam Sewer Connection

E. Price To Cover:

The unit price bid for each (EA) steam assembly item installed shall cover the cost of all labor, material, equipment, insurance, and incidentals necessary to completely install the steam assembly equipment and concrete housing with waterproofing membrane (including but not limited to bolts, water seals, tees, flanges, gaskets, trap valves, sleeves, blow-off valves, reducers, caps, and plates). The unit price shall cover the cost associated with the maintenance and protection of traffic and incidentals required to construct the steam assembly. All work shall comply with the plans, layouts, specifications, standards, and directions of the facility operator.

The installation of steam manholes and boxes shall be paid for separately under other appropriate contract bid item.

F. References:

1. **Specifications:**

S-11944: Shielded Metal Arc Welding of Steel Pipe and Fittings
S-9035: Steel Pipe for Steam Mains and Services for 200 psig Distribution System
EO-16498: Field Constructed Steam Service Valve Enclosures Type SV3-2
S-9057: Thermal Insulation for Field-Fabricated Pipe and Fittings on Underground Steam Mains and Services
EO-8935: Heat Deflecting Slab Installation Steam Mains
S-9040: Steel Socket or Butt Welded Fittings for Use in the 200 and 400 psig Steam Distribution Systems
EO-15389 Field Constructed Slab Anchors for 6"- 30" 200 & 400 psig Steam Mains
EO-17025 Concrete Slabs Over Steam Facilities Located in Roadway or Sidewalk
EO-7412: Cast Iron Saddle Box and Roller for 6"- 30" Steam Main
EO-15066: Sliding Support for 6"- 30" Steam Main in Concrete Housing
S-11924 Procedure for Removal of Housing and Asbestos Insulation from Buried Steam Main
EO-9367: Prefabricated Steam Mains 13' to 41' Length 6" to 30" Dia. 200 PSIG
S-12004: Procedures for installation waterproofing membranes for steam manhole and housing in the tidal area
EO-17155: Field construction of steam manholes with stainless steel rebar

EO-11065: Installation of steam condensate drain and cooling chamber
EO-17130: Condensate discharge connection to sewer
EO-17131: Direct connection to sewer (for sewer cover less than 13ft)
EO-17132: Riser connection to sewer
EO-6874-D: Cast iron guide for steam mains
EO-17055: Thrust guide on saddle box and roller for new and existing 6" – 30" steam mains
EO-6902: 10" Cooling chambers for steam mains
EO-13167: Concrete piers for supporting steam mains crossing sewers or water mains

JB 636E - ADJUSTMENT OF UTILITY HARDWARE

Under this section the Contractor shall adjust existing utility street hardware including vault grates, valve boxes, etc., to the proposed grade by either building up or lowering the installation and resetting the castings, as and where directed by the facility operator.

A. Description

Building up or lowering the installation and resetting the castings shall consist of removing the existing frame and cover, building up or decreasing the existing installation, replacing the frame and/or cover if damaged, as determined by the facility operator, with a new frame and/or cover furnished by the facility operator, and setting the frame and cover to the new elevation.

B. Materials

Materials used shall comply with the Standards and specifications of the facility operator having jurisdiction over the installations. Where high-early strength concrete is required by the Resident Engineer to be placed adjacent to utility installations then the requirement for mortar shall be quick setting mortar capable of obtaining a minimum compressive strength of 1,500 psi in two (2) hours, and the requirement for concrete shall be high-early strength complying with current N.Y. State Department of Transportation, Standard Specifications for Class F concrete.

When castings and/or covers are deemed inadequate at a location as determined by the facility operator, the facility operators shall furnish new castings and/or covers to the Contractor for installation. The Contractor is required to inform the utility operator in advance of the need for the castings. Materials supplied by the facility operator shall be delivered to the contractor's designated storage area.

C. Methods of Construction

The Contractor shall breakout and dispose of sidewalk, curb, pavement and/or pavement base around existing casting, excavate as required to remove casting and install existing or replacement casting, remove casting, protect opening, reinstall existing casting or install new casting to the proposed grades, backfill, grade and compact fill around casting, install base concrete and or sidewalk pavement and curb, tack coat around frame, install and remove temporary pavement around casting where directed by the facility operator; and install and compact asphalt binder and wearing course or other permanent pavement around casting and perform all work in accordance with the contract plans and the specifications.

Setting or resetting the castings shall be done with bricks plus mortar and/or by raising or lowering adjustable castings according to the standards of the utility owner having jurisdiction over the installation. Work shall be done in a workmanlike manner. Any damage resulting from the Contractor's operations to the existing installation which is to remain shall be satisfactorily corrected at the Contractor's own expense, as directed by the facility operator. Castings, which are deemed unacceptable for resetting, shall become the property of the Contractor and shall be removed and disposed of by him away from the site.

No traffic shall be allowed on adjusted utility hardware until permitted by the facility operator.

D. Method of Measurement

The quantity to be measured for payment shall be the number of utility hardware units (EA) in each size group actually adjusted as specified under each item. The size of each utility hardware unit, measured in width, shall be defined as either, the diameter of the exposed edge of the casting, or the exposed edge of the longest side of rectangular frames as indicated in sketch JB 636.

For Castings in Roadway

JB 636 EA RD - Adjustment of Utility Hardware (Under 7" Width)

JB 636 EB RD - Adjustment of Utility Hardware (7" to under 14" Width)

JB 636 EC RD - Adjustment of Utility Hardware (14" to under 30" Width)

JB 636 ED RD - Adjustment of Utility Hardware (30" to under 34" Width)

JB 636 EE RD – Adjustment of Utility Hardware (34" to under 41" Width)

JB 636 EG RD - Adjustment of Utility Hardware (41" to under 75" Width)

JB 636 EH RD - Adjustment of Utility Hardware (75" to under 125" Width)

JB 636 EI RD - Adjustment of Utility Hardware (125" to under 170" Width)

For Castings in Sidewalk

JB 636 EA SW - Adjustment of Utility Hardware (Under 7" Width)

JB 636 EB SW - Adjustment of Utility Hardware (7" to under 14" Width)

JB 636 EC SW - Adjustment of Utility Hardware (14" to under 30" Width)

JB 636 ED SW - Adjustment of Utility Hardware (30" to under 34" Width)

JB 636 EE SW – Adjustment of Utility Hardware (34" to under 41" Width)

JB 636 EG SW - Adjustment of Utility Hardware (41" to under 75" Width)

JB 636 EH SW - Adjustment of Utility Hardware (75" to under 125" Width)

JB 636 EI SW - Adjustment of Utility Hardware (125" to under 170" Width)

E. Price to Cover

The price for re-grading utility hardware shall be the unit price per each (EA.) and shall cover the cost of furnishing all labor, materials, plant, equipment, and incidentals required to remove existing frames and covers; build up the existing installations with brick and mortar, or lower the existing installations by removing bricks and mortar; replace damaged frames and/or covers with frames and/or covers furnished by others; break out pavement and/or pavement base; protect existing opening and installation; set the frames and covers to new elevations; grade and compact fill; install base concrete; tack coat frame; install, remove, and dispose temporary pavement; install and compact asphalt binder and wearing course or other permanent pavement; repair minor structural damage to existing installations prior to resetting frames; unloading of furnished castings at the Contractor's yard and transporting castings from the Contractor's yard to the job site as required; and complete the work in accordance with the plans, the specifications, and the directions of the facility operator.

F. References

1. NYS DOT Standard Specs for Class F Concrete
2. Con Edison Specifications, latest revisions. EO-10321-B, latest revision – Chimneys, collars & grading blocks for manholes & vaults construction and installation
3. Sketch JB 636E

ROUND COVERS

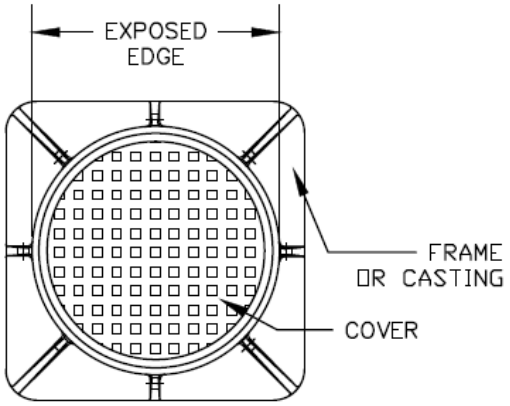

RECTANGULAR COVERS/FRAMES

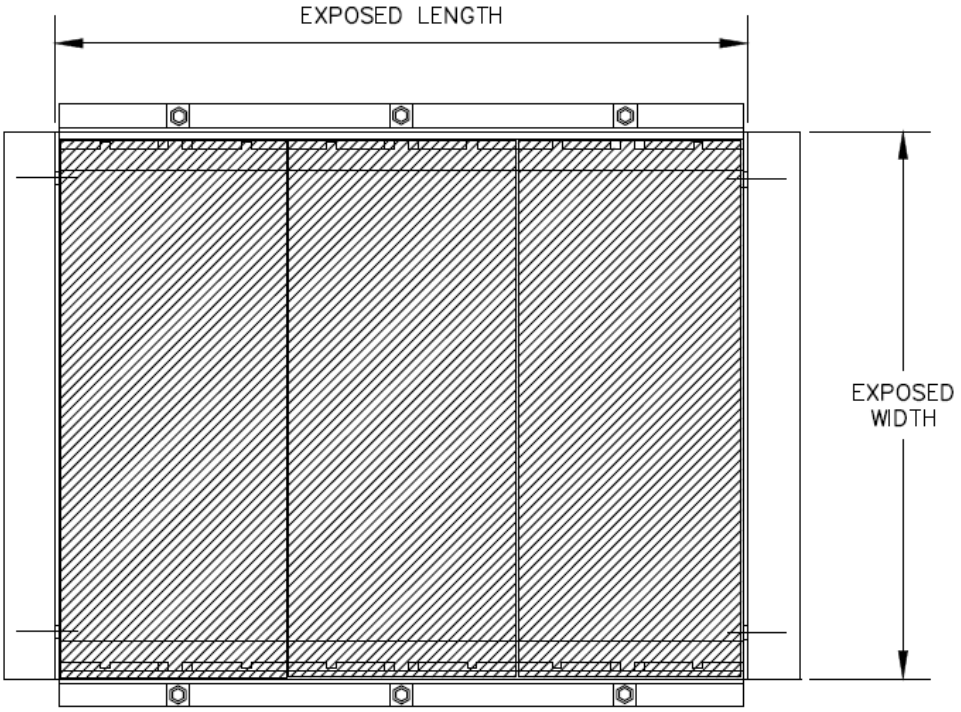

PLAN VIEW

N.T.S.

ADJUSTMENT OF
UTILITY HARDWARE

LAST REVISION	SKETCH NO.
6/30/2015	JB 636E

JB 636M – MODIFICATION OF WORK METHODS TO ACCOMMODATE UTILITY HARDWAREDURING PAVEMENT MILLING AND RESURFACING OPERATIONS

A. Description

Under this section, the Contractor shall provide all labor, materials, equipment, insurance, and incidentals required to maintain, protect, and accommodate the integrity of utility hardware during pavement milling and resurfacing operations. Hardware includes castings, frames, and covers on utility structures, valve box cover castings, concrete collars around steam castings, and all other hardware protecting utility facilities.

B. Materials – N/A

C. Method of Construction

Removal of existing pavement around utility hardware shall be performed by the Contractor with extreme caution by utilizing appropriate methods of operation, by employing specialized construction equipment, and by special operations and sequencing.

The Contractor shall not mill existing pavement within 12" of the perimeter of utility hardware. Removal of pavement within 12" of the perimeter of utility hardware shall be by cutting with pavement breakers or other methods as proposed by the Contractor. All methods shall be presented to the facility operator by the Contractor prior to the start of construction and shall be approved by the facility operator.

During removal of existing pavement and for the duration of project, the Contractor shall protect utility hardware from damage by the Contractor's operations and traffic. Contractor shall also provide all necessary protection to pedestrians to prevent injury to pedestrians when crossing utility hardware during the project. Utility street hardware damaged by the Contractor or others during the project shall be replaced by the Contractor at Contractor's expense.

The Contractor shall not place any paving materials over utility hardware during the project and shall maintain free and unobstructed access to all structures at all times. The Contractor shall maintain all covers free of debris and protect the covers, if necessary, from residue that results from the paving operation.

D. Method of Measurement

The quantity to be measured for payment shall be the number of utility hardware units (EA.) in each size group actually adjusted as specified under each item. The size of each utility hardware unit, measured in width, shall be defined as either, the diameter of the exposed edge of the casting, the exposed edge of elliptical castings measured along the major axis or the exposed edge of the longest side of rectangular frames as indicated in sketch JB 636E.

JB 636 MA – Modification of Work Methods to Accommodate Utility Hardware (Under 7" Width)

JB 636 MB – Modification of Work Methods to Accommodate Utility Hardware (7" to under 14" Width)

JB 636 MC – Modification of Work Methods to Accommodate Utility Hardware (14" to under 30" Width)

JB 636 MD – Modification of Work Methods to Accommodate Utility Hardware (30" to under 34" Width)

JB 636 ME – Modification of Work Methods to Accommodate Utility Hardware (34" to under 41" Width)

JB 636 MG – Modification of Work Methods to Accommodate Utility Hardware (41" to under 75" Width)

JB 636 MH – Modification of Work Methods to Accommodate Utility Hardware (75" to under 125" Width)

JB 636 MI – Modification of Work Methods to Accommodate Utility Hardware (125" to under 170" Width)

JB 636 SMB – Modification of Work Methods to Accommodate Utility Steam Hardware (Under and including 8" Width)

JB 636 SMC – Modification of Work Methods to Accommodate Utility Steam Hardware (Above 8" to 34" Width)

A. Price to Cover

The price to modify work methods to accommodate Utility Hardware during pavement milling and resurfacing operations shall include the cost of all incremental labor, materials, time, equipment, insurance and incidentals required for removal and disposal of existing pavement, installation and compaction of base and wearing course materials, installation and compaction and removal of temporary asphalt concrete mixture, tack coating; in accordance with the plans, the specifications and the directions of the facility operator. The price to cover shall further include the cost of maintaining, protecting, and accommodating the integrity of utility street hardware during the project and during the performance of milling and resurfacing and the incremental additional work and effort made necessary to protect pedestrians from injury when crossing utility hardware during the project. The price to cover shall further include additional areas of modification of work methods beyond 12" of the perimeter of the utility street hardware due to the milling equipment and the location of other utility hardware, city street hardware, utility poles, street lights, traffic signals, curbs, sidewalks, medians, guide rails, pavement stops, cobblestones, and pavers. The price to cover for Items JB 636 SMB and JB 636 SMC shall also include modification of work methods due to existing concrete collars surrounding these castings.

Payment for all work herein specified shall be made on a one-time basis only; no payment for work herein specified shall be made for the same area more than one time. Adjustment to utility hardware shall be paid for under the appropriate JB 636E item.

F. References

1. Sketch JB 636E
2. JB Item 636E

JB 636 RM - Rebuilding and Modifications to Utility Structures

A. Description

This section describes the work of performing the rebuilding of utility structures by rebuilding the existing structures using methods approved by the facility operator. This section also describes the work of performing modifications to utility structures to accommodate changes in roadway or sidewalk grades that cannot be accomplished by adjustment of frames and covers, as described by Section 636 E, in the judgment of the facility operator. The existing structures shall be modified using methods approved by the facility operator in consultation with the Resident Engineer.

Rebuilding and or modifications of utility structures, which include boxes, manholes, vaults and valve boxes; shall be as directed by the facility operator and for structures with a monolithic roof shall include:

- Removing the existing frame and cover, followed by
- Demolition of all or a portion of the walls, floor, and monolithic roof, followed by
- Rebuilding of all or a portion of the floor, followed by
- Rebuilding:
- A portion of the walls or
- A portion of the walls plus a vertical extension or
- All of the walls or
- All of the walls plus a vertical extension, followed by
- Rebuilding all or a portion of the monolithic roof or replacement with a non-monolithic roof.

Rebuilding and or modifications of utility structures, which include boxes, manholes, vaults and valve boxes; shall be as directed by the facility operator and for structures with a non-monolithic roof shall include:

- Removing the existing frame, cover, and roof slab, followed by
- Demolition of all or a portion of the walls and floor, followed by
- Rebuilding:
- A portion of the walls or
- A portion of the walls plus a vertical extension or
- All of the walls or
- All of the walls plus a vertical extension, followed by
- Installation of the existing roof slab or a new non-monolithic roof slab.

B. Materials

All materials used shall comply with the standards of the facility operator. The Contractor shall obtain pre-cast roofs that are available from a facility operator's vendor from that vendor.

C. Method of Construction

All work shall comply with the specifications, plans, and standards of the facility operator.

The Contractor shall perform the necessary rebuilding of the floor, walls, and roof of the existing utility structure as directed by the facility operator. New roof slabs shall be monolithic or non-monolithic as directed by the facility operator. New non-monolithic roofs shall be removable and cast on site or pre-cast as directed by the facility operator. No traffic shall be allowed on modified structures until permitted by the facility operator.

The Contractor shall perform the necessary modifications to the walls and roof of the existing utility structure to accommodate changes in roadway or sidewalk grades that cannot be accomplished by the adjustment of frames and covers as directed by the facility operator. New roof slabs shall monolithic or non-monolithic as directed by the facility operator. New non-monolithic roofs shall be removable and cast on site or pre- cast as directed by the facility operator. No traffic shall be allowed on modified structures until permitted by the facility operator.

Adjusting existing or new frames and covers shall be as described in JB 636E.

All work shall be done in a workmanlike manner and any damage resulting from the Contractor's operations shall be satisfactorily corrected as directed by the facility operator and at the Contractor's expense.

D. Method of Measurement

The quantity to be measured for payment shall be the number of cubic yards (CY) of concrete, pre-cast concrete, brick, and mortar in place to the nearest hundredth of a cubic yard. No deductions will be made for the spaces occupied by steel reinforcement.

E. Price to Cover

The contract price bid under this item shall be a unit price per cubic yard (CY) of concrete, pre-cast concrete, brick, and mortar placed in the utility structure. The unit price shall cover the cost of all labor, materials, plant, equipment, insurance and incidentals required to rebuild or modify privately owned utility structures, including all pavement breaking, pavement removal and disposal, excavation, haul away, and disposal, furnish and install and compact backfill, sheeting and bracing, removing of frames and covers. The price shall also include demolition of the private utility structure, haul away and disposal of demolished materials, formwork, installation of concrete, bricks, mortar, steel reinforcement, structural steel beams, furnish and install pre-cast roofs, removal and installation of interior hardware, support and protection of all utility facilities within the excavation and structure, and the furnishing of samples, as required. All work shall comply with the plans, specifications, standards, and directions of the facility operator. Resetting of new or existing street hardware shall be paid under JB 636E.

F. References

1. JB 636E

JB 638NT – FIELD CONSTRUCTED TELECOMMUNICATIONS MANHOLE STRUCTURES

Under this item the Contractor shall perform the complete installation of field constructed utility structures approved by the facility operator in consultation with the Resident Engineer. The utility structure shall be field constructed and installed in compliance with standard utility specifications and/or methods approved by the facility operator in consultation with the Resident Engineer.

A. Description

Installation of field constructed utility structure shall comply with utility standard specifications and/or as directed by the facility operator in consultation with the Resident Engineer and shall include:

- Service Boxes (various sizes)
- Manholes (various sizes)

Where approved by the facility operator, telephone structures may as an alternate be constructed of precast reinforced concrete.

B. Materials

The facility operator will furnish cable racks, pulling-in irons, sump castings, hardware, manhole steps/ladder supports and cast iron frames and covers. All other materials required for a complete manhole installation including concrete, reinforcing steel and structural steel shall be supplied by the Contractor and shall comply with the standards of the facility operator.

The Contractor shall notify the facility operator a minimum of 30 days prior to manhole construction for scheduling materials to be furnished by the utility company. The Contractor shall pick up said materials at the facility operator's yard.

All concrete shall have a minimum compressive strength of 4,000 psi at 28 days.

Reinforcing steel shall be deformed bars conforming to ASTM, Grade 60.

Structural steel shall conform to the requirements of ASTM A-36. Bolts shall conform with the requirements of ASTM A-325.

The Contractor shall supply all necessary materials (mortar, concrete, brick, etc.) for sealing duct entrance windows in manholes and for constructing chimneys and bricking up castings to grade.

C. Method of Construction

All work shall comply with the utility specifications, plans, and standards of the facility operator.

Refer to specification JB 406 for excavation and sheeting requirements associated with telephone manhole construction. Where replacement manholes are indicated on the plans, the demolition

and removal of the existing manhole structure and the protection of existing cables and splices will be paid separately under JB 638R.

The Contractor shall perform the necessary field construction of the floor, walls, and roof of the utility structure as shown on the Plans and as directed by the facility operator in consultation with the Resident Engineer. No traffic shall be allowed on the structure until permitted by the facility operator in consultation with the Resident Engineer.

Field conditions may require the contractor to modify the design of the manhole structure, as directed by the facility operator in consultation with the Resident Engineer.

Refer to specification JB 636E for guidelines relating to the installation of new frames and covers.

All structural steel roof beams shall be ground free of burrs and painted with one shop coat and two field coats of finish paint. The Contractor shall make provisions for and incorporate into the manhole all required materials as shown on the Plans, standard utility details or as directed by the facility operator in consultation with the Resident Engineer.

The Contractor shall provide duct entry windows in the new manhole as shown on the Plans and as directed by the facility operator. All windows shall be properly sealed around new ducts per utility company requirements.

All cable racks and wall brackets shall be supported on walls with ½" dia. X 2-½" long galvanized steel machine bolts using ½" concrete inserts or expansion bolts. Vertical spacing of inserts shall not exceed 18" o.c. (typ).

The Contractor shall confirm placement of concrete inserts for cable rack supports, pulling-in irons, and other embedments shown on the Plans with the facility operator, in consultation with the Resident Engineer, prior to manhole construction.

All work shall be done in a workmanlike manner and any damage resulting from the Contractor's operations shall be satisfactorily corrected as directed by the facility operator in consultation with the Resident Engineer and at the Contractor's expense. The contractor shall perform the installation of the utility structure while maintaining, supporting, and protecting and accommodating the integrity of all utility facilities (without disruption of service) located within the areas of the excavation and the field constructed structure.

This item shall also apply when partially or totally rebuilding or modifying an existing utility structure.

The Contractor is advised that in lieu of poured-in-place structures the substitution of Precast Reinforced Concrete Structures that comply with Utility Specifications, will be permitted only when approved by the facility operator in consultation with the Resident Engineer, along with the following provisions:

1. Precast telephone manholes shall be constructed to the interior manhole dimensions and details shown on the Plans.

2. The Contractor shall submit shop drawings and design calculations for each precast manhole structure for review and approval by the facility operator and the Resident Engineer prior to fabrication. Shop drawings shall show the overall structure dimensions, roof openings, window sizes and locations, sump locations, reinforcing steel and details, construction joint types and locations including sealant material proposed. The inside face of all windows (4 sides) shall be beveled and provisions made for all inserts and hardware for a complete manhole installation, including cable pulling iron embedments and cable rack insert embedments in accordance with the standards and requirements of the facility operator.
3. Precast manhole design criteria shall be as follows:
    - Concrete Minimum Compressive Strength: 4,000 psi or greater at 28 days.
    - Steel Reinforcement: ASTM A-615, Grade 60.
    - Design Loading: AASHTO HS20-44
    - Shop drawings and calculations shall state design methodology used and all design assumptions including soil pressures and ground water levels used in the design.

4. A 9-inch thick compacted stone ballast leveling pad shall be provided as a foundation for all precast manholes.

D. Method of Measurement

The quantity to be measured for payment shall be the number of cubic yards (CY) of concrete, cast on site or pre-cast, as specified, concrete, brick, and mortar in place to the nearest hundredth of a cubic yard. No deductions will be made for the spaces occupied by steel reinforcement.

E. Price to Cover

The unit price under this item shall be a unit price per cubic yard (CY) of concrete, cast on site or pre-cast, as specified, concrete, brick, and mortar placed in the field constructed utility structure. The unit price shall cover the cost of all labor, materials, plant, equipment, insurance and incidentals required to field construct partially or totally, rebuild or modify, a utility structure. The unit price shall also include all formwork installation and removal, installation of concrete, bricks, mortar, steel reinforcement, structural steel beams, furnish and install pre-cast concrete, chimney, and installation of interior and exterior hardware, including frames and covers. The Contractor shall also install pipes, conduits, sumps, drains, sleeves, related steel or cast iron materials or equipment through the structures as shown on the drawings. Upon removal of forms, the Contractor shall remove debris and face off the entire interior of the structure. The unit price includes necessary realignment of existing ducts into the new structure up to five feet from the outside face of the new structure; any additional duct realignment required shall be paid under a separate JB item. The unit price shall further include the cost of maintaining, supporting, protecting and accommodating the integrity of all utility facilities (without disruption of service) during the work within the areas of excavation and the field constructed structure, and the furnishing of samples, as required. All work shall comply with the plans, specifications, standards, and directions of the facility operator in consultation with the Resident Engineer.

All pavement breaking, pavement removal and disposal, excavation, haul away, and disposal, furnish and install backfill, temporary pavement, sheeting, bracing, and all necessary incidentals shall be paid under item JB 406, only if required. All required break out and disposal of all types of conduits/duct banks in new structure area, including maintenance and support of cable shall be included in JB 638R. Where precast reinforced concrete manholes are used in lieu of poured in place manholes, the cost for furnishing, delivery and installation of the precast reinforced structures, additional excavation associated with the widening and deepening of trench due to increased width of precast structures and due to the placement of a stone ballast leveling pad; stone ballast; connections; and all work incidental thereto all in accordance with the Plans, Specification and Standards, shall be deemed included under this item. No additional or separate payments will be made for any work associated with the installation of precast reinforced structures.

The cost of providing an anti-freeze additive in concrete, when required, shall be paid for under Item 9.04 HW.

F. References

1. JB 406
2. JB 636E
3. JB 638R
4. Standard Utility Specifications and Drawings

JB 638R – BREAK OUT AND REMOVE UTILITY STRUCTURE CONTAINING ACTIVE FACILITIES

A. Description

Under this section the Contractor shall provide all labor, materials, equipment, insurance and incidentals necessary to partially or totally break out and remove existing utility structures using methods approved by the facility operator. Breaking out and removing existing utility structures shall be performed while maintaining and protecting all subsurface facilities, at locations approved by the Facility Operator. The Contractor will encounter various underground facilities, located both inside and outside the utility structure, while partially or totally breaking out and removing existing utility structures and will be required to excavate and perform work over, under, adjacent to, around, in between and in close proximity of various congested configurations of multiple facilities, conduits, pipes and cables.

All work required to partially or totally break out and remove existing utility structures shall comply with standard utility specifications and/or as directed by the facility operator and shall include but not be limited to:

- Service Boxes (various sizes)
- Manholes (various sizes)
- Vaults (various sizes)
- Valve Boxes (various sizes)
- Concrete encased conduits containing cables

B. Materials

All materials used shall be supplied by the Contractor and comply with the standards of the facility operator.

C. Method of Construction

The Contractor shall perform the necessary breaking out and removal of the existing utility structure while maintaining and protecting all subsurface facilities. The Contractor will encounter various underground facilities located both inside and outside the utility structure, while partially or totally breaking out and removing existing utility structures and will be required to excavate and perform work over, under, adjacent to, around, in between and in close proximity of various congested configurations of multiple facilities, conduits, pipes and cables, as directed by the facility operator. All work shall be done in a workmanlike manner and any damage resulting from the Contractor's operations shall be satisfactorily corrected as directed by the facility operator and at the Contractor's expense.

This item shall also apply when partially or totally breaking out and removing an existing utility structure.

The rebuilding of the utility structure is covered under JB 638N AND 638NT.

D. Method of Measurement

The quantity to be measured for payment shall be the number of cubic yards (CY) of concrete, reinforced concrete, brick, and mortar of the existing utility structure broken out, removed and disposed to the nearest hundredth of a cubic yard. No deductions will be made for the spaces occupied by steel reinforcement.

E. Price to Cover

The unit price bid under this item shall be a unit price per cubic yard (CY) of concrete, reinforced concrete, brick, and mortar of the existing utility structure broken out, removed and disposed. The unit price shall also cover the cost of all labor, materials, plant, equipment, insurance, and incidentals required to partially or totally break out, remove and dispose of existing utility structure. The unit price shall also include demolition of the existing utility structure, haul away and disposal of demolished materials, formwork, concrete, bricks, mortar, steel reinforcement, structural steel beams, interior hardware, exterior hardware, including frames and covers. The unit price shall further include the cost of maintaining, supporting, protecting and accommodating the integrity of all utility facilities (without disruption of service) during the work within the areas of excavation and the existing structure. All work shall comply with the plans, specifications and standards, provided by and at the directions of the facility operator.

The unit price shall include providing access to the facility operator tenants to verify and test cables before, during and after breaking out and removal of the utility and after conduit removal by the Contractor. The unit price shall include, but not limited to, opening and closing of fences; removal and replacement of temporary timber curb and opening and closing of traffic plates. Access to adjacent manholes impacted by the run is included in this item. JB 450 shall not be used in conjunction with JB 638R as JB 638R covers access to the work site at all times.

All pavement breaking, pavement removal and disposal, excavation, haul away, and disposal, furnish and install backfill, temporary pavement, sheeting, bracing, and all necessary incidentals shall be paid under item JB 406, only if required.

F. References

1. JB 406
2. JB 636E
3. JB 638R
4. Standard Utility Specifications and Drawings

JB 798 - MODIFICATION OF NON CONCRETE YOKE TROLLEY STRUCTURES REMOVAL WHEN CROSSING UTILITY FACILITES

A. Description

This JB item shall only be applied to trolley structure systems that do not contain concrete yoke foundations. This JB item shall only be used for trolley systems that have rails and wood ties only.

Under this section, the Contractor shall provide all incremental labor, equipment, insurance and incidentals required to maintain and protect and accommodate the integrity of utility facilities that include but are not limited to:

1. Conduits;
2. Conductors;
3. Concrete encased Conduit banks;
4. Steel Pipes; Steam Facilities;
5. Oil-o-static Facilities;
6. Non-cost Sharing Gas Facilities;
7. Steam Facilities;

of various sizes and configurations crossing trolley structures at various angles located within a zone of protection, as indicated on Sketch JB 798, during the removal of trolley structures and subsequent backfilling operations. Utility facilities that run parallel to trolley structures are not included within this item and will be paid for under the appropriate JB item. The work shall be performed in accordance with the contract plans, the specifications, and as encountered during construction and directed by the facility operator.

B. Materials – N/A

C. Method of Construction

The Contractor shall maintain, protect, and accommodate the integrity of all utility facilities of various sizes and configurations crossing trolley structures within a zone of protection as indicated in Sketch JB 798, during removal of trolley structures and subsequent backfilling and compaction operations under other contract item(s). The facility operator shall identify the locations of all utilities within the contract area as required by New York State Industrial Code Rule 753. As provided by the Rule, the Contractor shall use hand excavation methods (pick and shovel or hand held power tools) directly below the pavement base to expose the utility and ascertain the numerical relationships and/or dimensions of these utilities with respect to the proposed excavation. Contractor shall perform test pits at locations determined by the facility operator to expose utility as specified in JB 400. Upon exposing the affected utilities sufficiently, and at the sole discretion of the facility operator to determine relationships and/or dimensions, the Contractor shall be permitted to proceed with care to remove existing trolley structure within the zone of protection whose limit shall be defined as a distance of 24 inches from the outside face of each utility crossing.

D. Method of Measurement

The quantity to be measured for payment shall be the number of linear feet of modified trolley structure removal within the zone of protection as indicated on JB Sketch 798, measured along the centerline of trench. The trench is defined as one track set containing two rails. The zone of protection shall be defined, for the purpose of this agreement, as the boundary/area designated on the plans or a boundary/area 24 inches to either side of each of the designated facilities, based upon available records and/or information obtained from prior or new test pits, or any combination thereof. Where overlapping of the zones occurs due to multiple facilities, the boundary/area shall be modified to one zone measured from the outside limits. The contract item specified under this section shall not be measured for payment in conjunction with other types of utility items. Modifications to work methods required in areas between zones of protection for multiple utilities or JB facilities shall not be measured for payment and are included in the price bid for this item.

E. Price to Cover

The unit price per linear foot shall include the incremental cost for all labor, equipment, insurance and incidentals required to maintain and protect and accommodate the integrity of utility facilities during the removal of trolley structures (including rails, timber ties, trolley conduits and main conduit), and backfilling and compacting within a zoned area designated for protection of utilities by the facility operator.

The price shall include any additional cutting, removing and disposing of roadway materials; hand or machine excavation; trucking and disposing of excavated materials, installation and removal of sheeting; and furnishing, installing and compacting backfill that may be required to support, protect, maintain and accommodate the integrity of utility facilities. The price shall also include means to ascertain the numerical relationship between utility and the trolley structure and the incremental cost for providing all vehicular and pedestrian traffic maintenance necessary to perform the work.

The Contractor shall be responsible for any and all damages resulting from and/or due to trolley demolition operations that are not performed in accordance with the specifications.

When this work is performed within a mass excavation area, a credit will be taken for the removed trolley structure.

F. References

1. NYS Industrial Code Rule 753
2. Sketch JB 798

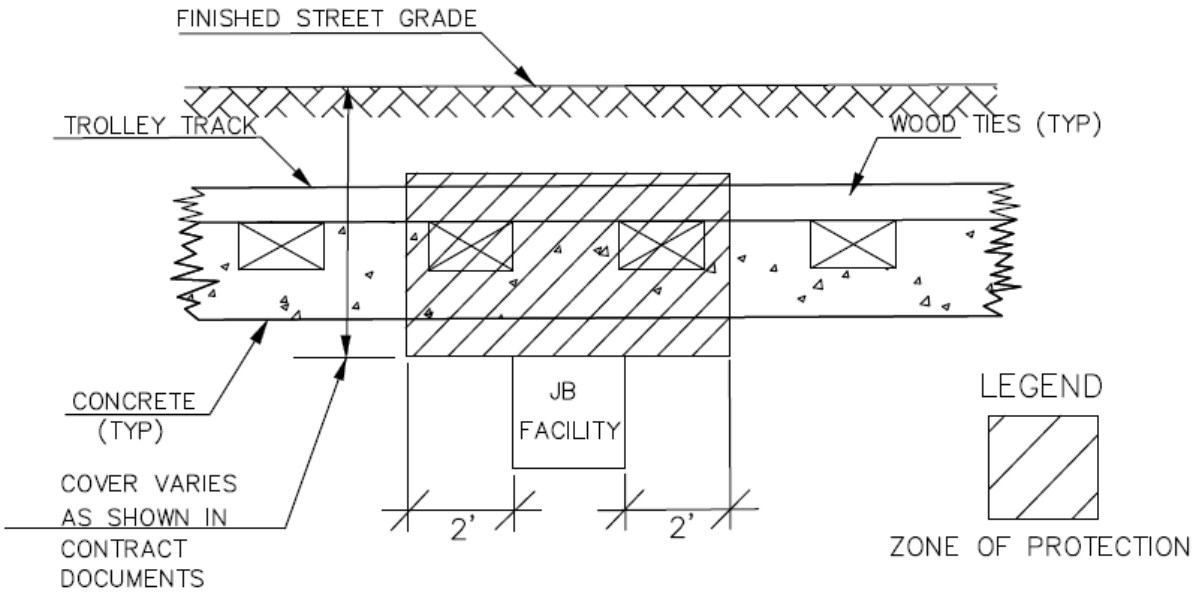

SECTION OF JB FACILITIES CROSSING TROLLEY TRACKS

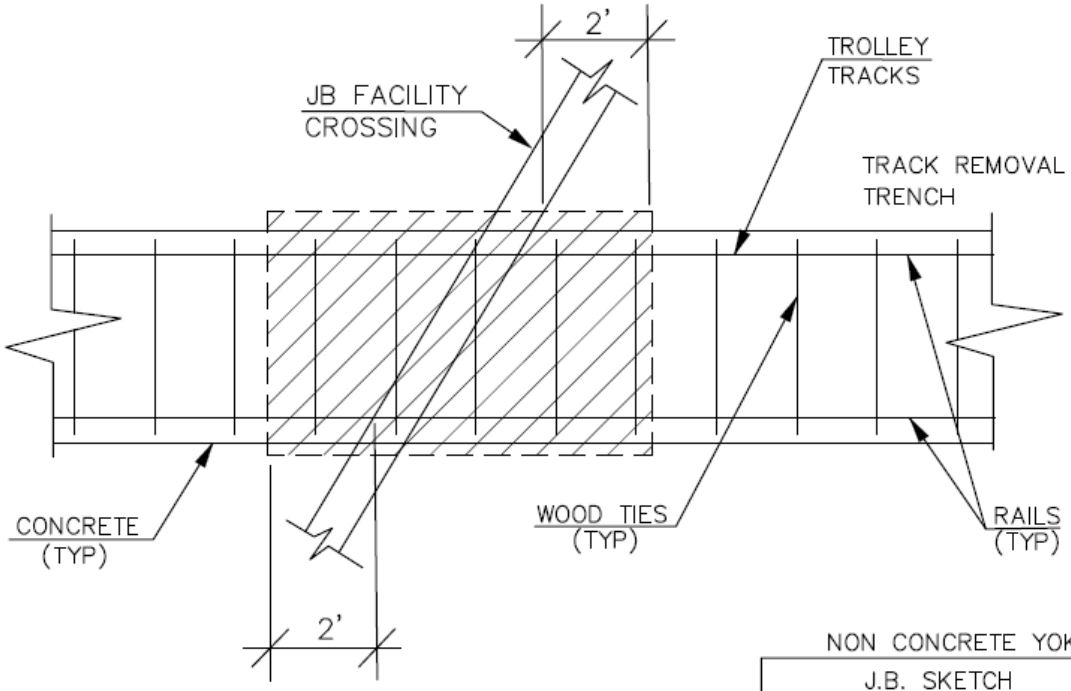

PLAN OF JB FACILITIES CROSSING TROLLEY TRACKS

NON CONCRETE YOKE

J.B. SKETCH

ACCOMODATION FACILITIES CROSSING TROLLEY RAILROAD STRUCTURES

REVISIONS	CONTRACT NO.	SKETCH NO.
11/28/2018		JB 798

JB 799 - MODIFICATION OF NON CONCRETE TROLLEY STRUCTURES REMOVAL PARALLEL TO UTILITY FACILITIES

A. Description

This JB item shall only be applied to trolley structure systems that do not contain concrete yoke foundations. This JB item shall only be used for trolley systems that have rails and wood ties only.

Under this section, the Contractor shall provide all incremental labor, equipment, insurance and incidentals required to maintain, protect, support and accommodate the integrity of utility facilities that include but are not limited to:

1. Conduits;
2. Conductors;
3. Concrete encased Conduit banks;
4. Steel Pipes; Steam Facilities;
5. Oil-o-static Facilities; and
6. Non-cost Sharing Gas Facilities;
7. Steam Facilities.

of various sizes and configurations paralleling or encroaching trolley structures located within a zone of protection, as indicated on the Plans or as directed by the field representative, during all trolley structure removal operations and subsequent backfilling operations. Utility facilities which cross over, under and between the trolley structures are not included within this item and will be paid for under the appropriate JB item. The work shall be performed in accordance with the contract plans, the specifications, and as encountered during construction and directed by the facility operator(s).

B. Materials – N/A

C. Method of Construction

The Contractor shall maintain, protect, support and accommodate the integrity of all utility facilities of various sizes and configurations paralleling or encroaching trolley structures within a zone of protection as indicated on the Plans or as directed by the field representative, during removal of trolley structures and subsequent backfilling and compaction operations under other contract item(s). The facility operator(s) shall identify the locations of all utilities within the contract area as required by New York State Industrial Code Rule 753. As provided by the Rule, the Contractor shall use hand excavation methods (pick and shovel or hand held power tools) directly below the pavement base to expose the utility and ascertain the numerical relationships and/or dimensions of these utilities with respect to the proposed excavation. Contractor shall perform test pits at locations determined by the facility operator to expose utility as specified in JB 400. Upon exposing the affected utilities sufficiently, and at the sole discretion of the facility operator(s) to determine relationships and/or dimensions, the Contractor shall be permitted to proceed with care to remove existing trolley structure within the zone of protection whose limit shall be defined as a distance of 24 inches from the outside face of each utility to the edge of the trolley structure.

D. Method of Measurement

The quantity to be measured for payment shall be the number of linear feet of modified trolley structure removal within the zone of protection as indicated on the plans, measured along the centerline of trench. The trench is defined as one track set containing two rails. The contract item specified under this section shall not be measured for payment in conjunction with other types of utility items. Modifications to work methods required in areas between zones of protection for multiple utilities or JB facilities shall not be measured for payment and are included in the price bid for this item.

E. Price to Cover

The unit price per linear foot shall include the incremental cost for all labor, equipment, insurance and incidentals required to maintain, protect, support and accommodate the integrity of utility facilities paralleling or encroaching trolley structures during the removal of trolley structures (including rails, timber ties, trolley conduits, and main conduits), and backfilling and compacting within a zoned area designated for protection of utilities by the facility operator(s).

The unit price shall also include any additional cutting, removing and disposing of roadway materials; hand or machine excavation; trucking and disposing of excavated materials, installation and removal of sheeting; and furnishing, installing and compacting backfill that may be required to support, protect, maintain and accommodate the integrity of utility facilities. The price shall also include means to ascertain the numerical relationship between utility and the trolley structure, and the incremental cost for providing all vehicular and pedestrian traffic maintenance necessary to perform the work.

The Contractor shall be responsible for any and all damages resulting from and/or due to trolley demolition operations that are not performed in accordance with the specifications.

When this work is performed within a mass excavation area, a credit will be taken for the removed trolley structure.

F. References

1. NYS Industrial Code Rule 753
2. Sketch JB 799

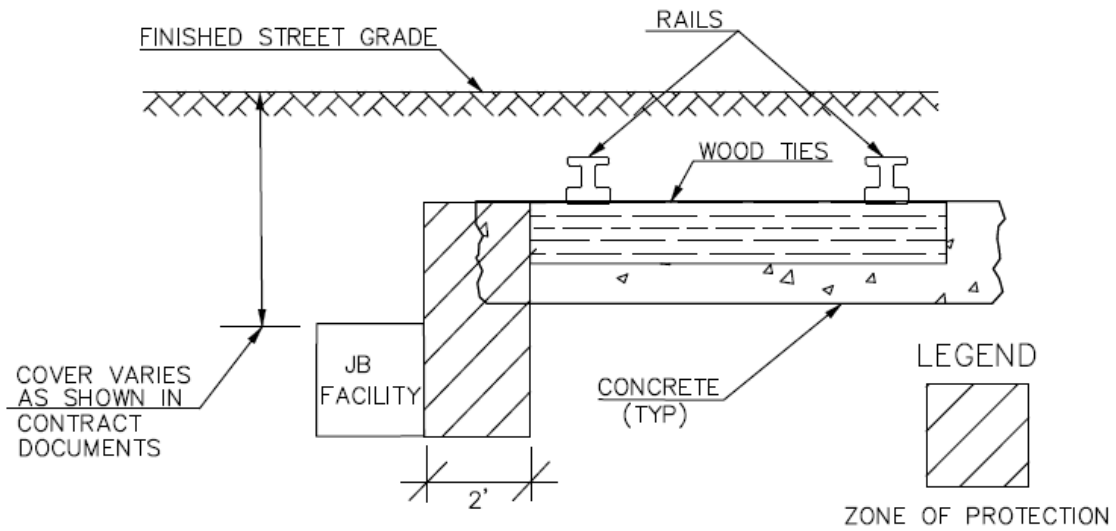

SECTION OF JB FACILITIES PARALLELING TROLLEY TRACKS

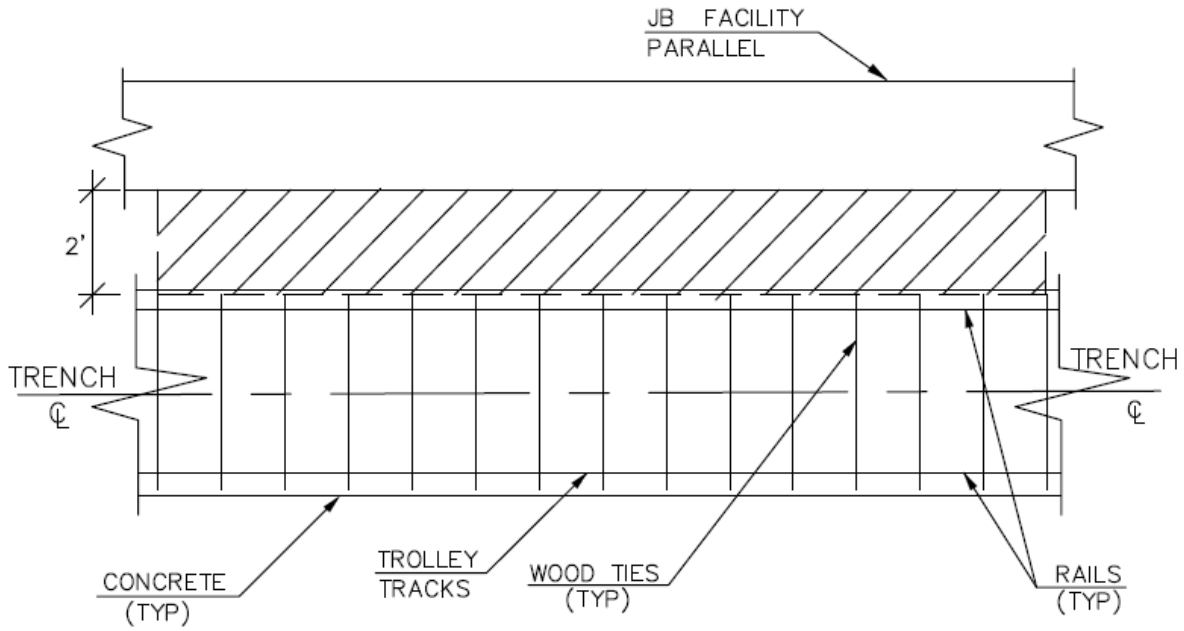

PLAN OF JB FACILITIES PARALLELING TROLLEY TRACKS

NON CONCRETE YOKE

J.B. SKETCH

ACCOMODATION FACILITIES PARALLEL TROLLEY RAILROAD STRUCTURES

REVISIONS	CONTRACT NO.	SKETCH NO.
11/28/2018		JB 799

JB 800 - MODIFICATION OF CONCRETE YOKE TROLLEY STRUCTURES REMOVAL WHEN CROSSING UTILITY FACILITES

A. Description

This JB item shall only be applied to trolley structure systems that contain concrete yoke foundations. This JB item shall not be used for trolley systems that have rails and wood ties only.

Under this section, the Contractor shall provide all incremental labor, equipment, insurance and incidentals required to maintain and protect and accommodate the integrity of utility facilities that include but are not limited to:

1. Conduits
2. Conductors
3. Concrete encased conduit banks
4. Steel pipes
5. Oil-o-static facilities
6. Non-cost Sharing Gas Facilities and
7. Steam Facilities

of various sizes and configurations crossing trolley structures at various angles located within a zone of protection, as indicated on Sketch JB 800, during the removal of trolley structures and subsequent backfilling operations. Utility facilities that run parallel to trolley structures are not included within this item and will be paid for under the appropriate JB item. The work shall be performed in accordance with the contract plans, the specifications, and as encountered during construction and directed by the facility operator.

B. Materials – N/A

C. Method of Construction

The Contractor shall maintain, protect, and accommodate the integrity of all utility facilities of various sizes and configurations crossing trolley structures within a zone of protection as indicated in Sketch JB 800, during removal of trolley structures and subsequent backfilling and compaction operations under other contract item(s). The facility operator shall identify the locations of all utilities within the contract area as required by New York State Industrial Code Rule 753. As provided by the Rule, the Contractor shall use hand excavation methods (pick and shovel or hand held power tools) directly below the pavement base to expose the utility and ascertain the numerical relationships and/or dimensions of these utilities with respect to the proposed excavation. Contractor shall perform test pits to expose the utilities as specified under JB 400. Upon exposing the affected utilities sufficiently, and at the sole discretion of the facility operator to determine relationships and/or dimensions, the Contractor shall be permitted to proceed with hand held power tools to remove existing trolley structure within the zone of protection whose limit shall be defined as a perimeter located 24 inches from the outside face of each utility crossing.

D. Method of Measurement

The quantity to be measured for payment shall be the number of linear feet of modified trolley structure removal within the zone of protection as indicated on JB Sketch 800, measured along the centerline of trench. The trench is defined as one track set containing two rails. The zone of protection shall be defined, for the purpose of this agreement, as the boundary/area designated on the plans or a boundary/area 3 feet to either side of each of the designated facilities, based upon available records and/or information obtained from prior or new test pits, or any combination thereof. Where overlapping of the zones occurs due to multiple facilities, the boundary/area shall be modified to one zone measured from the outside limits. The contract item specified under this section shall not be measured for payment in conjunction with other types of utility items. Modifications to work methods required in areas between zones of protection for multiple utilities or JB facilities shall not be measured for payment and are included in the price bid for this item.

E. Price to Cover

The unit price per linear foot shall include the incremental cost for all labor, equipment, insurance and incidentals required to maintain and protect and accommodate the integrity of utility facilities during the removal of trolley structures (including rails, timber ties, yokes, trolley conduits, main conduit, rail and yoke foundations), and backfilling and compacting within a zoned area designated for protection of utilities by the facility operator.

The unit price shall also include any additional cutting, removing and disposing of roadway materials; hand or machine excavation; trucking and disposing of excavated materials, installation and removal of sheeting; and furnishing, installing and compacting backfill that may be required to support, protect, maintain and accommodate the integrity of utility facilities. The unit price shall also include the incremental cost for providing all vehicular and pedestrian traffic maintenance necessary to perform the work.

The Contractor shall be responsible for any and all damages resulting from and/or due to trolley demolition operations that are not performed in accordance with the specifications.

When this work is performed within a mass excavation area, a credit will be taken for the removed trolley structure.

F. References

1. NYS Industrial Code Rule 753
2. Sketch JB 800

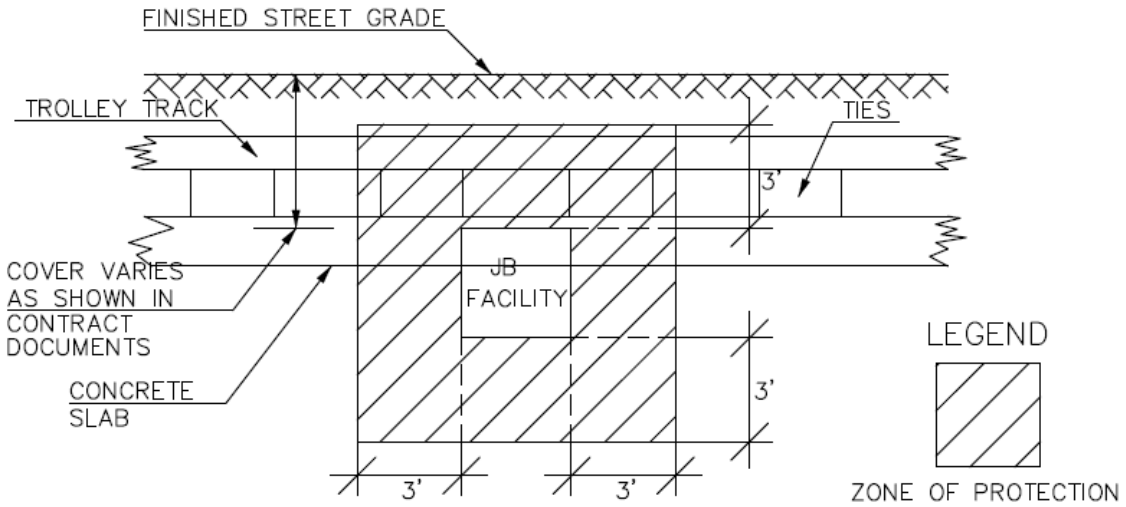

SECTION OF JB FACILITIES CROSSING TROLLEY TRACKS

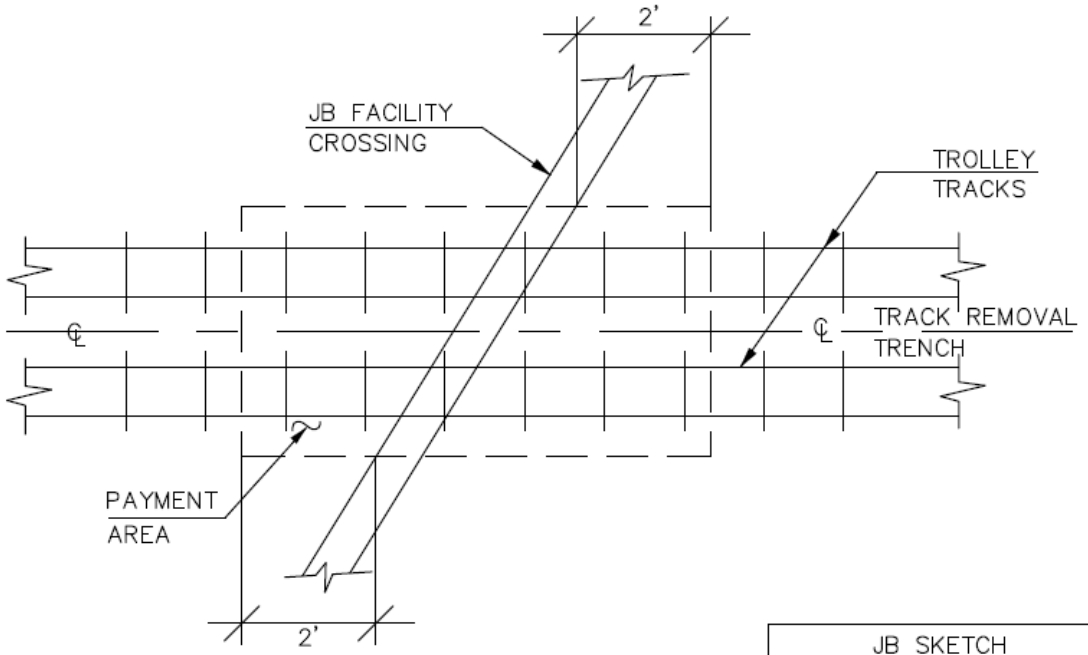

PLAN OF JB FACILITIES CROSSING TROLLEY TRACKS

JB SKETCH	
ACCOMODATION FACILITIES AT TROLLEY RAILROAD STRUCTURES	
REVISIONS	
11/28/2018	CONTRACT NO. / SKETCH NO. JB 800

JB 801 - MODIFICATION OF CONCRETE YOKE TROLLEY STRUCTURES REMOVAL PARALLEL TO UTILITY FACILITIES

A. Description

This JB item shall only be applied to trolley structure systems that contain concrete yoke foundations. This JB item shall not be used for trolley systems that have rails and wood ties only.

Under this section, the Contractor shall provide all incremental labor, equipment, insurance and incidentals required to maintain, protect, support and accommodate the integrity of utility facilities that include but are not limited to:

1. Conduits
2. Conductors
3. Concrete encased conduit banks
4. Steel pipes
5. Oil-o-static facilities
6. Non-cost sharing gas facilities and
7. Steam facilities

of various sizes and configurations paralleling or encroaching trolley structures located within a zone of protection, as indicated in sketch JB 801 or as directed by the field representative, during all trolley structure removal operations and subsequent backfilling operations. Utility facilities which cross over, under and between the trolley structures are not included within this item and will be paid for under the appropriate JB item. The work shall be performed in accordance with the contract plans, the specifications, and as encountered during construction and directed by the facility operator(s).

B. Materials – N/A

C. Method of Construction

The Contractor shall maintain, protect, support and accommodate the integrity of all utility facilities of various sizes and configurations paralleling or encroaching trolley structures within a zone of protection as indicated in sketch 801 or as directed by the field representative, during removal of trolley structures and subsequent backfilling and compaction operations under other contract item(s). The facility operator(s) shall identify the locations of all utilities within the contract area as required by New York State Industrial Code Rule 753. As provided by the Rule, the Contractor shall use hand excavation methods (pick and shovel or hand held power tools) directly below the pavement base to expose the utility and ascertain the numerical relationships and/or dimensions of these utilities with respect to the proposed excavation. Contractor shall perform test pits to expose the utilities as specified under JB 400. Upon exposing the affected utilities sufficiently, and at the sole discretion of the facility operator(s) to determine relationships and/or dimensions, the Contractor shall be permitted to proceed with hand held power tools to remove existing trolley structure within the zone of protection whose limit shall be defined as a perimeter located 24 inches from the outside face of each utility.

D. Method of Measurement

The quantity to be measured for payment shall be the number of linear feet of modified trolley structure removal within the zone of protection as indicated on the plans, measured along the centerline of trench. The trench is defined as one track set containing two rails. The contract item specified under this section shall not be measured for payment in conjunction with other types of utility items. Modifications to work methods required in areas between zones of protection for multiple utilities or JB facilities shall not be measured for payment and are included in the price bid for this item.

E. Price to Cover

The unit price per linear foot shall include the incremental cost for all labor, equipment, insurance and incidentals required to maintain, protect, support and accommodate the integrity of utility facilities paralleling or encroaching trolley structures during the removal of trolley structures (including rails, timber ties, yokes, trolley conduits, main conduit, rail and yoke foundations), and backfilling and compacting within a zoned area designated for protection of utilities by the facility operator(s).

The unit price shall also include any additional cutting, removing and disposing of roadway materials; hand or machine excavation; trucking and disposing of excavated materials, installation and removal of sheeting; and furnishing, installing and compacting backfill that may be required to support, protect, maintain and accommodate the integrity of utility facilities. The unit price shall also include the incremental cost for providing all vehicular and pedestrian traffic maintenance necessary to perform the work.

The Contractor shall be responsible for any and all damages resulting from and/or due to trolley demolition operations that are not performed in accordance with the specifications.

When this work is performed within a mass excavation area, a credit will be taken for the removed trolley structure.

F. References

1. NYS Industrial Code Rule 753
2. Sketch JB 801

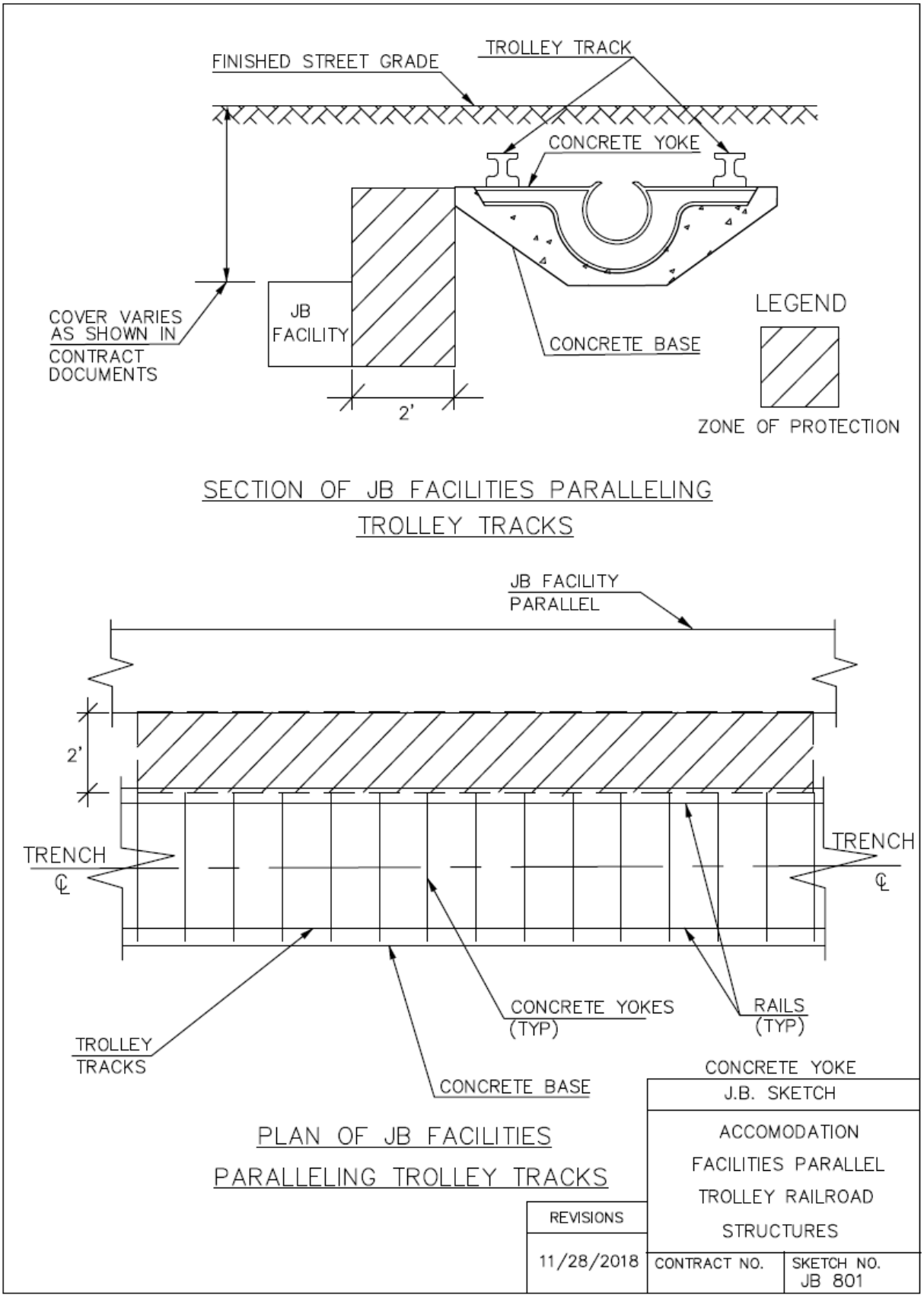
FINISHED STREET GRADE
TROLLEY TRACK
CONCRETE YOKE
COVER VARIES AS SHOWN IN CONTRACT DOCUMENTS
JB FACILITY
CONCRETE BASE
2'
LEGEND
ZONE OF PROTECTION
SECTION OF JB FACILITIES PARALLELING TROLLEY TRACKS
JB FACILITY PARALLEL
2'
TRENCH ℄
TRENCH ℄
TROLLEY TRACKS
CONCRETE YOKES (TYP)
RAILS (TYP)
CONCRETE BASE
PLAN OF JB FACILITIES PARALLELING TROLLEY TRACKS
CONCRETE YOKE
J.B. SKETCH
ACCOMODATION FACILITIES PARALLEL TROLLEY RAILROAD STRUCTURES
REVISIONS
11/28/2018
CONTRACT NO.
SKETCH NO.
JB 801

JB 803 - LINE CUT BY PNEUMATIC TOOLS IN LIEU OF SAW CUT ASSOCIATED WITH ROADWAY REMOVAL OPERATIONS

A. Description

Under this section, the Contractor shall provide all incremental labor, equipment, insurance and incidentals required to maintain, protect, support and accommodate the integrity of utility facilities that include but are not limited to oil o static facilities, and any other facilities of various sizes and configurations paralleling or crossing proposed saw cut areas located within a zone of protection associated with roadway removal operations, as determined by the utility operator. Utility facilities which cross under and between the saw cut area are included within this item. The work shall be performed in accordance with the contract plans, the specifications, and as encountered during construction and determined by the facility operator(s).

B. Materials – N/A

C. Method of Construction

The Contractor shall maintain, protect, support and accommodate the integrity of all utility facilities of various sizes and configurations paralleling or crossing the saw cut area within a zone of protection as determined by the Facility Operator, during the roadway saw cut. The facility operator(s) shall identify the locations of all utilities within the contract area as required by New York State Industrial Code Rule 753. As provided by the Rule, the Contractor shall use pneumatic tools to line cut the pavement in lieu of saw cut by machine. It is the sole discretion of the facility operator(s) to determine relationships and/or dimensions, and advise the Contractor to proceed with pneumatic tools to line cut existing roadway structure.

D. Method of Measurement

The quantity to be measured for payment shall be the number of linear feet of line cut performed by pneumatic tools measured along the length of cut. The contract item specified under this section shall not be measured for payment in conjunction with other types of utility items. Modifications to work methods required in areas between zones of protection for multiple utilities or JB facilities shall not be measured for payment and are included in the price bid for this item.

JB 803.1 Line cut Asphalt Roadway (LF)
JB 803.2 Line cut any combination of Asphalt and Concrete Roadway (LF)
JB 803.3 Line cut any combination of Asphalt, Concrete, and Belgium Block (LF)

E. Price to Cover

The unit price per linear foot shall include the incremental cost for all labor, equipment, insurance and incidentals required to maintain, protect, support and accommodate the integrity of utility facilities paralleling or crossing the saw cut area associated with the removal of roadway designated for protection of utilities by the facility operator(s).

The unit price shall also include any additional cutting, removing and disposing of roadway materials; and any backfill that may be required to support, protect, maintain and accommodate the integrity of utility facilities. The price shall also include the incremental cost for providing all vehicular and pedestrian traffic maintenance necessary to perform the work.

The Contractor shall be responsible for any and all damages resulting from and/or due to saw cutting operations that are not performed in accordance with the specifications.

F. References

1. NYS Industrial Code Rule 753

JB 850 (CUSTOM – HWMWTCA7E) - Placing Rubber Sheets for Utility Facilities

A. Description

Under this Section, the Contractor shall place permanent Rubber Sheets supplied by the facility operator(s) to protect utility facilities where directed by the facility operator(s) in consultation with the Resident Engineer.

B. Materials

Materials shall be supplied and delivered by the facility operator(s) at the job site or Construction Yard as directed by the Contractor.

C. Method of Construction

Rubber Sheets shall be placed in accordance with the attached facility operator(s) Specification for the Installation of High Pressure Pipe For 69, 138 and 345 kV Cable Systems, CE-TS-3352, under section 1.2.4.

D. Method of Measurement

The quantity for payment shall be the area of permanent rubber sheets installed and measured in Square Feet (S.F.). Each rubber sheet is typically 1/2" thick, 48" wide by 18' long.

E. Price to Cover

The unit price bid shall cover the cost of all labor, material, equipment, insurance, and incidentals necessary to complete the work.

F. References

1. Specification for the Installation of High Pressure Pipe For 69, 138 and 345 kV Cable Systems, CE-TS-3352.

PROJECT ID: SANDRESPC

JB 900 - EXTRA UTILITY WORK COSTS ALLOWANCE

A. Description - Use of contract Item JB-900 "Extra Utility Work Costs Allowance" - Fixed Sum

This item is applicable only for extra Utility Work. If the Utility determines that there is extra Utility Work for which there are no items in the Unit Price Book, then the Utility and City Contractor shall negotiate the cost of supporting and protecting and/or alleviating the impact on the Public Work caused by the extra Utility Work with each other with the understanding that the performance of Public Work shall continue during all negotiations and discussions.

(a) If the parties reach an agreement on cost for the extra Utility Work when there are no bid items available in the Unit Price Book, then the City Contractor and the Utility shall jointly submit to the City's Resident Engineer the agreed upon price along with all supporting documentation. The City Contractor shall be paid by requisitions submitted in accordance with the agreed upon price. All such extra utility work shall be totaled and the total shall be paid under Item JB 900.

(b) If the parties do not reach an agreement on the extra Utility Work within fifteen (15) Business Days from the start of negotiations, then the parties will resolve the dispute through the dispute resolution process, as set forth in Appendix "JB-A". During the arbitration process, the extra Utility Work will be performed and paid for based on the Utility's Final Offer, as set forth in Appendix JB-A.

(c) The total value of such method of payment shall be paid under Item JB 900.

B. Materials

All materials shall be supplied by the Contractor and approved by the facility operator in consultation with the Resident Engineer.

C. Method of Construction

As required.

D. Method of Measurement

No guarantee is given that this allowance item will in fact be required in this contract. The estimated "fixed sum" amount in the Bid Schedule is included in the total bid solely to ensure funding availability. The quantity to be measured for payment shall be each lump sum (LS) amount of the extra utility work. Payments for extra Utility Work shall be made under the JB-900 allowance item and shall be documented with a proper Change Order Request, provided that sufficient funding of JB-900 for each affected utility(ies) is available. Change Order Requests and Overrun Change Order Requests for Utility Work shall be submitted separately from Public Work Change Order Requests and Overrun Change Order Requests. The costs breakdown by items for each participating Utility shall be clearly tabulated and sub-totaled. Public Work costs shall not be

PROJECT ID: SANDRESPC

combined with Utility Work Costs on Change Order Requests of any type.

E. Price to Cover

Payment made under each lump sum (LS) amount, shall cover the cost of all labor, materials, equipment, supervision, insurance and incidentals necessary to complete the extra utility work. The price includes the modification of any methods of construction and operation and associated changes in sequencing of the City contract work as required, in order to perform the extra utility work and/or the City contract work. Each lump sum (LS) amount includes all special considerations due to all site conditions, loss of productivity and efficiency, idle time, demobilization and remobilization, site maintenance, maintenance of traffic and protection, extended performance, extended overhead costs, extended engineering and extended home office costs in connection with the extra utility work. In consideration of each lump sum (LS) amount, the contractor waives all claims for impacts arising from the extra utility work, which shall be deemed included in each lump sum amount paid. The total estimated cost of this item is the "fixed sum" amount shown for this item in the Bid Schedule. No guarantee is given that the actual lump sum cost for this item will in fact be the "fixed sum" amount. The "fixed sum" amount is included in the total bid solely to ensure that sufficient monies will be available to pay the Contractor under this item.

F. References

None

JB 1006V - 1020V VERTICAL OR ROLLED WATERMAIN OFFSET

A. Description

Under this section, the contractor shall provide all incremental labor, materials, equipment, insurance and incidentals required to offset water mains for vertical or rolled movement around exposed subsurface utilities encountered during construction. The work shall be performed in accordance with the contract plans, specifications and at the direction of the facility operator, upon written approval from the resident engineer. The trenches to be excavated shall be determined by the size of the water main and the extent of adjustment required to avoid utilities interferences during all phases of contract work. This work shall be performed in accordance with all the applicable City and utility specifications, and at the direction of the facility operator.

B. Materials

The contractor shall supply all materials necessary to offset the city water main(s) in accordance with the City standard water main specifications and approved by the facility operator.

C. Methods of Construction

The contractor shall cut, break and remove various thicknesses of surface and base pavement, excavate by hand to expose all utility facilities within the trench. Upon exposing the affected utility(s) determine clearances at the sole discretion of the facility operator. The contractor shall then be permitted to proceed with a combination of hand and machine excavation sufficient to accommodate the appropriate water main offset(s) under or above all utility facilities interfering with the installation of the water main as directed by the facility operator.

The contractor shall layout, measure, load and transport, unload, job store, as necessary, handle and lay fittings or portion of pipe, including labor, equipment and material for the complete installation of a water main offset including, but not limited to, fittings, all types of joints, retainer glands, rods and bands.

D. Method of Measurement

The quantity to be measured for vertical or rolled water main offset(s) shall be each (ea) water main offset which shall be defined as one (1) vertical or rolled water main offset in its final location with four (4) fittings and all appurtenances to avoid a single or multiple utility interference as directed by the facility operator. Each type of water main offset shall be paid for separately. The types of water main offsets are defined as follows:

1. JB 1006V – 6" Vertical or rolled water main offset
2. JB 1008V – 8" Vertical or rolled water main offset
3. JB 1012V – 12" Vertical or rolled water main offset
4. JB 1016V – 16" Vertical or rolled water main offset
5. JB 1020V – 20" Vertical or rolled water main offset

E. Price to Cover

The price for a water main offset shall include the cost of all labor, materials, equipment, insurance, and incidentals necessary to completely install a full water main offset inclusive of, but is not limited to, four (4) fittings, all types of joints, retainer glands, rods, bands and one (1) foot of sand around the pipe. If less than four (4) fittings are used, payment for this item shall be proportional to the number of fittings installed. For example, if 2 fittings are installed payment for this item shall be 50% of the applicable price. The contractor shall protect and maintain the integrity of the interfering facilities without disruption of service to the utility facility customers and in accordance with the contract documents. All associated maintenance of traffic, traffic plates, sheeting, cutting, breaking and removal of various thickness of surface and base pavement, excavating by hand to expose existing facilities, widening the trench, and any extra depth to facilitate the work, snaking, furnish, place and tamp backfill after water main installation, required removing, trucking, storing, and dispensing of material shall be deemed included in the unit price. The price shall also include the cost of providing temporary pavement restoration, as required. Permanent pavement restoration, if applicable, shall be paid under appropriate City items. The support and protection of utilities crossings encountered while performing this work shall be included in this JB item. No additional payment shall be made for utility crossings.

E. References

1. Sketch JB 1000V

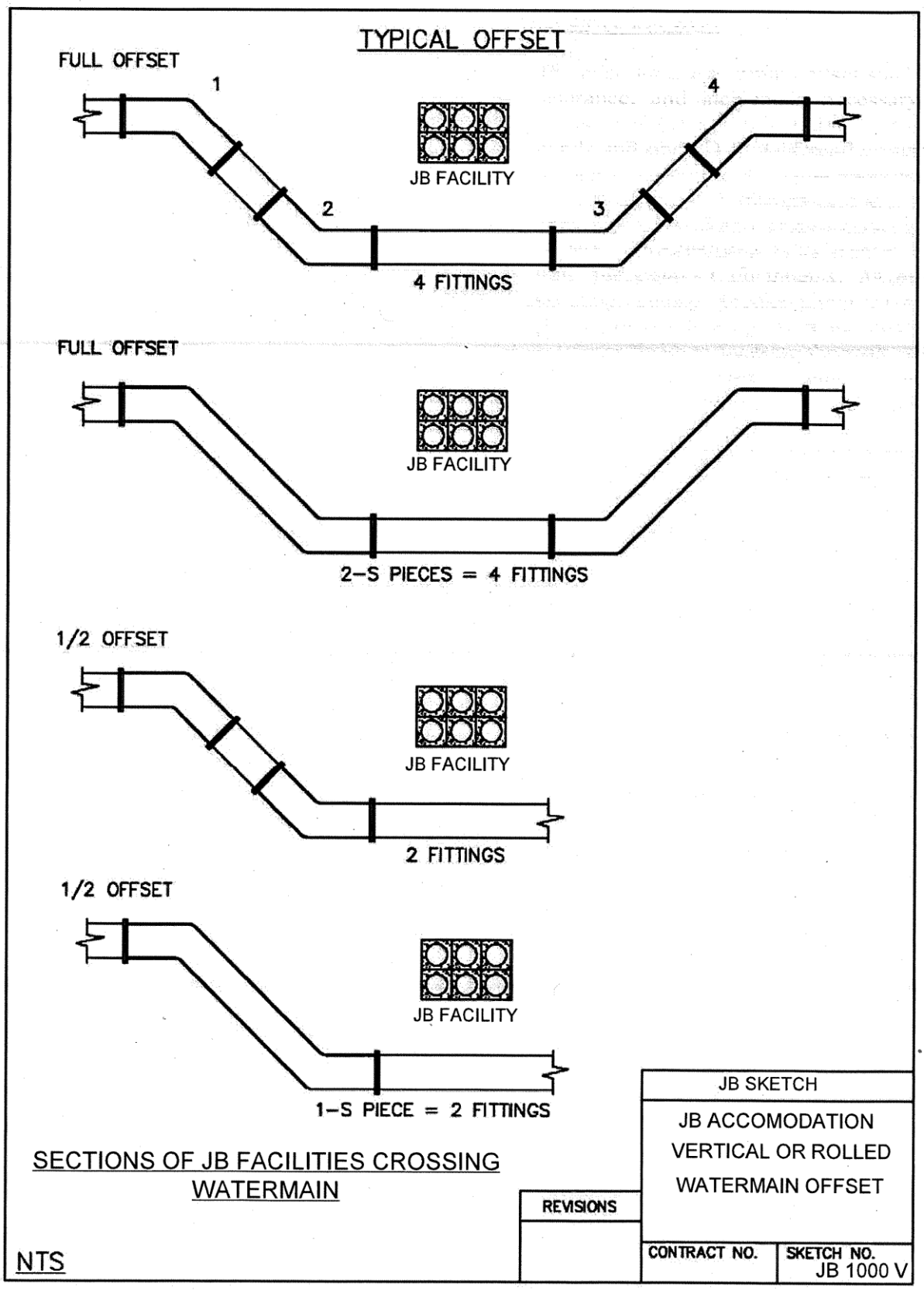
TYPICAL OFFSET
FULL OFFSET
1
2
3
4
JB FACILITY
4 FITTINGS
FULL OFFSET
JB FACILITY
2-S PIECES = 4 FITTINGS
1/2 OFFSET
JB FACILITY
2 FITTINGS
1/2 OFFSET
JB FACILITY
1-S PIECE = 2 FITTINGS
SECTIONS OF JB FACILITIES CROSSING WATERMAIN
NTS
JB SKETCH
JB ACCOMODATION VERTICAL OR ROLLED WATERMAIN OFFSET
REVISIONS
CONTRACT NO.
SKETCH NO.
JB 1000 V

LISTING OF COMPANY (IES) NAMED FOR THIS CONTRACT

COMPANY NAME	CONTACT NAME	CONTACT TELEPHONE
CON EDISON	O' NEIL WRIGHT	212-460-3870
ECS	AUBREY MAKHANLALL	516-758-3705

PRIVATE UTILITY
SCOPE OF WORK

(NO TEXT IN THIS SECTION)

JOINT BID WORKSHEET

ENGINEER'S ESTIMATE OF QUANTITY AND TYPES OF INTERFERENCE

FOR CONSOLIDATED EDISON COMPANY OF NEW YORK

SANDRESPC

EAST SIDE COASTAL RESILIENCY

BOROUGH OF MANHATTAN

JOINT BID ITEM NUMBER	DESCRIPTION	UNITS	ESTIMATED QUANTITY
JB 100.1	UTILITIES CROSSING TRENCH FOR CATCH BASIN CHUTE CONNECT. AND/OR TESTPIT (TYPE .1)	EA	8
JB 100.2	UTILITIES CROSSING TRENCH FOR CATCH BASIN CHUTE CONNECT. AND/OR TESTPIT (TYPE .2)	EA	3
JB 100.3	UTILITIES CROSSING TRENCH FOR CATCH BASIN CHUTE CONNECT. AND/OR TESTPIT (TYPE .3)	EA	2
JB 100.4	UTILITIES CROSSING TRENCH FOR CATCH BASIN CHUTE CONNECT. AND/OR TESTPIT (TYPE .4)	EA	1
JB 101.1	UTILITIES CROSSING TRENCH FOR SEWERS UP TO AND INCL. 24" DIAMETER (TYPE .1)	EA	19
JB 101.2	UTILITIES CROSSING TRENCH FOR SEWERS UP TO AND INCL. 24" DIAMETER (TYPE .2)	EA	27
JB 101.3	UTILITIES CROSSING TRENCH FOR SEWERS UP TO AND INCL. 24" DIAMETER (TYPE .3)	EA	5
JB 101.4	UTILITIES CROSSING TRENCH FOR SEWERS UP TO AND INCL. 24" DIAMETER (TYPE .4)	EA	3
JB 101.5	UTILITIES CROSSING TRENCH FOR SEWERS UP TO AND INCL. 24" DIAMETER (TYPE .5)	EA	2
JB 102.1	UTILITIES CROSSING TRENCH FOR SEWERS OVER 24" TO 36" DIAMETER (TYPE .1)	EA	6
JB 102.2	UTILITIES CROSSING TRENCH FOR SEWERS OVER 24" TO 36" DIAMETER (TYPE .2)	EA	6
JB 102.3	UTILITIES CROSSING TRENCH FOR SEWERS OVER 24" TO 36" DIAMETER (TYPE .3)	EA	4
JB 102.4	UTILITIES CROSSING TRENCH FOR SEWERS OVER 24" TO 36" DIAMETER (TYPE .4)	EA	3
JB 102.5	UTILITIES CROSSING TRENCH FOR SEWERS OVER 24" TO 36" DIAMETER (TYPE .5)	EA	18
JB 103.1	UTILITIES CROSSING TRENCH FOR SEWERS OVER 36" TO 48" DIAMETER (TYPE .1)	EA	18
JB 103.2	UTILITIES CROSSING TRENCH FOR SEWERS OVER 36" TO 48" DIAMETER (TYPE .2)	EA	19
JB 103.3	UTILITIES CROSSING TRENCH FOR SEWERS OVER 36" TO 48" DIAMETER (TYPE .3)	EA	4

JOINT BID WORKSHEET

ENGINEER'S ESTIMATE OF QUANTITY AND TYPES OF INTERFERENCE

FOR CONSOLIDATED EDISON COMPANY OF NEW YORK

SANDRESPC

EAST SIDE COASTAL RESILIENCY

BOROUGH OF MANHATTAN

JOINT BID ITEM NUMBER	DESCRIPTION	UNITS	ESTIMATED QUANTITY
JB 103.4	UTILITIES CROSSING TRENCH FOR SEWERS OVER 36" TO 48" DIAMETER (TYPE .4)	EA	1
JB 108.1	UTILITIES CROSSING TRENCH FOR WATERMAIN UP TO AND INCL. 12" DIAMETER (TYPE .1)	EA	20
JB 108.2	UTILITIES CROSSING TRENCH FOR WATERMAIN UP TO AND INCL. 12" DIAMETER (TYPE .2)	EA	34
JB 108.3	UTILITIES CROSSING TRENCH FOR WATERMAIN UP TO AND INCL. 12" DIAMETER (TYPE .3)	EA	10
JB 108.4	UTILITIES CROSSING TRENCH FOR WATERMAIN UP TO AND INCL. 12" DIAMETER (TYPE .4)	EA	4
JB 109.1	UTILITIES CROSSING TRENCH FOR WATERMAIN OVER 12" AND UP TO 24" (TYPE .1)	EA	3
JB 109.2	UTILITIES CROSSING TRENCH FOR WATERMAIN OVER 12" AND UP TO 24" (TYPE .2)	EA	6
JB 109.3	UTILITIES CROSSING TRENCH FOR WATERMAIN OVER 12" AND UP TO 24" (TYPE .3)	EA	3
JB 109.4	UTILITIES CROSSING TRENCH FOR WATERMAIN OVER 12" AND UP TO 24" (TYPE .4)	EA	2
JB 122	INCREMENTAL COST FOR MGP CONTAMINENT HANDLING & DISPOSAL	CY	10,000
JB 200	EXTRA DEPTH EXCAVATION OF CATCH BASIN CHUTE CONNECTION PIPES	LF	100
JB 225	INSTALLATION AND REMOVAL OF CATCH BASINS WITH UTILITY INTERFERENCES	EA	3
JB 226	INSTALLATION OF CATCH BASINS WITH UTILITY INTERFERENCES	EA	2
JB 300	SPECIAL CARE EXCAVATION AND BACKFILLING	CY	344
JB 301	SPECIAL CARE EXCAVATION AND BACKFILLING FOR OIL-O-STATIC PIPES	CY	120
JB 302	FIELD COATING OF OIL-O-STATIC FEEDER PIPES	LF	1,800
JB 303	FURNISH, DELIVER AND INSTALL TYPE 3/8 CLEAN SAND BACKFILL	CY	210

JOINT BID WORKSHEET

ENGINEER'S ESTIMATE OF QUANTITY AND TYPES OF INTERFERENCE

FOR CONSOLIDATED EDISON COMPANY OF NEW YORK

SANDRESPC

EAST SIDE COASTAL RESILIENCY

BOROUGH OF MANHATTAN

JOINT BID ITEM NUMBER	DESCRIPTION	UNITS	ESTIMATED QUANTITY
JB 330E.1	SUPPORT & PROTECT ELEC, GAS & STEAM FACILITIES DURING EXCAVATION OF CITY TRENCH WHEN FACILITIES LIE W/IN TRENCH LIMITS (TYPE .1)	LF	120
JB 330E.2	SUPPORT & PROTECT ELEC, GAS & STEAM FACILITIES DURING EXCAVATION OF CITY TRENCH WHEN FACILITIES LIE W/IN TRENCH LIMITS (TYPE .2)	LF	410
JB 330E.3	SUPPORT & PROTECT ELEC, GAS & STEAM FACILITIES DURING EXCAVATION OF CITY TRENCH WHEN FACILITIES LIE W/IN TRENCH LIMITS (TYPE .3)	LF	100
JB 330E.4	SUPPORT & PROTECT ELEC, GAS & STEAM FACILITIES DURING EXCAVATION OF CITY TRENCH WHEN FACILITIES LIE W/IN TRENCH LIMITS (TYPE .4)	LF	80
JB 400	TEST PITS FOR UTILITY FACILITIES	CY	280
JB 400A	SURVEYED AND DRAFTED TEST PITS FOR UTILITY FACILITIES	CY	250
JB 401	TRENCH EXCAVATION FOR ADJUSTMENT OF UTILITIES	CY	421
JB 402.1A	EXISTING OCCUPIED CONCRETE ENCASED CONDUITS PLACED IN FINAL POSITION WITH CONCRETE ENCASEMENT	LF	4,148
JB 402.2A	EXISTING OCCUPIED NON-CONCRETE ENCASED CONDUITS PLACED IN FINAL POSITION WITH CONCRETE ENCASEMENT	LF	2,765
JB 402B.1A	EXISTING TRANSMISSION FACILITY UP TO 6" DIAM, ADJUSTED 0" UP TO AND INCLUDING 6" IN ANY DIRECTION, TO FINAL POSITION	LF	80
JB 402B.1B	EXISTING TRANSMISSION FACILITY 6" TO 12" DIAM, ADJUSTED 0" UP TO AND INCLUDING 6" IN ANY DIRECTION, TO FINAL POSITION	LF	120
JB 402B.2A	EXISTING TRANSMISSION FACILITY UP TO 6" DIAM, ADJUSTED GREATER THAN 6" UP TO AND INCLUDING 9" IN ANY DIRECTION, TO FINAL POSITION	LF	120
JB 402B.2B	EXISTING TRANSMISSION FACILITY 6" TO 12" DIAM, ADJUSTED GREATER THAN 6" UP TO AND INCLUDING 9" IN ANY DIRECTION, TO FINAL POSITION	LF	180
JB 402B.3A	EXISTING TRANSMISSION FACILITY UP TO 6" DIAM, ADJUSTED GREATER THAN 9" UP TO AND INCLUDING 12" IN ANY DIRECTION, TO FINAL POSITION	LF	200
JB 402B.3B	EXISTING TRANSMISSION FACILITY 6" TO 12" DIAM, ADJUSTED GREATER THAN 9" UP TO AND INCLUDING 12" IN ANY DIRECTION, TO FINAL POSITION	LF	300
JB 403	PLACING STEEL PROTECTION PLATES FOR UTILITY FACILITIES	SF	2,200
JB 404	PIER AND/OR PLATE METHOD OF PROTECTION FOR DUCTILE IRON WATER MAIN WITH LESS THAN 24" COVER	SF	600

JOINT BID WORKSHEET

ENGINEER'S ESTIMATE OF QUANTITY AND TYPES OF INTERFERENCE

FOR CONSOLIDATED EDISON COMPANY OF NEW YORK

SANDRESPC

EAST SIDE COASTAL RESILIENCY

BOROUGH OF MANHATTAN

JOINT BID ITEM NUMBER	DESCRIPTION	UNITS	ESTIMATED QUANTITY
JB 405.1	EXCAVATION FOR INSTALLATION OF UTILITY FACILITIES WITH TOTAL DEPTHS LESS THAN 5 FEET	CY	4,010
JB 405.2	EXCAVATION FOR INSTALLATION OF UTILITY FACILITIES WITH TOTAL DEPTHS EQUAL OR GREATER THAN 5 FEET	CY	2,315
JB 406	EXCAVATION FOR UTILITY STRUCTURE	CY	4,015
JB 410.1	MASS EXCAVATION (VOLUME UP TO AND INCLUDING 20%) FROM TOP OF ROADWAY LESS THAN 5 FT DEEP	CY	1,240
JB 410.2	MASS EXCAVATION (VOLUME OVER 20% UP TO AND INCLUDING 40%) FROM TOP OF ROADWAY LESS THAN 5 FT DEEP	CY	874
JB 410.5	MASS EXCAVATION (VOLUME UP TO AND INCLUDING 20%) FROM TOP OF ROADWAY EQUAL OR GREATER THAN 5 FT	CY	500
JB 410.6	MASS EXCAVATION (VOLUME OVER 20% UP TO AND INCLUDING 40%) FROM TOP OF ROADWAY EQUAL OR GREATER THAN 5 FT	CY	250
JB 450.1	CONSTRUCTION FIELD SUPPORT REQUIRING AVERAGE SIZE SURVEY CREW PERFORMING TYPICAL SURVEY FUNCTIONS (TYPE .1)	CRHRS	256
JB 450.2	CONSTRUCTION FIELD SUPPORT REQUIRING AVERAGE SMALL SIZE CREW CAPABLE OF PERFORMING VARIOUS TASKS (TYPE .2)	CRHRS	3,408
JB 450.3	CONSTRUCTION FIELD SUPPORT REQUIRING AVERAGE MEDIUM SIZE CREW CAPABLE OF PERFORMING VARIOUS TASKS (TYPE .3)	CRHRS	5,408
JB 500	REMOVAL OF ABANDONED UTILITY CONDUITS (NON-CONCRETE ENCASED)	LF	10,530
JB 500.1	REMOVAL OF ABANDONED PVC CABLE TELEVISION DUCT BANKS ATTACHED TO THE PAVEMENT BASE, CONCRETE ENCASED	LF	3,510
JB 501	REMOVAL OF ABANDONED MASONRY FOR ELEC. AND TEL. FACILITIES	CY	60
JB 603E.1	INSTALL UTILITY CONDUITS PLACED IN FINAL POSITION WITHOUT CONCRETE ENCASEMENT	LF	17,566
JB 603E.2	INSTALL UTILITY CONDUITS PLACED IN FINAL POSITION WITH CONCRETE ENCASEMENT	LF	40,987
JB 610.3	INSTALLATION OF STEEL GAS PIPE - 3" DIAMETER	LF	300
JB 610.4	INSTALLATION OF STEEL GAS PIPE - 4" DIAMETER	LF	280

JOINT BID WORKSHEET
ENGINEER'S ESTIMATE OF QUANTITY AND TYPES OF INTERFERENCE
FOR CONSOLIDATED EDISON COMPANY OF NEW YORK
SANDRESPC
EAST SIDE COASTAL RESILIENCY
BOROUGH OF MANHATTAN

JOINT BID ITEM NUMBER	DESCRIPTION	UNITS	ESTIMATED QUANTITY
JB 610.6	INSTALLATION OF STEEL GAS PIPE - 6" DIAMETER	LF	138
JB 610.8	INSTALLATION OF STEEL GAS PIPE - 8" DIAMETER	LF	60
JB 610.12	INSTALLATION OF STEEL GAS PIPE - 12" DIAMETER	LF	460
JB 611.3	INSTALLATION OF STEEL GAS PIPE FITTING - 3" DIAMETER	EA	6
JB 611.4	INSTALLATION OF STEEL GAS PIPE FITTING - 4" DIAMETER	EA	6
JB 611.6	INSTALLATION OF STEEL GAS PIPE FITTING - 6" DIAMETER	EA	14
JB 611.8	INSTALLATION OF STEEL GAS PIPE FITTING - 8" DIAMETER	EA	4
JB 611.12	INSTALLATION OF STEEL GAS PIPE FITTING - 12" DIAMETER	EA	20
JB 615.2	INSTALLATION OF PLASTIC GAS PIPE - 2" DIAMETER	LF	80
JB 615.3	INSTALLATION OF PLASTIC GAS PIPE - 3" DIAMETER	LF	40
JB 615.6	INSTALLATION OF PLASTIC GAS PIPE - 6" DIAMETER	LF	450
JB 615.12	INSTALLATION OF PLASTIC GAS PIPE - 12" DIAMETER	LF	780
JB 616.2	INSTALLATION OF PLASTIC GAS PIPE FITTING - 2" DIAMETER	EA	4
JB 616.3	INSTALLATION OF PLASTIC GAS PIPE FITTING - 3" DIAMETER	EA	3
JB 616.6	INSTALLATION OF PLASTIC GAS PIPE FITTING - 6" DIAMETER	EA	16
JB 616.12	INSTALLATION OF PLASTIC GAS PIPE FITTING - 12" DIAMETER	EA	10
JB 620.12	INSTALLATION OF STEAM PIPE - 24" DIAMETER	LF	350

JOINT BID WORKSHEET
ENGINEER'S ESTIMATE OF QUANTITY AND TYPES OF INTERFERENCE
FOR CONSOLIDATED EDISON COMPANY OF NEW YORK
SANDRESPC
EAST SIDE COASTAL RESILIENCY
BOROUGH OF MANHATTAN

JOINT BID ITEM NUMBER	DESCRIPTION	UNITS	ESTIMATED QUANTITY
JB 621.12	INSTALLATION OF STEAM PIPE FITTING - 24" DIAMETER	EA	12
JB 625B	INSTALLATION OF STEAM TRAP ASSEMBLY	EA	3
JB 625C	INSTALLATION OF STEAM DRAIN ASSEMBLY	EA	3
JB 625E	INSTALLATION OF STEAM ANCHOR	EA	2
JB 625F	INSTALLATION OF STEAM MANHOLE	EA	3
JB 636 EA	ADJUSTMENT OF UTILITY HARDWARE (UNDER 7" WIDTH)	EA	10
JB 636 EB	ADJUSTMENT OF UTILITY HARDWARE (7" TO UNDER 14" WIDTH)	EA	8
JB 636 EC	ADJUSTMENT OF UTILITY HARDWARE (14" TO UNDER 30" WIDTH)	EA	16
JB 636 ED	ADJUSTMENT OF UTILITY HARDWARE (30" TO UNDER 34" WIDTH)	EA	8
JB 636 EE	ADJUSTMENT OF UTILITY HARDWARE (34" TO UNDER 41" WIDTH)	EA	14
JB 636 EG	ADJUSTMENT OF UTILITY HARDWARE (41" TO UNDER 75" WIDTH)	EA	15
JB 636 EH	ADJUSTMENT OF UTILITY HARDWARE (75" TO UNDER 125" WIDTH)	EA	5
JB 636 EI	ADJUSTMENT OF UTILITY HARDWARE (125" TO UNDER 170" WIDTH)	EA	8
JB 636 MA	MODIFICATION OF WORK METHODS TO ACCOMMODATE UTILITY HARDWARE (UNDER 7" WIDTH)	EA	20
JB 636 MB	MODIFICATION OF WORK METHODS TO ACCOMMODATE UTILITY HARDWARE (7" TO UNDER 14" WIDTH)	EA	16
JB 636 MC	MODIFICATION OF WORK METHODS TO ACCOMMODATE UTILITY HARDWARE (14" TO UNDER 30" WIDTH)	EA	16
JB 636 MD	MODIFICATION OF WORK METHODS TO ACCOMMODATE UTILITY HARDWARE (30" TO UNDER 34" WIDTH)	EA	16

JOINT BID WORKSHEET

ENGINEER'S ESTIMATE OF QUANTITY AND TYPES OF INTERFERENCE

FOR CONSOLIDATED EDISON COMPANY OF NEW YORK

SANDRESPC

EAST SIDE COASTAL RESILIENCY

BOROUGH OF MANHATTAN

JOINT BID ITEM NUMBER	DESCRIPTION	UNITS	ESTIMATED QUANTITY
JB 636 ME	MODIFICATION OF WORK METHODS TO ACCOMMODATE UTILITY HARDWARE (34" TO UNDER 41" WIDTH)	EA	24
JB 636 MG	MODIFICATION OF WORK METHODS TO ACCOMMODATE UTILITY HARDWARE (41" TO UNDER 75" WIDTH)	EA	30
JB 636 MH	MODIFICATION OF WORK METHODS TO ACCOMMODATE UTILITY HARDWARE (75" TO UNDER 125" WIDTH)	EA	10
JB 636 MI	MODIFICATION OF WORK METHODS TO ACCOMMODATE UTILITY HARDWARE (125" TO UNDER 170" WIDTH)	EA	12
JB 636 R	REPAIR TO UTILITY STRUCTURES	CY	100
JB 636 SA	ADJUSTMENT OF UTILITY STEAM HARDWARE (CONCRETE COLLARS)	SF	648
JB 636 SB	ADJUSTMENT OF UTILITY STEAM CASTINGS (UNDER AND INCLUDING 8" WIDTH)	EA	3
JB 636 SC	ADJUSTMENT OF UTILITY STEAM CASTINGS (ABOVE 8" TO 34" WIDTH)	EA	4
JB 636 SMB	MODIFICATION OF WORK METHODS TO ACCOMMODATE UTILITY STEAM HARDWARE (UNDER AND INCLUDING 8" WIDTH)	EA	5
JB 636 SMC	MODIFICATION OF WORK METHODS TO ACCOMMODATE UTILITY STEAM HARDWARE (ABOVE 8" TO 34" WIDTH)	EA	6
JB 638 N	INSTALLATION OF FIELD CONSTRUCTED UTILITY STRUCTURE	CY	1,020
JB 638 R	BREAK OUT AND REMOVE UTILITY STRUCTURE	CY	850
JB 700	SPECIAL MODIFICATION OF WORK METHODS TO ACCOMMODATE/PROTECT UNDERGROUND FACILITIES WITH LIMITED COVER	CY	220
JB 710.3	REMOVAL OF ABANDONED UTILITY STEEL/CAST IRON/PLASTIC, OVER 20" DIAMETER PIPES	LF	150
JB 711	USE SHEETING LINE AS FORM	LF	800
JB 800	MODIFICATION OF CONCRETE YOKE TROLLEY STRUCTURES REMOVAL WHEN CROSSING UTILITY FACILITIES	LF	280
JB 801	MODIFICATION OF CONCRETE YOKE TROLLEY STRUCTURES REMOVAL PARALLEL TO UTILITY FACILITIES	LF	300

JOINT BID WORKSHEET

ENGINEER'S ESTIMATE OF QUANTITY AND TYPES OF INTERFERENCE

FOR CONSOLIDATED EDISON COMPANY OF NEW YORK

SANDRESPC

EAST SIDE COASTAL RESILIENCY

BOROUGH OF MANHATTAN

JOINT BID ITEM NUMBER	DESCRIPTION	UNITS	ESTIMATED QUANTITY
JB 803.1	LINE CUT BY PNEUMATIC TOOLS IN LIEU OF SAW CUT ASSOCIATED WITH RDWY REMOVAL (LINE CUT ASPHALT ROADWAY)	LF	200
JB 803.2	LINE CUT BY PNEUMATIC TOOLS IN LIEU OF SAW CUT ASSOCIATED WITH RDWY REMOVAL (LINE CUT ASPHALT AND CONCRETE ROADWAY)	LF	280
JB 803.3	LINE CUT BY PNEUMATIC TOOLS IN LIEU OF SAW CUT ASSOCIATED WITH RDWY REMOVAL (LINE CUT ASPHALT, CONCRETE, AND BELGIUM BLOCK)	LF	420
JB 850	INSTALLATION OF RUBBER SHEETS FOR UTILITY FACILITIES	SF	200
JB 900	EXTRA UTILITY WORK COSTS ALLOWANCE	FS	1
JB 1006V	6" VERTICAL OR ROLLED WATER MAIN OFFSET	EA	8
JB 1008V	8" VERTICAL OR ROLLED WATER MAIN OFFSET	EA	2
JB 1012V	12" VERTICAL OR ROLLED WATER MAIN OFFSET	EA	6
JB 1020V	20" VERTICAL OR ROLLED WATER MAIN OFFSET	EA	4

CON EDISON JOINT BIDDING SCOPE OF WORK
SUPPORT AND PROTECTION
SANDRESPC
EAST SIDE COASTAL RESILIENCY
BOROUGH OF MANHATTAN

JB 100.1 **UTILITIES CROSSING TRENCH FOR CATCH BASIN CHUTE CONNECT. AND/OR TESTPIT (TYPE .1)** **EA**

At the following locations:

AS ENCOUNTERED

Total Quantity for JB 100.1 = 8

JB 100.2 **UTILITIES CROSSING TRENCH FOR CATCH BASIN CHUTE CONNECT. AND/OR TESTPIT (TYPE .2)** **EA**

At the following locations:

AS ENCOUNTERED

Total Quantity for JB 100.2 = 3

JB 100.3 **UTILITIES CROSSING TRENCH FOR CATCH BASIN CHUTE CONNECT. AND/OR TESTPIT (TYPE .3)** **EA**

At the following locations:

AS ENCOUNTERED

Total Quantity for JB 100.3 = 2

JB 100.4 **UTILITIES CROSSING TRENCH FOR CATCH BASIN CHUTE CONNECT. AND/OR TESTPIT (TYPE .4)** **EA**

At the following locations:

AS ENCOUNTERED

Total Quantity for JB 100.4 = 1

JB 101.1 **UTILITIES CROSSING TRENCH FOR SEWERS UP TO AND INCL. 24" DIAMETER (TYPE .1)** **EA**

At the following locations:

AS ENCOUNTERED

Total Quantity for JB 101.1 = 19

CON EDISON JOINT BIDDING SCOPE OF WORK
SUPPORT AND PROTECTION
SANDRESPC
EAST SIDE COASTAL RESILIENCY
BOROUGH OF MANHATTAN

JB 101.2	**UTILITIES CROSSING TRENCH FOR SEWERS UP TO AND INCL. 24" DIAMETER (TYPE .2)**	**EA**
	At the following locations:	
	AS ENCOUNTERED	
	Total Quantity for JB 101.2 = 27	
JB 101.3	**UTILITIES CROSSING TRENCH FOR SEWERS UP TO AND INCL. 24" DIAMETER (TYPE .3)**	**EA**
	At the following locations:	
	AS ENCOUNTERED	
	Total Quantity for JB 101.3 = 5	
JB 101.4	**UTILITIES CROSSING TRENCH FOR SEWERS UP TO AND INCL. 24" DIAMETER (TYPE .4)**	**EA**
	At the following locations:	
	AS ENCOUNTERED	
	Total Quantity for JB 101.4 = 3	
JB 101.5	**UTILITIES CROSSING TRENCH FOR SEWERS UP TO AND INCL. 24" DIAMETER (TYPE .5)**	**EA**
	At the following locations:	
	AS ENCOUNTERED	
	Total Quantity for JB 101.5 = 2	
JB 102.1	**UTILITIES CROSSING TRENCH FOR SEWERS OVER 24" TO 36" DIAMETER (TYPE .1)**	**EA**
	At the following locations:	
	AS ENCOUNTERED	
	Total Quantity for JB 102.1 = 6	

CON EDISON JOINT BIDDING SCOPE OF WORK
SUPPORT AND PROTECTION
SANDRESPC
EAST SIDE COASTAL RESILIENCY
BOROUGH OF MANHATTAN

JB 102.2 **UTILITIES CROSSING TRENCH FOR SEWERS OVER 24" TO 36" DIAMETER (TYPE .2)** **EA**

At the following locations:

AS ENCOUNTERED

Total Quantity for JB 102.2 = 6

JB 102.3 **UTILITIES CROSSING TRENCH FOR SEWERS OVER 24" TO 36" DIAMETER (TYPE .3)** **EA**

At the following locations:

AS ENCOUNTERED

Total Quantity for JB 102.3 = 4

JB 102.4 **UTILITIES CROSSING TRENCH FOR SEWERS OVER 24" TO 36" DIAMETER (TYPE .4)** **EA**

At the following locations:

AS ENCOUNTERED

Total Quantity for JB 102.4 = 3

JB 102.5 **UTILITIES CROSSING TRENCH FOR SEWERS OVER 24" TO 36" DIAMETER (TYPE .5)** **EA**

At the following locations:

AS ENCOUNTERED

Total Quantity for JB 102.5 = 18

JB 103.1 **UTILITIES CROSSING TRENCH FOR SEWERS OVER 36" TO 48" DIAMETER (TYPE .1)** **EA**

At the following locations:

AS ENCOUNTERED

Total Quantity for JB 103.1 = 18

CON EDISON JOINT BIDDING SCOPE OF WORK
SUPPORT AND PROTECTION
SANDRESPC
EAST SIDE COASTAL RESILIENCY
BOROUGH OF MANHATTAN

JB 103.2 **UTILITIES CROSSING TRENCH FOR SEWERS OVER 36" TO 48" DIAMETER (TYPE .2)** **EA**

At the following locations:

AS ENCOUNTERED

Total Quantity for JB 103.2 = 19

JB 103.3 **UTILITIES CROSSING TRENCH FOR SEWERS OVER 36" TO 48" DIAMETER (TYPE .3)** **EA**

At the following locations:

AS ENCOUNTERED

Total Quantity for JB 103.3 = 4

JB 103.4 **UTILITIES CROSSING TRENCH FOR SEWERS OVER 36" TO 48" DIAMETER (TYPE .4)** **EA**

At the following locations:

AS ENCOUNTERED

Total Quantity for JB 103.4 = 1

JB 108.1 **UTILITIES CROSSING TRENCH FOR WATERMAIN UP TO AND INCL. 12" DIAMETER (TYPE .1)** **EA**

At the following locations:

AS ENCOUNTERED

Total Quantity for JB 108.1 = 20

JB 108.2 **UTILITIES CROSSING TRENCH FOR WATERMAIN UP TO AND INCL. 12" DIAMETER (TYPE .2)** **EA**

At the following locations:

AS ENCOUNTERED

Total Quantity for JB 108.2 = 34

CON EDISON JOINT BIDDING SCOPE OF WORK
SUPPORT AND PROTECTION
SANDRESPC
EAST SIDE COASTAL RESILIENCY
BOROUGH OF MANHATTAN

JB 108.3 **UTILITIES CROSSING TRENCH FOR WATERMAIN UP TO AND INCL. 12" DIAMETER (TYPE .3)** **EA**

At the following locations:

AS ENCOUNTERED

Total Quantity for JB 108.3 = 10

JB 108.4 **UTILITIES CROSSING TRENCH FOR WATERMAIN UP TO AND INCL. 12" DIAMETER (TYPE .4)** **EA**

At the following locations:

AS ENCOUNTERED

Total Quantity for JB 108.4 = 4

JB 109.1 **UTILITIES CROSSING TRENCH FOR WATERMAIN OVER 12" AND UP TO 24" (TYPE .1)** **EA**

At the following locations:

AS ENCOUNTERED

Total Quantity for JB 109.1 = 3

JB 109.2 **UTILITIES CROSSING TRENCH FOR WATERMAIN OVER 12" AND UP TO 24" (TYPE .2)** **EA**

At the following locations:

AS ENCOUNTERED

Total Quantity for JB 109.2 = 6

JB 109.3 **UTILITIES CROSSING TRENCH FOR WATERMAIN OVER 12" AND UP TO 24" (TYPE .3)** **EA**

At the following locations:

AS ENCOUNTERED

Total Quantity for JB 109.3 = 3

CON EDISON JOINT BIDDING SCOPE OF WORK
SUPPORT AND PROTECTION
SANDRESPC
EAST SIDE COASTAL RESILIENCY
BOROUGH OF MANHATTAN

JB 109.4 **UTILITIES CROSSING TRENCH FOR WATERMAIN OVER 12" AND UP TO 24" (TYPE .4)** **EA**

At the following locations:

AS ENCOUNTERED

Total Quantity for JB 109.4 = 2

JB 122 **INCREMENTAL COST FOR MGP CONTAMINENT HANDLING & DISPOSAL** **CY**

At the following locations:

AS DIRECTED BY CON EDISON REPRESENTATIVE

Total Quantity for JB 122 = 10,000

JB 200 **EXTRA DEPTH EXCAVATION OF CATCH BASIN CHUTE CONNECTION PIPES** **LF**

At the following locations:

AS ENCOUNTERED AND AS DIRECTED BY CON EDISON REPRESENTATIVE

Total Quantity for JB 200 = 100

JB 225 **INSTALLATION AND REMOVAL OF CATCH BASINS WITH UTILITY INTERFERENCES** **EA**

At the following locations:

AS ENCOUNTERED

Total Quantity for JB 225 = 3

JB 226 **INSTALLATION OF CATCH BASINS WITH UTILITY INTERFERENCES** **EA**

At the following locations:

AS ENCOUNTERED

Total Quantity for JB 226 = 2

CON EDISON JOINT BIDDING SCOPE OF WORK
SUPPORT AND PROTECTION
SANDRESPC
EAST SIDE COASTAL RESILIENCY
BOROUGH OF MANHATTAN

JB 300 **SPECIAL CARE EXCAVATION AND BACKFILLING** **CY**

At the following locations:

AS ENCOUNTERED AND AS DIRECTED BY CON EDISON REPRESENTATIVE

Total Quantity for JB 300 = 344

JB 301 **SPECIAL CARE EXCAVATION AND BACKFILLING FOR OIL-O-STATIC PIPES** **CY**

At the following locations:

AS ENCOUNTERED AND AS DIRECTED BY CON EDISON REPRESENTATIVE

Total Quantity for JB 301 = 120

JB 302 **FIELD COATING OF OIL-O-STATIC FEEDER PIPES** **LF**

At the following locations:

AS ENCOUNTERED AND AS DIRECTED BY CON EDISON REPRESENTATIVE

Total Quantity for JB 302 = 1,800

JB 303 **FURNISH, DELIVER AND INSTALL TYPE 3/8 CLEAN SAND BACKFILL** **CY**

At the following locations:

AS ENCOUNTERED AND AS DIRECTED BY CON EDISON REPRESENTATIVE

Total Quantity for JB 303 = 210

JB 330E.1 **SUPPORT & PROTECT ELEC, GAS & STEAM FACILITIES DURING EXCAVATION OF CITY TRENCH WHEN FACILITIES LIE W/IN TRENCH LIMITS (TYPE .1)** **LF**

At the following locations:

AS ENCOUNTERED

Total Quantity for JB 330E.1 = 120

CON EDISON JOINT BIDDING SCOPE OF WORK
SUPPORT AND PROTECTION
SANDRESPC
EAST SIDE COASTAL RESILIENCY
BOROUGH OF MANHATTAN

JB 330E.2 **SUPPORT & PROTECT ELEC, GAS & STEAM FACILITIES DURING EXCAVATION OF CITY TRENCH WHEN FACILITIES LIE W/IN TRENCH LIMITS (TYPE .2)** **LF**

At the following locations:

AS ENCOUNTERED

Total Quantity for JB 330E.2 = 410

JB 330E.3 **SUPPORT & PROTECT ELEC, GAS & STEAM FACILITIES DURING EXCAVATION OF CITY TRENCH WHEN FACILITIES LIE W/IN TRENCH LIMITS (TYPE .3)** **LF**

At the following locations:

AS ENCOUNTERED

Total Quantity for JB 330E.3 = 100

JB 330E.4 **SUPPORT & PROTECT ELEC, GAS & STEAM FACILITIES DURING EXCAVATION OF CITY TRENCH WHEN FACILITIES LIE W/IN TRENCH LIMITS (TYPE .4)** **LF**

At the following locations:

AS ENCOUNTERED

Total Quantity for JB 330E.4 = 80

JB 400 **TEST PITS FOR UTILITY FACILITIES** **CY**

At the following locations:

AS ENCOUNTERED AND AS DIRECTED BY CON EDISON REPRESENTATIVE

Total Quantity for JB 400 = 280

JB 400A **SURVEYED AND DRAFTED TEST PITS FOR UTILITY FACILITIES** **CY**

At the following locations:

AS DIRECTED BY CON EDISON REPRESENTATIVE

Total Quantity for JB 400A = 250

CON EDISON JOINT BIDDING SCOPE OF WORK
SUPPORT AND PROTECTION
SANDRESPC
EAST SIDE COASTAL RESILIENCY
BOROUGH OF MANHATTAN

JB 401 **TRENCH EXCAVATION FOR ADJUSTMENT OF UTILITIES** **CY**

At the following locations:

AS ENCOUNTERED AND AS DIRECTED BY CON EDISON REPRESENTATIVE

Total Quantity for JB 401 = 421

JB 402.1A **EXISTING OCCUPIED CONCRETE ENCASED CONDUITS PLACED IN FINAL POSITION WITH CONCRETE ENCASEMENT** **LF**

At the following locations:

AS ENCOUNTERED AND AS DIRECTED BY CON EDISON REPRESENTATIVE

Total Quantity for JB 402.1A = 4,148

JB 402.2A **EXISTING OCCUPIED NON-CONCRETE ENCASED CONDUITS PLACED IN FINAL POSITION WITH CONCRETE ENCASEMENT** **LF**

At the following locations:

AS ENCOUNTERED AND AS DIRECTED BY CON EDISON REPRESENTATIVE

Total Quantity for JB 402.2A = 2,765

JB 402B.1A **EXISTING TRANSMISSION FACILITY UP TO 6" DIAM, ADJUSTED 0" UP TO AND INCLUDING 6" IN ANY DIRECTION, TO FINAL POSITION** **LF**

At the following locations:

As Directed By Con Edison Representative

Total Quantity for JB 402B.1A = 80

JB 402B.1B **EXISTING TRANSMISSION FACILITY 6" TO 12" DIAM, ADJUSTED 0" UP TO AND INCLUDING 6" IN ANY DIRECTION, TO FINAL POSITION** **LF**

At the following locations:

As Directed By Con Edison Representative

Total Quantity for JB 402B.1B = 120

CON EDISON JOINT BIDDING SCOPE OF WORK
SUPPORT AND PROTECTION
SANDRESPC
EAST SIDE COASTAL RESILIENCY
BOROUGH OF MANHATTAN

JB 402B.2A **EXISTING TRANSMISSION FACILITY UP TO 6" DIAM, ADJUSTED GREATER THAN 6" UP TO AND INCLUDING 9" IN ANY DIRECTION, TO FINAL POSITION** **LF**

At the following locations:

As Directed By Con Edison Representative

Total Quantity for JB 402B.2A = 120

JB 402B.2B **EXISTING TRANSMISSION FACILITY 6" TO 12" DIAM, ADJUSTED GREATER THAN 6" UP TO AND INCLUDING 9" IN ANY DIRECTION, TO FINAL POSITION** **LF**

At the following locations:

As Directed By Con Edison Representative

Total Quantity for JB 402B.2B = 180

JB 402B.3A **EXISTING TRANSMISSION FACILITY UP TO 6" DIAM, ADJUSTED GREATER THAN 9" UP TO AND INCLUDING 12" IN ANY DIRECTION, TO FINAL POSITION** **LF**

At the following locations:

As Directed By Con Edison Representative

Total Quantity for JB 402B.3A = 200

JB 402B.3B **EXISTING TRANSMISSION FACILITY 6" TO 12" DIAM, ADJUSTED GREATER THAN 9" UP TO AND INCLUDING 12" IN ANY DIRECTION, TO FINAL POSITION** **LF**

At the following locations:

As Directed By Con Edison Representative

Total Quantity for JB 402B.3B = 300

JB 403 **PLACING STEEL PROTECTION PLATES FOR UTILITY FACILITIES** **SF**

At the following locations:

AS ENCOUNTERED AND AS DIRECTED BY CON EDISON REPRESENTATIVE

Total Quantity for JB 403 = 2,200

CON EDISON JOINT BIDDING SCOPE OF WORK
SUPPORT AND PROTECTION
SANDRESPC
EAST SIDE COASTAL RESILIENCY
BOROUGH OF MANHATTAN

JB 404 **PIER AND/OR PLATE METHOD OF PROTECTION FOR DUCTILE IRON WATER MAIN WITH LESS THAN 24" COVER** **SF**

At the following locations:

AS ENCOUNTERED AND AS DIRECTED BY CON EDISON REPRESENTATIVE

Total Quantity for JB 404 = 600

JB 405.1 **EXCAVATION FOR INSTALLATION OF UTILITY FACILITIES WITH TOTAL DEPTHS LESS THAN 5 FEET** **CY**

At the following locations:

AS ENCOUNTERED AND AS DIRECTED BY CON EDISON REPRESENTATIVE

Total Quantity for JB 405.1 = 4,010

JB 405.2 **EXCAVATION FOR INSTALLATION OF UTILITY FACILITIES WITH TOTAL DEPTHS EQUAL OR GREATER THAN 5 FEET** **CY**

At the following locations:

AS ENCOUNTERED AND AS DIRECTED BY CON EDISON REPRESENTATIVE

Total Quantity for JB 405.2 = 2,315

JB 406 **EXCAVATION FOR UTILITY STRUCTURE** **CY**

At the following locations:

AS ENCOUNTERED AND AS DIRECTED BY CON EDISON REPRESENTATIVE

Total Quantity for JB 406 = 4,015

JB 410.1 **MASS EXCAVATION (VOLUME UP TO AND INCLUDING 20%) FROM TOP OF ROADWAY LESS THAN 5 FT DEEP** **CY**

At the following locations:

AS ENCOUNTERED AND AS DIRECTED BY CON EDISON REPRESENTATIVE

Total Quantity for JB 410.1 = 1,240

CON EDISON JOINT BIDDING SCOPE OF WORK
SUPPORT AND PROTECTION
SANDRESPC
EAST SIDE COASTAL RESILIENCY
BOROUGH OF MANHATTAN

JB 410.2 **MASS EXCAVATION (VOLUME OVER 20% UP TO AND INCLUDING 40%) FROM TOP OF ROADWAY LESS THAN 5 FT DEEP** **CY**

At the following locations:

AS ENCOUNTERED AND AS DIRECTED BY CON EDISON REPRESENTATIVE

Total Quantity for JB 410.2 = 874

JB 410.5 **MASS EXCAVATION (VOLUME UP TO AND INCLUDING 20%) FROM TOP OF ROADWAY EQUAL OR GREATER THAN 5 FT** **CY**

At the following locations:

AS ENCOUNTERED AND AS DIRECTED BY CON EDISON REPRESENTATIVE

Total Quantity for JB 410.5 = 500

JB 410.6 **MASS EXCAVATION (VOLUME OVER 20% UP TO AND INCLUDING 40%) FROM TOP OF ROADWAY EQUAL OR GREATER THAN 5 FT** **CY**

At the following locations:

AS ENCOUNTERED AND AS DIRECTED BY CON EDISON REPRESENTATIVE

Total Quantity for JB 410.6 = 250

JB 450.1 **CONSTRUCTION FIELD SUPPORT REQUIRING AVERAGE SIZE SURVEY CREW PERFORMING TYPICAL SURVEY FUNCTIONS (TYPE .1)** **CRHRS**

At the following locations:

AS DIRECTED BY CON EDISON REPRESENTATIVE

Total Quantity for JB 450.1 = 256

JB 450.2 **CONSTRUCTION FIELD SUPPORT REQUIRING AVERAGE SMALL SIZE CREW CAPABLE OF PERFORMING VARIOUS TASKS (TYPE .2)** **CRHRS**

At the following locations:

AS DIRECTED BY CON EDISON REPRESENTATIVE

Total Quantity for JB 450.2 = 3,408

CON EDISON JOINT BIDDING SCOPE OF WORK
SUPPORT AND PROTECTION
SANDRESPC
EAST SIDE COASTAL RESILIENCY
BOROUGH OF MANHATTAN

JB 450.3 **CONSTRUCTION FIELD SUPPORT REQUIRING AVERAGE MEDIUM SIZE CREW CAPABLE OF PERFORMING VARIOUS TASKS (TYPE .3)** **CRHRS**

At the following locations:

AS DIRECTED BY CON EDISON REPRESENTATIVE

Total Quantity for JB 450.3 = 5,408

JB 500 **REMOVAL OF ABANDONED UTILITY CONDUITS (NON-CONCRETE ENCASED)** **LF**

At the following locations:

AS ENCOUNTERED AND AS DIRECTED BY CON EDISON REPRESENTATIVE

Total Quantity for JB 500 = 10,530

JB 500.1 **REMOVAL OF ABANDONED PVC CABLE TELEVISION DUCT BANKS ATTACHED TO THE PAVEMENT BASE, CONCRETE ENCASED** **LF**

At the following locations:

AS ENCOUNTERED AND AS DIRECTED BY CON EDISON REPRESENTATIVE

Total Quantity for JB 500.1 = 3,510

JB 501 **REMOVAL OF ABANDONED MASONRY FOR ELEC. AND TEL. FACILITIES** **CY**

At the following locations:

AS ENCOUNTERED AND AS DIRECTED BY CON EDISON REPRESENTATIVE

Total Quantity for JB 501 = 60

JB 603E.1 **INSTALL UTILITY CONDUITS PLACED IN FINAL POSITION WITHOUT CONCRETE ENCASEMENT** **LF**

At the following locations:

AS DIRECTED BY CON EDISON REPRESENTATIVE

Total Quantity for JB 603E.1 = 17,566

CON EDISON JOINT BIDDING SCOPE OF WORK
SUPPORT AND PROTECTION
SANDRESPC
EAST SIDE COASTAL RESILIENCY
BOROUGH OF MANHATTAN

JB 603E.2 **INSTALL UTILITY CONDUITS PLACED IN FINAL POSITION WITH CONCRETE ENCASEMENT** **LF**

At the following locations:

AS DIRECTED BY CON EDISON REPRESENTATIVE

Total Quantity for JB 603E.2 = 40,987

JB 610.3 **INSTALLATION OF STEEL GAS PIPE - 3" DIAMETER** **LF**

At the following locations:

AS DIRECTED BY CON EDISON REPRESENTATIVE

Total Quantity for JB 610.3 = 300

JB 610.4 **INSTALLATION OF STEEL GAS PIPE - 4" DIAMETER** **LF**

At the following locations:

AS DIRECTED BY CON EDISON REPRESENTATIVE

Total Quantity for JB 610.4 = 280

JB 610.6 **INSTALLATION OF STEEL GAS PIPE - 6" DIAMETER** **LF**

At the following locations:

AS DIRECTED BY CON EDISON REPRESENTATIVE

Total Quantity for JB 610.6 = 138

JB 610.8 **INSTALLATION OF STEEL GAS PIPE - 8" DIAMETER** **LF**

At the following locations:

AS DIRECTED BY CON EDISON REPRESENTATIVE

Total Quantity for JB 610.8 = 60

CON EDISON JOINT BIDDING SCOPE OF WORK
SUPPORT AND PROTECTION
SANDRESPC
EAST SIDE COASTAL RESILIENCY
BOROUGH OF MANHATTAN

JB 610.12 **INSTALLATION OF STEEL GAS PIPE - 12" DIAMETER** **LF**

At the following locations:

AS DIRECTED BY CON EDISON REPRESENTATIVE

Total Quantity for JB 610.12 = 460

JB 611.3 **INSTALLATION OF STEEL GAS PIPE FITTING - 3" DIAMETER** **EA**

At the following locations:

AS DIRECTED BY CON EDISON REPRESENTATIVE

Total Quantity for JB 611.3 = 6

JB 611.4 **INSTALLATION OF STEEL GAS PIPE FITTING - 4" DIAMETER** **EA**

At the following locations:

AS DIRECTED BY CON EDISON REPRESENTATIVE

Total Quantity for JB 611.4 = 6

JB 611.6 **INSTALLATION OF STEEL GAS PIPE FITTING - 6" DIAMETER** **EA**

At the following locations:

AS DIRECTED BY CON EDISON REPRESENTATIVE

Total Quantity for JB 611.6 = 14

JB 611.8 **INSTALLATION OF STEEL GAS PIPE FITTING - 8" DIAMETER** **EA**

At the following locations:

AS DIRECTED BY CON EDISON REPRESENTATIVE

Total Quantity for JB 611.8 = 4

CON EDISON JOINT BIDDING SCOPE OF WORK
SUPPORT AND PROTECTION
SANDRESPC
EAST SIDE COASTAL RESILIENCY
BOROUGH OF MANHATTAN

JB 611.12 **INSTALLATION OF STEEL GAS PIPE FITTING - 12" DIAMETER** **EA**

At the following locations:

AS DIRECTED BY CON EDISON REPRESENTATIVE

Total Quantity for JB 611.12 = 20

JB 615.2 **INSTALLATION OF PLASTIC GAS PIPE - 2" DIAMETER** **LF**

At the following locations:

AS DIRECTED BY CON EDISON REPRESENTATIVE

Total Quantity for JB 615.2 = 80

JB 615.3 **INSTALLATION OF PLASTIC GAS PIPE - 3" DIAMETER** **LF**

At the following locations:

AS DIRECTED BY CON EDISON REPRESENTATIVE

Total Quantity for JB 615.3 = 40

JB 615.6 **INSTALLATION OF PLASTIC GAS PIPE - 6" DIAMETER** **LF**

At the following locations:

AS DIRECTED BY CON EDISON REPRESENTATIVE

Total Quantity for JB 615.6 = 450

JB 615.12 **INSTALLATION OF PLASTIC GAS PIPE - 12" DIAMETER** **LF**

At the following locations:

AS DIRECTED BY CON EDISON REPRESENTATIVE

Total Quantity for JB 615.12 = 780

CON EDISON JOINT BIDDING SCOPE OF WORK
SUPPORT AND PROTECTION
SANDRESPC
EAST SIDE COASTAL RESILIENCY
BOROUGH OF MANHATTAN

JB 616.2 **INSTALLATION OF PLASTIC GAS PIPE FITTING - 2" DIAMETER** **EA**

At the following locations:

AS DIRECTED BY CON EDISON REPRESENTATIVE

Total Quantity for JB 616.2 = 4

JB 616.3 **INSTALLATION OF PLASTIC GAS PIPE FITTING - 3" DIAMETER** **EA**

At the following locations:

AS DIRECTED BY CON EDISON REPRESENTATIVE

Total Quantity for JB 616.3 = 3

JB 616.6 **INSTALLATION OF PLASTIC GAS PIPE FITTING - 6" DIAMETER** **EA**

At the following locations:

AS DIRECTED BY CON EDISON REPRESENTATIVE

Total Quantity for JB 616.6 = 16

JB 616.12 **INSTALLATION OF PLASTIC GAS PIPE FITTING - 12" DIAMETER** **EA**

At the following locations:

AS DIRECTED BY CON EDISON REPRESENTATIVE

Total Quantity for JB 616.12 = 10

JB 620.12 **INSTALLATION OF STEAM PIPE - 24" DIAMETER** **LF**

At the following locations:

AS DIRECTED BY CON EDISON REPRESENTATIVE

Total Quantity for JB 620.12 = 350

CON EDISON JOINT BIDDING SCOPE OF WORK
SUPPORT AND PROTECTION
SANDRESPC
EAST SIDE COASTAL RESILIENCY
BOROUGH OF MANHATTAN

JB 621.12 **INSTALLATION OF STEAM PIPE FITTING - 24" DIAMETER** **EA**

At the following locations:

AS DIRECTED BY CON EDISON REPRESENTATIVE

Total Quantity for JB 621.12 = 12

JB 625B **INSTALLATION OF STEAM TRAP ASSEMBLY** **EA**

At the following locations:

AS DIRECTED BY CON EDISON REPRESENTATIVE

Total Quantity for JB 625B = 3

JB 625C **INSTALLATION OF STEAM DRAIN ASSEMBLY** **EA**

At the following locations:

AS DIRECTED BY CON EDISON REPRESENTATIVE

Total Quantity for JB 625C = 3

JB 625E **INSTALLATION OF STEAM ANCHOR** **EA**

At the following locations:

AS DIRECTED BY CON EDISON REPRESENTATIVE

Total Quantity for JB 625E = 2

JB 625F **INSTALLATION OF STEAM MANHOLE** **EA**

At the following locations:

AS DIRECTED BY CON EDISON REPRESENTATIVE

Total Quantity for JB 625F = 3

CON EDISON JOINT BIDDING SCOPE OF WORK
SUPPORT AND PROTECTION
SANDRESPC
EAST SIDE COASTAL RESILIENCY
BOROUGH OF MANHATTAN

JB 636 EA **ADJUSTMENT OF UTILITY HARDWARE (UNDER 7" WIDTH)** **EA**

At the following locations:

AS ENCOUNTERED

Total Quantity for JB 636 EA = 10

JB 636 EB **ADJUSTMENT OF UTILITY HARDWARE (7" TO UNDER 14" WIDTH)** **EA**

At the following locations:

AS ENCOUNTERED

Total Quantity for JB 636 EB = 8

JB 636 EC **ADJUSTMENT OF UTILITY HARDWARE (14" TO UNDER 30" WIDTH)** **EA**

At the following locations:

AS ENCOUNTERED

Total Quantity for JB 636 EC = 16

JB 636 ED **ADJUSTMENT OF UTILITY HARDWARE (30" TO UNDER 34" WIDTH)** **EA**

At the following locations:

AS ENCOUNTERED

Total Quantity for JB 636 ED = 8

JB 636 EE **ADJUSTMENT OF UTILITY HARDWARE (34" TO UNDER 41" WIDTH)** **EA**

At the following locations:

AS ENCOUNTERED

Total Quantity for JB 636 EE = 14

CON EDISON JOINT BIDDING SCOPE OF WORK
SUPPORT AND PROTECTION
SANDRESPC
EAST SIDE COASTAL RESILIENCY
BOROUGH OF MANHATTAN

JB 636 EG **ADJUSTMENT OF UTILITY HARDWARE (41" TO UNDER 75" WIDTH)** **EA**

At the following locations:

AS ENCOUNTERED

Total Quantity for JB 636 EG = 15

JB 636 EH **ADJUSTMENT OF UTILITY HARDWARE (75" TO UNDER 125" WIDTH)** **EA**

At the following locations:

AS ENCOUNTERED

Total Quantity for JB 636 EH = 5

JB 636 EI **ADJUSTMENT OF UTILITY HARDWARE (125" TO UNDER 170" WIDTH)** **EA**

At the following locations:

AS ENCOUNTERED

Total Quantity for JB 636 EI = 8

JB 636 MA **MODIFICATION OF WORK METHODS TO ACCOMMODATE UTILITY HARDWARE (UNDER 7" WIDTH)** **EA**

At the following locations:

AS DIRECTED BY CON EDISON REPRESENTATIVE

Total Quantity for JB 636 MA = 20

JB 636 MB **MODIFICATION OF WORK METHODS TO ACCOMMODATE UTILITY HARDWARE (7" TO UNDER 14" WIDTH)** **EA**

At the following locations:

AS DIRECTED BY CON EDISON REPRESENTATIVE

Total Quantity for JB 636 MB = 16

CON EDISON JOINT BIDDING SCOPE OF WORK
SUPPORT AND PROTECTION
SANDRESPC
EAST SIDE COASTAL RESILIENCY
BOROUGH OF MANHATTAN

JB 636 MC **MODIFICATION OF WORK METHODS TO ACCOMMODATE UTILITY HARDWARE (14" TO UNDER 30" WIDTH)** **EA**

At the following locations:

AS DIRECTED BY CON EDISON REPRESENTATIVE

Total Quantity for JB 636 MC = 16

JB 636 MD **MODIFICATION OF WORK METHODS TO ACCOMMODATE UTILITY HARDWARE (30" TO UNDER 34" WIDTH)** **EA**

At the following locations:

AS DIRECTED BY CON EDISON REPRESENTATIVE

Total Quantity for JB 636 MD = 16

JB 636 ME **MODIFICATION OF WORK METHODS TO ACCOMMODATE UTILITY HARDWARE (34" TO UNDER 41" WIDTH)** **EA**

At the following locations:

AS DIRECTED BY CON EDISON REPRESENTATIVE

Total Quantity for JB 636 ME = 24

JB 636 MG **MODIFICATION OF WORK METHODS TO ACCOMMODATE UTILITY HARDWARE (41" TO UNDER 75" WIDTH)** **EA**

At the following locations:

AS DIRECTED BY CON EDISON REPRESENTATIVE

Total Quantity for JB 636 MG = 30

JB 636 MH **MODIFICATION OF WORK METHODS TO ACCOMMODATE UTILITY HARDWARE (75" TO UNDER 125" WIDTH)** **EA**

At the following locations:

AS DIRECTED BY CON EDISON REPRESENTATIVE

Total Quantity for JB 636 MH = 10

CON EDISON JOINT BIDDING SCOPE OF WORK
SUPPORT AND PROTECTION
SANDRESPC
EAST SIDE COASTAL RESILIENCY
BOROUGH OF MANHATTAN

JB 636 MI **MODIFICATION OF WORK METHODS TO ACCOMMODATE UTILITY HARDWARE (125" TO UNDER 170" WIDTH)** **EA**

At the following locations:

AS DIRECTED BY CON EDISON REPRESENTATIVE

Total Quantity for JB 636 MI = 12

JB 636 R **REPAIR TO UTILITY STRUCTURES** **CY**

At the following locations:

AS DIRECTED BY CON EDISON REPRESENTATIVE

Total Quantity for JB 636 R = 100

JB 636 SA **ADJUSTMENT OF UTILITY STEAM HARDWARE (CONCRETE COLLARS)** **SF**

At the following locations:

AS DIRECTED BY CON EDISON REPRESENTATIVE

Total Quantity for JB 636 SA = 648

JB 636 SB **ADJUSTMENT OF UTILITY STEAM CASTINGS (UNDER AND INCLUDING 8" WIDTH)** **EA**

At the following locations:

AS DIRECTED BY CON EDISON REPRESENTATIVE

Total Quantity for JB 636 SB = 3

JB 636 SC **ADJUSTMENT OF UTILITY STEAM CASTINGS (ABOVE 8" TO 34" WIDTH)** **EA**

At the following locations:

AS DIRECTED BY CON EDISON REPRESENTATIVE

Total Quantity for JB 636 SC = 4

CON EDISON JOINT BIDDING SCOPE OF WORK
SUPPORT AND PROTECTION
SANDRESPC
EAST SIDE COASTAL RESILIENCY
BOROUGH OF MANHATTAN

JB 636 SMB	**MODIFICATION OF WORK METHODS TO ACCOMMODATE UTILITY STEAM HARDWARE (UNDER AND INCLUDING 8" WIDTH)** *At the following locations:* AS DIRECTED BY CON EDISON REPRESENTATIVE **Total Quantity for JB 636 SMB = 5**	**EA**
JB 636 SMC	**MODIFICATION OF WORK METHODS TO ACCOMMODATE UTILITY STEAM HARDWARE (ABOVE 8" TO 34" WIDTH)** *At the following locations:* AS DIRECTED BY CON EDISON REPRESENTATIVE **Total Quantity for JB 636 SMC = 6**	**EA**
JB 638 N	**INSTALLATION OF FIELD CONSTRUCTED UTILITY STRUCTURE** *At the following locations:* AS DIRECTED BY CON EDISON REPRESENTATIVE **Total Quantity for JB 638 N = 1,020**	**CY**
JB 638 R	**BREAK OUT AND REMOVE UTILITY STRUCTURE** *At the following locations:* AS DIRECTED BY CON EDISON REPRESENTATIVE **Total Quantity for JB 638 R = 850**	**CY**
JB 700	**SPECIAL MODIFICATION OF WORK METHODS TO ACCOMMODATE/PROTECT UNDERGROUND FACILITIES WITH LIMITED COVER** *At the following locations:* AS ENCOUNTERED AND AS DIRECTED BY CON EDISON REPRESENTATIVE **Total Quantity for JB 700 = 220**	**CY**

CON EDISON JOINT BIDDING SCOPE OF WORK
SUPPORT AND PROTECTION
SANDRESPC
EAST SIDE COASTAL RESILIENCY
BOROUGH OF MANHATTAN

JB 710.3 **REMOVAL OF ABANDONED UTILITY STEEL/CAST IRON/PLASTIC, OVER 20" DIAMETER PIPES** **LF**

At the following locations:

AS ENCOUNTERED AND AS DIRECTED BY CON EDISON REPRESENTATIVE

Total Quantity for JB 710.3 = 150

JB 711 **USE SHEETING LINE AS FORM** **LF**

At the following locations:

AS ENCOUNTERED AND AS DIRECTED BY CON EDISON REPRESENTATIVE

Total Quantity for JB 711 = 800

JB 800 **MODIFICATION OF CONCRETE YOKE TROLLEY STRUCTURES REMOVAL WHEN CROSSING UTILITY FACILITIES** **LF**

At the following locations:

AS ENCOUNTERED

Total Quantity for JB 800 = 280

JB 801 **MODIFICATION OF CONCRETE YOKE TROLLEY STRUCTURES REMOVAL PARALLEL TO UTILITY FACILITIES** **LF**

At the following locations:

AS ENCOUNTERED

Total Quantity for JB 801 = 300

JB 803.1 **LINE CUT BY PNEUMATIC TOOLS IN LIEU OF SAW CUT ASSOCIATED WITH RDWY REMOVAL (LINE CUT ASPHALT ROADWAY)** **LF**

At the following locations:

AS ENCOUNTERED AND AS DIRECTED BY CON EDISON REPRESENTATIVE

Total Quantity for JB 803.1 = 200

CON EDISON JOINT BIDDING SCOPE OF WORK
SUPPORT AND PROTECTION
SANDRESPC
EAST SIDE COASTAL RESILIENCY
BOROUGH OF MANHATTAN

JB 803.2 **LINE CUT BY PNEUMATIC TOOLS IN LIEU OF SAW CUT ASSOCIATED WITH RDWY REMOVAL (LINE CUT ASPHALT AND CONCRETE ROADWAY)** **LF**

At the following locations:

AS ENCOUNTERED AND AS DIRECTED BY CON EDISON REPRESENTATIVE

Total Quantity for JB 803.2 = 280

JB 803.3 **LINE CUT BY PNEUMATIC TOOLS IN LIEU OF SAW CUT ASSOCIATED WITH RDWY REMOVAL (LINE CUT ASPHALT, CONCRETE, AND BELGIUM BLOCK)** **LF**

At the following locations:

AS ENCOUNTERED AND AS DIRECTED BY CON EDISON REPRESENTATIVE

Total Quantity for JB 803.3 = 420

JB 850 **INSTALLATION OF RUBBER SHEETS FOR UTILITY FACILITIES** **SF**

At the following locations:

AS DIRECTED BY CON EDISON REPRESENTATIVE

Total Quantity for JB 850 = 200

JB 900 **EXTRA UTILITY WORK COSTS ALLOWANCE** **FS**

At the following locations:

AS ENCOUNTERED

Total Quantity for JB 900 = 1

JB 1006V **6" VERTICAL OR ROLLED WATER MAIN OFFSET** **EA**

At the following locations:

AS DIRECTED BY CON EDISON REPRESENTATIVE

Total Quantity for JB 1006V = 8

CON EDISON JOINT BIDDING SCOPE OF WORK
SUPPORT AND PROTECTION
SANDRESPC
EAST SIDE COASTAL RESILIENCY
BOROUGH OF MANHATTAN

JB 1008V **8" VERTICAL OR ROLLED WATER MAIN OFFSET** **EA**

At the following locations:

AS DIRECTED BY CON EDISON REPRESENTATIVE

Total Quantity for JB 1008V = 2

JB 1012V **12" VERTICAL OR ROLLED WATER MAIN OFFSET** **EA**

At the following locations:

AS DIRECTED BY CON EDISON REPRESENTATIVE

Total Quantity for JB 1012V = 6

JB 1020V **20" VERTICAL OR ROLLED WATER MAIN OFFSET** **EA**

At the following locations:

AS ENCOUNTERED AND AS DIRECTED BY CON EDISON REPRESENTATIVE

Total Quantity for JB 1020V = 4

CON EDISON CONTRACT INCLUSION ANALYSIS
CITY BID ITEMS ESTIMATED QUANTITIES
SANDRESPC
EAST SIDE COASTAL RESILIENCY
BOROUGH OF MANHATTAN

CITY BID ITEM NUMBER	DESCRIPTION	UNIT	TOTAL QUANTITY
4.01 RAE	ASPHALT MACADAM PAVEMENT, 4" THICK	SY	1,150
4.02 AG	ASPHALTIC CONCRETE WEARING COURSE, 3" THICK	SY	8,298
4.02 CB	ASPHALTIC CONCRETE MIXTURE (TEMPORARY PAVEMENT)	TON	54
4.04 AC	CONCRETE BASE FOR PAVEMENT, 6" THICK	CY	758
4.04 HC	CONCRETE BASE FOR PAVEMENT, 8" THICK (HIGH-EARLY STRENGTH)	CY	96
4.07 CB	NEW GRANITE CURB, STRAIGHT	LF	150
4.07 CC	NEW GRANITE CURB, CORNER	LF	50
4.08 AA	CONCRETE CURB (18" DEEP)	LF	660
4.09 AD	STRAIGHT STEEL FACED CONCRETE CURB (18" DEEP)	LF	1,704
4.09 BD	DEPRESSED STEEL FACED CONCRETE CURB (18" DEEP)	LF	341
4.09 CD	CORNER STEEL FACED CONCRETE CURB (18" DEEP)	LF	171
4.13 AAS	4" CONCRETE SIDEWALK (UNPIGMENTED)	SF	4,134
4.13 BAS	7" CONCRETE SIDEWALK (UNPIGMENTED)	SF	450
4.15	TOPSOIL	CY	50
6.02 AAN	UNCLASSIFIED EXCAVATION	CY	730
6.25 RS	TEMPORARY SIGNS	SF	250
6.28 AA	LIGHTED TIMBER BARRICADES	LF	1,100

CON EDISON CONTRACT INCLUSION ANALYSIS
CITY BID ITEMS ESTIMATED QUANTITIES

SANDRESPC

EAST SIDE COASTAL RESILIENCY
BOROUGH OF MANHATTAN

CITY BID ITEM NUMBER	DESCRIPTION	UNIT	TOTAL QUANTITY
6.55	SAWCUTTING EXISTING PAVEMENT	LF	12,986
6.87	PLASTIC BARRELS	EA	250
7.30 B	REMOVAL OF TROLLEY TRACK	LF	500
7.36	PEDESTRIAN STEEL BARRICADES	LF	800
8.02 A	SPECIAL CARE EXCAVATION AND RESTORATION FOR SIDEWALK WORK	SF	800
8.02 B	SPECIAL CARE EXCAVATION AND RESTORATION FOR CURB WORK	LF	400
9.99	FLASHING ARROW BOARD	EA	6
70.81CB	CLEAN BACKFILL	CY	2,298
73.41AG	ADDITIONAL SELECT GRANULAR BACKFILL	CY	1,149

CON EDISON JOINT BIDDING SCOPE OF WORK
CITY BID ITEMS FOR INCLUSION IN
SANDRESPC
EAST SIDE COASTAL RESILIENCY
BOROUGH OF MANHATTAN

4.01 RAE	**ASPHALT MACADAM PAVEMENT, 4" THICK**	**SY**
	At the following locations:	
	As Encountered	
	Total Quantity for 4.01 RAE = 1,150	
4.02 AG	**ASPHALTIC CONCRETE WEARING COURSE, 3" THICK**	**SY**
	At the following locations:	
	As Encountered	
	Total Quantity for 4.02 AG = 8,298	
4.02 CB	**ASPHALTIC CONCRETE MIXTURE (TEMPORARY PAVEMENT)**	**TON**
	At the following locations:	
	As Directed By Con Edison Representative	
	Total Quantity for 4.02 CB = 54	
4.04 AC	**CONCRETE BASE FOR PAVEMENT, 6" THICK**	**CY**
	At the following locations:	
	As Encountered	
	Total Quantity for 4.04 AC = 758	
4.04 HC	**CONCRETE BASE FOR PAVEMENT, 8" THICK (HIGH-EARLY STRENGTH)**	**CY**
	At the following locations:	
	As Encountered	
	Total Quantity for 4.04 HC = 96	
4.07 CB	**NEW GRANITE CURB, STRAIGHT**	**LF**
	At the following locations:	
	As Encountered	
	Total Quantity for 4.07 CB = 150	

CON EDISON JOINT BIDDING SCOPE OF WORK
CITY BID ITEMS FOR INCLUSION IN
SANDRESPC
EAST SIDE COASTAL RESILIENCY
BOROUGH OF MANHATTAN

4.07 CC	**NEW GRANITE CURB, CORNER**	**LF**
	At the following locations:	
	As Encountered	
	Total Quantity for 4.07 CC = 50	
4.08 AA	**CONCRETE CURB (18" DEEP)**	**LF**
	At the following locations:	
	As Encountered	
	Total Quantity for 4.08 AA = 660	
4.09 AD	**STRAIGHT STEEL FACED CONCRETE CURB (18" DEEP)**	**LF**
	At the following locations:	
	As Encountered	
	Total Quantity for 4.09 AD = 1,704	
4.09 BD	**DEPRESSED STEEL FACED CONCRETE CURB (18" DEEP)**	**LF**
	At the following locations:	
	As Encountered	
	Total Quantity for 4.09 BD = 341	
4.09 CD	**CORNER STEEL FACED CONCRETE CURB (18" DEEP)**	**LF**
	At the following locations:	
	As Encountered	
	Total Quantity for 4.09 CD = 171	
4.13 AAS	**4" CONCRETE SIDEWALK (UNPIGMENTED)**	**SF**
	At the following locations:	
	As Encountered	
	Total Quantity for 4.13 AAS = 4,134	

CON EDISON JOINT BIDDING SCOPE OF WORK
CITY BID ITEMS FOR INCLUSION IN
SANDRESPC
EAST SIDE COASTAL RESILIENCY
BOROUGH OF MANHATTAN

4.13 BAS	**7" CONCRETE SIDEWALK (UNPIGMENTED)**	**SF**
	At the following locations:	
	As Encountered	
	Total Quantity for 4.13 BAS = 450	
4.15	**TOPSOIL**	**CY**
	At the following locations:	
	As Encountered and As Directed By Con Edison Representative	
	Total Quantity for 4.15 = 50	
6.02 AAN	**UNCLASSIFIED EXCAVATION**	**CY**
	At the following locations:	
	As Encountered and As Directed By Con Edison Representative	
	Total Quantity for 6.02 AAN = 730	
6.25 RS	**TEMPORARY SIGNS**	**SF**
	At the following locations:	
	As Directed By Con Edison Representative	
	Total Quantity for 6.25 RS = 250	
6.28 AA	**LIGHTED TIMBER BARRICADES**	**LF**
	At the following locations:	
	As Directed By Con Edison Representative	
	Total Quantity for 6.28 AA = 1,100	
6.55	**SAWCUTTING EXISTING PAVEMENT**	**LF**
	At the following locations:	
	As Encountered and As Directed By Con Edison Representative	
	Total Quantity for 6.55 = 12,986	

CON EDISON JOINT BIDDING SCOPE OF WORK
CITY BID ITEMS FOR INCLUSION IN
SANDRESPC
EAST SIDE COASTAL RESILIENCY
BOROUGH OF MANHATTAN

6.87	**PLASTIC BARRELS**	**EA**
	At the following locations:	
	As Directed By Con Edison Representative	
	Total Quantity for 6.87 = 250	
7.30 B	**REMOVAL OF TROLLEY TRACK**	**LF**
	At the following locations:	
	As Encountered	
	Total Quantity for 7.30 B = 500	
7.36	**PEDESTRIAN STEEL BARRICADES**	**LF**
	At the following locations:	
	As Directed By Con Edison Representative	
	Total Quantity for 7.36 = 800	
8.02 A	**SPECIAL CARE EXCAVATION AND RESTORATION FOR SIDEWALK WORK**	**SF**
	At the following locations:	
	As Encountered	
	Total Quantity for 8.02 A = 800	
8.02 B	**SPECIAL CARE EXCAVATION AND RESTORATION FOR CURB WORK**	**LF**
	At the following locations:	
	As Encountered	
	Total Quantity for 8.02 B = 400	
9.99	**FLASHING ARROW BOARD**	**EA**
	At the following locations:	
	As Directed By Con Edison Representative	
	Total Quantity for 9.99 = 6	

CON EDISON JOINT BIDDING SCOPE OF WORK
CITY BID ITEMS FOR INCLUSION IN
SANDRESPC
EAST SIDE COASTAL RESILIENCY
BOROUGH OF MANHATTAN

70.81CB **CLEAN BACKFILL** **CY**

At the following locations:

As Encountered and As Directed By Con Edison Representative

Total Quantity for 70.81CB = 2,298

73.41AG **ADDITIONAL SELECT GRANULAR BACKFILL** **CY**

At the following locations:

As Encountered and As Directed By Con Edison Representative

Total Quantity for 73.41AG = 1,149

ECS **For Information Only** **SEPTEMBER 2020**

SANDRESPC
INSTALLATION OF EAST COAST RESILIENCY
Borough of Manhattan
Schedule JB: Scope of Work for Joint Bid Items

JB ITEM	DESCRIPTION	UNITS	ESTIMATED QUANTITY
JB 100.1	UTILITIES CROSSING TRENCH FOR CATCH BASIN CHUTE CONNECTION AND/OR TEST PIT (TYPE .1)	EA	8
JB 101.1	UTILITIES CROSSING TRENCH FOR SEWERS OVER 12" TO 24" DIAMETER (TYPE .1)	EA	23
JB 101.2	UTILITIES CROSSING TRENCH FOR SEWERS OVER 12" TO 24" DIAMETER (TYPE .2)	EA	5
JB 101.3	UTILITIES CROSSING TRENCH FOR SEWERS OVER 12" TO 24" DIAMETER (TYPE .3)	EA	5
JB 102.1	UTILITIES CROSSING TRENCH FOR SEWERS OVER 24" TO 36" DIAMETER (TYPE .1)	EA	11
JB 103.1	UTILITIES CROSSING TRENCH FOR SEWERS OVER 36" TO 48" DIAMETER (TYPE .1)	EA	5
JB 103.2	UTILITIES CROSSING TRENCH FOR SEWERS OVER 36" TO 48" DIAMETER (TYPE .2)	EA	4
JB 108.1	UTILITIES CROSSING TRENCH FOR WATER MAIN UP TO AND INCLUDING 12" DIAMETER (TYPE .1)	EA	18
JB 108.2	UTILITIES CROSSING TRENCH FOR WATER MAIN UP TO AND INCLUDING 12" DIAMETER (TYPE .2)	EA	8
JB 109.1	UTILITIES CROSSING TRENCH FOR WATER MAIN OVER 12" AND UP TO 24" DIAMETER (TYPE .1)	EA	5
JB 225	INSTALLATION AND REMOVAL OF CATCH BASINS WITH UTILITY INTERFERENCES	EA	5
JB 226	INSTALLATION OF CATCH BASINS WITH INTERFERENCES	EA	5
JB 300	SPECIAL CARE EXCAVATION AND BACKFILLING	CY	55
JB 330T1	SUPPORT AND PROTECTION OF COMMUNICATION UTILITY FACILITIES DURING EXCAVATION OF CITY TRENCH WHEN PARALLELING COMMUNICATION FACILITIES LIE COMPLETELY IN THE PROPOSED CITY TRENCH	LF	1025
JB 400	TEST PITS FOR UTILITY FACILITIES	CY	40
JB 401	TRENCH EXCAVATION FOR ADJUSTMENT OF UTILITY FACILITIES	CY	338
JB 402T.1A	EXISTING CONCRETE ENCASED NON-STEEL/IRON TELECOMMUNICATIONS CONDUITS PLACED IN FINAL POSITION WITH CONCRETE ENCASEMENT	LF	1980

ECS | **For Information Only** | **SEPTEMBER 2020**

SANDRESPC
INSTALLATION OF EAST COAST RESILIENCY
Borough of Manhattan
Schedule JB: Scope of Work for Joint Bid Items

JB 402T.2A	EXISTING NON-CONCRETE ENCASED NON-STEEL/IRON TELECOMMUNICATIONS CONDUITS PLACED IN FINAL POSITION WITH CONCRETE ENCASEMENT	LF	150
JB 402T.R1A	EXISTING CONCRETE ENCASED STEEL/IRON TELECOMMUNICATIONS CONDUITS PLACED IN FINAL POSITION WITH CONCRETE ENCASEMENT	LF	180
JB 402T.V1A	EXISTING VACANT CONCRETE ENCASED TELECOMMUNICATION CONDUITS PLACED IN FINAL POSITION WITH CONCRETE ENCASEMENT	LF	400
JB 403T.1	FURNISH AND INSTALL 1/4" STEEL PROTECTION PLATES FOR TELECOMMUNICATIONS FACILITIES	SF	200
JB 450.5	CONSTRUCTION FIELD SUPPORT - PIPE RIPPING (TYPE .5)	CrHrs	24
JB 636 EG RD	ADJUSTMENT OF UTILITY HARDWARE (41" TO UNDER 75" WIDTH) IN ROADWAY	EA	12
JB 638NT	INSTALLATION OF FIELD CONSTRUCTED TELEPHONE UTILITY STRUCTURE	CY	15
JB 638R	BREAK OUT AND REMOVE UTILITY STRUCTURE CONTAINING ACTIVE FACILITIES	CY	15
JB 700	SPECIAL MODIFICATION OF WORK METHODS TO ACCOMMODATE/PROTECT UNDERGOUND FACILITIES WITH LIMITED COVER	CY	10
JB 711	USE SHEETING LINE AS FORM	LF	30
JB 803.2	LINE CUT BY PNEUMATIC TOOLS IN LIEU OF SAW CUT ASSOCIATED WITH ASPHALT AND CONCRETE ROADWAY REMOVAL OPERATIONS	LF	100
JB 900	EXTRA UTILITY WORK COSTS ALLOWANCE	LS	1

ECS | **For Information Only** | **SEPTEMBER 2020**

SANDRESPC
INSTALLATION OF EAST COAST RESILIENCY
Borough of Manhattan
Schedule JB: Scope of Work for Joint Bid Items

JB 100.1

UTILITIES CROSSING TRENCH FOR CATCH BASIN CHUTE CONNECTION AND/OR TEST PIT (TYPE .1)

@ THE FOLLOWING LOCATIONS

	QTY(EA)
SEC OF INTERSECTION OF WATER STREET & GOUVERNEUR SLIP EAST	1
SWC OF INTERSECTION OF WATER STREET & JACKSON STREET	2
AS ENCOUNTERED OR DIRECTED BY THE ECS FIELD REPRESENTATIVE	5
JB 100.1 TOTAL	**8**

JB 101.1

UTILITIES CROSSING TRENCH FOR SEWERS OVER 12" TO 24" DIAMETER (TYPE .1)

@ THE FOLLOWING LOCATIONS

	QTY(EA)
EAST SIDE OF GOUVERNEUR SLIP EAST BTWN SOUTH STREET & WATER STREET	4
SOUTH SIDE OF WATER STREET BTWN GOUVERNEUR SLIP EAST & JACKSON STREET	5
SEC OF INTERSECTION OF WATER STREET & JACKSON STREET	2
EAST SIDE OF JACKSON STREET BTWN SOUTH STREET & WATER STREET	1
EAST SIDE OF LEWIS STREET BTWN BROOME STREET & DELANCEY STREET SOUTH	3
WEST SIDE OF AVENUE C BTWN 18TH STREET & 20TH STREET	1
WEST SIDE OF AVENUE C BTWN 20TH STREET & 23RD STREET	4
AS ENCOUNTERED OR DIRECTED BY THE ECS FIELD REPRESENTATIVE	3
JB 101.1 TOTAL	**23**

JB 101.2

UTILITIES CROSSING TRENCH FOR SEWERS OVER 12" TO 24" DIAMETER (TYPE .2)

@ THE FOLLOWING LOCATIONS

	QTY(EA)
SOUTH SIDE OF WATER STREET BTWN GOUVERNEUR SLIP EAST & JACKSON STREET	2
AS ENCOUNTERED OR DIRECTED BY THE ECS FIELD REPRESENTATIVE	3
JB 101.2 TOTAL	**5**

JB 101.3

UTILITIES CROSSING TRENCH FOR SEWERS OVER 12" TO 24" DIAMETER (TYPE .3)

@ THE FOLLOWING LOCATIONS

	QTY(EA)
EAST SIDE OF LEWIS STREET BTWN BROOME STREET & DELANCEY STREET SOUTH	1
AS ENCOUNTERED OR DIRECTED BY THE ECS FIELD REPRESENTATIVE	4
JB 101.3 TOTAL	**5**

ECS | **For Information Only** | **SEPTEMBER 2020**

SANDRESPC
INSTALLATION OF EAST COAST RESILIENCY
Borough of Manhattan
Schedule JB: Scope of Work for Joint Bid Items

JB 102.1

UTILITIES CROSSING TRENCH FOR SEWERS OVER 24" TO 36" DIAMETER (TYPE .1)

@ THE FOLLOWING LOCATIONS

	QTY(EA)
SOUTH SIDE OF EAST HOUSTON STREET BTWN COLUMBIA STREET & BARUCH DRIVE	5
WEST SIDE OF AVENUE C BTWN 20TH STREET & 23RD STREET	2
AS ENCOUNTERED OR DIRECTED BY THE ECS FIELD REPRESENTATIVE	4
JB 102.1 TOTAL	**11**

JB 103.1

UTILITIES CROSSING TRENCH FOR SEWERS OVER 36" TO 48" DIAMETER (TYPE .1)

@ THE FOLLOWING LOCATIONS

	QTY(EA)
NWC OF INTERSECTION OF AVENUE C & 20TH STREET	2
AS ENCOUNTERED OR DIRECTED BY THE ECS FIELD REPRESENTATIVE	3
JB 103.1 TOTAL	**5**

JB 103.2

UTILITIES CROSSING TRENCH FOR SEWERS OVER 36" TO 48" DIAMETER (TYPE .2)

@ THE FOLLOWING LOCATIONS

	QTY(EA)
NWC OF INTERSECTION OF AVENUE C & 20TH STREET	1
AS ENCOUNTERED OR DIRECTED BY THE ECS FIELD REPRESENTATIVE	3
JB 103.2 TOTAL	**4**

JB 108.1

UTILITIES CROSSING TRENCH FOR WATER MAIN UP TO AND INCLUDING 12" DIAMETER (TYPE .1)

@ THE FOLLOWING LOCATIONS

	QTY(EA)
NWC OF INTERSECTION OF SOUTH STREET & GOUVERNEUR SLIP EAST	1
SOUTH SIDE OF WATER STREET BTWN GOUVERNEUR SLIP EAST & JACKSON STREET	1
NORTH SIDE OF WATER STREET BTWN GOUVERNEUR SLIP EAST & JACKSON STREET	4
SEC INTERSECTION OF WATER STREET & EAST GOUVERNEUR SLIP	3
EAST SIDE OF JACKSON STREET BTWN WATER STREET & SOUTH STREET	3
WEST SIDE OF AVENUE C BTWN 20TH STREET & 23RD STREET	1
AS ENCOUNTERED OR DIRECTED BY THE ECS FIELD REPRESENTATIVE	5
JB 108.1 TOTAL	**18**

ECS | **For Information Only** | **SEPTEMBER 2020**

SANDRESPC
INSTALLATION OF EAST COAST RESILIENCY
Borough of Manhattan
Schedule JB: Scope of Work for Joint Bid Items

JB 108.2

UTILITIES CROSSING TRENCH FOR WATER MAIN UP TO AND INCLUDING 12" DIAMETER (TYPE .2)

@ THE FOLLOWING LOCATIONS

	QTY(EA)
SEC OF INTERSECTION OF WATER STREET & JACKSON STREET	2
SWC OF INTERSECTION OF DELANCEY STREET & BARUCH DRIVE	1
NEC INT OF AVENUE C AND 18TH STREET	1
AS ENCOUNTERED OR DIRECTED BY THE ECS FIELD REPRESENTATIVE	4
JB 108.2 TOTAL	**8**

JB 109.1

UTILITIES CROSSING TRENCH FOR WATER MAIN OVER 12" AND UP TO 24" DIAMETER (TYPE .1)

@ THE FOLLOWING LOCATIONS

	QTY(EA)
SOUTH SIDE OF EAST HOUSTON STREET BTWN COLUMBIA STREET & BARUCH DRIVE	1
AS ENCOUNTERED OR DIRECTED BY THE ECS FIELD REPRESENTATIVE	4
JB 109.1 TOTAL	**5**

JB 225

INSTALLATION AND REMOVAL OF CATCH BASINS WITH UTILITY INTERFERENCES

	QTY(EA)
SEC INT OF WATER STREET & GOUVERNEUR SLIP EAST	1
AS ENCOUNTERED OR DIRECTED BY THE ECS FIELD REPRESENTATIVE	4
JB 225 TOTAL	**5**

JB 226

INSTALLATION OF CATCH BASINS WITH INTERFERENCES

	QTY(EA)
SWC OF INTERSECTION OF AVENUE C & E 20TH STREET	1
AS ENCOUNTERED OR DIRECTED BY THE ECS FIELD REPRESENTATIVE	4
JB 226 TOTAL	**5**

JB 300

SPECIAL CARE EXCAVATION AND BACKFILLING

	QTY(CY)
EAST SIDE AVENUE C BTWN 20TH STREET & 23RD STREET	34
AS ENCOUNTERED OR DIRECTED BY THE ECS FIELD REPRESENTATIVE	21
JB 300 TOTAL	**55**

ECS For Information Only **SEPTEMBER 2020**

SANDRESPC
INSTALLATION OF EAST COAST RESILIENCY
Borough of Manhattan
Schedule JB: Scope of Work for Joint Bid Items

JB 330T1

SUPPORT AND PROTECTION OF COMMUNICATION UTILITY FACILITIES DURING EXCAVATION OF CITY TRENCH WHEN PARALLELING COMMUNICATION FACILITIES LIE COMPLETELY IN THE PROPOSED CITY TRENCH

	QTY(LF)
SOUTH SIDE OF WATER STREET BTWN GOUVERNEUR SLIP EAST & JACKSON STREET	580
EAST SIDE OF JACSKON STREET BTWN SOUTH STREET & WATER STREET	140
NWC OF INTERSECTION OF AVENUE C & E 20TH STREET	30
WEST SIDE OF AVENUE C BTWN 20TH STREET & 23RD STREET	100
SOUTH SIDE OF E. HOUSTON ST. BTWN COLUMBIA ST. & BARUCH DR.	30
NEC OF INTERSECTION OF BROOME STREET & LEWIS STREET	15
AS ENCOUNTERED OR DIRECTED BY THE ECS FIELD REPRESENTATIVE	130
JB 330T1 TOTAL	**1025**

JB 400

TEST PITS FOR UTILITY FACILITIES

	QTY(CY)
AS ENCOUNTERED OR DIRECTED BY THE ECS FIELD REPRESENTATIVE	40
JB 400 TOTAL	**40**

JB 401

TRENCH EXCAVATION FOR ADJUSTMENT OF UTILITY FACILITIES

@ THE FOLLOWING LOCATIONS

	QTY(CY)
SOUTH SIDE OF WATER STREET BTWN GOUVERNEUR SLIP EAST & JACKSON STREET	34
SOUTH SIDE OF WATER STREET BTWN GOUVERNEUR SLIP EAST & JACKSON STREET	23
SOUTH SIDE OF WATER STREET BTWN GOUVERNEUR SLIP EAST & JACKSON STREET	23
SOUTH SIDE OF WATER STREET BTWN GOUVERNEUR SLIP EAST & JACKSON STREET	23
SWC OF INTERSECTION OF JACKSON STREET & WATER STREET	36
SWC OF INTERSECTION OF JACKSON STREET & WATER STREET	17
W SIDE OF INTERSECTION OF JACKSON STREET & WATER STREET	17
NWC OF INTERSECTION OF AVENUE C & E 20TH STREET	24
WEST SIDE OF AVENUE C BTWN 20TH STREET & 23RD STREET	23
WEST SIDE OF AVENUE C BTWN 20TH STREET & 23RD STREET	18
AS ENCOUNTERED OR DIRECTED BY THE ECS FIELD REPRESENTATIVE	100
JB 401 TOTAL	**338**

JB 402T.1A

EXISTING CONCRETE ENCASED NON-STEEL/IRON TELECOMMUNICATIONS CONDUITS PLACED IN FINAL POSITION WITH CONCRETE ENCASEMENT

@ THE FOLLOWING LOCATIONS

	QTY(LF)
SOUTH SIDE OF WATER STREET BTWN GOUVERNEUR SLIP EAST & JACKSON STREET	240
SOUTH SIDE OF WATER STREET BTWN GOUVERNEUR SLIP EAST & JACKSON STREET	160
SOUTH SIDE OF WATER STREET BTWN GOUVERNEUR SLIP EAST & JACKSON STREET	160
SOUTH SIDE OF WATER STREET BTWN GOUVERNEUR SLIP EAST & JACKSON STREET	160
SWC OF INTERSECTION OF JACKSON STREET & WATER STREET	400
NWC OF INTERSECTION OF AVENUE C & E 20TH STREET	320
W SIDE OF AVENUE C BTWN 20TH STREET & 23RD STREET	120
W SIDE OF AVENUE C BTWN 20TH STREET & 23RD STREET	120
AS ENCOUNTERED OR DIRECTED BY THE ECS FIELD REPRESENTATIVE	300
JB 402T.1A TOTAL	**1980**

ECS For Information Only **SEPTEMBER 2020**

SANDRESPC
INSTALLATION OF EAST COAST RESILIENCY
Borough of Manhattan
Schedule JB: Scope of Work for Joint Bid Items

JB 402T.2A
EXISTING NON-CONCRETE ENCASED NON-STEEL/IRON TELECOMMUNICATIONS CONDUITS PLACED IN FINAL POSITION WITH CONCRETE ENCASEMENT

@ THE FOLLOWING LOCATIONS

	QTY(LF)
SWC INTERSECTION OF JACKSON STREET & WATER STREET	90
AS ENCOUNTERED OR DIRECTED BY THE ECS FIELD REPRESENTATIVE	60
JB 402T.2A TOTAL	**150**

JB 402T.R1A
EXISTING CONCRETE ENCASED STEEL/IRON TELECOMMUNICATIONS CONDUITS PLACED IN FINAL POSITION WITH CONCRETE ENCASEMENT

@ THE FOLLOWING LOCATIONS

	QTY(LF)
W SIDE OF INTERSECTION OF JACKSON STREET & WATER STREET	60
AS ENCOUNTERED OR DIRECTED BY THE ECS FIELD REPRESENTATIVE	120
JB 402T.R1A TOTAL	**180**

JB 402T.V1A
EXISTING VACANT CONCRETE ENCASED TELECOMMUNICATION CONDUITS PLACED IN FINAL POSITION WITH CONCRETE ENCASEMENT

@ THE FOLLOWING LOCATIONS

	QTY(LF)
SOUTH SIDE OF WATER STREET BTWN GOUVERNEUR SLIP EAST & JACKSON STREET	180
SWC OF INTERSECTION OF JACKSON STREET & WATER STREET	120
AS ENCOUNTERED OR DIRECTED BY THE ECS FIELD REPRESENTATIVE	100
JB 402T.V1A TOTAL	**400**

JB 403T.1

FURNISH AND INSTALL 1/4" STEEL PROTECTION PLATES FOR TELECOMMUNICATIONS FACILITIES

@ THE FOLLOWING LOCATIONS

	QTY(SF)
AS ENCOUNTERED & DIRECTED BY THE ECS FIELD REPRESENTATIVE	200
JB 403T.1 TOTAL	**200**

JB 450.5

CONSTRUCTION FIELD SUPPORT - PIPE RIPPING (TYPE .5)

@ THE FOLLOWING LOCATIONS

	QTY(CrHrs)
SWC INT OF WATER STREET & JACKSON STREET	8
AS ENCOUNTERED & DIRECTED BY THE ECS FIELD REPRESENTATIVE	16
JB 450.5 TOTAL	**24**

ECS | **For Information Only** | **SEPTEMBER 2020**

SANDRESPC
INSTALLATION OF EAST COAST RESILIENCY
Borough of Manhattan
Schedule JB: Scope of Work for Joint Bid Items

JB 636 EG RD

ADJUSTMENT OF UTILITY HARDWARE (41" TO UNDER 75" WIDTH) IN ROADWAY

@ THE FOLLOWING LOCATIONS

	QTY(EA)
S SIDE OF WATER STREET BTWN JACKSON STREET & GOUVERNEUR SLIP EAST	2
SWC INT OF JACKSON STREET & WATER STREET	1
SWC INT OF COLUMBIA STREET & EAST HOUSTON STREET	1
S SIDE OF EAST HOUSTON STREET BTWN COLUMBIA STREET & BARUCH DRIVE	1
NWC INT OF EAST 20TH STREET & AVENUE C	1
W SIDE OF AVENUE C BTWN EAST 20TH STREET & 23RD STREET	2
NWC INT OF AVENUE C & EAST 23RD STREET	1
AS ENCOUNTERED & DIRECTED BY THE ECS FIELD REPRESENTATIVE	3
JB 636 EG RD TOTAL	**12**

JB 638NT

INSTALLATION OF FIELD CONSTRUCTED TELEPHONE UTILITY STRUCTURE

@ THE FOLLOWING LOCATIONS

	QTY(CY)
SEC OF INTERSECTION OF JACKSON STREET & WATER STREET	5
AS ENCOUNTERED & DIRECTED BY THE ECS FIELD REPRESENTATIVE	10
JB 638NT TOTAL	**15**

JB 638R

BREAK OUT AND REMOVE UTILITY STRUCTURE CONTAINING ACTIVE FACILITIES

@ THE FOLLOWING LOCATIONS

	QTY(CY)
SEC OF INTERSECTION OF JACKSON STREET & WATER STREET	5
AS ENCOUNTERED & DIRECTED BY THE ECS FIELD REPRESENTATIVE	10
JB 638R TOTAL	**15**

JB 700

SPECIAL MODIFICATION OF WORK METHODS TO ACCOMMODATE/PROTECT UNDERGOUND FACILITIES WITH LIMITED COVER

@ THE FOLLOWING LOCATIONS

	QTY(CY)
AS ENCOUNTERED & DIRECTED BY THE ECS FIELD REPRESENTATIVE	10
JB 700 TOTAL	**10**

JB 711

USE SHEETING LINE AS FORM

@ THE FOLLOWING LOCATIONS

	QTY(LF)
AS ENCOUNTERED & DIRECTED BY THE ECS FIELD REPRESENTATIVE	30
JB 711 TOTAL	**30**

ECS For Information Only **SEPTEMBER 2020**

SANDRESPC
INSTALLATION OF EAST COAST RESILIENCY
Borough of Manhattan
Schedule JB: Scope of Work for Joint Bid Items

JB 803.2

LINE CUT BY PNEUMATIC TOOLS IN LIEU OF SAW CUT ASSOCIATED WITH ASPHALT AND CONCRETE ROADWAY REMOVAL OPERATIONS

@ THE FOLLOWING LOCATIONS

		QTY(LF)
AS ENCOUNTERED & DIRECTED BY THE ECS FIELD REPRESENTATIVE		100
JB 803.2	**TOTAL**	**100**

JB 900

EXTRA UTILITY WORK COSTS ALLOWANCE

@ THE FOLLOWING LOCATIONS

		QTY(LS)
AS ENCOUNTERED & DIRECTED BY THE ECS FIELD REPRESENTATIVE		1
JB 900	**TOTAL**	**1**

ECS For Information Only **SEPTEMBER 2020**

SANDRESPC
INSTALLATION OF EAST COAST RESILIENCY
Borough of Manhattan
Bid Item Accomodation Estimate

ITEM	DESCRIPTION	UNITS	ESTIMATED QUANTITY
4.02 AB-R	ASPHALTIC CONCRETE WEARING COURSE, 1-1/2" THICK	QTY(SY)	202
4.02 CB	ASPHALTIC CONCRETE MIXTURE	QTY(TON)	68
4.04 HC	CONCRETE BASE FOR PAVEMENT, 8" THICK FOR TRENCH RESTORATION (HIGH EARLY STRENGTH)	QTY(CY)	53
6.55	SAWCUTTING EXISTING PAVEMENT	QTY(LF)	780

ECS For Information Only **SEPTEMBER 2020**

SANDRESPC
INSTALLATION OF EAST COAST RESILIENCY
Borough of Manhattan
Bid Item Accommodation Scope

4.02 AB-R

ASPHALTIC CONCRETE WEARING COURSE, 1-1/2" THICK

@ THE FOLLOWING LOCATIONS

		QTY(SY)
SOUTH SIDE OF WATER STREET BTWN GOUVERNEUR SLIP EAST & JACKSON STREET		100
SWC OF INTERSECTION OF JACKSON STREET & WATER STREET		27
SWC OF INTERSECTION OF JACKSON STREET & WATER STREET		17
W SIDE OF INTERSECTION OF JACKSON STREET & WATER STREET		17
NWC OF INTERSECTION OF AVENUE C & E 20TH STREET		18
WEST SIDE OF AVENUE C BTWN 20TH STREET & 23RD STREET		23
4.02 AB-R	**TOTAL**	**202**

4.02 CB

ASPHALTIC CONCRETE MIXTURE

@ THE FOLLOWING LOCATIONS

		QTY(TON)
SOUTH SIDE OF WATER STREET BTWN GOUVERNEUR SLIP EAST & JACKSON STREET		33
SEC OF INTERSECTION OF JACKSON STREET & WATER STREET		9
SEC OF INTERSECTION OF JACKSON STREET & WATER STREET		6
E SIDE OF INTERSECTION OF JACKSON STREET & WATER STREET		6
NWC OF INTERSECTION OF AVENUE C & E 20TH STREET		6
WEST SIDE OF AVENUE C BTWN 20TH STREET & 23RD STREET		8
4.02 CB	**TOTAL**	**68**

4.04 HC

CONCRETE BASE FOR PAVEMENT, 8" THICK FOR TRENCH RESTORATION (HIGH EARLY STRENGTH)

@ THE FOLLOWING LOCATIONS

		QTY(CY)
SOUTH SIDE OF WATER STREET BTWN GOUVERNEUR SLIP EAST & JACKSON STREET		25
SEC OF INTERSECTION OF JACKSON STREET & WATER STREET		7
SEC OF INTERSECTION OF JACKSON STREET & WATER STREET		5
E SIDE OF INTERSECTION OF JACKSON STREET & WATER STREET		5
NWC OF INTERSECTION OF AVENUE C & E 20TH STREET		5
WEST SIDE OF AVENUE C BTWN 20TH STREET & 23RD STREET		6
4.04 HC	**TOTAL**	**53**

6.55

SAWCUTTING EXISTING PAVEMENT

@ THE FOLLOWING LOCATIONS

		QTY(LF)
SOUTH SIDE OF WATER STREET BTWN GOUVERNEUR SLIP EAST & JACKSON STREET		370
SEC OF INTERSECTION OF JACKSON STREET & WATER STREET		92
SEC OF INTERSECTION OF JACKSON STREET & WATER STREET		70
E SIDE OF INTERSECTION OF JACKSON STREET & WATER STREET		70
NWC OF INTERSECTION OF AVENUE C & E 20TH STREET		88
WEST SIDE OF AVENUE C BTWN 20TH STREET & 23RD STREET		90
6.55	**TOTAL**	**780**

TEST PITS

(1) THESE TEST PITS DETAIL EXISTING CONDITIONS (AS OF BID DATE) OF UTILITIES AND OTHER SUBSURFACE FACILITIES AT LOCATIONS AS SHOWN ON THE TEST PIT LOCATIONS PLAN OF THE CONTRACT DRAWINGS.

(2) DEPTHS OF FACILITIES ARE FROM EXISTING ROADWAY AND SIDEWALK ELEVATIONS AS SHOWN, OFFSETS ARE FROM EXISTING CURB, PROPERTY AND BUILDING LINES, AS SHOWN.

(3) RELEVANT ITEMS ARE NOTED ON EACH TEST PIT DIAGRAM.

(NO TEXT IN THIS SECTION)

EMPIRE CITY SUBWAY

SHEET NO. 1 OF 1

JOB: EAST COAST RESILIENCY PREPARED BY: HENRY READ DATE: 10/2/19

JOB NO: SANDRESPC CHECKED BY: ANDREW MATARAZZO DATE: 10/8/19

TEST PIT # 1 LOCATION: SOUTH SIDE OF WATER STREET BTWN GOUVERNEUR SLIP EAST & JACKSON AVE, MAN

PURPOSE: LOCATE UTILITIES

TRENCH DIMENSIONS
6'-0" X 3'-9" X 2'-2"
TP ITEM 6

ASPHALT – 4"
CONCRETE – 8"

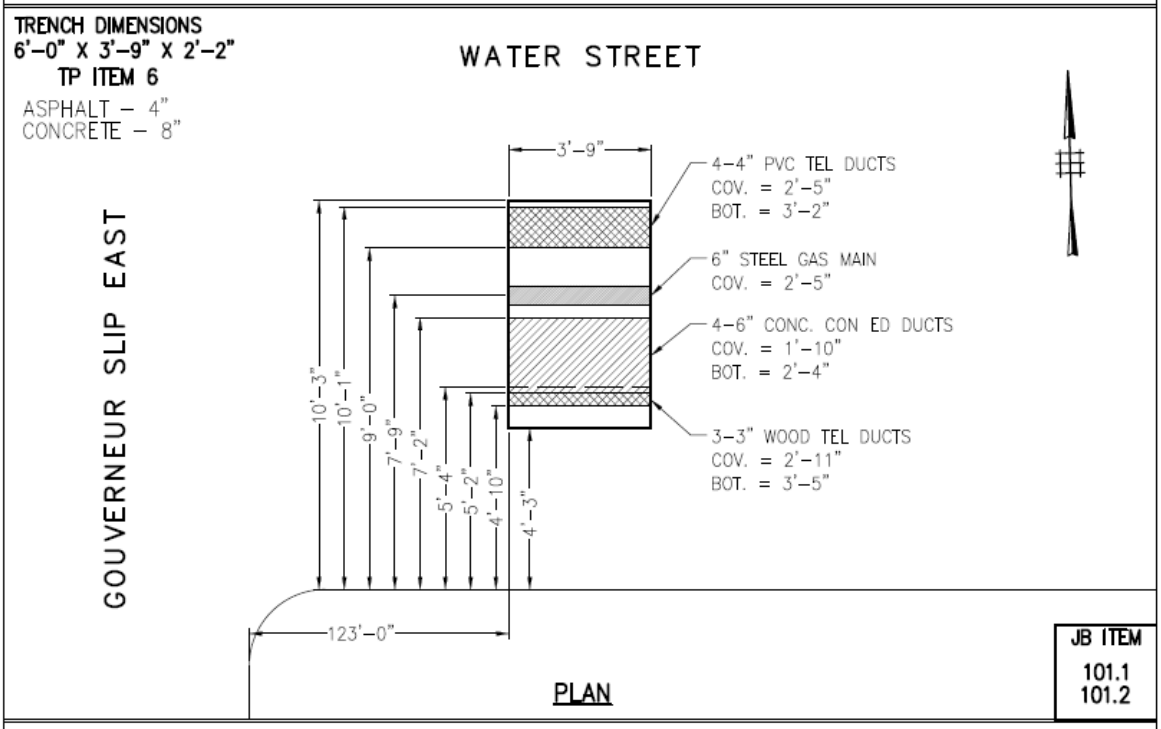

PLAN

JB ITEM
101.1
101.2

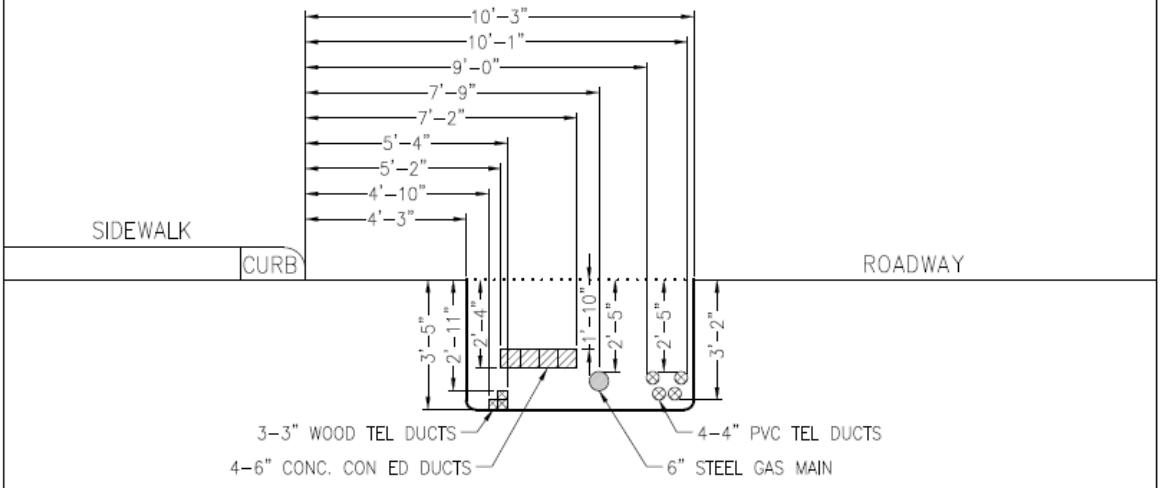

SECTION LOOKING WEST

EMPIRE CITY SUBWAY

SHEET NO. 1 OF 1

JOB: EAST COAST RESILIENCY PREPARED BY: HENRY READ DATE: 10/2/19

JOB NO: SANDRESPC CHECKED BY: ANDREW MATARAZZO DATE: 10/8/19

TEST PIT # 2 LOCATION: SOUTH SIDE OF WATER STREET BTWN

PURPOSE: LOCATE UTILITIES GOUVERNEUR SLIP EAST & JACKSON AVE, MAN

TRENCH DIMENSIONS
6'–0" X 4'–0" X 2'–7"
TP ITEM 6

ASPHALT – 5"
CONCRETE – 5"

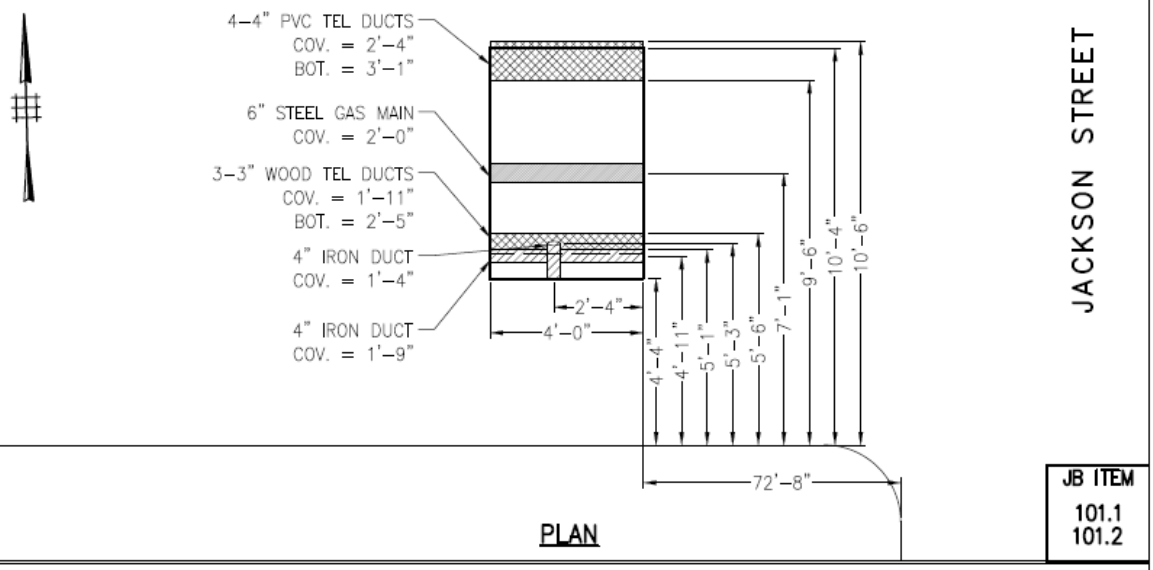

PLAN

JB ITEM
101.1
101.2

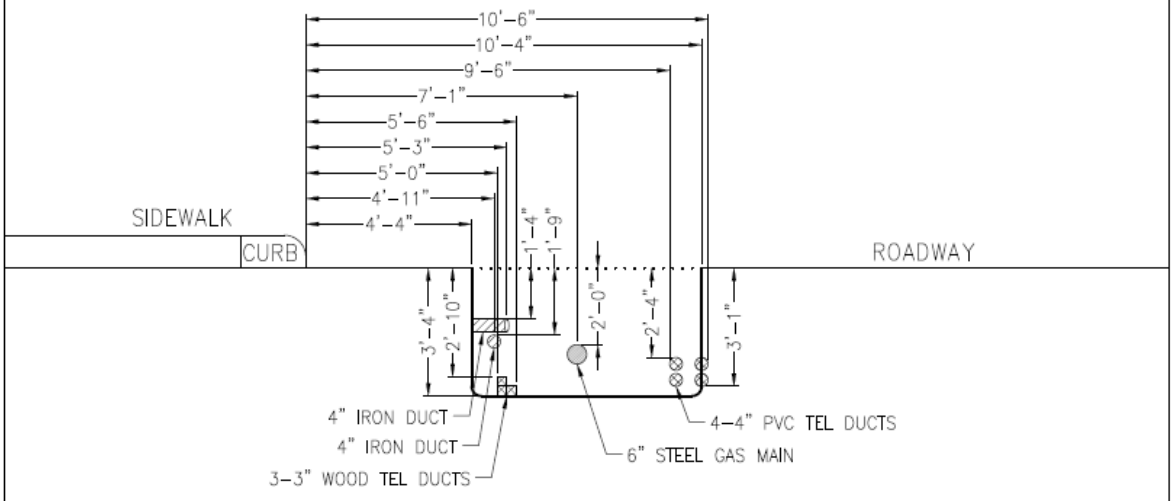

SECTION LOOKING WEST

EMPIRE CITY SUBWAY

SHEET NO. 1 OF 1

JOB: EAST COAST RESILIENCY PREPARED BY: HENRY READ DATE: 10/3/19

JOB NO: SANDRESPC CHECKED BY: ANDREW MATARAZZO DATE: 10/8/19

TEST PIT # 3 LOCATION: WEST SIDE OF BARUCH DRIVE BTWN DELANCEY STREET SOUTH & DELANCEY STREET NORTH, MAN

PURPOSE: LOCATE UTILITIES

TRENCH DIMENSIONS
6'-0" X 4'-0" X 2'-9"
TP ITEM 5
ASPHALT – 4"
CONCRETE – 9"

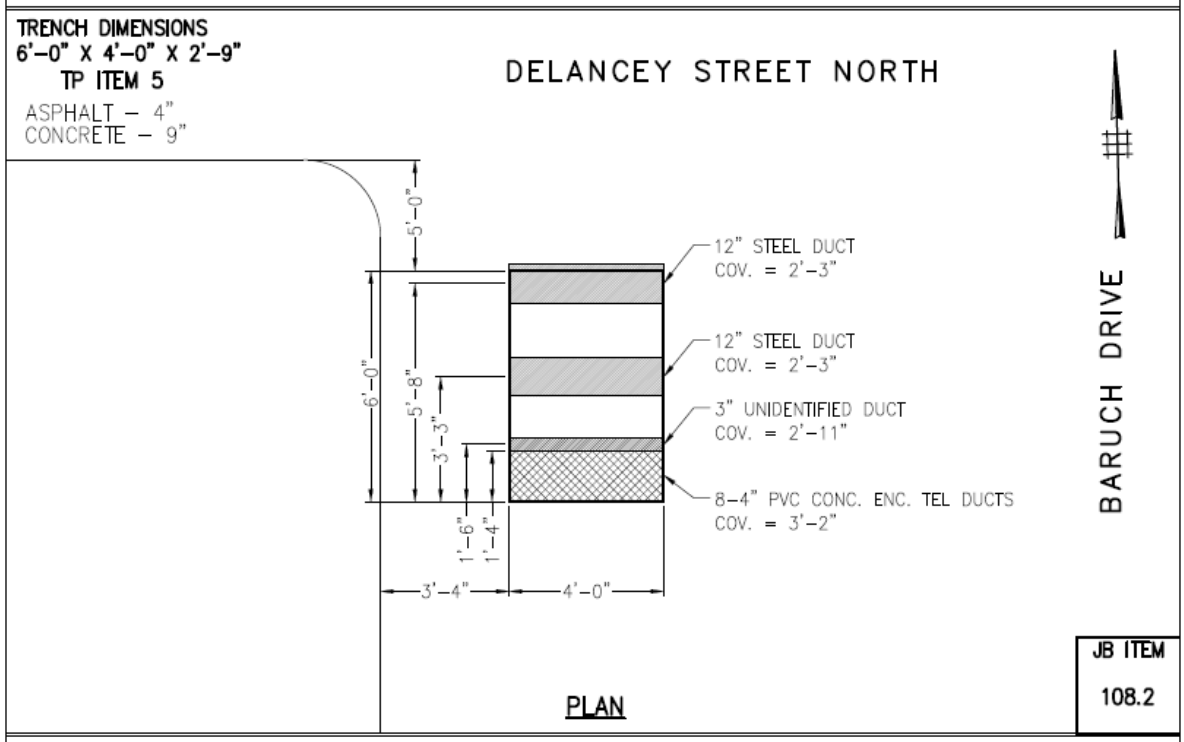

PLAN

JB ITEM
108.2

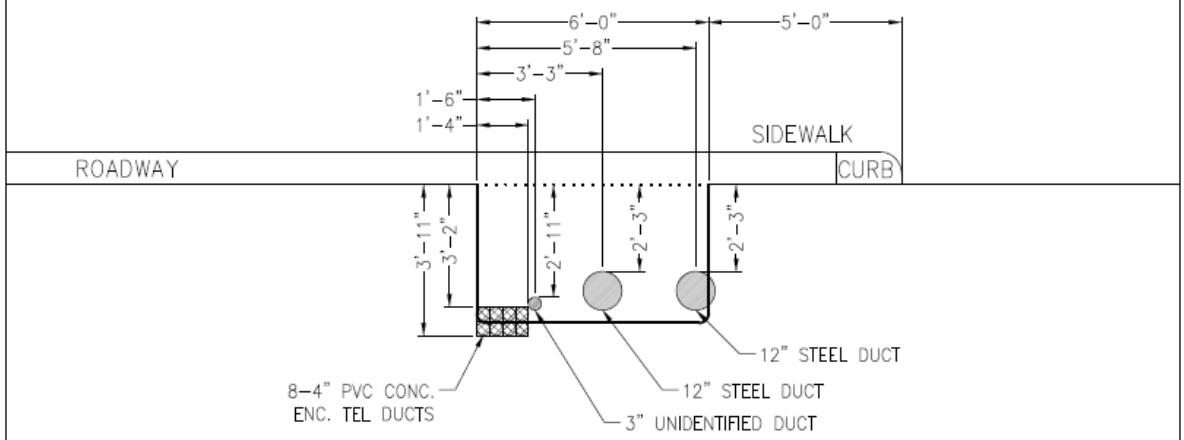

SECTION LOOKING SOUTH

EMPIRE CITY SUBWAY

SHEET NO. 1 OF 1

JOB: EAST COAST RESILIENCY PREPARED BY: HENRY READ DATE: 10/3/19

JOB NO: SANDRESPC CHECKED BY: ANDREW MATARAZZO DATE: 10/8/19

TEST PIT # 4 LOCATION: SOUTH SIDE OF EAST 20TH STREET BTWN 20TH STREET LOOP & AVENUE C, MAN

PURPOSE: LOCATE UTILITIES

TRENCH DIMENSIONS
6'–2" X 4'–0" X 3'–8"
TP ITEM 5

ASPHALT – 6"
CONCRETE – 12"

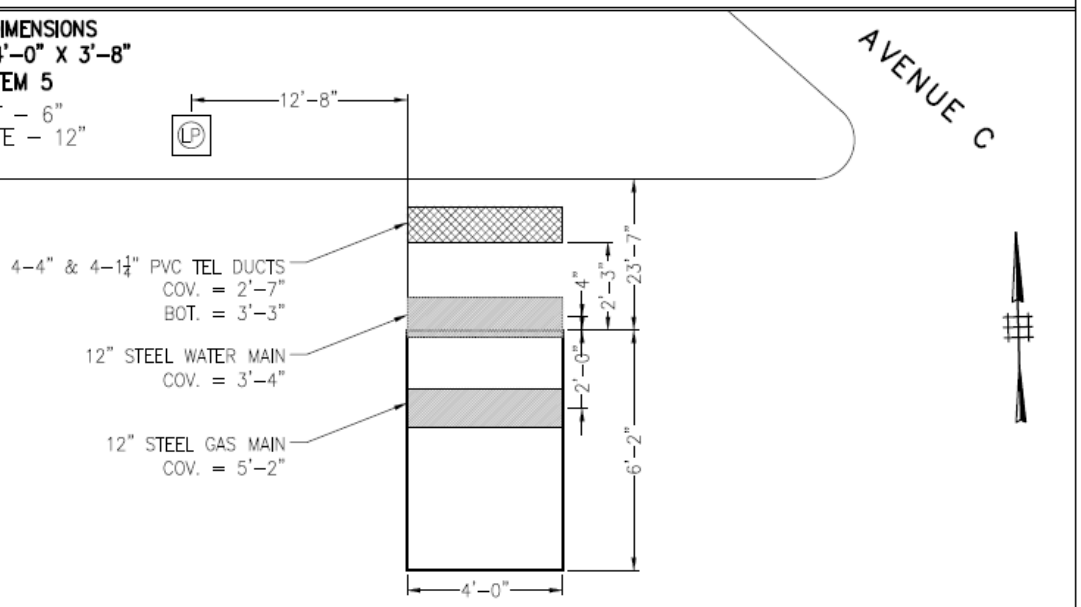

EAST 20TH STREET

PLAN

JB ITEM
103.2

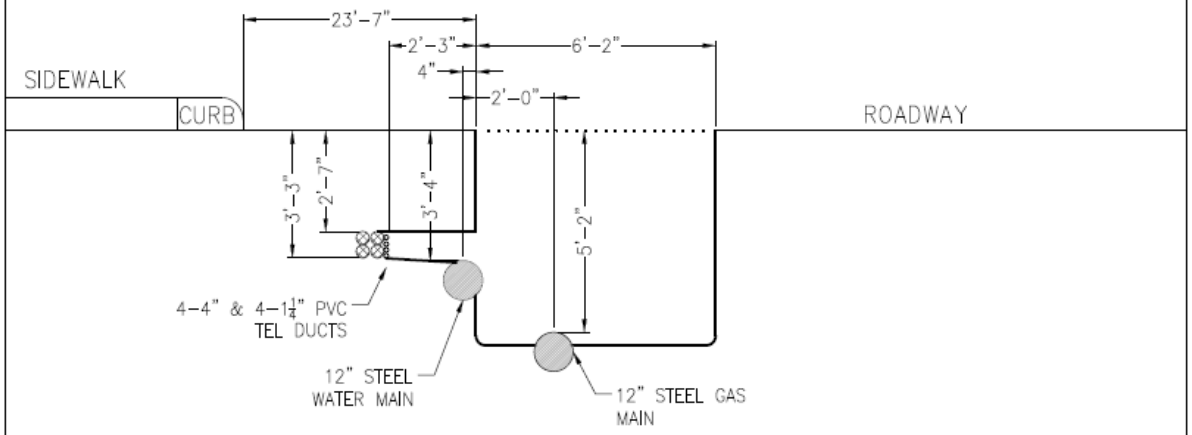

SECTION LOOKING WEST

EMPIRE CITY SUBWAY

SHEET NO. 1 OF 1

JOB: EAST COAST RESILIENCY PREPARED BY: HENRY READ DATE: 10/5/19

JOB NO: SANDRESPC CHECKED BY: ANDREW MATARAZZO DATE: 10/8/19

TEST PIT # 5 LOCATION: SOUTH SIDE OF WATER STREET BTWN

PURPOSE: LOCATE UTILITIES GOUVERNEUR SLIP EAST & JACKSON AVE, MAN

TRENCH DIMENSIONS
6'-2" X 4'-0" X 3'-4"
TP ITEM 6

ASPHALT – 3"
CONCRETE – 8"

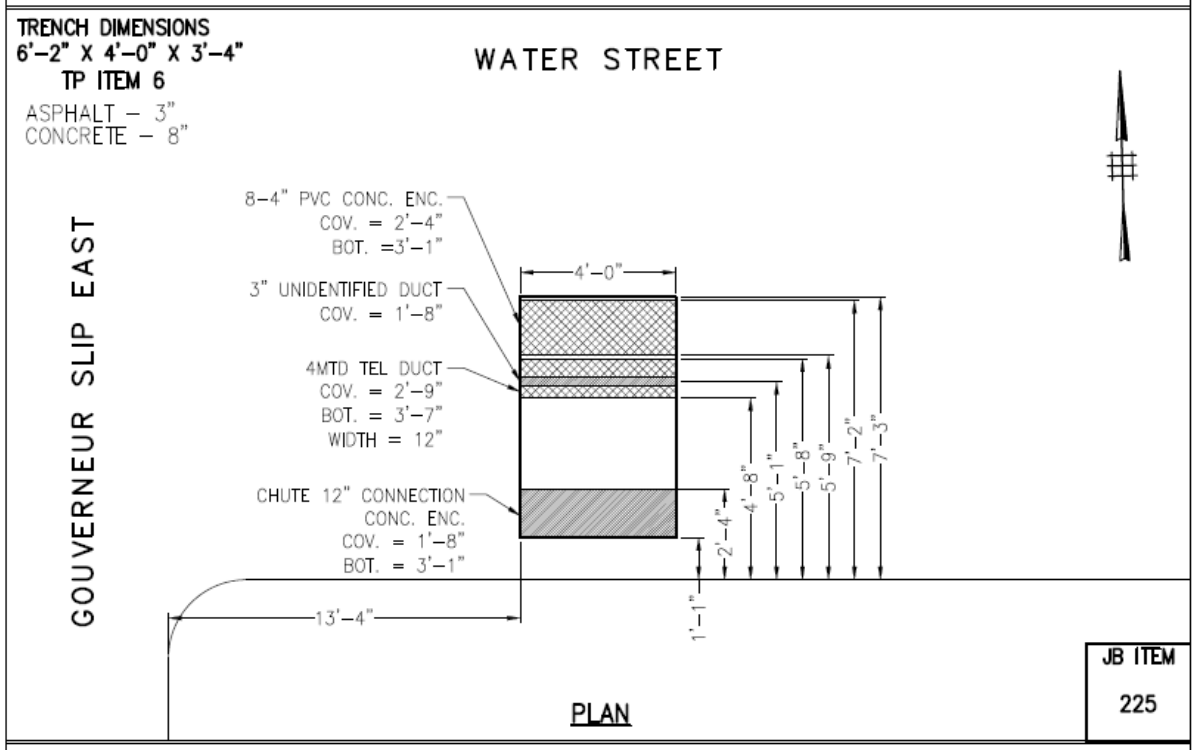

JB ITEM
225

PLAN

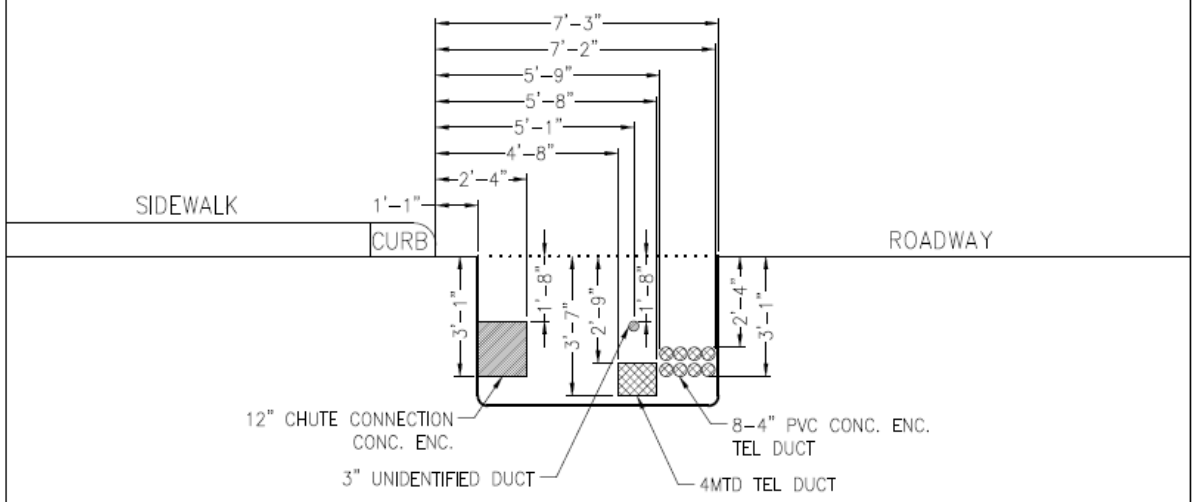

SECTION LOOKING WEST

END OF JB-PAGES

THE JB-PAGES CONSIST OF ONE HUNDRED AND EIGHTY-NINE

(189) PAGES AND SIXTY-ONE (61) SHEETS OF PRIVATE UTILITY DRAWINGS ARE ATTACHED TO THE CONTRACT PLANS

HUD - PAGES:

U.S. DEPARTMENT OF HOUSING AND URBAN DEVELOPMENT PROJECTS

(NO TEXT ON THIS PAGE)

U.S. DEPARTMENT OF HOUSING AND URBAN DEVELOPMENT ("HUD") FUNDING ATTACHMENT

THE CITY OF NEW YORK
DEPARTMENT OF DESIGN AND CONSTRUCTION
INFRASTRUCTURE DIVISION
BUREAU OF DESIGN

THIS ATTACHMENT IS HEREBY MADE A PART OF THE CONTRACT DOCUMENTS

1. The riders and exhibits listed below, and included in this Attachment, are made a part of this contract documents, and the Contractor shall be responsible for compliance with all the provisions contained therein:
    - UNIFORM FEDERAL CONTRACT PROVISIONS RIDER FOR FEDERALLY FUNDED PROCUREMENT CONTRACTS (11/10/2015)
    - CDBG-DR RIDER (1/20/21)
    - HUD EXHIBIT 3 (11/18/2016)
    - FEDERAL LABOR STANDARDS PROVISIONS (Form HUD-4010) (6/2009)
    - DAVIS-BACON WAGE RATES

(NO TEXT ON THIS PAGE)

CDBG-DR Rider

(Version 02.16.2018)

INSTRUCTIONS TO NYC AGENCIES AND OFFICES

This CDBG Rider contains supplementary general conditions for use with procurement contracts and subrecipient agreements that are funded in whole or in part by the U.S. Department of Housing and Urban Development ("HUD") under Title I of the Housing and Community Development Act of 1974 (Pub. L. 93-383) as amended. For all procurement contracts and subrecipient agreements funded by the Community Development Block Grant Disaster Recovery ("CDBG-DR") Program, ***except those funded by the regular CDBG ("CDBG") Program***, this CDBG-DR Rider must be included as an attachment, expressly made a part of, and incorporated by reference. A different rider with terms specific to the regular CDBG Program should be attached to CDBG funded procurement contracts and subrecipient agreements.

If this rider is attached to a subrecipient agreement, the agency or office must ensure that the subrecipient agreement includes the information specific to the subaward required in 2 CFR § 200.331.

FEDERAL REGISTER NOTICES

DEPARTMENT OF HOUSING AND URBAN DEVELOPMENT

Federal Register Notices applicable to the use of CDBG-DR Funds for Hurricane Sandy disaster recovery are available on the HUD Web site at https://www.hudexchange.info/cdbg-dr/cdbg-dr-laws-regulations-and-federal-register-notices.

Contents

ARTICLE 1. DEFINITIONS 3

ARTICLE 2. HOUSING AND COMMUNITY DEVELOPMENT ACT AND NATIONAL ENVIRONMENTAL POLICY ACT 4

ARTICLE 3. LABOR REQUIREMENTS 4

ARTICLE 4. ADDITIONAL FEDERAL CONDITIONS FOR CONSTRUCTION FOR SUBRECIPIENTS 6

ARTICLE 5. FEDERAL NON-DISCRIMINATION LAWS 13

ARTICLE 6. ENVIRONMENTAL PROTECTION; ENERGY EFFICIENCY; HISTORIC PRESERVATION; FLOOD PROTECTION; LEAD-BASED PAINT 14

ARTICLE 7. UNIFORM RELOCATION ASSISTANCE 15

ARTICLE 8. UNIFORM ADMINISTRATIVE REQUIREMENTS (INCLUDING PROCUREMENT STANDARDS), COST PRINCIPLES, AND AUDIT REQUIREMENTS FOR FEDERAL AWARDS 15

ARTICLE 9. UNEARNED PAYMENTS; INCOME; DOCUMENTATION OF COSTS; ACCOUNTING SYSTEM; FIDELITY BONDS; DISBURSEMENT RESTRICTIONS 15

ARTICLE 10. RECORDS AND AUDITS 17

ARTICLE 11. SUBCONTRACTORS 17

ARTICLE 12. CONFLICTS; EXHIBITS 18

ARTICLE 13. REVERSION OF ASSETS 18

ARTICLE 14. SMALL FIRMS, M/WBE FIRMS, AND LABOR SURPLUS AREA FIRMS 18

ARTICLE 15. INTANGIBLE PROPERTY 19

ARTICLE 16. HATCH ACT; LOBBYING; CONFLICTS OF INTEREST 20

ARTICLE 17. SUSPENSION AND TERMINATION 21

ARTICLE 18. PERFORMANCE REQUIREMENTS AND REMEDIES 21

ARTICLE 1. DEFINITIONS

As used in this CDBG-DR Rider:

(a) “Act” means Title 1 of the Housing and Community Development Act of 1974 (Pub. L. 93-383) as amended.

(b) “Agency” means the entity, or entities, executing this Agreement on behalf of the City of New York.

(c) “Agreement” means either the “contract” (as defined by 2 CFR § 200.22) between the City and the Contractor or the agreement between the City and “Subrecipient” as defined by 2 CFR § 200.93 as the context requires.

(d) “City” means the City of New York.

(e) “Construction” means the building, rehabilitation, alteration, conversion, extension, demolition, painting or repair of any improvement to real property.

(f) “Contractor” and/or “Subrecipient” means the entity or entities executing this Agreement, other than the Agency.

(g) “Equipment” means tangible personal property (including information technology systems) having a useful life of more than one year and a per-unit acquisition cost which equals or exceeds $5,000.

(h) “Grant” means Community Development Block Grant Program funds provided to the City of New York by the Federal Department of Housing and Urban Development or a pass-through entity.

(i) “Hometown Plan” means a voluntary areawide plan that was developed by representatives of affected groups (usually labor unions, minority organizations, and contractors), and subsequently approved by the Office of Federal Contract Compliance (OFCC), for purposes of implementing the equal employment opportunity requirements pursuant to Executive Order 11246, as amended.

(j) “HUD” means the Secretary of Housing and Urban Development or a person authorized to act on his or her behalf.

(k) “Program” means the New York City Community Development Block Grant Program approved by HUD as the same may from time to time be amended.

(l) "Real property" means land, including land improvements, structures and appurtenances thereto, but excludes moveable machinery and moveable equipment.

(m) “Subcontractor” means any person, firm or corporation, other than employees of the Contractor or the Subrecipient, or another Subcontractor who is engaged by the Contractor or the Subrecipient to furnish (i) services, (ii) labor or (iii) services and/or labor and materials at the site of the work performed under this Agreement.

ARTICLE 2. HOUSING AND COMMUNITY DEVELOPMENT ACT AND NATIONAL ENVIRONMENTAL POLICY ACT

[Applicable to Contractors and Subrecipients]

This Agreement is subject to Title 1 of the Housing and Community Development Act of 1974 (P.L. 93-383) as amended (The Act) and all rules, regulations and requirements now issued or hereafter issued pursuant to the Act; the Agreement may be suspended and/or terminated without liability to the City if the Grant to the City pursuant to the Act is suspended or terminated, and unless and until the City or Agency receives Community Development funds in an amount that is deemed sufficient to enable it to fund this Agreement, the City or Agency is under no obligation to make any payments to the Contractor or Subrecipient. In this regard, the Agency is under no obligation to make any payments to the Contractor or Subrecipient, and shall not make any such payment, and the Contractor or Subrecipient shall not commence performance, until:

(a) the Agency has received from the City's Office of Management and Budget instructions to proceed, evidencing compliance with the National Environmental Policy Act, as amended, and with regulations of the U.S. Department of Housing and Urban Development, related thereto, found at 24 CFR Part 58, and

(b) the Contractor or Subrecipient has been notified of such instructions by the Agency. Furthermore, the Contractor or Subrecipient and the City mutually agree that the Contractor or Subrecipient shall not advance any funds, from any source without limitation, to pay for costs intended to be paid for under this Agreement prior to the receipt and notification described in this paragraph (a), and the City shall not reimburse the Contractor or Subrecipient for any costs incurred in violation of this provision.

ARTICLE 3. LABOR REQUIREMENTS

[Applicable to Contractors and Subrecipients; must be included in all subcontracts]

(a) ***Section 3.*** This Agreement is subject to Section 3 of the Housing and Urban Development Act of 1968 (P.L. 90-448) and implementing regulations at 24 CFR Part 135, as may be amended during the term of this Agreement. Pursuant to 24 CFR § 135.38, the Contractor or Subrecipient agrees to the following:

1. The work to be performed under this Agreement is subject to the requirements of Section 3 of the Housing and Urban Development Act of 1968, as amended, 12 U.S.C. § 1701 u (Section 3). The purpose of Section 3 is to ensure that employment and other economic opportunities generated by HUD assistance or HUD-assisted projects covered by Section 3 shall, to the greatest extent feasible, be directed to low- and very low-income persons, particularly persons who are recipients of HUD assistance for housing.

2. The parties to this Agreement agree to comply with HUD's regulations in 24 CFR Part 135, which implement Section 3. As evidenced by their execution of this Agreement, the parties to this Agreement certify that they are under no contractual or other impediments that would prevent them from complying with the Part 135 regulations.

3. The Contractor or Subrecipient agrees to send to each labor organization or representative of workers with which the Contractor or Subrecipient has a collective bargaining agreement or other understanding, if any, a notice advising the labor organization or workers' representative of the Contractor's or Subrecipient's commitments under this Section 3 clause, and will post copies of the notice in conspicuous places at the work site where both employees and applicants for training and employment positions can see the notice. The notice shall describe the Section 3 preference, shall set forth minimum number and job titles subject to hire, availability of apprenticeship and training positions, the qualifications for each; and the name and location of the person(s) taking applications for each of the positions; and the anticipated date the work shall begin.

4. The Contractor or Subrecipient agrees to include this Section 3 clause in every subcontract subject to compliance with regulations in 24 CFR Part 135, and agrees to take appropriate action, as provided in an applicable provision of the subcontract or in this Section 3 clause, upon a finding that the Subcontractor is in violation of the regulations in 24 CFR Part 135. The Contractor or Subrecipient will not subcontract with any Subcontractor where the Contractor or Subrecipient has notice or knowledge that the Subcontractor has been found in violation of the regulations in 24 CFR Part 135.

5. The Contractor or Subrecipient will certify that any vacant employment positions, including training positions, that are filled (1) after the Contractor or Subrecipient is selected but before the Agreement is executed, and (2) with persons other than those to whom the regulations of 24 CFR Part 135 require employment opportunities to be directed, were not filled to circumvent the Contractor's or Subrecipient's obligations under 24 CFR Part 135.

6. Noncompliance with HUD's regulations in 24 CFR Part 135 may result in sanctions, termination of this Agreement for default, and debarment or suspension from future HUD assisted contracts.

7. With respect to work performed in connection with Section 3 covered Indian Housing Assistance, Section 7(b) of the Indian Self-Determination and Education Assistance Act (25 U.S.C. 450e) also applies to the work to be performed under this Agreement. Section 7(b) requires that to the greatest extent feasible (i) preference and opportunities for training and employment shall be given to Indians, and (ii) preference in the award of contracts and subcontracts shall be given to Indian organizations and Indian-owned Economic Enterprises. Parties to this Agreement that are subject to the provisions of Section 3 and Section 7(b) agree to comply with Section 3 to the maximum extent feasible, but not in derogation of compliance with Section 7(b).

8. The Contractor or Subrecipient agrees to submit, and shall cause its subcontractors to submit, quarterly reports to the Agency detailing the number of new employees hired, the number of new Section 3 employees hired, and any affirmative efforts made to direct hiring efforts to low- and very low-income persons, particularly persons who are recipients of HUD assistance for housing during the previous quarter.

(b) ***The Davis-Bacon Act (40 U.S.C. §§ 3141* et seq.*).*** In Construction contracts involving an excess of $2000, unless exclusively in connection with the rehabilitation of residential property containing fewer than 8 units, the Contractor shall pay and the Subrecipient shall cause its contractors to pay all laborers and mechanics at a rate not less than those determined by the Secretary of Labor to be prevailing for the City, which rates are to be provided by the Agency. These wage rates are a federally mandated minimum only, and will be superseded by any State or City requirement mandating higher wage rates. The Contractor also agrees to comply with Department of Labor Regulations pursuant to the Davis-Bacon Act found in 29 CFR Parts 1, 3, 5 and 7, which enforce statutory labor standards provisions. **This provision supersedes section D(1)(a) of the Uniform Federal Contract Provisions Rider for Federally Funded Procurement Contracts.**

(c) ***Overtime.*** In Construction contracts involving an excess of $2000, and subject to the exception in 24 CFR section 570.603 (regarding the rehabilitation of residential property containing less than 8 units), Contractor shall comply and the Subrecipient shall cause its contractor to comply with sections 103 and 107 of the Contract Work Hours and Safe Standards Act (40 U.S.C. §§ 3701 *et seq.*), which provides that no laborer or mechanic shall be required or permitted to work more than eight hours in a calendar day or in excess of forty hours in any workweek, unless such laborer or mechanic is paid at an overtime rate of 1½ times his/her basic rate of pay for all hours worked in excess of these limits. In the event of a violation of this provision, the Contractor shall not only be liable to any affected employee for his/her unpaid wages, but shall be additionally liable to the United States for liquidated damages. **This provision supersedes section D(1)(b) of the Uniform Federal Contract Provisions Rider for Federally Funded Procurement Contracts.**

ARTICLE 4. ADDITIONAL FEDERAL CONDITIONS FOR CONSTRUCTION FOR SUBRECIPIENTS

[Applicable to Subrecipients. A similar provision for Contractors is included in the Uniform Federal Contract Provisions Rider for Federally Funded Procurement Contracts at section D(1)(c)-(d), (2) and (3).]

If this Agreement involves Construction work, design for Construction, or Construction services, all such work or services performed by the Subrecipient and its Subcontractors shall be subject to the following requirements:

(a) ***Impermissible Salary Deductions.*** In Construction contracts of any amount, the Subrecipient shall cause its Subcontractor to comply with the Copeland "Anti-Kickback" Act (18 U.S.C. § 874), as supplemented by the regulations contained in 29 CFR Part 3, requiring that all laborers and mechanics shall be paid unconditionally and not less often than once a week, and prohibiting all but "permissible" salary deductions.

(b) ***Federal Labor Standards.*** In Construction contracts of any amount, the Subrecipient shall cause its Subcontractors to comply with the more detailed statement of Federal Labor Standards annexed hereto as FEDERAL EXHIBIT 2.

(c) ***Equal Employment Opportunity.*** In Construction contracts or subcontracts in excess of $10,000, the Subrecipient shall cause its Subcontractors to comply with Executive Order 11246, as amended by Executive Order 11375, and as supplemented in Department of Labor regulations (41 CFR chapter 60). Subrecipient shall include the following Specifications, which are required pursuant to 41 CFR § 60-4.3 in all federally assisted contracts and subcontracts. For the purposes of the Equal Opportunity Construction Contract Specifications and Clause below, the term "Construction Work" means the construction, rehabilitation, alteration, conversion, extension, demolition or repair of buildings, highways, or other changes or improvements to real property, including facilities providing utility services. The term also includes the supervision, inspection, and other onsite functions incidental to the actual construction.

Standard Federal Equal Employment Opportunity Construction Contract Specifications for Contracts and Subcontracts in Excess of $10,000. (Federal Notice Required by 41 CFR § 60-4.3)

1. As used in these specifications:

a. "Covered area" means the geographical area described in the solicitation from which this contract resulted;

b. "Director" means Director, Office of Federal Contract Compliance Programs, United States Department of Labor, or any person to whom the Director delegates authority;

c. "Employer identification number" means the Federal Social Security number used on the Employer's Quarterly Federal Tax Return, U.S. Treasury Department Form 941.

d. "Minority" includes:

(i) Black (all persons having origins in any of the Black African racial groups not of Hispanic origin);

(ii) Hispanic (all persons of Mexican, Puerto Rican, Cuban, Central or South American or other Spanish Culture or origin, regardless of race);

(iii) Asian and Pacific Islander (all persons having origins in any of the original peoples of the Far East, Southeast Asia, the Indian Subcontinent, or the Pacific Islands); and

(iv) American Indian or Alaskan Native (all persons having origins in any of the original peoples of North America and maintaining identifiable tribal affiliations through membership and participation or community identification).

2. Whenever the contractor or any subcontractor at any tier, subcontracts a portion of the work involving any Construction trade, it shall physically include in each subcontract in excess of $10,000 the provisions of these specifications and the Notice which contains the applicable goals for minority and female participation and which is set forth in the solicitations from which this Agreement resulted.

3. If the contractor is participating (pursuant to 41 CFR § 60-4.5) in a Hometown Plan approved by the U.S. Department of Labor in the covered area either individually or through an association, its affirmative action obligations on all work in the Plan area (including goals and timetables) shall be in accordance with that Plan for those trades

which have unions participating in the Plan. Contractors must be able to demonstrate their participation in and compliance with the provisions of any such Hometown Plan. Each contractor or subcontractor participating in an approved Plan is individually required to comply with its obligations under the EEO clause, and to make a good faith effort to achieve each goal under the Plan in each trade in which it has employees. The overall good faith performance by other contractors or subcontractors toward a goal in an approved Plan does not excuse any covered contractor's or subcontractor's failure to take good faith efforts to achieve the Plan goals and timetables.

4. The contractor shall implement the specific affirmative action standards provided in paragraphs 7 a through p of these specifications. The goals set forth in the solicitation from which this Agreement resulted are expressed as percentages of the total hours of employment and training of minority and female utilization the contractor should reasonably be able to achieve in each Construction trade in which it has employees in the covered area. Covered Construction contractors performing Construction Work in geographical areas where they do not have a Federal or federally assisted Construction contract shall apply the minority and female goals established for the geographical areas where the work is being performed. Goals are published periodically in the Federal Register in notice form, and such notices may be obtained from any Office of Federal Contract Compliance Programs office or from Federal procurement contracting officers. The contractor is expected to make substantially uniform progress in meeting its goals in each craft during the period specified.

5. Neither the provisions of any collective bargaining agreement, nor the failure by a union with whom the contractor has a collective bargaining agreement, to refer either minorities or women shall excuse the contractor's obligations under these specifications, Executive Order 11246, or the regulations promulgated pursuant thereto.

6. In order for the nonworking training hours of apprentices and trainees to be counted in meeting the goals, such apprentices and trainees must be employed by the contractor during the training period, and the contractor must have made a commitment to employ the apprentices and trainees at the completion of their training, subject to the availability of employment opportunities. Trainees must be trained pursuant to training programs approved by the U.S. Department of Labor.

7. The contractor shall take specific affirmative actions to ensure equal employment opportunity. The evaluation of the contractor's compliance with these specifications shall be based upon its effort to achieve maximum results from its actions. The contractor shall document these efforts fully, and shall implement affirmative action steps at least as extensive as the following:

a. Ensure and maintain a working environment free of harassment, intimidation, and coercion at all sites, and in all facilities at which the contractor's employees are assigned to work. The contractor, where possible, will assign two or more women to each Construction project. The contractor shall specifically ensure that all foremen, superintendents, and other on-site supervisory personnel are aware of and carry out the contractor's obligation to maintain such a working environment, with specific attention to minority or female individuals working at such sites or in such facilities.

b. Establish and maintain a current list of minority and female recruitment sources, provide written notification to minority and female recruitment sources and to

community organizations when the contractor or its unions have employment opportunities available, and maintain a record of the organization's responses.

c. Maintain a current file of the names, addresses and telephone numbers of each minority and female off-the-street applicant and minority or female referral from a union, a recruitment source or community organization and of what action was taken with respect to each such individual. If such individual was sent to the union hiring hall for referral and was not referred back to the contractor by the union or, if referred, not employed by the contractor, this shall be documented in the file with the reason therefor, along with whatever additional actions the contractor may have taken.

d. Provide immediate written notification to the Director when the union or unions with which the contractor has a collective bargaining agreement has not referred to the contractor a minority person or woman sent by the contractor, or when the contractor has other information that the union referral process has impeded the contractor's efforts to meet its obligations.

e. Develop on-the-job training opportunities and/or participate in training programs for the area which expressly include minorities and women, including upgrading programs and apprenticeship and trainee programs relevant to the contractor's employment needs, especially those programs funded or approved by the Department of Labor. The contractor shall provide notice of these programs to the sources compiled under 7b above.

f. Disseminate the contractor's EEO policy by providing notice of the policy to unions and training programs and requesting their cooperation in assisting the contractor in meeting its EEO obligations; by including it in any policy manual and collective bargaining agreement; by publicizing it in the company newspaper, annual report, etc.; by specific review of the policy with all management personnel and with all minority and female employees at least once a year; and by posting the company EEO policy on bulletin boards accessible to all employees at each location where Construction Work is performed.

g. Review, at least annually, the company's EEO policy and affirmative action obligations under these specifications with all employees having any responsibility for hiring, assignment, layoff, termination or other employment decisions including specific review of these items with on-site supervisory personnel such as Superintendents, General Foremen, etc., prior to the initiation of Construction Work at any job site. A written record shall be made and maintained identifying the time and place of these meetings, persons attending, subject matter discussed, and disposition of the subject matter.

h. Disseminate the contractor's EEO policy externally by including it in any advertising in the news media, specifically including minority and female news media, and providing written notification to and discussing the contractor's EEO policy with other contractors and subcontractors with whom the contractor does or anticipates doing business.

i. Direct its recruitment efforts, both oral and written, to minority, female and community organizations, to schools with minority and female students and to minority and female recruitment and training organizations serving the contractor's recruitment area and employment needs. Not later than one month prior to the date for the acceptance of applications for apprenticeship or other training by any recruitment source, the contractor shall send written notification to organizations such as the above, describing the openings, screening procedures, and tests to be used in the selection process.

j. Encourage present minority and female employees to recruit other minority persons and women and, where reasonable, provide after school, summer and vacation

employment to minority and female youth both on the site and in other areas of a contractor's work force.

k. Validate all tests and other selection requirements where there is an obligation to do so under 41 CFR Part 60-3.

l. Conduct, at least annually, an inventory and evaluation at least of all minority and female personnel for promotional opportunities and encourage these employees to seek or to prepare for, through appropriate training, etc., such opportunities.

m. Ensure that seniority practices, job classifications, work assignments and other personnel practices, do not have a discriminatory effect by continually monitoring all personnel and employment related activities to ensure that the EEO policy and the contractor's obligations under these specifications are being carried out.

n. Ensure that all facilities and company activities are non-segregated except that separate or single-user toilet and necessary changing facilities shall be provided to assure privacy between the sexes.

o. Document and maintain a record of all solicitations of offers for subcontracts from minority and female Construction contractors and suppliers, including circulation of solicitations to minority and female contractor associations and other business associations.

p. Conduct a review, at least annually, of all supervisor's adherence to and performance under the Contractor's EEO policies and affirmative action obligations.

8. Contractors are encouraged to participate in voluntary associations which assist in fulfilling one or more of their affirmative action obligations (7a through p). The efforts of a contractor association, joint contractor-union, contractor-community, or other similar group of which the contractor is a member and participant, may be asserted as fulfilling any one or more of its obligations under 7a through p of these specifications provided that the contractor actively participates in the group, makes every effort to assure that the group has a positive impact on the employment of minorities and women in the industry, ensures that the concrete benefits of the Program are reflected in the contractor's minority and female work force participation, makes a good faith effort to meet its individual goals and timetables, and can provide access to documentation which demonstrates the effectiveness of actions taken on behalf of the contractor. The obligation to comply, however, is the contractor's and failure of such a group to fulfill an obligation shall not be a defense for the contractor's noncompliance.

9. A single goal for minorities and a separate single goal for women have been established. The contractor, however, is required to provide equal employment opportunity and to take affirmative action for all minority groups, both male and female, and all women, both minority and non-minority. Consequently, the contractor may be in violation of the Executive Order if a particular group is employed in a substantially disparate manner (for example, even though the contractor has achieved its goals for women generally, the contractor may be in violation of the Executive Order if a specific minority group of women is underutilized).

10. The contractor shall not use the goals and timetables or affirmative action standards to discriminate against any person because of race, color, religion, sex, or national origin.

11. The contractor shall not enter into any Subcontract with any person or firm debarred from Government contracts pursuant to Executive Order 11246 or suspended or is otherwise excluded from or ineligible for participation in federal assistance programs.

12. The contractor shall carry out such sanctions and penalties for violation of these specifications and of the Equal Opportunity Clause, including suspension, termination and cancellation of existing subcontracts as may be imposed or ordered pursuant to Executive Order 11246, as amended, and its implementing regulations, by the Office of Federal Contract Compliance Programs. Any contractor who fails to carry out such sanctions and penalties shall be in violation of these specifications and Executive Order 11246, as amended.

13. The contractor, in fulfilling its obligations under these specifications, shall implement specific affirmative action steps, at least as extensive as those standards prescribed in paragraph 7 of these specifications, so as to achieve maximum results from its efforts to ensure equal employment opportunity. If the contractor fails to comply with the requirements of the Executive Order, the implementing regulations, or these specifications, the Director shall proceed in accordance with 41 § CFR 60-4.8.

14. The contractor shall designate a responsible official to monitor all employment related activity to ensure that the company EEO policy is being carried out, to submit reports relating to the provisions hereof as may be required by the Government and to keep records. Records shall at least include for each employee the name, address, telephone numbers, Construction trade, union affiliation if any, employee identification number when assigned, social security number, race, sex, status (e.g., mechanic, apprentice trainee, helper, or laborer), dates of changes in status, hours worked per week in the indicated trade, rate of pay, and locations at which the work was performed. Records shall be maintained in an easily understandable and retrievable form; however, to the degree that existing records satisfy this requirement, contractors shall not be required to maintain separate records.

15. Nothing herein provided shall be construed as a limitation upon the application of other laws which establish different standards of compliance or upon the application of requirements for hiring of local or other areas residents (e.g., those under the Public Works Employment Act of 1977 and the Community Development Block Grant Program).

(B) **Equal Opportunity Clause.** Subrecipient shall include the following provisions, which are required by 41 CFR § 60-1.4(b), in all federally assisted contracts and subcontracts.

During the performance of this contract, the Contractor agrees as follows:

(1) The Contractor will not discriminate against any employee or applicant for employment because of race, color, religion, sex, sexual orientation, gender identity, or national origin. The Contractor will take affirmative action to ensure that applicants are employed, and that employees are treated during employment without regard to their race, color, religion, sex, sexual orientation, gender identity, or national origin. Such action shall include, but not be limited to the following:

Employment, upgrading, demotion, or transfer; recruitment or recruitment advertising; layoff or termination; rates of pay or other forms of compensation; and selection for training, including apprenticeship. The Contractor agrees to post in conspicuous places, available to employees and applicants for employment,

notices to be provided setting forth the provisions of this nondiscrimination clause.

(2) The Contractor will, in all solicitations or advertisements for employees placed by or on behalf of the Contractor, state that all qualified applicants will receive consideration for employment without regard to race, color, religion, sex, sexual orientation, gender identity, or national origin.

(3) The Contractor will not discharge or in any other manner discriminate against any employee or applicant for employment because such employee or applicant has inquired about, discussed, or disclosed the compensation of the employee or applicant or another employee or applicant. This provision shall not apply to instances in which an employee who has access to the compensation information of other employees or applicants as a part of such employee's essential job functions discloses the compensation of such other employees or applicants to individuals who do not otherwise have access to such information, unless such disclosure is in response to a formal complaint or charge, in furtherance of an investigation, proceeding, hearing, or action, including an investigation conducted by the employer, or is consistent with the Contractor's legal duty to furnish information.

(4) The Contractor will send to each labor union or representative of workers with which he has a collective bargaining agreement or other contract or understanding, a notice to be provided advising the said labor union or workers' representatives of the Contractor's commitments under this section, and shall post copies of the notice in conspicuous places available to employees and applicants for employment.

(5) The Contractor will comply with all provisions of Executive Order 11246 of September 24, 1965, and of the rules, regulations, and relevant orders of the Secretary of Labor.

(6) The Contractor will furnish all information and reports required by Executive Order 11246 of September 24, 1965, and by rules, regulations, and orders of the Secretary of Labor, or pursuant thereto, and will permit access to his books, records, and accounts by HUD and the Secretary of Labor for purposes of investigation to ascertain compliance with such rules, regulations, and orders.

(7) In the event of the Contractor's noncompliance with the nondiscrimination clauses of this contract or with any of the said rules, regulations, or orders, this contract may be canceled, terminated, or suspended in whole or in part and the Contractor may be declared ineligible for further Government contracts or federally assisted construction contracts in accordance with procedures authorized in Executive Order 11246 of September 24, 1965, and such other sanctions may be imposed and remedies invoked as provided in Executive Order 11246 of September 24, 1965, or by rule, regulation, or order of the Secretary of Labor, or as otherwise provided by law.

(8) The Contractor will include the portion of the sentence immediately preceding paragraph (1) and the provisions of paragraphs (1) through (8) in every subcontract or purchase order unless exempted by rules, regulations, or orders of the Secretary of Labor issued pursuant to section 204 of Executive Order 11246 of September 24, 1965, so that such provisions will be binding upon each subcontractor or vendor. The Contractor will take such action with respect to any

subcontract or purchase order as HUD may direct as a means of enforcing such provisions, including sanctions for noncompliance:

Provided, however, that in the event a Contractor becomes involved in, or is threatened with, litigation with a subcontractor or vendor as a result of such direction by HUD, the Contractor may request the United States to enter into such litigation to protect the interests of the United States.

ARTICLE 5. FEDERAL NON-DISCRIMINATION LAWS

[Applicable to Contractors and Subrecipients]

This Agreement is subject to:

(a) Section 109 of the Act, which requires that no person in the United States shall on the grounds of race, color, national origin, religion, or sex be excluded from participation in, be denied the benefits of, or be subjected to discrimination under any program or activity receiving Federal financial assistance made available pursuant to the Act. Section 109 also directs that the prohibitions against discrimination on the basis of age under the Age Discrimination Act and the prohibitions against discrimination on the basis of disability under Section 504 shall apply to programs or activities receiving Federal financial assistance under Title I programs. The Contractor or Subrecipient agrees to comply with provisions of 24 CFR Parts 6, 8, and 146.

(b) Title VIII of the Civil Rights Act of 1968 (P.L. 90-284; 42 U.S.C. §§ 3602-3620), as amended, which prohibits discrimination in the sale or rental of housing and in the provision of brokerage services based on race, color, religion, sex, national origin, disability, or familial status, and which requires affirmative action in the furtherance of Fair Housing objectives.

(c) Executive Order 11063, as amended by Executive Order 12259, pursuant to regulations issued at 24 CFR Part 107, which prohibits discrimination on the basis of race, color, religion, sex or national origin and requires equal opportunity in housing constructed, operated or provided with federal funds.

(d) Title VI of the Civil Rights Act of 1964 (P.L. 88-352; 42 U.S.C. §§ 2000d *et seq.*) and implementing regulations in 24 CFR Part 1, which states that no person shall, on the ground of race, color or national origin, be excluded from participation in, be denied the benefits of, or otherwise be subject to discrimination under any Program or activity made possible by, or resulting from, this Agreement.

(e) 24 CFR § 5.109, "Equal participation of faith-based organizations in HUD programs and activities."

(f) Consistent with 24 CFR § 570.614, the Contractor or Subrecipient warrants that all services, programs, and/or Construction (including design and alteration) under this Agreement shall be performed in accordance with all federal, state and local laws and regulations regarding accessibility standards for persons with disabilities including, but not limited to, the following: Section 504 of the Rehabilitation Act, the Architectural Barriers Act of 1968 (42 U.S.C. § 4151-4157), the Uniform Federal Accessibility

Standards (Appendix A to 24 CFR Part 40 and Appendix A to 41 CFR Part 101-19, subpart 101-19.6), and the Americans with Disabilities Act (42 U.S.C. § 12131; 47 U.S.C. §§ 155, 201, 218, and 225).

The non-discrimination provisions in this Article shall be incorporated in and made a part of all subcontracts executed in connection with this Agreement.

(g) Subrecipients shall comply with all civil-rights related requirements, pursuant to 24 CFR § 570.503(b)(5).

ARTICLE 6. ENVIRONMENTAL PROTECTION; ENERGY EFFICIENCY; HISTORIC PRESERVATION; FLOOD PROTECTION; LEAD-BASED PAINT

[Paragraphs (a) – (e) applicable to Contractors and Subrecipients; paragraph (f) applicable to Subrecipients]

(a) For agreements, subcontracts, and subgrants of amounts in excess of $150,000, the Contractor or Subrecipient shall comply with all applicable standards, orders, or requirements issued under the Clean Air Act (42 U.S.C. § 7401, Federal Water Pollution control Act (33 U.S.C. §§ 1251, et seq.) Section 508 of the Clean Water Act (33 U.S.C. § 1368), Executive Order 11738, and Environmental Protection Agency regulations (provisions of 40 CFR Part 50 and 2 CFR Part 1532 related to the Clean Air Act and Clean Water Act). Violations must be reported to the Federal Agency and the Regional Office of the Environmental Protection Agency (EPA).

(b) The Subrecipient and Contractor shall comply with mandatory standards and policies relating to energy efficiency that are contained in the New York State energy conservation plan issued in compliance with the Energy Policy Conservation Act (Pub. L 94-163). Further, the Contractor or Subrecipient shall comply with the construction standards concerning energy efficiency set forth in section VI(A)(1)(a)(5) of HUD Docket No. FR-5696-N-01.

(c) This Agreement is subject to laws and authorities listed in 24 CFR § 58.5, including the Historic Preservation Act of 1966 (Section 1 of Pub. L. No. 89-665, as amended by Pub. L. No. 96-515; 54 U.S.C. §§ 100101 and 300101 *et seq.*), the Archeological and Historic Preservation Act of 1974 (P.L. 93-291; 16 U.S.C. §§ 469-469c), Executive Order 11593 and regulations at 36 CFR Part 800. In general, this requires concurrence from the State Historic Preservation Officer for all rehabilitation and demolition of historic properties that are fifty years old or older or that are included on a Federal, state, or local historic property list.

(d) This Agreement is subject to the Lead-Based Paint Poison Prevention provisions found in 24 CFR § 570.608, the Lead-Based Paint Poisoning Prevention Act (42 U.S.C. §§ 4821-4846), the Residential Lead Based Paint Hazard Reduction Act of 1992 (U.S.C. §§ 4851-4856, and 24 CFR Part 35, subparts A, B, J, K, and R. This provision is to be included in all subcontracts, for work in connection with this Agreement, which relate to residential structures.

(e) Pursuant to the provisions in 24 CFR § 570.605, Section 202(a) of the Flood Disaster Protection Act of 1973 (42 U.S.C. § 4106), and the regulations in 44 CFR Parts 59-79 apply to this Agreement.

(f) Subrecipients shall implement procedures and mechanisms to ensure that assisted property owners comply with all flood insurance requirements set forth in Section VI(B)(31) of HUD Docket No. FR-56960-N-01.

ARTICLE 7. UNIFORM RELOCATION ASSISTANCE

[Applicable to Contractors and Subrecipients]

This Agreement is subject to the Uniform Relocation Assistance and Real Property Acquisition Policies Act of 1970 (42 U.S.C. §§ 4601-4655) and regulations at 49 CFR Part 24 and 24 CFR section 570.606.

ARTICLE 8. UNIFORM ADMINISTRATIVE REQUIREMENTS (INCLUDING PROCUREMENT STANDARDS), COST PRINCIPLES, AND AUDIT REQUIREMENTS FOR FEDERAL AWARDS

[Subdivision (a) is applicable to Contractors and Subrecipients; subdivision (b) is applicable to Subrecipients only; subdivision (c) is applicable to Contractors only]

(a) Pursuant to 2 CFR § 2400.101 and 24 CFR § 85.1, Subrecipients and Contractors are subject to the Uniform Administrative Requirements, Cost Principles, and Audit Requirements for Federal Awards at 2 CFR Part 200 (commonly referred to the "Super Circular"), as applicable.

(b) For the procurement of all subcontracts and goods contracts, Subrecipients are required to follow the procurement standards in 2 CFR §§ 200.318-200.326, except as allowed by 2 CFR § 200.110.

(c) Contractors are subject to the Uniform Federal Contract Provisions Rider, attached to this Agreement.

ARTICLE 9. UNEARNED PAYMENTS; INCOME; DOCUMENTATION OF COSTS; ACCOUNTING SYSTEM; FIDELITY BONDS; DISBURSEMENT RESTRICTIONS

[Paragraphs (a), (b), (d), and (e) are applicable to Contractors and Subrecipients; paragraph (c) is applicable to Subrecipients only]

(a) Unearned payments under this Agreement may be suspended or terminated upon refusal to accept any additional conditions that may be imposed by HUD at any time, or if the

Grant to the City under the Act is suspended or terminated. Unearned payments received by the Contractor or Subrecipient will be returned to the City.

The Contractor or Subrecipient agrees that if any income is generated from the Community Development Block Grant Program funded activities, Contractor or Subrecipient shall return such income to the City's Community Development Block Grant Program unless expressly authorized by the City. Such funds are subject to all applicable requirements governing the use of Community Development Block Grant funds, including 24 CFR § 570.503(b)(3), which provides that, at the end of the program year, the City may require remittance of all or part of any program income balances (including investments thereof) held by the Subrecipient (except those needed for immediate cash needs, cash balances of a revolving loan fund, cash balances from a lump sum drawdown, or cash or investments held for section 108 security needs). Alternative program requirements concerning the definition of "program income" are set forth in Section VI(A)(17)(a)-(b) of Docket No. FR-56960-N-01, as amended by Section II(5) of Docket No. FR-5710-N-01.

(b) All costs shall be supported by properly executed payrolls, time records, invoices, contracts, or vouchers, or other official documentation evidencing in proper detail the nature and propriety of the charges. All checks, payrolls, invoices, contracts, vouchers, orders or other accounting documents, pertaining in whole or in part to the Agreement, shall be clearly identified and readily accessible.

(c) The Subrecipient shall submit to the Agency a detailed description of its accounting, reporting and internal control systems, including but not limited to the procedures for cash receipts, cash disbursements, payrolls, personnel policies, fixed petty cash controls and other systems which are necessary under the circumstances. The Agency shall evaluate and document all systems and only upon acceptance and approval of the accounting, reporting and internal control systems by the Agency, shall funds be disbursed to the Subrecipient, other provisions of the Agreement notwithstanding.

(d) If required by the Federal awarding agency or elsewhere in this Agreement, the Agency must receive a statement from the Contractor's or Subrecipient's chief fiscal officer or its insurer assuring that all persons handling funds received or disbursed under this Agreement are covered by fidelity insurance in an amount equal to cash advances from the City. If the bond is cancelled or coverage is substantially reduced, the Contractor or Subrecipient shall promptly notify the Agency of this fact in every case not later than 48 hours. In such event, the Agency shall not disburse any more funds to the Contractor or Subrecipient until it has received assurance that adequate coverage has subsequently been obtained.

(e) No money under this Agreement shall be disbursed by the Agency to any Contractor or Subrecipient except pursuant to a written contract which incorporates the applicable Supplementary General Conditions and unless the Contractor or Subrecipient is in compliance with HUD requirements with regard to accounting and fiscal matters, to the extent they are applicable, and provided that the Agency has completed HUD requirements, including but not limited to environmental certifications pursuant to 24 CFR Part 58.

ARTICLE 10. RECORDS AND AUDITS

[Applicable to Contractors and Subrecipients]

(a) (i) The Subrecipient shall maintain records in accordance with requirements prescribed by or in 2 CFR § 200.333, HUD and/or the City with respect to all matters covered by this Agreement and retained for at least three years after the City makes final payments and all other pending matters concerning this Agreement are closed, subject to the exceptions in 2 CFR § 200.333. (ii) The Contractor shall maintain records in accordance with the requirements elsewhere in this Agreement.

(b) At such times on such forms as HUD and/or the City may require, there shall be furnished to HUD and/or the City such statements, records, reports, data and information, as HUD and/or the City may request pertaining to matters covered by this Agreement. At a minimum, such forms will include the following:

(i) Quarterly Data Collection Report forms for the purpose of including specific Program description, accomplishment, expenditure and beneficiary information in the City's Quarterly Performance Reports.

(ii) Annual Property Register forms for the purpose of tracking the use of CDBG purchased equipment.

(c) At any time during normal business hours and as often as the City, the Agency, HUD, Inspector General, U.S. General Accounting Office, and/or the Comptroller General of the United States may deem necessary, the Contractor or Subrecipient shall make available for examination to the City, HUD, Inspector General, U.S. General Accounting Office and/or representatives of the Comptroller General all of its books, accounts, records, reports, files, and other papers or property with respect to all matters covered by this Agreement and shall permit the City, HUD and/or representatives of the Comptroller General and the U.S. General Accounting Office to audit, examine, make excerpts of, and make transcriptions from such books, accounts, records, reports, files, and other papers or property and to make audits of all contracts, invoices, materials, payrolls, records or personnel, conditions of employment and other data relating to all matters covered by this Agreement.

ARTICLE 11. SUBCONTRACTORS

[Applicable to Contractors and Subrecipients]

(a) The provisions of this Agreement shall apply to Subcontractors and their officers, agents and employees in all respects as if they were employees of the Contractor or Subrecipient. The Contractor or Subrecipient shall not be discharged from its obligations and liabilities, but shall be liable for all acts and negligence of Subcontractors, and their officers, agents and employees, as if they were employees of the Contractor or Subrecipient.

(b) Employees of the Subcontractor shall be subject to the same provisions as employees of the Contractor or Subrecipient.

(c) The services furnished by Subcontractors shall be subject to the provisions hereof as if furnished directly by the Contractor or Subrecipient, and the Contractor or Subrecipient shall remain responsible therefor.

ARTICLE 12. CONFLICTS; EXHIBITS

[Applicable to Contractors and Subrecipients]

(a) If any provision in this CDBG Rider directly conflicts with any other provision in the Agreement, the provision in CDBG Rider shall be controlling.

(b) Federal Exhibits 1 and 2 are attached to, and made a part of this CDBG Rider.

ARTICLE 13. REVERSION OF ASSETS

[Applicable to Subrecipients]

(a) At the Agreement's expiration, the Subrecipient shall transfer to the City all CDBG funds on hand at the time of expiration and any accounts receivable attributable to the use of CDBG funds.

(b) Any real property under the Subrecipient's control that was acquired or improved in whole or in part with Community Development funds in excess of $25,000 must be used to either (i) meet the national objectives in Section 570.208 for a period of five years after acquisition if the property or completion of the improvements, as applicable, or (ii) disposed in a manner which results in the Program being reimbursed in the amount of the current fair market value of the property less any portion thereof attributable to expenditures of non-CDBG funds for acquisition of, or improvements to, the property.

(c) Title to all Equipment in excess of $5,000 purchased pursuant to this Agreement with CDBG funds or furnished by the City shall vest in the City and the same shall be conspicuously labeled as such.

ARTICLE 14. SMALL FIRMS, M/WBE FIRMS, AND LABOR SURPLUS AREA FIRMS

[Applicable to Subrecipients. Contractors must follow section C(11) of the Uniform Federal Contract Provisions Rider for Federally Funded Procurement Contracts.]

Subrecipient shall take the following affirmative steps in the letting of subcontracts, if subcontracts are to be let, in order to ensure that minority firms, women's business enterprises, and labor surplus area firms are used when possible:

(a) Placing qualified small and minority businesses and women's business enterprises on solicitation lists;

(b) Assuring that small and minority businesses, and women's business enterprises are solicited whenever they are potential sources;

(c) Dividing total requirements, when economically feasible, into smaller tasks or quantities to permit maximum participation by small and minority businesses, and women's business enterprises;

(d) Establishing delivery schedules, where the requirement permits, which encourage participation by small and minority businesses, and women's business enterprises; and

(e) Using the services and assistance of the Small Business Administration, and the Minority Business Development Agency of the Department of Commerce.

ARTICLE 15. INTANGIBLE PROPERTY

[Applicable to Subrecipients. A similar provision for Contractors is included in the Uniform Federal Contract Provisions Rider for Federally Funded Procurement Contracts at section C(12).]

(a) Pursuant to 2 CFR § 200.315(d), the federal Government reserves a royalty-free, non-exclusive, and irrevocable right to obtain, reproduce, publish, or otherwise use, and to authorize others to use, for Government purposes: (a) the copyright in any work developed under the Agreement or subcontract; and (b) any rights of copyright to which a Subrecipient purchases ownership with grant support.

(b) Any reports, documents, data, photographs, deliverables, and/or other materials produced pursuant to the Agreement ("Copyrightable Materials"), and any and all drafts and/or other preliminary materials in any format related to such items produced pursuant to the contract, shall upon their creation become the exclusive property of the City. The Copyrightable Materials shall be considered "work-made-for-hire" within the meaning and purview of Section 101 of the United States Copyright Act, 17 U.S.C. § 101, and the City shall be the copyright owner thereof and of all aspects, elements and components thereof in which copyright protection might exist. To the extent that the Copyrightable Materials do not qualify as "work-made-for-hire," the Subrecipient hereby irrevocably transfers, assigns and conveys exclusive copyright ownership in and to the Copyrightable Materials to the City, free and clear of any liens, claims, or other encumbrances. The Subrecipient shall retain no copyright or intellectual property interest in the Copyrightable Materials. The Copyrightable Materials shall be used by the Subrecipient for no purpose other than in the performance of this Agreement without the prior written permission of the City. The City may grant the Subrecipient a license to use the Copyrightable Materials on such terms as determined by the City and set forth in the license.

(c) The Subrecipient acknowledges that the City may, in its sole discretion, register copyright in the Copyrightable Materials with the United States Copyright Office or any other government agency authorized to grant copyright registrations. The Subrecipient shall fully cooperate in this effort, and agrees to provide any and all documentation necessary to accomplish this.

(d) The Subrecipient represents and warrants that the Copyrightable Materials: (i) are wholly original material not published elsewhere (except for material that is in the public domain); (ii) do not violate any copyright law; (iii) do not constitute defamation or invasion of the right of privacy or publicity; and (iv) are not an infringement, of any kind, of the rights of any third party. To the extent that the Copyrightable Materials incorporate any non-original material, the Subrecipient has obtained all necessary permissions and clearances, in writing, for the use of such non-original material under this Contract, copies of which shall be provided to the City upon execution of this Contract.

(e) The Subrecipient shall promptly and fully report to the City any discovery or invention arising out of or developed in the course of performance of this Agreement and the Contractor shall promptly and fully report to the Government to make a determination as to whether patent protection on such invention shall be sought and how the rights in the invention or discovery, including rights under any patent issued thereon, shall be disposed of and administered in order to protect the public interest.

(f) If the Subrecipient publishes a work dealing with any aspect of performance under this Agreement, or with the results of such performance, the City shall have a royalty-free, non-exclusive irrevocable license to reproduce, publish, or otherwise use such work for City governmental purposes.

ARTICLE 16. HATCH ACT; LOBBYING; CONFLICTS OF INTEREST

[Applicable to Subrecipients.]

(a) Hatch Act: The Subrecipient agrees that no funds provided, nor personnel employed under this Agreement, shall be in any way or to any extent engaged in the conduct of political activities in violation of Chapter 15 of Title V of the U.S.C.

(b) Lobbying: The Subrecipient certifies, to the best of its knowledge and belief, that:

1. No Federal appropriated funds have been paid or will be paid, by or on behalf of it, to any person for influencing or attempting to influence an officer or employee of any agency, a Member of Congress, an officer or employee of Congress, or an employee of a Member of Congress in connection with the awarding of any Federal contract, the making of any Federal grant, the making of any Federal loan, the entering into of any cooperative agreement, and the extension, continuation, renewal, amendment, or modification of any Federal contract, grant, loan, or cooperative agreement;

2. If any funds other than Federal appropriated funds have been paid or will be paid to any person for influencing or attempting to influence an officer or employee of any agency, a Member of Congress, an officer or employee of Congress, or an employee of a Member of Congress in connection with this Federal contract, grant, loan, or cooperative agreement, it will complete and submit Standard Form-LLL, "Disclosure Form to Report Lobbying," (which is available on the HUD website or here: https://www.hudexchange.info/resources/documents/HUD-Form-Sflll.pdf) in accordance with its instructions; and

3. It will require that the language of this Article 16(b) be included in the award documents for all subawards at all tiers (including subcontracts, subgrants, and

contracts under grants, loans, and cooperative agreements) and that all sub-subrecipients shall certify and disclose accordingly.

4. This certification is a material representation of fact upon which reliance was placed when this transaction was made or entered into. Submission of this certification is a prerequisite for making or entering into this transaction imposed by 31 U.S.C. § 1352. Any person who fails to file the required certification shall be subject to a civil penalty of not less than $10,000 and not more than $100,000 for each such failure.

(c) Conflict of Interest: The Subrecipient agrees to abide by the provisions of 2 CFR §§ 200.112 and 200.318(c) and 24 CFR § 570.611.

ARTICLE 17. SUSPENSION AND TERMINATION

[Applicable to Subrecipients.]

(a) The City may take enforcement action against a Subrecipient for non-compliance, as described in 2 CFR §§ 200.338 and 200.339(a)(1) & (2), including suspension or termination.

(b) The City may terminate for convenience pursuant to 2 CFR § 200.339(a)(3).

ARTICLE 18. PERFORMANCE REQUIREMENTS AND REMEDIES

[Applicable to Contractors]

The Disaster Relief Appropriations Act, 2013 (Public L. 113-2) of January 29, 2013, requires contracts to contain "performance requirements and penalties." Accordingly, Contractor shall be subject to any performance requirements and remedial provisions and/or liquidated damages set forth in this Agreement. Contractor acknowledges that negative performance evaluations may impair its ability to win future contracts with the City as follows: Under City Procurement Policy Board (PPB) Rules section 4-01, Contractor is subject to performance evaluations at least once annually. The City shall enter such performance evaluations into the VENDEX system. To the extent allowed by the PPB Rules, such performance evaluations shall be considered by the City in:

(1) making a determination of the Contractor's responsibility or non-responsibility in future City procurements, under PPB Rule section 2-08(g)(1)(ii) and

(2) deciding to renew or not to renew the Agreement, under PPB Rule section 4-04(c)(10).

FED. EXHIBIT 1

NOTICE TO BIDDERS

NOTICE OF REQUIREMENT FOR AFFIRMATIVE ACTION TO ENSURE EQUAL EMPLOYMENT OPPORTUNITY (EXECUTIVE ORDER 11246, as amended) FOR ALL HUD COMMUNITY DEVELOPMENT FUNDED CONSTRUCTION CONTRACTS AND SUB-CONTRACTS IN EXCESS OF $10,000.

1. The Offeror's or Bidder's attention is called to the "Equal Opportunity Clause" and the "Standard Federal Equal Employment Opportunity Construction Contract Specifications" set forth above.

2. The goals and timetables for minority and female participation, expressed in percentage terms for the Contractor's aggregate workforce in each trade on all Construction Work in the covered area, are as follows:

Goals and Timetables for Minorities

Trade	Goal (Percent)		
Electricians	9.0	to	10.2
Carpenters	27.6	to	32.0
Steamfitters	12.2	to	13.5
Metal Lathers	24.6	to	25.6
Painters	28.6	to	26.0
Operating Engineers	25.6	to	26.0
Plumbers	12.0	to	14.5
Iron Workers (structural)	25.9	to	32.0
Elevator Constructors	5.5	to	6.5
Bricklayers	13.4	to	15.5
Asbestos Workers	22.8	to	28.0
Roofers	6.3	to	7.5
Iron Workers (ornamental)	22.4	to	23.0
Cement Masons	23.0	to	27.0
Glazers	16.0	to	20.0
Plasterers	15.8	to	18.0
Teamsters	22.0	to	22.5
Boilermakers	13.0	to	15.5
All Other	16.4	to	17.5

Goals and Timetables for Women

From April 1, 1980 until the present 6.9

These goals are applicable to all the Contractor's Construction Work (whether or not it is Federal or federally assisted) performed in the covered area. If the Contractor performs Construction Work in a geographical area located outside of the covered area, it shall apply the goals

established for such geographical area where the work is actually performed. With regard to this second area, the Contractor also is subject to the goals for both its federally involved and non-federally involved Construction.

The Contractor's compliance with the Executive Order and the regulations in 41 CFR Part 60-4 shall be based on its implementation of the Equal Opportunity Clause, specific affirmative action obligations required by the specifications set forth in 41 CFR 60-4.3(a), and its efforts to meet the goals. The hours of minority and female employment and training must be substantially uniform throughout the length of the contract, and in each trade, and the Contractor shall made a good faith effort to employ minorities and women evenly on each of its projects. The transfer of minority or female employees or trainees from Contractor to Contractor or from project to project for the sole purpose of meeting the Contractor's goals shall be a violation of the contract, the Executive Order and the regulations in 41 CFR Part 60-4. Compliance with the goals will be measured against the total work hours performed.

3. The Contractor shall provide written notification to the Director of the Office of Federal Contract Compliance Programs within 10 working days of award of any Construction subcontract in excess of $10,000 at any tier for Construction Work under the contract resulting from this solicitation. The notification shall list the name, address and telephone number of the subcontractor; employer identification number of the subcontractor; estimated dollar amount of the subcontract; estimated starting and completion dates of the subcontract; and the geographical area in which the contract is to be performed.

4. As used in this Agreement, the "covered area" is the City of New York.

EXHIIBIT 2

EXHIBIT 3

INVESTIGATIONS CLAUSE, CONFLICTS OF INTEREST CLAUSE; AND EXECUTIVE ORDER NO. 50

I. Investigations Clause

A. The Contractor agrees to cooperate fully and faithfully with any investigation, audit or inquiry conducted by a State or City agency or authority that is empowered directly or by designation to compel the attendance of witnesses and to examine witnesses under oath, or conducted by the Inspector General of a governmental agency that is a party in interest to the transaction, submitted bid, submitted proposal, contract, lease, permit, or license that is the subject of the investigation, audit or inquiry.

B. 1. If any person who has been advised that his or her statement, and any information from such statement, will not be used against him or her in any subsequent criminal proceeding refuses to testify before a grand jury or other governmental agency or authority empowered directly or by designation to compel the attendance of witnesses and to examine witnesses under oath concerning the award of or performance under any transaction, agreement, lease, permit, contract, or license entered into with the City, or State, or any political subdivision or public authority thereof, or the Port Authority of New York and New Jersey, or any local development corporation within the City, or any public benefit corporation organized under the Laws of the State, or;

2. If any person refuses to testify for a reason other than the assertion of his or her privilege against self-incrimination in an investigation, audit or inquiry conducted by a City or State governmental agency or authority empowered directly or by designation to compel the attendance of witnesses and to take testimony under oath, or by the Inspector General of the governmental agency that is a party in interest in, and is seeking testimony concerning the award of, or performance under, any transaction, agreement, lease, permit, contract, or license entered into with the City, the State, or any political subdivision thereof or any local development corporation within the City, then;

C. 1. The Commissioner or Agency Head whose agency is a party in interest to the transaction, submitted bid, submitted proposal, contract, lease, permit, or license shall convene a hearing, upon not less than five (5) days' written notice to the parties involved to determine if any penalties should attach for the failure of a person to testify.

2. If any non-governmental party to the hearing requests an adjournment, the Commissioner or Agency Head who convened the hearing may, upon granting the adjournment, suspend any contract, lease, permit, or license pending the final determination pursuant to Paragraph E below without the City incurring any penalty or damages for delay or otherwise.

D. The penalties that may attach after a final determination by the Commissioner or Agency Head may include but shall not exceed:

1. The disqualification for a period not to exceed five (5) years from the date of an adverse determination for any person, or any entity of which such person was a member at the time the testimony was sought, from submitting bids for, or transacting business with, or entering into or obtaining any contract, lease, permit or license with or from the City; and/or

2. The cancellation or termination of any and all such existing City contracts, leases, permits or licenses that the refusal to testify concerns and that have not been assigned as permitted under this agreement, nor the proceeds of which pledged, to an unaffiliated and unrelated institutional lender for fair value prior to the issuance of the notice scheduling the hearing, without the City incurring any penalty or damages on account of such cancellation or termination; monies lawfully due for goods delivered, work done, rentals, or fees accrued prior to the cancellation or termination shall be paid by the City.

E. The Commissioner or Agency Head shall consider and address in reaching his or her determination and in assessing an appropriate penalty the factors in Paragraphs (1) and (2) below. He or she may also consider, if relevant and appropriate, the criteria established in Paragraphs (3) and (4) below, in addition to any other information that may be relevant and appropriate:

1. The party's good faith endeavors or lack thereof to cooperate fully and faithfully with any governmental investigation or audit, including but not limited to the discipline, discharge, or disassociation of any person failing to testify, the production of accurate and complete books and records, and the forthcoming testimony of all other members, agents, assignees or fiduciaries whose testimony is sought.

2. The relationship of the person who refused to testify to any entity that is a party to the hearing, including, but not limited to, whether the person whose testimony is sought has an ownership interest in the entity and/or the degree of authority and responsibility the person has within the entity.

3. The nexus of the testimony sought to the subject entity and its contracts, leases, permits or licenses with the City.

4. The effect a penalty may have on an unaffiliated and unrelated party or entity that has a significant interest in an entity subject to penalties under Paragraph D above, provided that the party or entity has given actual notice to the Commissioner or Agency Head upon the acquisition of the interest, or at the hearing called for in Paragraph (C)(1) above gives notice and proves that such interest was previously acquired. Under either circumstance, the party or entity must present evidence at the hearing demonstrating the potential adverse impact a penalty will have on such person or entity.

F. Definitions

1. The term "license" or "permit" as used in this Section shall be defined as a license, permit, franchise, or concession not granted as a matter of right.

2. The term "person" as used in this Section shall be defined as any natural person doing business alone or associated with another person or entity as a partner, director, officer, principal or employee.

3. The term "entity" as used in this Section shall be defined as any firm, partnership, corporation, association, or person that receives monies, benefits, licenses, leases, or permits from or through the City, or otherwise transacts business with the City.

4. The term "member" as used in this Section shall be defined as any person associated with another person or entity as a partner, director, officer, principal, or employee.

G. In addition to and notwithstanding any other provision of this agreement, the Commissioner or Agency Head may in his or her sole discretion terminate this agreement upon not less than three (3) Days written notice in the event the Contractor fails to promptly report in writing to the City Commissioner of Investigation any solicitation of money, goods, requests for future employment or other benefits or thing of value, by or on behalf of any employee of the City or other person or entity for any purpose that may be related to the procurement or obtaining of this agreement by the Contractor, or affecting the performance of this agreement.

II. Conflicts of Interest

A. The Contractor represents and warrants that neither it nor any of its directors, officers, members, partners or employees, has any interest nor shall they acquire any interest, directly or indirectly, which conflicts in any manner or degree with the performance of this agreement. The Contractor further represents and warrants that no person having such interest or possible interest shall be employed by or connected with the Contractor in the performance of this agreement.

B. Consistent with Charter § 2604 and other related provisions of the Charter, the Admin. Code and the New York State Penal Law, no elected official or other officer or employee of the City, nor any person whose salary is payable, in whole or in part, from the City Treasury, shall participate in any decision relating to this agreement which affects his or her personal interest or the interest of any corporation, partnership or other entity in which he or she is, directly or indirectly, interested; nor shall any such official, officer, employee, or person have any interest in, or in the proceeds of, this agreement. This Paragraph B shall not prevent directors, officers, members, partners, or employees of the Contractor from participating in decisions relating to this agreement where their sole personal interest is in the Contractor.

C. The Contractor shall not employ a person or permit a person to serve as a member of the Board of Directors or as an officer of the Contractor if such employment or service would violate Chapter 68 of the Charter.

III. Non-Discrimination: E.O. 50 -- Equal Employment Opportunity

A. This agreement is subject to the requirements of City Executive Order No. 50 (1980) ("E.O. 50"), as revised, and the rules set forth at 66 RCNY § 10-01 et seq. No agreement will be awarded unless and until these requirements have been complied with in their entirety. The Contractor agrees that it:

1. Will not discriminate unlawfully against any employee or applicant for employment because of race, creed, color, national origin, sex, age, disability, marital status, sexual orientation or citizenship status with respect to all employment decisions including, but not limited to, recruitment, hiring, upgrading, demotion, downgrading, transfer, training, rates of pay or other forms of compensation, layoff, termination, and all other terms and conditions of employment;

2. Will not discriminate unlawfully in the selection of subcontractors on the basis of the owners', partners' or shareholders' race, color, creed, national origin, sex, age, disability, marital status, sexual orientation, or citizenship status;

3. Will state in all solicitations or advertisements for employees placed by or on behalf of the Contractor that all qualified applicants will receive consideration for employment without unlawful discrimination based on race, color, creed, national origin, sex, age, disability, marital status, sexual orientation or citizenship status, and that it is an equal employment opportunity employer;

4. Will send to each labor organization or representative of workers with which it has a collective bargaining agreement or other contract or memorandum of understanding, written notification of its equal employment opportunity commitments under E.O. 50 and the rules and regulations promulgated thereunder;

5. Will furnish before this agreement is awarded all information and reports including an Employment Report which are required by E.O. 50, the rules and regulations promulgated thereunder, and orders of the City Department of Small Business Services, Division of Labor Services ("DLS"); and

6. Will permit DLS to have access to all relevant books, records, and accounts for the purposes of investigation to ascertain compliance with such rules, regulations, and orders.

B. The Contractor understands that in the event of its noncompliance with the nondiscrimination clauses of this agreement or with any of such rules, regulations, or orders, such noncompliance shall constitute a material breach of this agreement and noncompliance with E.O. 50 and the rules and regulations promulgated thereunder. After a hearing held pursuant to the rules of DLS, the Director of DLS may direct the Commissioner to impose any or all of the following sanctions:

1. Disapproval of the Contractor; and/or

2. Suspension or termination of the agreement; and/or

3. Declaring the Contractor in default; and/or

4. In lieu of any of the foregoing sanctions, imposition of an employment program.

C. Failure to comply with E.O. 50 and the rules and regulations promulgated thereunder in one or more instances may result in the Department declaring the Contractor to be non-responsible.

D. The Contractor agrees to include the provisions of the foregoing Paragraphs in every subcontract or purchase order in excess of One Hundred Thousand Dollars ($100,000) to

which it becomes a party unless exempted by E.O. 50 and the rules and regulations promulgated thereunder, so that such provisions will be binding upon each subcontractor or vendor. The Contractor will take such action with respect to any subcontract or purchase order as may be directed by the Director of DLS as a means of enforcing such provisions including sanctions for noncompliance. A supplier of unfinished products to the Contractor needed to produce the item contracted for shall not be considered a subcontractor or vendor for purposes of this Paragraph.

E. The Contractor further agrees that it will refrain from entering into any subcontract or modification thereof subject to E.O. 50 and the rules and regulations promulgated thereunder with a subcontractor who is not in compliance with the requirements of E.O. 50 and the rules and regulations promulgated thereunder. A supplier of unfinished products to the Contractor needed to produce the item contracted for shall not be considered a subcontractor for purposes of this Paragraph.

F. Nothing contained in this Section shall be construed to bar any religious or denominational institution or organization, or any organization operated for charitable or educational purposes, that is operated, supervised or controlled by or in connection with a religious organization, from lawfully limiting employment or lawfully giving preference to persons of the same religion or denomination or from lawfully making such selection as is calculated by such organization to promote the religious principles for which it is established or maintained.

Applicability

The Project or Program to which the construction work covered by this contract pertains is being assisted by the United States of America and the following Federal Labor Standards Provisions are included in this Contract pursuant to the provisions applicable to such Federal assistance.

A. 1. (i) Minimum Wages. All laborers and mechanics employed or working upon the site of the work, will be paid unconditionally and not less often than once a week, and without subsequent deduction or rebate on any account (except such payroll deductions as are permitted by regulations issued by the Secretary of Labor under the Copeland Act (29 CFR Part 3), the full amount of wages and bona fide fringe benefits (or cash equivalents thereof) due at time of payment computed at rates not less than those contained in the wage determination of the Secretary of Labor which is attached hereto and made a part hereof, regardless of any contractual relationship which may be alleged to exist between the contractor and such laborers and mechanics. Contributions made or costs reasonably anticipated for bona fide fringe benefits under Section l(b)(2) of the Davis-Bacon Act on behalf of laborers or mechanics are considered wages paid to such laborers or mechanics, subject to the provisions of 29 CFR 5.5(a)(1)(iv); also, regular contributions made or costs incurred for more than a weekly period (but not less often than quarterly) under plans, funds, or programs, which cover the particular weekly period, are deemed to be constructively made or incurred during such weekly period.

Such laborers and mechanics shall be paid the appropriate wage rate and fringe benefits on the wage determination for the classification of work actually performed, without regard to skill, except as provided in 29 CFR 5.5(a)(4). Laborers or mechanics performing work in more than one classification may be compensated at the rate specified for each classification for the time actually worked therein: Provided, That the employer's payroll records accurately set forth the time spent in each classification in which work is performed. The wage determination (including any additional classification and wage rates conformed under 29 CFR 5.5(a)(1)(ii) and the Davis-Bacon poster (WH-1321) shall be posted at all times by the contractor and its subcontractors at the site of the work in a prominent and accessible, place where it can be easily seen by the workers.

(ii) (a) Any class of laborers or mechanics which is not listed in the wage determination and which is to be employed under the contract shall be classified in conformance with the wage determination. HUD shall approve an additional classification and wage rate and fringe benefits therefor only when the following criteria have been met:

(1) The work to be performed by the classification requested is not performed by a classification in the wage determination; and

(2) The classification is utilized in the area by the construction industry; and

(3) The proposed wage rate, including any bona fide fringe benefits, bears a reasonable relationship to the wage rates contained in the wage determination.

(b) If the contractor and the laborers and mechanics to be employed in the classification (if known), or their representatives, and HUD or its designee agree on the classification and wage rate (including the amount designated for fringe benefits where appropriate), a report of the action taken shall be sent by HUD or its designee to the Administrator of the Wage and Hour Division, Employment Standards Administration, U.S. Department of Labor, Washington, D.C. 20210. The Administrator, or an authorized representative, will approve, modify, or disapprove every additional classification action within 30 days of receipt and so advise HUD or its designee or will notify HUD or its designee within the 30-day period that additional time is necessary. (Approved by the Office of Management and Budget under OMB control number 1215-0140.)

(c) In the event the contractor, the laborers or mechanics to be employed in the classification or their representatives, and HUD or its designee do not agree on the proposed classification and wage rate (including the amount designated for fringe benefits, where appropriate), HUD or its designee shall refer the questions, including the views of all interested parties and the recommendation of HUD or its designee, to the Administrator for determination. The Administrator, or an authorized representative, will issue a determination within 30 days of receipt and so advise HUD or its designee or will notify HUD or its designee within the 30-day period that additional time is necessary. (Approved by the Office of Management and Budget under OMB Control Number 1215-0140.)

(d) The wage rate (including fringe benefits where appropriate) determined pursuant to subparagraphs (1)(ii)(b) or (c) of this paragraph, shall be paid to all workers performing work in the classification under this contract from the first day on which work is performed in the classification.

(iii) Whenever the minimum wage rate prescribed in the contract for a class of laborers or mechanics includes a fringe benefit which is not expressed as an hourly rate, the contractor shall either pay the benefit as stated in the wage determination or shall pay another bona fide fringe benefit or an hourly cash equivalent thereof.

(iv) If the contractor does not make payments to a trustee or other third person, the contractor may consider as part

of the wages of any laborer or mechanic the amount of any costs reasonably anticipated in providing bona fide fringe benefits under a plan or program, Provided, That the Secretary of Labor has found, upon the written request of the contractor, that the applicable standards of the Davis-Bacon Act have been met. The Secretary of Labor may require the contractor to set aside in a separate account assets for the meeting of obligations under the plan or program. (Approved by the Office of Management and Budget under OMB Control Number 1215-0140.)

2. Withholding. HUD or its designee shall upon its own action or upon written request of an authorized representative of the Department of Labor withhold or cause to be withheld from the contractor under this contract or any other Federal contract with the same prime contractor, or any other Federally-assisted contract subject to Davis-Bacon prevailing wage requirements, which is held by the same prime contractor so much of the accrued payments or advances as may be considered necessary to pay laborers and mechanics, including apprentices, trainees and helpers, employed by the contractor or any subcontractor the full amount of wages required by the contract In the event of failure to pay any laborer or mechanic, including any apprentice, trainee or helper, employed or working on the site of the work, all or part of the wages required by the contract, HUD or its designee may, after written notice to the contractor, sponsor, applicant, or owner, take such action as may be necessary to cause the suspension of any further payment, advance, or guarantee of funds until such violations have ceased. HUD or its designee may, after written notice to the contractor, disburse such amounts withheld for and on account of the contractor or subcontractor to the respective employees to whom they are due. The Comptroller General shall make such disbursements in the case of direct Davis-Bacon Act contracts.

3. (i) Payrolls and basic records. Payrolls and basic records relating thereto shall be maintained by the contractor during the course of the work preserved for a period of three years thereafter for all laborers and mechanics working at the site of the work. Such records shall contain the name, address, and social security number of each such worker, his or her correct classification, hourly rates of wages paid (including rates of contributions or costs anticipated for bona fide fringe benefits or cash equivalents thereof of the types described in Section l(b)(2)(B) of the Davis-bacon Act), daily and weekly number of hours worked, deductions made and actual wages paid. Whenever the Secretary of Labor has found under 29 CFR 5.5 (a)(1)(iv) that the wages of any laborer or mechanic include the amount of any costs reasonably anticipated in providing benefits under a plan or program described in Section l(b)(2)(B) of the Davis-Bacon Act, the contractor shall maintain records which show that the commitment to provide such benefits is enforceable, that the plan or program is financially responsible, and that the plan or program has been communicated in writing to the laborers or mechanics affected, and records which show the costs anticipated or the actual cost incurred in providing such benefits. Contractors employing apprentices or trainees under approved programs shall maintain written evidence of the registration of apprenticeship programs and certification of trainee programs, the registration of the apprentices and trainees, and the ratios and wage rates prescribed in the applicable programs. (Approved by the Office of Management and Budget under OMB Control Numbers 1215-0140 and 1215-0017.)

(ii) (a) The contractor shall submit weekly for each week in which any contract work is performed a copy of all payrolls to HUD or its designee if the agency is a party to the contract, but if the agency is not such a party, the contractor will submit the payrolls to the applicant sponsor, or owner, as the case may be, for transmission to HUD or its designee. The payrolls submitted shall set out accurately and completely all of the information required to be maintained under 29 CFR 5.5(a)(3)(i) except that full social security numbers and home addresses shall not be included on weekly transmittals. Instead the payrolls shall only need to include an individually identifying number for each employee (e.g., the last four digits of the employee's social security number). The required weekly payroll information may be submitted in any form desired. Optional Form WH-347 is available for this purpose from the Wage and Hour Division Web site at *http://www.dol.gov/esa/whd/forms/wh347instr.htm* or its successor site. The prime contractor is responsible for the submission of copies of payrolls by all subcontractors. Contractors and subcontractors shall maintain the full social security number and current address of each covered worker, and shall provide them upon request to HUD or its designee if the agency is a party to the contract, but if the agency is not such a party, the contractor will submit the payrolls to the applicant sponsor, or owner, as the case may be, for transmission to HUD or its designee, the contractor, or the Wage and Hour Division of the Department of Labor for purposes of an investigation or audit of compliance with prevailing wage requirements. It is not a violation of this subparagraph for a prime contractor to require a subcontractor to provide addresses and social security numbers to the prime contractor for its own records, without weekly submission to HUD or its designee. (Approved by the Office of Management and Budget under OMB Control Number 1215-0149.)

(b) Each payroll submitted shall be accompanied by a "Statement of Compliance," signed by the contractor or subcontractor or his or her agent who pays or supervises the payment of the persons employed under the contract and shall certify the following:

(1) That the payroll for the payroll period contains the information required to be provided under 29 CFR 5.5 (a)(3)(ii), the appropriate information is being maintained under 29 CFR 5.5(a)(3)(i), and that such information is correct and complete;

(2) That each laborer or mechanic (including each helper, apprentice, and trainee) employed on the contract during the payroll period has been paid the full weekly wages earned, without rebate, either directly or indirectly, and that no deductions have been made either directly or indirectly from the full wages earned, other than permissible deductions as set forth in 29 CFR Part 3;

(3) That each laborer or mechanic has been paid not less than the applicable wage rates and fringe benefits or cash equivalents for the classification of work performed, as specified in the applicable wage determination incorporated into the contract.

(c) The weekly submission of a properly executed certification set forth on the reverse side of Optional Form WH-347 shall satisfy the requirement for submission of the "Statement of Compliance" required by subparagraph A.3.(ii)(b).

(d) The falsification of any of the above certifications may subject the contractor or subcontractor to civil or criminal prosecution under Section 1001 of Title 18 and Section 231 of Title 31 of the United States Code.

(iii) The contractor or subcontractor shall make the records required under subparagraph A.3.(i) available for inspection, copying, or transcription by authorized representatives of HUD or its designee or the Department of Labor, and shall permit such representatives to interview employees during working hours on the job. If the contractor or subcontractor fails to submit the required records or to make them available, HUD or its designee may, after written notice to the contractor, sponsor, applicant or owner, take such action as may be necessary to cause the suspension of any further payment, advance, or guarantee of funds. Furthermore, failure to submit the required records upon request or to make such records available may be grounds for debarment action pursuant to 29 CFR 5.12.

4. Apprentices and Trainees.

(i) Apprentices. Apprentices will be permitted to work at less than the predetermined rate for the work they performed when they are employed pursuant to and individually registered in a bona fide apprenticeship program registered with the U.S. Department of Labor, Employment and Training Administration, Office of Apprenticeship Training, Employer and Labor Services, or with a State Apprenticeship Agency recognized by the Office, or if a person is employed in his or her first 90 days of probationary employment as an apprentice in such an apprenticeship program, who is not individually registered in the program, but who has been certified by the Office of Apprenticeship Training, Employer and Labor Services or a State Apprenticeship Agency (where appropriate) to be eligible for probationary employment as an apprentice. The allowable ratio of apprentices to journeymen on the job site in any craft classification shall not be greater than the ratio permitted to the contractor as to the entire work force under the registered program. Any worker listed on a payroll at an apprentice wage rate, who is not registered or otherwise employed as stated above, shall be paid not less than the applicable wage rate on the wage determination for the classification of work actually performed. In addition, any apprentice performing work on the job site in excess of the ratio permitted under the registered program shall be paid not less than the applicable wage rate on the wage determination for the work actually performed. Where a contractor is performing construction on a project in a locality other than that in which its program is registered, the ratios and wage rates (expressed in percentages of the journeyman's hourly rate) specified in the contractor's or subcontractor's registered program shall be observed. Every apprentice must be paid at not less than the rate specified in the registered program for the apprentice's level of progress, expressed as a percentage of the journeymen hourly rate specified in the applicable wage determination. Apprentices shall be paid fringe benefits in accordance with the provisions of the apprenticeship program. If the apprenticeship program does not specify fringe benefits, apprentices must be paid the full amount of fringe benefits listed on the wage determination for the applicable classification. If the Administrator determines that a different practice prevails for the applicable apprentice classification, fringes shall be paid in accordance with that determination. In the event the Office of Apprenticeship Training, Employer and Labor Services, or a State Apprenticeship Agency recognized by the Office, withdraws approval of an apprenticeship program, the contractor will no longer be permitted to utilize apprentices at less than the applicable predetermined rate for the work performed until an acceptable program is approved.

(ii) Trainees. Except as provided in 29 CFR 5.16, trainees will not be permitted to work at less than the predetermined rate for the work performed unless they are employed pursuant ',to and individually registered in a program which has received prior approval, evidenced by formal certification by the U.S. Department of Labor, Employment and Training Administration. The ratio of trainees to journeymen on the job site shall not be greater than permitted under the plan approved by the Employment and Training Administration. Every trainee must be paid at not less than the rate specified in the approved program for the trainee's level of progress, expressed as a percentage of the journeyman hourly rate specified in the applicable wage determination. Trainees shall be paid fringe benefits in accordance with the provisions of the trainee program. If the trainee program does not mention fringe benefits, trainees shall be paid the full amount of fringe benefits listed on the wage determination unless the Administrator of the Wage and Hour Division determines that there is an apprenticeship program associated with the corresponding journeyman wage rate on the wage determination which provides for less than full fringe benefits for apprentices. Any employee listed on the payroll at a trainee rate who is not registered and participating in a training plan approved by

the Employment and Training Administration shall be paid not less than the applicable wage rate on the wage determination for the work actually performed. In addition, any trainee performing work on the job site in excess of the ratio permitted under the registered program shall be paid not less than the applicable wage rate on the wage determination for the work actually performed. In the event the Employment and Training Administration withdraws approval of a training program, the contractor will no longer be permitted to utilize trainees at less than the applicable predetermined rate for the work performed until an acceptable program is approved.

(iii) Equal employment opportunity. The utilization of apprentices, trainees and journeymen under 29 CFR Part 5 shall be in conformity with the equal employment opportunity requirements of Executive Order 11246, as amended, and 29 CFR Part 30.

5. Compliance with Copeland Act requirements. The contractor shall comply with the requirements of 29 CFR Part 3 which are incorporated by reference in this contract

6. Subcontracts. The contractor or subcontractor will insert in any subcontracts the clauses contained in subparagraphs 1 through 11 in this paragraph A and such other clauses as HUD or its designee may by appropriate instructions require, and a copy of the applicable prevailing wage decision, and also a clause requiring the subcontractors to include these clauses in any lower tier subcontracts. The prime contractor shall be responsible for the compliance by any subcontractor or lower tier subcontractor with all the contract clauses in this paragraph.

7. Contract termination; debarment. A breach of the contract clauses in 29 CFR 5.5 may be grounds for termination of the contract and for debarment as a contractor and a subcontractor as provided in 29 CFR 5.12.

8. Compliance with Davis-Bacon and Related Act Requirements. All rulings and interpretations of the Davis-Bacon and Related Acts contained in 29 CFR Parts 1, 3, and 5 are herein incorporated by reference in this contract

9. Disputes concerning labor standards. Disputes arising out of the labor standards provisions of this contract shall not be subject to the general disputes clause of this contract. Such disputes shall be resolved in accordance with the procedures of the Department of Labor set forth in 29 CFR Parts 5, 6, and 7. Disputes within the meaning of this clause include disputes between the contractor (or any of its subcontractors) and HUD or its designee, the U.S. Department of Labor, or the employees or their representatives.

10. (i) Certification of Eligibility. By entering into this contract the contractor certifies that neither it (nor he or she) nor any person or firm who has an interest in the contractor's firm is a person or firm ineligible to be awarded Government contracts by virtue of Section 3(a) of the Davis-Bacon Act or 29 CFR 5.12(a)(1) or to be awarded HUD contracts or participate in HUD programs pursuant to 24 CFR Part 24.

(ii) No part of this contract shall be subcontracted to any person or firm ineligible for award of a Government contract by virtue of Section 3(a) of the Davis-Bacon Act or 29 CFR 5.12(a)(1) or to be awarded HUD contracts or participate in HUD programs pursuant to 24 CFR Part 24.

(iii) The penalty for making false statements is prescribed in the U.S. Criminal Code, 18 U.S.C. 1001. Additionally, U.S. Criminal Code, Section 1 01 0, Title 18, U.S.C., "Federal Housing Administration transactions", provides in part: "Whoever, for the purpose of . . . influencing in any way the action of such Administration..... makes, utters or publishes any statement knowing the same to be false..... shall be fined not more than $5,000 or imprisoned not more than two years, or both."

11. Complaints, Proceedings, or Testimony by Employees. No laborer or mechanic to whom the wage, salary, or other labor standards provisions of this Contract are applicable shall be discharged or in any other manner discriminated against by the Contractor or any subcontractor because such employee has filed any complaint or instituted or caused to be instituted any proceeding or has testified or is about to testify in any proceeding under or relating to the labor standards applicable under this Contract to his employer.

B. Contract Work Hours and Safety Standards Act. The provisions of this paragraph B are applicable where the amount of the prime contract exceeds $100,000. As used in this paragraph, the terms "laborers" and "mechanics" include watchmen and guards.

(1) Overtime requirements. No contractor or subcontractor contracting for any part of the contract work which may require or involve the employment of laborers or mechanics shall require or permit any such laborer or mechanic in any workweek in which the individual is employed on such work to work in excess of 40 hours in such workweek unless such laborer or mechanic receives compensation at a rate not less than one and one-half times the basic rate of pay for all hours worked in excess of 40 hours in such workweek.

(2) Violation; liability for unpaid wages; liquidated damages. In the event of any violation of the clause set forth in subparagraph (1) of this paragraph, the contractor and any subcontractor responsible therefor shall be liable for the unpaid wages. In addition, such contractor and subcontractor shall be liable to the United States (in the case of work done under contract for the District of Columbia or a territory, to such District or to such territory), for liquidated damages. Such liquidated damages shall be computed with respect to each individual laborer or mechanic, including watchmen and guards, employed in violation of the clause set forth in subparagraph (1) of this paragraph, in the sum of $10 for each calendar day on which such individual was required or permitted to work in excess of the standard workweek of 40 hours without payment of the overtime wages required by the clause set forth in sub paragraph (1) of this paragraph.

(3) Withholding for unpaid wages and liquidated damages. HUD or its designee shall upon its own action or upon written request of an authorized representative of the Department of Labor withhold or cause to be withheld, from any moneys payable on account of work performed by the contractor or subcontractor under any such contract or any other Federal contract with the same prime contract, or any other Federally-assisted contract subject to the Contract Work Hours and Safety Standards Act which is held by the same prime contractor such sums as may be determined to be necessary to satisfy any liabilities of such contractor or subcontractor for unpaid wages and liquidated damages as provided in the clause set forth in subparagraph (2) of this paragraph.

(4) Subcontracts. The contractor or subcontractor shall insert in any subcontracts the clauses set forth in subparagraph (1) through (4) of this paragraph and also a clause requiring the subcontractors to include these clauses in any lower tier subcontracts. The prime contractor shall be responsible for compliance by any subcontractor or lower tier subcontractor with the clauses set forth in subparagraphs (1) through (4) of this paragraph.

C. Health and Safety. The provisions of this paragraph C are applicable where the amount of the prime contract exceeds $100,000.

(1) No laborer or mechanic shall be required to work in surroundings or under working conditions which are unsanitary, hazardous, or dangerous to his health and safety as determined under construction safety and health standards promulgated by the Secretary of Labor by regulation.

(2) The Contractor shall comply with all regulations issued by the Secretary of Labor pursuant to Title 29 Part 1926 and failure to comply may result in imposition of sanctions pursuant to the Contract Work Hours and Safety Standards Act, (Public Law 91-54, 83 Stat 96). 40 USC 3701 et seq.

(3) The contractor shall include the provisions of this paragraph in every subcontract so that such provisions will be binding on each subcontractor. The contractor shall take such action with respect to any subcontractor as the Secretary of Housing and Urban Development or the Secretary of Labor shall direct as a means of enforcing such provisions.

"General Decision Number: NY20210003 10/15/2021

Superseded General Decision Number: NY20200003

State: New York

Construction Types: Building, Heavy, Highway and Residential

Counties: Bronx, Kings, New York, Queens and Richmond
Counties in New York.

BUILDING & RESIDENTIAL CONSTRUCTION PROJECTS (includes single family homes and apartments up to and including 4 stories), HEAVY AND HIGHWAY CONSTRUCTION PROJECTS

Note: Under Executive Order (EO) 13658, an hourly minimum wage of $10.95 for calendar year 2021 applies to all contracts subject to the Davis-Bacon Act for which the contract is awarded (and any solicitation was issued) on or after January 1, 2015. If this contract is covered by the EO, the contractor must pay all workers in any classification listed on this wage determination at least $10.95 per hour (or the applicable wage rate listed on this wage determination, if it is higher) for all hours spent performing on the contract in calendar year 2021. If this contract is covered by the EO and a classification considered necessary for performance of work on the contract does not appear on this wage determination, the contractor must pay workers in that classification at least the wage rate determined through the conformance process set forth in 29 CFR 5.5(a)(1)(ii) (or the EO minimum wage rate,if it is higher than the conformed wage rate). The EO minimum wage rate will be adjusted annually. Please note that this EO applies to the above-mentioned types of contracts entered into by the federal government that are subject to the Davis-Bacon Act itself, but it does not apply to contracts subject only to the Davis-Bacon Related Acts, including those set forth at 29 CFR 5.1(a)(2)-(60). Additional information on contractor requirements and worker protections under the EO is available at www.dol.gov/whd/govcontracts.

Modification Number	Publication Date
0	01/01/2021
1	03/12/2021
2	04/16/2021
3	05/21/2021
4	06/04/2021
5	07/02/2021
6	07/16/2021
7	07/23/2021
8	08/06/2021
9	08/13/2021
10	09/03/2021
11	09/10/2021
12	10/08/2021
13	10/15/2021

ASBE0012-001 12/30/2019

	Rates	Fringes
Asbestos Workers/Insulator		

```
     Includes application of
     all insulating materials,
     protective coverings,
     coatings and finishes to
     all types of mechanical
     systems....................$ 69.01            34.16
HAZARDOUS MATERIAL HANDLER.......$ 39.00            12.75
-----------------------------------------------------------------
 BOIL0005-001 01/01/2021

                                  Rates          Fringes

BOILERMAKER......................$ 63.38      33%+47.22+a

FOOTNOTE:

  a. PAID HOLIDAYS:  New Year's Day, Thanksgiving Day, Memorial
  Day, Independence Day, Labor Day and Good Friday, Friday
  after Thanksgiving, Christmas Eve Day and New Year's Eve

-----------------------------------------------------------------
 BRNY0001-001 07/01/2020

                                  Rates          Fringes

BRICKLAYER.......................$ 62.54            29.40
MASON - STONE....................$ 67.88            36.91
-----------------------------------------------------------------
 BRNY0001-002 07/01/2020

                                  Rates          Fringes

Pointer, cleaner and caulker.....$ 55.97            29.64
-----------------------------------------------------------------
 BRNY0004-001 07/05/2021

                                  Rates          Fringes

MARBLE MASON.....................$ 61.73            37.91
-----------------------------------------------------------------
 BRNY0007-001 07/01/2021

                                  Rates          Fringes

TERRAZZO FINISHER................$ 55.21            36.97
TERRAZZO WORKER/SETTER...........$ 58.46            38.09
-----------------------------------------------------------------
 BRNY0007-002 06/01/2021

                                  Rates          Fringes

TILE FINISHER....................$ 47.26            32.61
-----------------------------------------------------------------
 BRNY0020-001 07/05/2021

                                  Rates          Fringes

MARBLE FINISHER..................$ 48.87            35.40
-----------------------------------------------------------------
 BRNY0024-001 01/01/2018

                                  Rates          Fringes

BRICKLAYER
     MARBLE POLISHERS............$ 40.89            26.69
```

BRNY0052-001 12/02/2019

	Rates	Fringes
Tile Layer	$ 59.73	35.37

CARP0001-003 07/01/2021

	Rates	Fringes
CARPENTER (HEAVY & HIGHWAY)	$ 56.93	52.79

CARP0001-009 07/01/2021

	Rates	Fringes
CARPENTER (BUILDING & RESIDENTIAL)		
Carpenters	$ 54.75	46.43
Soft Floor Layers	$ 54.75	46.43

CARP0740-001 07/01/2021

	Rates	Fringes
MILLWRIGHT	$ 57.00	54.06

CARP1556-006 07/01/2021

	Rates	Fringes
Dock Builder & Piledrivermen	$ 56.93	52.79

CARP1556-007 07/01/2021

	Rates	Fringes
Diver Tender	$ 51.34	52.79
Diver	$ 71.80	52.79

CARP1556-011 07/01/2021

	Rates	Fringes
Carpenters:		
TIMBERMEN	$ 52.05	52.24

ELEC0003-001 04/11/2019

	Rates	Fringes
ELECTRICIAN		
Electricians	$ 56.00	76.725%+16.25
Jobbing, and maintenance and repair work	$ 28.50	51.243%+7.50+a

PAID HOLIDAYS:

a. New Years Day, Martin Luther King, Jr.'s Birthday, Washington's Birthday, Memorial Day, Independence Day, Labor Day, Columbus Day, Election Day, Thanksgiving Day, the day after Thanksgiving Day, and Christmas Day

---

ELEC1049-001 03/31/2019

QUEENS COUNTY

	Rates	Fringes
Line Construction (Substation and Switching structures pipe type cable installation and maintenance jobs or projects; Railroad electrical distribution/transmission systems maintenance (when work is not performed by railroad employees) Overhead and Underground transmission/distribution line work. Fiber optic, telephone cable and equipment)		
Groundman	$ 34.45	23.06
Heavy Equipment Operator	$ 45.93	28.24
Lineman and Cable Splicer	$ 57.41	29.72
Tree Trimmer	$ 30.09	14.12

ELEV0001-002 03/17/2018

	Rates	Fringes
ELEVATOR MECHANIC		
Elevator Constructor	$ 64.48	36.21+a+b
Modernization and Repair	$ 50.49	40.399+a+b

FOOTNOTE:

a. PAID HOLIDAYS: New Year's Day, Good Friday, President's Day, Memorial Day, Independence Day, Labor Day, Columbus Day, Veteran's Day, Thanksgiving Day, Friday after Thanksgiving, and Christmas Day.

b. PAID VACATION: An employee who has worked less than 5 years shall recieve vacation pay credit on the basis of 4% of his hourly rate for all hours worked; an employee who has worked 5 to 15 years shall receive vacation pay credit on the basis of 6% of his hourly rate for all hours worked; an employee who has worked 15 or more years shall receive vacation pay credit on the basis of 8% of his hourly rate for all hours worked.

ENGI0014-001 11/01/2020

	Rates	Fringes
POWER EQUIPMENT OPERATOR (HEAVY & HIGHWAY)		
GROUP 1	$ 104.53	29.50
GROUP 2	$ 86.33	29.50
GROUP 3	$ 89.09	29.50
GROUP 4	$ 86.96	29.50
GROUP 5	$ 85.25	29.50
GROUP 6	$ 81.88	29.50
GROUP 7	$ 83.41	29.50
GROUP 8	$ 81.02	29.50
GROUP 9	$ 79.32	29.50
GROUP 10	$ 75.85	29.50

GROUP 11.....$ 70.91 29.50
GROUP 12.....$ 72.47 29.50
GROUP 13.....$ 73.01 29.50
GROUP 14.....$ 55.20 29.50
GROUP 15.....$ 51.35 29.50
POWER EQUIPMENT OPERATOR
(PAVEMENT-HEAVY & HIGHWAY)
Asphalt Plants.....$ 66.86 29.50
Asphalt roller.....$ 78.95 29.50
Asphalt spreader.....$ 81.02 29.50
POWER EQUIPMENT OPERATOR
(STEEL ERECTION)
Compressors, Welding
Machines.....$ 45.34 31.15
Cranes, Hydraulic Cranes,
2 drum derricks,
Forklifts, Boom Trucks.....$ 76.43 31.15
Three drum derricks.....$ 79.54 31.15
POWER EQUIPMENT OPERATOR
(UTILITY)
Horizontal Boring Rig.....$ 77.09 29.50
Off shift compressors.....$ 64.15 29.50
Utility Compressors.....$ 51.02 29.50

POWER EQUIPMENT OPERATOR CLASSIFICATIONS

GROUP 1: Tower crane

GROUP 2: Rubber Tire Backhoes over 37,000 lbs, Track Backhoes, power shovel, Hydraulic clam shells, moles and machines of a similar type

GROUP 3: Mine hoists and crane, etc. used as mine hoists

GROUP 4: Gradalls, keystones, cranes (with digging buckets), bridge cranes, trenching machines, vermeer cutter and machines of a similar nature

GROUP 5: Piledrivers, derrick boats, tunnel shovels

GROUP 6: All drills, and machines of a similar nature

GROUP 7: Back filling machines, cranes, mucking machines, dual drum pavers

GROUP 8: Mixers (concrete w/loading attachments), concrete pavers, cableways, land derricks, power house (low pressure units), concrete pumps

GROUP 9: Concrete plants, well drilling machines, stone crushers double drum hoist, power house (other than above)

GROUP 10: Concrete mixers

GROUP 11: Elevators

GROUP 12: Concrete breaking machine, Hoists (single drum), load masters, locomotive and dinkies over 10 tons

GROUP 13: Vibratory console

GROUP 14: Compressors (portable 3 or more in battery), tugger machine (caissons), well point pumps, chum drill

GROUP 15: Boilers, (high pressure, compressors (portable,

single, or 2 in battery, not over 100' apart), pumps (river cofferdam and welding machines (except where arc is operated by members of local 15) push button machines, all engines irrespective of power (power pac) used to drive auxilliary equipment, air, hydraulic etc.

PREMIUMS ON CRANES (Crawler or Truck):
100' to 149' boom - add .50
150' to 249' boom - add .75
250' to 349' boom - add 1.00
350' to 450' boom - add 1.50

Premiums for Cranes on Steel Erection:
100' to 149' boom - add 1.75
150' to 249' boom - add 2.00
250' to 349' boom - add 2.25
350' to 450' boom - add 2.75
Tower crane - add 2.00

FOOTNOTE:
a. Paid Holidays: New Year's Day; Lincoln's Birthday; Washington's Birthday; Memorial Day; Independence Day; Labor Day; Veterans Day; Columbus Day; Election Day; Thanksgiving Day; and Christmas Day; provided the employee works one day the payroll week in which the holiday occurs.

ENGI0014-002 11/01/2020

	Rates	Fringes
Power Equipment Operator		
BUILDING & RESIDENTIAL		
GROUP 1	$ 81.39	29.50
GROUP 2	$ 86.19	29.50
GROUP 3	$ 75.29	29.50
GROUP 4	$ 68.45	29.50
GROUP 5	$ 51.15	29.50

POWER EQUIPMENT OPERATORS CLASSIFICATIONS

GROUP 1: Double drum

GROUP 2: Stone derrick, cranes, hydraulic cranes, boom trucks

GROUP 3: 4 pole Hoist, Single Drum Hoists

GROUP 4: Fork lift, house cars, plaster (platform machine), plaster bucket, concrete pump and all other equipment used for hoisting material

GROUP 5: Compressors, welding machines (cutting concrete work), paint spraying, sand blasting, pumps (with the exclusion of concrete pumps), house car (settlement basis only), all engines irrespective of power (power pac) used to drive auxiliary equipment, air, hydraulic, etc., boilers

Premiums for Cranes:
100'-149' boom - add 1.75
150'-249' boom - add 2.00
250'-349' boom - add 2.25
350'-450' boom - add 2.75
Tower cranes add 2.00

FOOTNOTE:
a. PAID HOLIDAYS: New Year's Day, Lincoln's Birthday, Memorial Day, Independence Day, Labor Day, Veteran's Day, Columbus Day, Election Day, Thanksgiving Day, and Christmas Day, provided the employee works one day in the payroll week in which the holiday occurs

---

ENGI0015-001 07/01/2021

	Rates	Fringes
POWER EQUIPMENT OPERATOR		
HEAVY AND HIGHWAY		
GROUP 1	$ 74.65	38.00
GROUP 2	$ 72.40	38.00
GROUP 3	$ 68.62	38.00
GROUP 4	$ 64.82	38.00
GROUP 5	$ 44.45	38.00

POWER EQUIPMENT OPERATORS CLASSIFICATIONS

GROUP 1: Cherrypickers 20 tons and over and loaders (rubber-tired and/or tractor type with a manufacturer's rated capacity of six cubic yards and over

GROUP 2: Rubber Tire Backhoes up to and including 37,000 lbs, Basin Machines, Groover, Mechanical Sweepers, Bobcat, Boom Truck, Barrier Transport (Barrier Mover) and machines of a similar nature, Boat Captains, Boat Operators, operation of Churn Drills and machines of a similar nature, Stetco Silent Hoist and machines of a similar nature, Vac-alls, Meyers Machines, John Beam and machines of a similar nature, Ross Carriers and Travel Lifts and machines of a similar nature, Bulldozers, Scrapers, and Turn-a Pulls, Tugger Hoist (used exclusively for handling excavated material), Tractors with attachments, Hyster and Roustabout Cranes, Cherrypickers, Austin Western, Grove and machines of a similar nature, Scoopmobiles, Monorails, Conveyors, Trenchers, Loaders- Rubber-tired and Tractor, Barber Greene, Eimco Loaders and Eimco Backhoes, Mighty Midget and similar breakers and tampers, Curb and Gutter Pavers and Motor Patrol, Motor Graders and all machines of a similar nature, Locomotives ten (10) tons or under, Mini-Max, Break-Tech and machines of a similar nature, Milling Machines, robotic and demolition machines and machines of a similar nature including Bobcat, Pile Rig Rubber-tired Excavator (37,000 lbs. and under), 2 man auger
GROUP 3: Minor Equipment such as Tractors, Post Hole Diggers and Drivers, Ditch Witch (Walk Behind), Road Finishing Machines, Rollers (five (5) tons and under), Tugger Hoists, Dual Purpose Trucks, Fork Lifts and Dempsey Dumpsters

GROUP 4: Oilers for the following equipment: (all gasoline, electric, diesel, or air operated) gradalls and concrete pumps or similarly equipment manned by two-men

GROUP 5: Oilers for the following equipment: (all gasoline, electric, diesel, or air operated) shovels, cranes (draglines), backhoes, pavers, trenching machines, gunite machines, compressors (3 or more in battery)

Premiums for Cranes:
100'-149' boom - add 1.75
150'-249' boom - add 2.00

250'-349' boom - add 2.25
350'-450' boom - add 2.75
Tower cranes add 2.00

FOOTNOTE:
a. PAID HOLIDAYS: New Year's Day, Lincoln's Birthday, Memorial Day, Independence Day, Labor Day, Veteran's Day, Columbus Day, Election Day, Thanksgiving Day, and Christmas Day, provided the employee works one day in the payroll week in which the holiday occurs

---

ENGI0015-002 07/01/2016

	Rates	Fringes
POWER EQUIPMENT OPERATOR		
BUILDING		
GROUP 1	$ 65.94	32.95
GROUP 2	$ 63.98	32.95
GROUP 3	$ 57.42	32.95

POWER EQUIPMENT OPERATORS CLASSIFICATIONS
GROUP 1: Oiler
GROUP 2: Oilers on Crawler Cranes, Backhoes, Trenching machines, Gunite machines, Compressors (3 or more in Battery)
GROUP 3: Gradalls: Concrete Pumps, Power Houses - All equipment in same is manned by two (2) men only, Driving Truck Cranes
FOOTNOTE:
a. PAID HOLIDAYS: New Year's Day, Lincoln's Birthday, Memorial Day, Independence Day, Labor Day, Veteran's Day, Columbus Day, Election Day, Thanksgiving Day, and Christmas Day, provided the employee works one day in the payroll week in which the holiday occurs

---

IRON0040-002 07/01/2020

BRONX, NEW YORK, RICHMOND

	Rates	Fringes
IRONWORKER, STRUCTURAL	$ 52.70	80.24

IRON0046-003 07/01/2019

	Rates	Fringes
IRONWORKER		
METALLIC LATHERS AND REINFORCING IRONWORKERS	$ 44.65	46.67

IRON0197-001 07/01/2020

	Rates	Fringes
IRONWORKER		
STONE DERRICKMAN	$ 53.13	54.60

IRON0361-002 07/01/2020

KINGS, QUEENS

```
                                    Rates          Fringes

 Ironworkers:
      (STRUCTURAL)...............$ 52.70            80.24
 ----------------------------------------------------------------
  IRON0580-001 07/01/2020

                                    Rates          Fringes

 IRONWORKER, ORNAMENTAL...........$ 45.65            57.62
 ----------------------------------------------------------------
  LABO0006-001 07/01/2016

                                    Rates          Fringes

 LABORER (Cement and Concrete
 Workers).......................$ 42.48            17.35
 ----------------------------------------------------------------
  LABO0029-001 07/01/2017

                                    Rates          Fringes

 Laborers:
      Heavy
       Blasters (hydraulic trac
       drill)....................$ 47.15            35.49
       Blasters..................$ 46.27            35.49
       Hydraulic Trac Drill.......$ 41.29            35.49
       Jackhammers, Chippers,
       Spaders, Concrete
       Breakers, All Other
       Pneumatic Tools, Walk
       Behind Self-Propelled
       Hydraulic Asphalt and
       Concrete Breaker...........$ 39.34            35.49
       Powder Carriers............$ 35.17            35.49
 ----------------------------------------------------------------
  LABO0078-001 09/01/2021

                                    Rates          Fringes

 LABORERS
      BUILDING CONSTRUCTION
       ASBESTOS (Removal,
       Abatement, Encapsulation
       or Decontamination of
       asbestos); LEAD; &
       HAZARDOUS WASTE LABORERS
       (Hazardous Waste,
       Hazardous Materials,
       Biochemical and Mold
       Remediation, HVAC, Duct
       Cleaning, Re-spray
       Fireproofing, etc).........$ 38.05            19.35
 ----------------------------------------------------------------
  LABO0079-001 07/01/2018

                                    Rates          Fringes

 LABORER (Building
 Construction)
      Demolition Laborers
      (Interior)
       Tier A....................$ 37.44            23.60
       Tier B....................$ 26.63            17.57
```

```
     Mason Tender/General
     Laborer....................$ 40.65            28.85

CLASSIFICATIONS

  TIER A: Responsible for the removal of all interior petitions
  and structural petitions that can consist of sheet rock,
  block or masonry. Also, all structural slab openings for
  ducts, mechanical, shafts, elevators, slab openings and
  exterior walls where the building is not being completely
  demolitioned.

  TIER B: Responsible for shoveling of debris into containers,
  pushing containers from the inside to the outside of the
  building.

----------------------------------------------------------------
 LABO0147-001 07/01/2016

                                   Rates          Fringes

LABORERS (FREE AIR & TUNNEL).....$ 72.67            47.72

  Maintenance Men, Inside Muck Lock Tenders, Pump Men,
  Electricians, Cement Finishers, Caulkers, Hydraulic Men,
  Shield Men, Monorail Operators, Motor Men, Conveyor Men,
  Powder Carriers, Pan Men, Riggers, Chuck Tenders, Track Men
  Painters, Nippers, Brakemen, Cable Men, Hose Men, Grout
  Men, Gravel Men, Form Workers, Concrete Workers, Tunnel
  Laborers, Mole Nipper (one (1) Mole Sipper per Working
  Shaft per Shift for up to and including Two (2) Moles

----------------------------------------------------------------
 LABO0731-001 07/01/2021

                                   Rates          Fringes

LABORER
     Building, Heavy and
     Residential Construction
      LABORER: (Asbestos, Lead,
      Hazardous Waste Removal
      (including
      soil)/CEMENT/CONCRETE......$ 43.50            48.48
      UTILITY LABORER............$ 43.35            48.48

Paid Holidays: Labor Day and Thanksgiving Day
----------------------------------------------------------------
 LABO1010-001 07/01/2019

                                   Rates          Fringes

Laborers:
     HIGHWAY CONSTRUCTION
      Fence Installer & Repairer.$ 42.98            43.91
      FORMSETTERS................$ 46.85            43.91
      LABORERS...................$ 42.98            43.91
      Landscape Planting &
      Maintenance................$ 42.98            43.91
      Maintenance Safety Surface.$ 42.98            43.91
      Slurry/Sealcoater/Play
      Equipment Installer........$ 42.98            43.91
      Small Equipment Operator
      (Not Operating Engineer)...$ 42.98            43.91
      Small Power Tools Operator.$ 42.98            43.91
```

FOOTNOTES:

a. PAID HOLIDAYS: Memorial Day, Fourth of July, Labor Day, Columbus Day, Election Day and Thanksgiving Day, provided the employee has worked one (1) day in the calendar week in which the said holiday occurs.

LABO1010-002 07/01/2019

	Rates	Fringes
Laborers-Asphalt Construction:		
Micro Paver	$ 47.45	43.91
Raker	$ 46.85	43.91
Screedperson	$ 47.45	43.91
Shoveler (Production Paving Only)	$ 42.98	43.91
Small Equipment Operator (Asphalt)	$ 42.98	43.91

PAIN0009-001 05/01/2020

	Rates	Fringes
GLAZIER	$ 46.55	44.77
PAINTER		
Painters, Drywall Finishers, Lead Abatement Worker	$ 45.70	27.67
Spray, Scaffold and Sandblasting	$ 48.70	27.67

---

* PAIN0806-001 10/01/2021

	Rates	Fringes
Painters:		
Structural Steel and Bridge	$ 53.00	51.23

PAIN1974-001 09/28/2020

	Rates	Fringes
Painters:		
Drywall Tapers/Pointers	$ 48.47	27.91

PLAS0262-001 08/01/2019

	Rates	Fringes
PLASTERER	$ 45.73	30.37

PLAS0262-002 08/01/2019

KINGS AND QUEENS COUNTIES

	Rates	Fringes
PLASTERER	$ 45.73	30.37

PLAS0780-001 07/01/2018

	Rates	Fringes

```
CEMENT MASON/CONCRETE FINISHER...$ 51.97           33.56
-----------------------------------------------------------------
 PLUM0001-001 07/01/2021

                                  Rates          Fringes

PLUMBER
     MECHANICAL EQUIPMENT AND
     SERVICE
      Any repair and/or
      replacement of the
      present plumbing system
      that does not change the
      existing roughing.........$ 45.25           19.06
     PLUMBERS:.................$ 71.25           39.95
-----------------------------------------------------------------
 PLUM0638-001 07/01/2020

                                  Rates          Fringes

PLUMBER
     SERVICE FITTERS...........$ 41.75           14.00
     SPRINKLER FITTERS,
     STEAMFITTERS..............$ 59.05           58.34

  Service Fitter work shall consist of all repair, service and
  maintenance work on domestic, commercial and industrial
  refrigeration, air conditioning and air cooling, stoker and
  oil burner apparatus and heating apparatus etc., including
  but not exclusively the charging, evacuation, leak testing
  and assembling for all machines for domestic, commercial
  and industrial refrigeration, air conditioning and heating
  apparatus. Also, work shall include adjusting, including
  capacity adjustments, checking and repairing or replacement
  of all controls and start up of all machines and repairing
  all defects that may develop on any system for domestic,
  commercial and industrial refrigeration and all air
  conditioning, air cooling, stoker and oil burner apparatus
  and heating apparatus regardless of size or type.

-----------------------------------------------------------------
 ROOF0008-003 07/01/2020

                                  Rates          Fringes

ROOFER........................$ 44.25           34.87
-----------------------------------------------------------------
 SHEE0028-002 07/31/2014

                                  Rates          Fringes

SHEET METAL WORKER
     BUILDING CONSTRUCTION.......$ 50.91           36.70
     RESIDENTIAL CONSTRUCTION....$ 27.22           16.48
-----------------------------------------------------------------
 TEAM0282-001 07/01/2020

                                  Rates          Fringes

TRUCK DRIVER
     Asphalt...................$ 42.68        46.9025+a
     Euclids & Turnapulls........$ 45.62        50.5625+a
     High Rise.................$ 53.79        49.2025+a
```

FOOTNOTES:

PAID HOLIDAYS: New Year's Day, Presidents' Day, Memorial Day, Independence Day, Labor Day, Columbus Day, Election Day, Veterans' Day (Armistice Day), Thanksgiving Day, Day after Thanksgiving and Christmas Day. Employees working two (2) days in the calendar week in which a holiday falls are to be paid for such holiday, provided that they shape each remaining workday during such calendar week.

WELDERS - Receive rate prescribed for craft performing operation to which welding is incidental.

==========

Note: Executive Order (EO) 13706, Establishing Paid Sick Leave for Federal Contractors applies to all contracts subject to the Davis-Bacon Act for which the contract is awarded (and any solicitation was issued) on or after January 1, 2017. If this contract is covered by the EO, the contractor must provide employees with 1 hour of paid sick leave for every 30 hours they work, up to 56 hours of paid sick leave each year. Employees must be permitted to use paid sick leave for their own illness, injury or other health-related needs, including preventive care; to assist a family member (or person who is like family to the employee) who is ill, injured, or has other health-related needs, including preventive care; or for reasons resulting from, or to assist a family member (or person who is like family to the employee) who is a victim of, domestic violence, sexual assault, or stalking. Additional information on contractor requirements and worker protections under the EO is available at www.dol.gov/whd/govcontracts.

Unlisted classifications needed for work not included within the scope of the classifications listed may be added after award only as provided in the labor standards contract clauses (29CFR 5.5 (a) (1) (ii)).

The body of each wage determination lists the classification and wage rates that have been found to be prevailing for the cited type(s) of construction in the area covered by the wage determination. The classifications are listed in alphabetical order of ""identifiers"" that indicate whether the particular rate is a union rate (current union negotiated rate for local), a survey rate (weighted average rate) or a union average rate (weighted union average rate).

Union Rate Identifiers

A four letter classification abbreviation identifier enclosed in dotted lines beginning with characters other than ""SU"" or ""UAVG"" denotes that the union classification and rate were prevailing for that classification in the survey. Example: PLUM0198-005 07/01/2014. PLUM is an abbreviation identifier of the union which prevailed in the survey for this classification, which in this example would be Plumbers. 0198 indicates the local union number or district council number where applicable, i.e., Plumbers Local 0198. The next number, 005 in the example, is an internal number used in processing

the wage determination. 07/01/2014 is the effective date of the most current negotiated rate, which in this example is July 1, 2014.

Union prevailing wage rates are updated to reflect all rate changes in the collective bargaining agreement (CBA) governing this classification and rate.

Survey Rate Identifiers

Classifications listed under the ""SU"" identifier indicate that no one rate prevailed for this classification in the survey and the published rate is derived by computing a weighted average rate based on all the rates reported in the survey for that classification. As this weighted average rate includes all rates reported in the survey, it may include both union and non-union rates. Example: SULA2012-007 5/13/2014. SU indicates the rates are survey rates based on a weighted average calculation of rates and are not majority rates. LA indicates the State of Louisiana. 2012 is the year of survey on which these classifications and rates are based. The next number, 007 in the example, is an internal number used in producing the wage determination. 5/13/2014 indicates the survey completion date for the classifications and rates under that identifier.

Survey wage rates are not updated and remain in effect until a new survey is conducted.

Union Average Rate Identifiers

Classification(s) listed under the UAVG identifier indicate that no single majority rate prevailed for those classifications; however, 100% of the data reported for the classifications was union data. EXAMPLE: UAVG-OH-0010 08/29/2014. UAVG indicates that the rate is a weighted union average rate. OH indicates the state. The next number, 0010 in the example, is an internal number used in producing the wage determination. 08/29/2014 indicates the survey completion date for the classifications and rates under that identifier.

A UAVG rate will be updated once a year, usually in January of each year, to reflect a weighted average of the current negotiated/CBA rate of the union locals from which the rate is based.

WAGE DETERMINATION APPEALS PROCESS

1.) Has there been an initial decision in the matter? This can be:

* an existing published wage determination
* a survey underlying a wage determination
* a Wage and Hour Division letter setting forth a position on a wage determination matter
* a conformance (additional classification and rate) ruling

On survey related matters, initial contact, including requests for summaries of surveys, should be with the Wage and Hour Regional Office for the area in which the survey was conducted because those Regional Offices have responsibility for the Davis-Bacon survey program. If the response from this initial

contact is not satisfactory, then the process described in 2.) and 3.) should be followed.

With regard to any other matter not yet ripe for the formal process described here, initial contact should be with the Branch of Construction Wage Determinations. Write to:

Branch of Construction Wage Determinations
Wage and Hour Division
U.S. Department of Labor
200 Constitution Avenue, N.W.
Washington, DC 20210

2.) If the answer to the question in 1.) is yes, then an interested party (those affected by the action) can request review and reconsideration from the Wage and Hour Administrator (See 29 CFR Part 1.8 and 29 CFR Part 7). Write to:

Wage and Hour Administrator
U.S. Department of Labor
200 Constitution Avenue, N.W.
Washington, DC 20210

The request should be accompanied by a full statement of the interested party's position and by any information (wage payment data, project description, area practice material, etc.) that the requestor considers relevant to the issue.

3.) If the decision of the Administrator is not favorable, an interested party may appeal directly to the Administrative Review Board (formerly the Wage Appeals Board). Write to:

Administrative Review Board
U.S. Department of Labor
200 Constitution Avenue, N.W.
Washington, DC 20210

4.) All decisions by the Administrative Review Board are final.

==========

END OF GENERAL DECISION"

(NO TEXT ON THIS PAGE)

CITY OF NEW YORK
DEPARTMENT OF DESIGN AND CONSTRUCTION
DIVISION OF INFRASTRUCTURE

ADDENDA CONTROL SHEET

BID SUBMISSION DATE/ TIME: December 7, 2021; between 8:30 AM and 11:00 AM
BID OPENING DATE/ TIME: December 7, 2021; 11:30 AM

PROJECT No. : SANDRESPC

TITLE: EAST SIDE COASTAL RESILENCY FROM MONTGOMERY STREET TO EAST 25TH STREET

ADDENDA ISSUED	NO. OF DWG	DATE	APPROVED BY: SPECS UNIT	APPROVED BY: GENERAL COUNSEL
# 1 Questions from Bidders and Responses to Questions; Revisions to PASSPort Forms; Revisions to Documents		11/18/2021		Candace Chung

THE CITY OF NEW YORK
DEPARTMENT OF DESIGN AND CONSTRUCTION
DIVISION OF INFRASTRUCTURE

11/18/2021

ADDENDUM No. # 1

FOR FURNISHING ALL LABOR AND MATERIAL NECESSARY AND REQUIRED FOR:

85021B0117 – SANDRESPC

EAST SIDE COASTAL RESILENCY FROM MONTGOMERY STREET TO EAST 25TH STREET

This addendum is issued for the purpose of amending the requirements of the Bid and Contract Documents and is hereby made a part of said Bid and Contract Documents to the same extent as though it were originally included therein.

The bidder is advised that the items listed below apply to the project:

1. Bidders Questions and Responses to Questions:
See Attachment A.

3. Revisions to PASSPort forms:
See Attachment B

4. Revisions to Documents:
See Attachment C.

Transferring Data Between Rounds of an RFX: A new document titled "Transferring Data Between Rounds of an RFX" has been added to the Documents section of the View RFx tab. Please refer to this document when an addendum has been issued. Note: Whenever an addendum is issued, the RFX item grid will be cleared. You can import the work you have already done by following the steps on this document.

DDC strongly advises vendors to finalize and submit bids 48 hours prior to due date and time. The City is not responsible for technical issues (e.g. internet connection, power outages, technology malfunction, computer errors, etc.) related to bid submissions.

If additional information is required, please contact the Department of Design and Construction, Contract Section at (718) 391-1041 or by email at CSB_projectinquiries@ddc.nyc.gov.

Richard Jones, PE CWI CDT
Executive Director, Specifications

DDC PROJECT #: **SANDRESPC**

PROJECT NAME: **EAST SIDE COASTAL RESILENCY FROM MONTGOMERY STREET TO EAST 25TH STREET**
ATTACHMENT A - BIDDERS QUESTIONS AND DDC RESPONSES

No.	Bidders Questions	DDC Responses
1	Please find attached pre-bid RFI #1 regarding the SANDRESPC project. The purpose of this RFI is to respectfully request a time extension from the current bid date of December 7, 2021.	A bid extension will be provided in an upcoming addendum.
2	We are requesting a Planholder's List for this project that is to be bid on 12-7-21	See Attachment B of this Addendum.
3	I am unable to acknowledge or download project documents for the above named.	Please contact help@mocs.nyc.gov.

DDC PROJECT #: **SANDRESPC**

PROJECT NAME: **EAST SIDE COASTAL RESILENCY FROM MONTGOMERY STREET TO EAST 25TH STREET**

ATTACHMENT B – REVISIONS TO THE DOCUMENTS

Planholder's List, Pre Bid Conference Presentation, and Pre Bid Conference Sign-in Sheet added to documents.

Department of Design and Construction

EAST SIDE COASTAL RESILIENCY

SANDRESPC: PRE-BID MEETING

NOVEMBER 17, 2021

AGENDA

- INTRODUCTION/ PASSPort Bid Information (Richard Jones - DDC)
- PROJECT OVERVIEW (Thu-Loan Dinh – DDC & Zach Dillon– HNTB-LiRo)
  - INTERCEPTOR GATE AND GATE HOUSE
  - AVENUE C DETOUR
- GENERAL CONTRACT INFORMATION
- CON EDISON JOINT BID
- COORDINATION WITH OTHER PROJECTS
- QUESTIONS

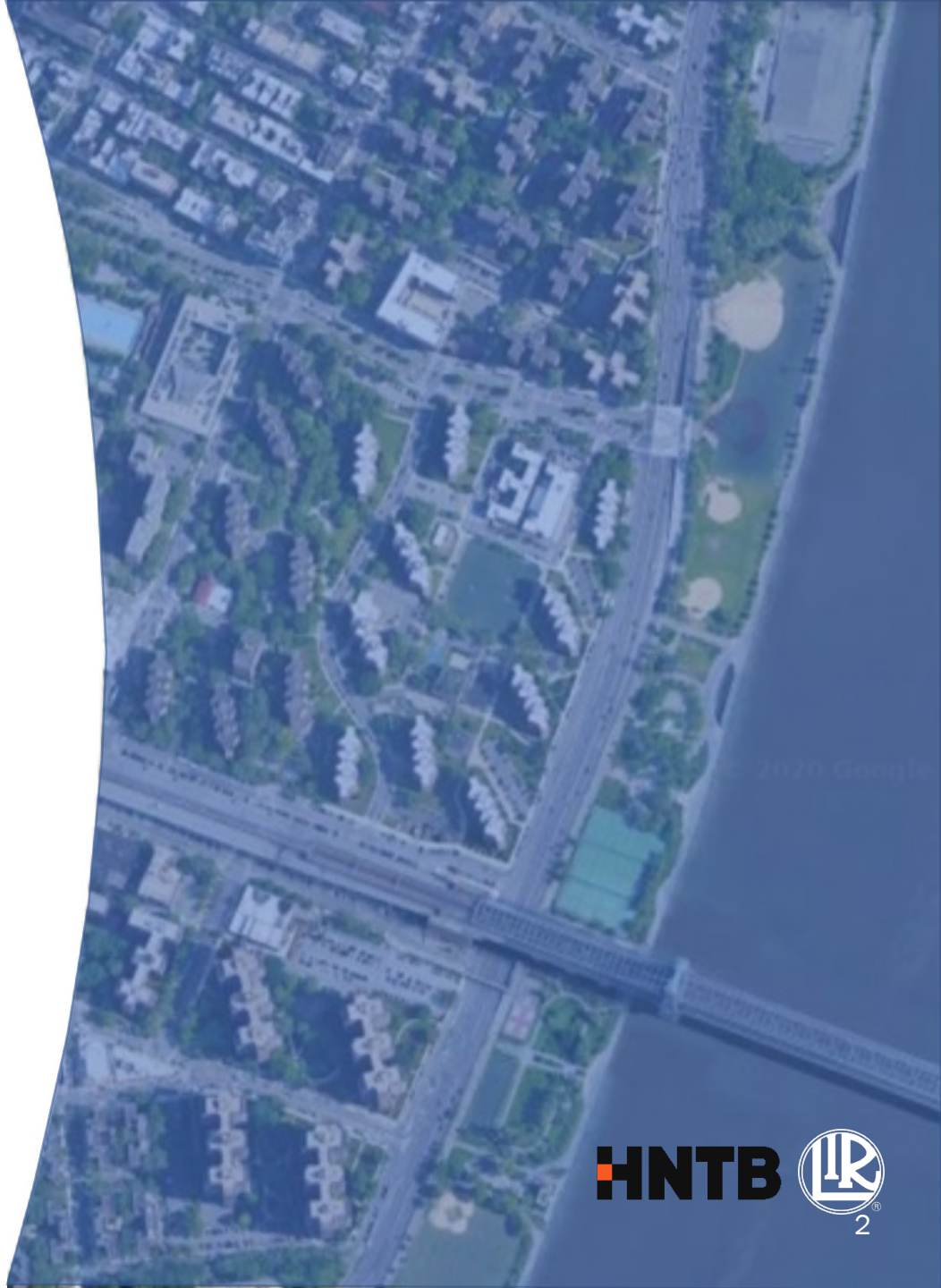

INTRODUCTION

PASSPort

Department of Design and Construction

Pre-Bid Conference information: Projects bidding in PASSPort

1. Where do vendors find the advertisement documents?

For non-PQL projects:

- Go here: https://passport.cityofnewyork.us/page.aspx/en/rfp/request_browse_public
  - Filter Industry: "Construction"
  - Filter RFx status: "Released", "Planned", and/or "Responses Received".
  - If necessary, filter Agency: "Department of Design and Construction"
- Click on the link for the Procurement Name you are interested in.

For PQL projects: Documents will not be posted on the public portal, but will be available to the PQL once logged in to PASSPort.

In all cases, the documents will no longer be on the DDC Bid Documents Online website.

2. What is an RFx?

"Request for Anything". Basically a procurement or solicitation.

3. What happened to the Bid Booklet?

The Volume 1 bid booklet previously consisted of two types of materials:

1. Information for the bidder
2. Forms for use during the bid.

The material has been restructured as follows:

- Volume 1 Bid Booklet: All information for the bidder. This is not project specific.
- PASSPort Questionnaire: Forms for use during the bid.
- PASSPort Item Grids: Where bid prices are entered.
- PASSPort Subcontractor and Joint Venture: where subcontractors are entered. The subcontractor information is used to determine compliance with the M/WBE goals.

4. How do vendors get help with PASSPort?

- Manuals: https://www1.nyc.gov/site/mocs/systems/passport-user-materials.page
  - Highlight: Finding and Responding to RFx for Vendors PDF
- Email help@mocs.nyc.gov
- MOCS Website: https://www1.nyc.gov/site/mocs/systems/contact-passport.page

5. How do vendors submit Pre Bid Questions?

All PBQ's must be sent to CSB_ProjectInquiries@ddc.nyc.gov per current procedure.

The PASSPort Discussion feature is not being used.

6. But the MOCS Helpdesk told me to send a message in the PASSPort Discussion, what do we do?

Don't use the PASSPort Discussion feature, email CSB_ProjectInquiries@ddc.nyc.gov.

Rev 9/20/2021 1/3

PASSPort

Department of Design and Construction

Pre-Bid Conference information: Projects bidding in PASSPort

7. WHAT HAPPENED TO M/WBE SCHEDULE B?

M/WBE participation is entered using the Subcontractor and Joint Venture tab in PASSPort. Please refer to the file "Schedule B – WMBE Utilization + Waiver Instructions" in the RFx Documents.

8. HOW DO VENDORS SUBMIT A M/WBE WAIVER REQUEST?

Vendors must follow the instructions in the Volume 1 Bid Booklet, section M/WBE Notice to Prospective Contractors and the Schedule B – MWBE Utilization + Waiver Instructions.

9. WHAT DO VENDORS ACTUALLY SUBMIT TO DDC ON THE BID DAY?

- You must submit by hand to DDC before the bid due date:
  - The Bid Submission form, found in the PASSPort Questionnaire
  - If applicable, the certified check for bid security.

  No other paper submissions will be accepted.

The price on the Bid Submission form must be the total bid price – including all allowances and item grids.

PAPER BID SUBMISSIONS WILL BE DEEMED NON-RESPONSIVE. YOU MUST SUBMIT YOUR BID ELECTRONICALLY IN PASSPORT AND DELIVER TO DDC THE SIGNED BID SUBMISSION FORM (AND CERTIFIED CHECK, IF APPLICABLE) FOR THE BID TO BE CONSIDERED RESPONSIVE.

10. WHAT CHANGED IN THE ADDENDUM FORMAT?

We have updated the addendum format to standardize between Public Buildings and Infrastructure, and to better accentuate where the changes are. The addendum will have up to three Attachments:

A. Bidder Questions and Responses to Questions
B. Revisions to PASSPort Forms. This includes:
   a. Date changes
   b. M/WBE goal changes
   c. Questionnaire changes
   d. Item grid changes (includes Infrastructure Bid Schedule changes)
C. Revisions to Documents.

NOT ALL ADDENDUMS INCLUDE ALL THREE ATTACHMENTS.

11. WHAT IS AN ADDENDUM ROUND?

- Addendum rounds are separate from addendums.
- Addendum rounds allow for changing:
  - Change bid due date and bid opening date
  - Questionnaire
  - Item Grids (including Infrastructure Bid Schedule)

PASSPort

Department of Design and Construction

Pre-Bid Conference information: Projects bidding in PASSPort

- Removing or revising documents
- Changing or adding pre-bid conferences

- The following can be changed via addendum without an addendum round:
  - Change M/WBE goals
  - Add documents

12. THE DATES IN PASSPORT DON'T MATCH DATES FROM SOME OTHER SOURCE. WHAT DO WE DO?

The dates in PASSPort are what govern and should be used. If you suspect an error or believe there is insufficient time to prepare your bid, please submit a pre-bid question to CSB_ProjectInquiries@ddc.nyc.gov.

13. HOW DO WE GET A PLANHOLDER LIST?

Planholder lists are no longer automatically generated with PASSPort. If you would like a planholder list, please submit a Pre-Bid Question to CSB_ProjectInquiries@ddc.nyc.gov and one will be provided via addendum.

14. HOW DO VENDORS GET NOTIFIED OF PROJECTS BEING ADVERTISED?

- Set your PASSPort profile to sign up for the right commodity codes, and enroll to those codes.
- Currently DDC is using the following commodity codes:
  - Public Buildings:
    - 110 GC
    - 105 Electrical
    - 111 HVAC
    - 116 Plumbing
    - 117 Roofing
  - Infrastructure:
    - 131 Bridge
    - 135 Parks
    - 137 Roadwork
    - 141 Utilities
- Projects will use only one code, but may have work in multiple codes. Examples:
  - An Infrastructure project where the bulk of the work is sewer reconstruction but still has road construction and paving will be entered as code 141.
  - A Public Buildings project being bid as a GC contract but contains electrical and roofing work will be entered as code 110.

HireNYC

HireNYC: Goods and Services – Contractor Overview

Program Overview
HireNYC: Goods and Services is part of the Mayor's larger HireNYC program, announced in *One New York: The Plan for a Strong and Just City* and *Career Pathways: One City Working Together*. It is a partnership between the City, employers and jobseekers to leverage the City's purchasing power to connect low-income and underserved New Yorkers to employment opportunities. HireNYC: Goods and Services is a hiring process that requires businesses that contract with the City to share entry and mid-level positions with the City, and interview the qualified candidates that the City refers. It provides free, high quality recruitment services to employers and high-quality employment services to jobseekers. Contractors will work with the Department of Small Business Services' Workforce1 System (Workforce1), a free employment service, to find qualified candidates to fill openings across their organization.

HireNYC: Goods and Services Requirements
On applicable contracts, all contractors will be required to:

- Enroll with the HireNYC Portal within thirty (30) days after registration of the contract;
- Provide information on all entry to mid-level job opportunities[1] arising from a contract that will be performed in the City;
- Interview qualified candidates sourced from Workforce 1 for those opportunities;
- Provide feedback to Workforce 1 related to referred candidates that were interviewed and employment information related to referred candidates that were hired; and
- If no applicable employment opportunity related to a contract arose, to certify as such.

These requirements were designed to assist contractors with finding employees if openings occur throughout the term of the contract. Though contractors will be required to interview qualified candidates referred by Workforce1, contractors will not be required to hire anyone.

Enroll Contracts through the HireNYC Portal
All contractors must enroll qualifying contracts through the HireNYC Portal to attest to possible hiring needs arising from the contract. Enrollment must be completed within 30 days of the contract registration date. HireNYC: Goods and Services requirements apply to all new contracts with a value of $1 million or more for:

- Goods and services contracts;
- Construction contracts with non-trade position openings; and
- Human services contracts that are not subject to the Public Assistance Hiring Rider

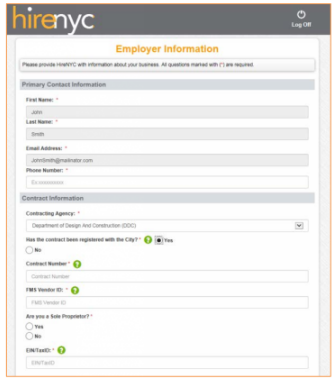

HireNYC Portal Enrollment Screen

[1] Entry to mid-level job opportunities include those requiring no more than an associate degree, as provided by the New York State Department of Labor (see Column F of https://labor.ny.gov/stats/2012-2022-NYS-Employment-Prospects.xls)

Enrollment through the HireNYC Portal includes:

1. Providing the name, phone number and email address for the person who will be the contractor's primary contact with the City for all communications related to HireNYC: Goods and Services;
2. Providing basic information about the contractor, including business name, address, EIN and City Vendor ID Number;
3. Providing the Contract ID Number; and
4. Attesting to whether the contractor intends to hire any entry or mid-level position(s) for work arising from the contract to be performed in the City, and if so providing the approximate start date for the first hire.

If new positions become available during the life of the contract, those hiring requirements must be submitted through the HireNYC Portal. Contractors will be required to re-enroll through the HireNYC Portal every 365 days throughout the life of the contract.

Work with Workforce1 Recruiters to Find Qualified Candidates
If a contractor plans to hire for any entry or mid-level position(s) arising from a qualified contract, position profiles must be created in the HireNYC Portal for each position no less than 3 weeks before the intended date of employment. Once a position profile has been created, a recruiter from Workforce1 will contact the contractor within 3 business days to confirm the details of the position(s), discuss the screening process and recruitment timeline. The Workforce1 recruiter will work with the contractor's primary contact to develop a recruitment plan that aligns with the contractor's specific hiring needs. The contractor's primary contact should be knowledgeable of the contractor's hiring needs and/or have the ability to hire on behalf of the contractor.

After finalizing the recruitment plan with the contractor, Workforce1 will recruit candidates for the open positions and screen qualified candidates based on the contractor's specifications and hiring needs. Workforce1 will notify the contractor about qualified candidates and provide information, such as a resume with contact details, to allow the contractor to review the candidate profiles and schedule interviews. If the contractor does not consider a candidate to be qualified for an interview, they must provide a reason to Workforce1 for why the candidate is being disqualified.

Provide Feedback on Interviews and Hires
The contractor must provide to Workforce1 information about the outcomes of the interviews. For candidates that were hired, this includes the start date as well as wage and hours per week. The contractor will be able to provide this information through the HireNYC Portal.

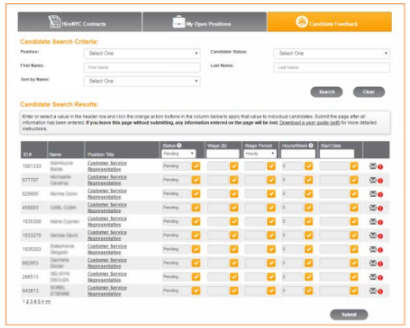

HireNYC Portal Candidate Feedback Screen

For general HireNYC questions, contact HireNYCQuestions@cityhall.nyc.gov

For questions about the HireNYC Portal, contact HireNYCSupport@sbs.nyc.gov.

HireNYC URL: http://www.nyc.gov/hirenyccontracts

PROJECT OVERVIEW

PROJECT OVERVIEW

PROJECT OVERVIEW – INTERCEPTOR GATE

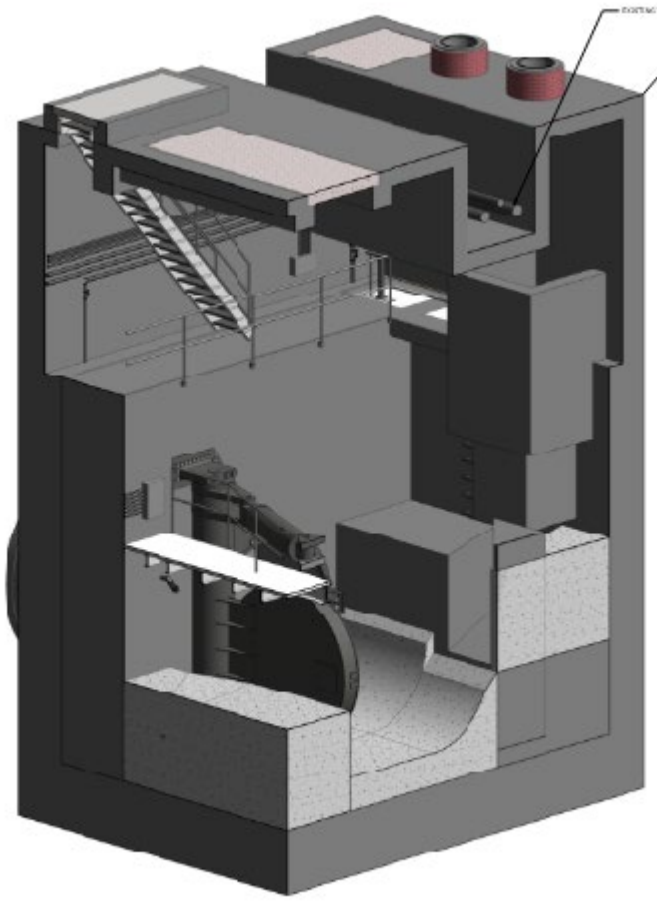

INTERCEPTOR GATE CHAMBER NORTHWEST VIEW

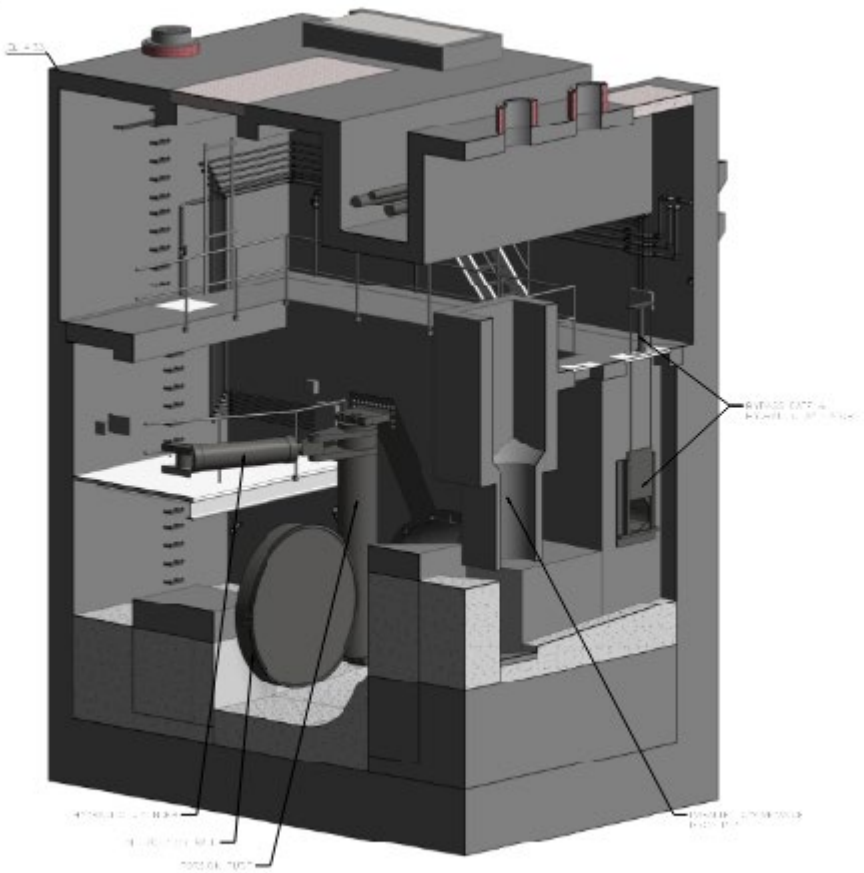

INTERCEPTOR GATE CHAMBER SOUTHWEST VIEW

FOR BID

PROJECT OVERVIEW – AVE C DEP SEWER

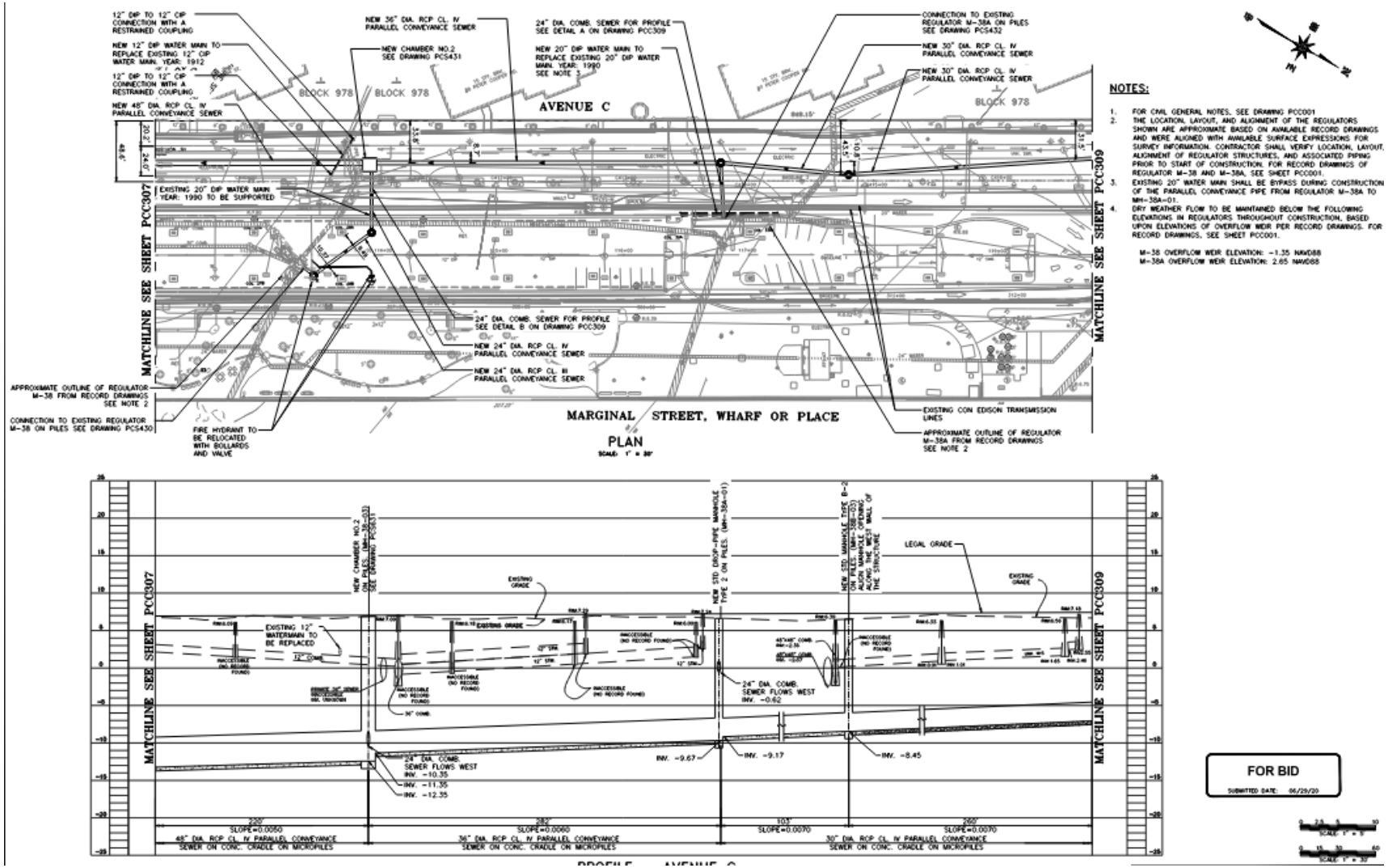

PROJECT OVERVIEW – AVE C DEP SEWER MPT

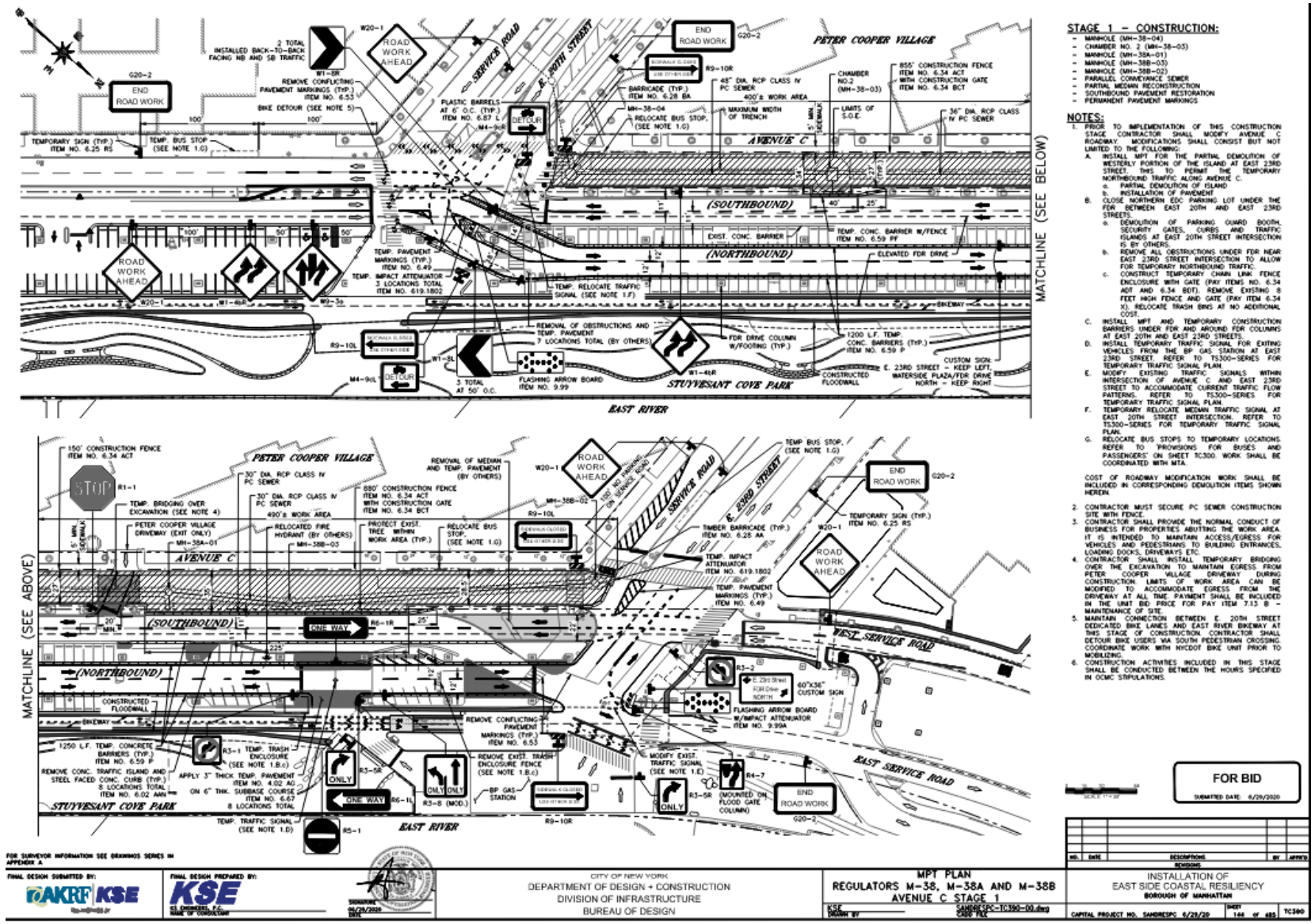

GENERAL CONTRACT INFORMATION

GENERAL CONTRACT INFORMATION

Items of Importance

- Time for Completion
- MBE/WBE Requirement
- Contractor Must Self-Perform a Minimum of 51% of the Work
- Special Notices to Bidders
- Engineer's Field Office
- HUD Funding
- Section 3/HIRE NYC
- Envision (Following Slides)

GENERAL CONTRACT INFORMATION – Increasing Sustainability via ENVISION

ESCR-5 Construction & Demolition Waste

- At least fifteen percent (15%) of the total project materials, supplies, and equipment must meet explicit environmental standards
- At least five percent (5%) of all project materials must include recycled content
- Divert at least fifty percent (50%) of all demolition and general construction waste from landfills

ESCR-6 Conservation of Water & Energy

- Implement two (2) of the listed strategies to reduce construction energy consumption
- Implement one (1) of the listed strategies to reduce construction water consumption

INCENTIVES AND LIQUIDATED DAMAGES

INCENTIVES AND LIQUIDATED DAMAGES

Substantial Completion

- Accelerated Substantial Completion - $30,000 per day, up to 150 CCDs
- Liquidated Damages - $30,000 per day, with unlimited days

CON EDISON JOINT BID

CON EDISON JOINT BID WORK:

- Gas Main Capital Plan Work
- Steam Line Capital Plan Work
- Electric Capital Plan Work

CON ED GAS MAIN CAPITAL PLAN– EXAMPLE

LEGEND:

NEW GAS MAIN TRENCH

EXISTING GAS MAIN

EXISTING GAS TO BE ABANDONED

TEST PIT FOR GAS SERVICES — 6' X 5' X 5'

TIE-IN PIT (SHEETS/ft) — VARYING SIZE

TABLE 4: PROPOSED GAS RELOCATION WORK FOR SHEET 4

SIZE OF MAIN	MATERIAL TYPE	PROPOSED LINEAR FOOTAGE	NO. OF 8-HR CREW SHIFTS REQUIRED
12	STEEL	350.00	11
SUB-TOTALS (LF)		350.00	11
SERVICES (EA)		1	1.5
TOTAL 8-HOUR CREW SHIFTS			12.5

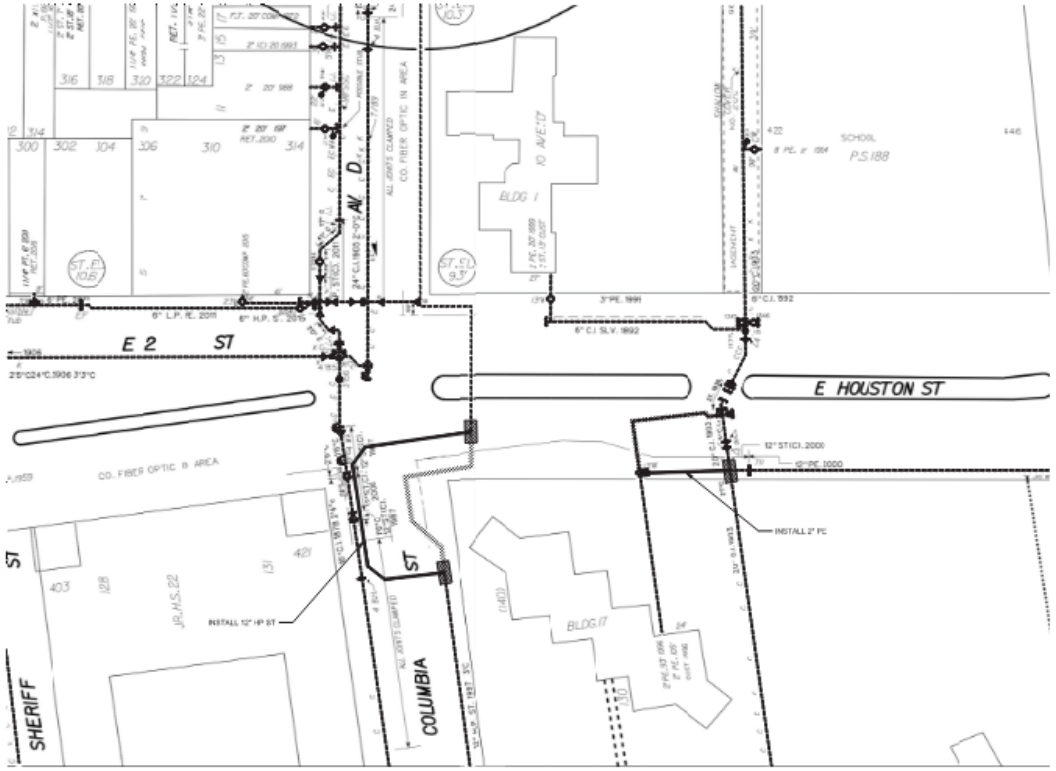

NOTE:
REFERENCE ITEM 6.09 TABLE IN EPT REPORT.

COORDINATION WITH OTHER PROJECTS

COORDINATION WITH OTHER PROJECTS

- SANDRESM1 – Area PA1
- SANDRESM2 – Area PA2
  - Avenue C Parking Lot MPT Scheme

QUESTIONS?

SANDRESPC Pre-Bid Conference Sign-in List

Luis Figueiredo

DiFazio Industries

luisf@difazioind.net

Uday Durg

Judlau Contracting Inc.

Uday.durg@ohla-usa.com

Steve Brisotti,

Welsbach Electric Corp.

sbrisotti@emcor.net

Buket Agdere

Judlau Contracting

buket.agdere@ohla-usa.com

Leo McGugart

New York Concrete Corp

lmcgugart@newyorkconcrete.com

Kevin Martin,

Halmar International, LLC

kmartin@halmarinternational.com

Mohamed Abdel-Al

Lane Construction

mabdelal@laneconstruct.com

SANDRESPC Pre-Bid Conference Sign-in List

Patrick Mullen

CCA Civil

mullen_patrick@ccacivil.us

Wendy Brawer

WendyBrawer.com

wendybrawersite@gmail.com

Andrew Silverman

Infinite Consulting Corp

asilverman@infiniteconsultingcorp.com

Ken Gregg

kgregg@primapaving.com

DDC PROJECT #: **SANDRESPC**

PROJECT NAME: **EAST SIDE COASTAL RESILENCY FROM MONTGOMERY STREET TO EAST 25TH STREET**

ATTACHMENT C – REVISIONS TO PASSPORT FORMS

This Addendum initiates Round 2 of the procurement.

Please note that numbering of addenda is independent of rounds.

Questionnaire Changes:

None

Item Grid Changes:

The following Item Grid Changes have been made:

- Revised quantity:
  - 4.18 A
  - 4.21
  - PK-227B ADA
  - PK-ESCR 0-05
  - PK-ESCR 741
  - PK-ESCR 764 A

CITY OF NEW YORK
DEPARTMENT OF DESIGN AND CONSTRUCTION
DIVISION OF INFRASTRUCTURE

ADDENDA CONTROL SHEET

BID SUBMISSION DATE/ TIME: January 4, 2022; between 8:30 AM and 11:00 AM
BID OPENING DATE/ TIME: January 4, 2022; 11:30 AM

PROJECT No. : SANDRESPC

TITLE: EAST SIDE COASTAL RESILENCY FROM MONTGOMERY STREET TO EAST 25TH STREET

ADDENDA ISSUED	NO. OF DWG	DATE	APPROVED BY: SPECS UNIT	APPROVED BY: GENERAL COUNSEL
# 1 Questions from Bidders and Responses to Questions; Revisions to PASSPort Forms;		11/18/2021		
#2 Revised Bid Opening Date; Questions from Bidders and Responses to Questions; Revisions to Documents; Revisions to PASSPort Forms;		11/26/2021		Candace Chung

THE CITY OF NEW YORK
DEPARTMENT OF DESIGN AND CONSTRUCTION
DIVISION OF INFRASTRUCTURE

11/26/2021

ADDENDUM No. # 2

FOR FURNISHING ALL LABOR AND MATERIAL NECESSARY AND REQUIRED FOR:

85021B0117 – SANDRESPC

EAST SIDE COASTAL RESILENCY FROM MONTGOMERY STREET TO EAST 25TH STREET

This addendum is issued for the purpose of amending the requirements of the Bid and Contract Documents and is hereby made a part of said Bid and Contract Documents to the same extent as though it were originally included therein.

The bidder is advised that the items listed below apply to the project:

1. **The Bid Opening for the contract described below scheduled for December 7, 2021, at 11:30 pm is rescheduled to January 4, 2021 at 11:30 am.**

2 **Bidders Questions and Responses to Questions:**
See Attachment A.

3. **Revisions to Documents**
See Attachment B.

4. **Revisions to PASSPort forms:**
See Attachment C.

Transferring Data Between Rounds of an RFX: A new document titled "Transferring Data Between Rounds of an RFX" has been added to the Documents section of the View RFx tab. Please refer to this document when an addendum has been issued. Note: Whenever an addendum is issued, the RFX item grid will be cleared. You can import the work you have already done by following the steps on this document.

DDC strongly advises vendors to finalize and submit bids 48 hours prior to due date and time. The City is not responsible for technical issues (e.g. internet connection, power outages, technology malfunction, computer errors, etc.) related to bid submissions.

If additional information is required, please contact the Department of Design and Construction, Contract Section at (718) 391-1041 or by email at CSB_projectinquiries@ddc.nyc.gov.

Richard Jones, PE CWI CDT
Executive Director, Specifications

DDC PROJECT #: **SANDRESPC**

PROJECT NAME: **EAST SIDE COASTAL RESILENCY FROM MONTGOMERY STREET TO EAST 25TH STREET**
ATTACHMENT A - BIDDERS QUESTIONS AND DDC RESPONSES

No.	Bidders Questions	DDC Responses
1	Please refer to PCH353, the section A detail does not match what is pointed out on PCH352. Please provide clarification for this	The section cut for SECTION A is shown on "PARTIAL PLAN "D"" on the same drawing PCH353. Note that Section A is not to scale. The intent of the section is the clarify the materials and interrelationship of materials needed to restore the median.
2	Bid Drawing Sheet PCC 304. Is the New Manhole MH-28-01 to be on Piles?	Yes, MH-28-01 shall be on piles per schedule shown on drawing PCS800. Pile spacing shall be per DEP standard sewer drawings.
3	Bid Drawing Sheet PCC 305. Are the New Manholes to be installed on Piles on this Drawing? Please Clarify.	Yes, new manholes are on piles per schedule on drawing PCS300 and spaced per DEP standard sewer drawings.
4	Bid Drawing NHC 303. What is the Class of DI for the Proposed 12" Storm Drain Pipe?	The plan set does not include a drawing "NHC 303."
5	On page 17 of 25 of the Powerpoint Pre-bid Meeting presentation lists $30,000 accelerated substantial completion. I cannot find that in the contract documents, please advise where this statement is in the contract documents.	The presentation was in error. No early completion incentive is provided as part of this project. Liquidated Damages are shown in Schedule A.
6	Item 6.52 FED is missing from the bid items/allowances.	Item 6.52 FED will be added to the Item Grid in an upcoming addendum.

DDC PROJECT #: **SANDRESPC**

PROJECT NAME: **EAST SIDE COASTAL RESILENCY FROM MONTGOMERY STREET TO EAST 25TH STREET**

ATTACHMENT B – REVISIONS TO THE DOCUMENTS

Information For Bidders in Volume 2 has been updated.

DDC PROJECT #: **SANDRESPC**

PROJECT NAME: **EAST SIDE COASTAL RESILENCY FROM MONTGOMERY STREET TO EAST 25TH STREET**

ATTACHMENT C – REVISIONS TO PASSPORT FORMS

This Addendum initiates Round 3 of the procurement.

Please note that numbering of addenda is independent of rounds.

Questionnaire Changes:

None

Item Grid Changes:

None

CITY OF NEW YORK
DEPARTMENT OF DESIGN AND CONSTRUCTION
DIVISION OF INFRASTRUCTURE

ADDENDA CONTROL SHEET

BID SUBMISSION DATE/ TIME: January 18, 2022; between 8:30 AM and 11:00 AM
BID OPENING DATE/ TIME: January 18, 2022; 11:30 AM

PROJECT No. : SANDRESPC

TITLE: EAST SIDE COASTAL RESILENCY FROM MONTGOMERY STREET TO EAST 25TH STREET

ADDENDA ISSUED	NO. OF DWG	DATE	APPROVED BY:	
			SPECS UNIT	GENERAL COUNSEL
# 1 Questions from Bidders and Responses to Questions; Revisions to PASSPort Forms;		11/18/2021		
#2 Revised Bid Opening Date; Questions from Bidders and Responses to Questions; Revisions to Documents; Revisions to PASSPort Forms		11/24/2021		
#3 Revised Bid Opening Date ; Questions from Bidders and Responses to Questions; Revisions to PASSPort Forms; Revisions to Documents	4	12/23/2021		Candace Chung

THE CITY OF NEW YORK
DEPARTMENT OF DESIGN AND CONSTRUCTION
DIVISION OF INFRASTRUCTURE

12/23/2021

ADDENDUM No. # 3

FOR FURNISHING ALL LABOR AND MATERIAL NECESSARY AND REQUIRED FOR:

85021B0117 – SANDRESPC

EAST SIDE COASTAL RESILENCY FROM MONTGOMERY STREET TO EAST 25TH STREET

This addendum is issued for the purpose of amending the requirements of the Bid and Contract Documents and is hereby made a part of said Bid and Contract Documents to the same extent as though it were originally included therein.

The bidder is advised that the items listed below apply to the project:

1. **The Bid Opening for the contract described below scheduled for January 4, 2021 at 11:30 pm is rescheduled to January 18, 2021 at 11:30 am.**

2. **Bidders Questions and Responses to Questions:**
   See Attachment A.

3. **Revisions to Documents:**
   See Attachment B.

4. **Revisions to PASSPort forms:**
   See Attachment C.

Transferring Data Between Rounds of an RFX: A new document titled "Transferring Data Between Rounds of an RFX" has been added to the Documents section of the View RFx tab. Please refer to this document when an addendum has been issued. Note: Whenever an addendum is issued, the RFX item grid will be cleared. You can import the work you have already done by following the steps on this document.

DDC strongly advises vendors to finalize and submit bids 48 hours prior to due date and time. The City is not responsible for technical issues (e.g. internet connection, power outages, technology malfunction, computer errors, etc.) related to bid submissions.

If additional information is required, please contact the Department of Design and Construction, Contract Section at (718) 391-1041 or by email at CSB_projectinquiries@ddc.nyc.gov.

Richard Jones, PE CWI CDT
Executive Director, Specifications

DDC PROJECT #: **SANDRESPC**

PROJECT NAME: **EAST SIDE COASTAL RESILENCY FROM MONTGOMERY STREET TO EAST 25TH STREET**

ATTACHMENT A - BIDDERS QUESTIONS AND DDC RESPONSES

No.	Bidders Questions	DDC Responses
1	Drawings TC313, TC314, & TC317 show S.I.G. work zones and reference the OCMC stipulations as the means of determining the allowable work hours. OCMC Stipulations from NYC DOT are provided in Volume 3 of the project specifications; however, no stipulations are provided relating to any of the South Interceptor Gate (SIG) work (chamber SOE, building construction, etc). Please provide the allowable work hours for the work zones detailed in dwg TC313, TC 314 & TC 317.	Draft stipulations for the South Interceptor Gate area have been added to the bid documents. Refer to Attachment B of this Addendum.
2	Bid Drawing Sheet PCC301. There is an existing Catch Basin Replacement on Water Street @ Gouverneur Slip East. What are the Rim/Inv Elevations of the existing structure? What type of structure is installed? Is the new line to be tied into the existing 4x2 Combined Sewer? If so, what diameter and type of pipe is proposed?	The surveyed rim/grate elevation is 14.35”. See revised Note 5 on revised drawing PCC301. Refer to Attachment B of this Addendum.
3	Bid Drawing Sheet PCC 303. The Profile for MH 23-05 to Ex Sewer No 1 shows the new sewer line to be 24" DI CL 56, however there is no pay item for 24" DI CL 56 in the Bid Form. Please clarify.	Refer to Attachment C of this Addendum.
4	Bid Drawing Sheet PCC 304. There is a New 42" RCP replacing an existing 4' x 2.67' Brick Combined Sewer on this sheet, but no profile views provided, including rim and invert elevations between a proposed new 6' dia. MH and the New Chamber No. 3. Please provide. Also, what is the existing max. flow in the line being replaced? Is any of this segment to be installed with a Concrete Cradle and Piles?	Survey information and record drawings were unable to be procured for this sewer during the design phase and no profile was developed. The 42" combined sewer and manholes shall be on concrete cradle and piles per schedule shown on drawing PCS800. Pile spacing shall be per NYCDEP Sewer Design Standards. Refer to Note 4 on drawing PCC304 regarding field verification of existing sewer dimensions, flow line, inverts, etc. and requirements for reconstruction. Assume the bypass flow to be the same as the 48-inch combined sewer as stated in Note 6 on drawing PCC304.
5	Bid Drawing Sheet PCC 305. There is an existing High Pressure Steam Line(s) shown on the plans but not on the profiles that cross the proposed 30" RCP Combined Sewer between MH-31-01 and Ex. MH 01. What is the size of the line(s) and can they be shown on the profile view?	The high pressure steam line is a Con Edison 24” pipe which crosses the proposed 30” sewer between MH-31-01 and MH-31-02 and also between MH-31-03 and the Modified Existing Interceptor Manhole No. 1. See Con Edison steam mains and service plate 16 #545-2 for additional information.
6	Bid Drawing PCC 307. The profile for East 18th St & Ave C shows the proposed sewer to be 24" RCI CL III, but the Plan View shows the line to be 24" RCIP CL IV. Please clarify Class to be used at this location.	The plan view is correct; pipe should be 24” dia. RCP CL. IV. The profile on drawing PCC307 has been revised. Refer to Attachment B of this Addendum.

No.	Bidders Questions	DDC Responses
7	Bid Drawing SGC 303. Manholes MH-22-12, MH-22-11, & MH-22-10 are shown on SGC303 and appear to be same Manholes MH-23-05, MH-23-04 & MH-23-03 as shown on PCC303. Is this correct? Please clarify and if so, provide the correct ID to be used for these manholes.	Manhole ID's shown on PCC303 are correct. Drawing SGC303 has been revised. Refer to Attachment B of this Addendum.
8	Bid Drawing SGC 303. The plan shows a new catch basin to be constructed at the same location as the old catch basin. The note on this catch basin is cut off and can not be read. What is the type of new catch basin to be installed? That is the Rim El and Inv El? What is the outfall pipe diameter and type to be installed at this location? Please clarify.	Drawing SGC303 has been revised. Refer to Attachment B of this Addendum.
9	Bid Drawing SGC 303. The plan shows a proposed 8" DI Sanitary Sewer Line from the South Bldg to an existing Manhole on Jackson Street. The plan shows a proposed Oil Water Seperator and an Cleanout Manhole on this line with note refer to Sheet P701. The detail for the Cleanout Manhole found on Sheet SGC305, shows a wye connection off the 8" DI Line, with a riser and Frame and Cover at ground level. On P701, there is a proposed 6" Sewer Back Flow Valve and no Cleanout Manhole. Please clarify if a Cleanout Manhole or the Back Flow Valve are to be installed on this project at South Building.	Both valve manhole and cleanout are required. Drawings SGC303 and SGC305 have been revised. Refer to Attachment B of this Addendum.
10	Regarding Specifications Section 6.40 CR Section 3.0 states the field office must have a minimum floor area of 10,000 SF. Table 1 of the same section states the minimum floor area must be 5,000 SF. Please advise and please confirm the other requirements listed (i.e. field office to be partitioned into 35 rooms) are correct.	Minimum floor area is to be 10,000 SF. Table 1 has been revised to reflect clarification. Refer to Attachment B of this Addendum. It is confirmed the other requirements of the Specification are correct.
11	The price to cover for Item ESCR 51.11 (Page IG/PC-253) states that micropiles are included in the price for the chambers. Please confirm.	Micropiles are included in pay item ESCR-51.11C003: CHAMBER NO. 3. Please note that piles are paid for separately under the other chamber items.
12	Please specify where the boring logs for the borings shown on G014 – G018 are located. Please be as specific as possible as the appendices contain thousands of pages and are all separate files.	Four geotechnical engineering files have been added to the bid documents. Refer to Attachment B of this Addendum.
13	Dwg NGS802 states “For Secant Pile Tip El. See Dwg PCC300”. PCC300 is not included in the current plan set. Please provide PCC300 or specify the secant pile tip elevation for each interceptor gate chamber.	Based on conceptual calculations and the ground improvements indicated on both North and South Gate Chambers, Secant Pile Tip Elevations are as follow: North Gate Chamber with ground elevation say 6.0', the estimated Tip Elevation is about -62.0'. . South Gate Chamber with ground elevation say 9.0', the estimated Tip Elevation is about -43.0'. Contractor shall submit a complete SOE design calculation, signed and sealed by a licensed Professional Engineer in NY State as indicated on the notes on the drawings.

No.	Bidders Questions	DDC Responses
14	Spec. Sec. 01 11 00 – Summary of Work - Execution – Item D. The specification states “After each field test using wastewater, the Contractor shall thoroughly pressure wash the chamber, bypass channel and parallel sewer using clean water at a minimum pressure of 3,000 psi and minimum temperature of 150 Degrees F….” Water used to flush the parallel sewers will be drawn from City Hydrants. Is the heating of this water to 150 Degrees F a requirement for cleaning the parallel sewers? The water temperature requirement for cleaning of the chambers and bypass channels will be provided. The 3,000psi used for cleaning of the three items will be provided. Please clarify the cleaning water temperature for the parallel sewers.	Contractor shall provide the work as specified.
15	Dwg NGC306 shows a proposed 12” Ductile Iron Storm Pipe to be installed from a proposed TY 1 Catch Basin to a proposed TY 2 Catch Basin. Please provide Class of DI Pipe to be installed at this location.	Please see call-out on the drawing plan view which notes item 52.11D12
16	In the provided “Special Experience Requirements for the Bidder” document, a blackened box is placed on the “Micro-Tunneling/Pipe Jacking Work” section. Why is Micro Tunneling/Pipe Jacking a special experience requirement for bidders on this job? We do not have any associated bid items or specification. We do not have any indication of micro tunneling in the contract drawings and we are unable to find any micro tunneling scope of work. Please advise.	The Special Experience document has been updated, please refer to Attachment C of this Addendum.
17	Please provide boring information for locations M-27, M-28 & M-31. Currently the record of borings for these locations is indicated on Sheets 438 & 439, however, these sheets contain no boring information. It is imperative that bidders receive this information as soon as possible so that engineered SOE systems may be investigated and priced in a timely fashion.	Four geotechnical engineering files have been added to the bid documents. Refer to Attachment B of this Addendum.
18	"In reference to potential any type of contaminated soil and Bid Item JB 122(CE) Incremental Cost for MPG Containment Handling and disposal, please clarify the following questions explicitly: What type of contaminated soil does this bid item JB 122 (CE) include? Is it only for contaminated non-hazardous soil or contaminated petroleum non-hazardous soil or hazardous contaminated soil? We need to exquisitely understand and know what soil is supposed to be included in this pay item to be able to price up this bid item. Please clarify it."	All MGP incremental impact costs as stipulated by DEC and agreed to by Con Edison are covered under JB 122.

No.	Bidders Questions	DDC Responses
19	"In reference to potential any type of contaminated soil and Bid Item JB 122(CE) Incremental Cost for MPG Containment Handling and disposal, please clarify the following questions explicitly: Is the bid item JB 122 CE) only for Joint Bid Items Con Edison work or is this pay item JB 122(CE) for the entire project including any other excavation outside of the Joint Bid Cond Edison work? The Pay item quantity is a vastly large quantity, which is 10,000 CY just to cover JB Con Edison work. Please clarify it."	JB 122 is to be used for the original Parallel Conveyance Contract scope and its project limits.
20	We have concerns about the current bid date for the project and would like an extension of several weeks. There are open RFI questions that contractors are looking for clarification on. The postponement will allow contractors adequate time to review these future RFI responses and submit a thorough and cost-effective bid.	The Bid Opening date has been postponed.

DDC PROJECT #: **SANDRESPC**

PROJECT NAME: **EAST SIDE COASTAL RESILENCY FROM MONTGOMERY STREET TO EAST 25TH STREET**

ATTACHMENT B – REVISIONS TO THE DOCUMENTS

1. Volume 3 has been updated. Changes are Listed below
    - R-Pages updated. Changes are marked in the right border.
    - Table 1 on page G-31 of the General Pages updated. Changes are marked in the right border
    - Page IG/PC-451 of the IG/PC Pages has been updated. Changes are marked in the right border.
2. Updated Planholder List added to documents.
3. 4 Sheets in SANDRESPC Drawings Part 2 and SANDRESPC Drawings Part 3 updated:
    - SGC303
    - SGC305
    - PCC301
    - PCC307
4. Geotech reports added to documents.

DDC PROJECT #: **SANDRESPC**

PROJECT NAME: **EAST SIDE COASTAL RESILENCY FROM MONTGOMERY STREET TO EAST 25TH STREET**

ATTACHMENT C – REVISIONS TO PASSPORT FORMS

This Addendum initiates Round 4 of the procurement.

Please note that numbering of addenda is independent of rounds.

Questionnaire Changes:

Minimum Qualifications Section updated

Item Grid Changes:

The following Item Grid Changes have been made:

Bid Schedule grid:

- Additions:
  - 50.41C6C24
  - 51.11V004
- Removal
  - 51.11V000
- Quantity Changes
  - ESCR-70.13MC.9625

Allowances grid:

- Additions:
  - 6.52 FED

CITY OF NEW YORK
DEPARTMENT OF DESIGN AND CONSTRUCTION
DIVISION OF INFRASTRUCTURE

ADDENDA CONTROL SHEET

BID SUBMISSION DATE/ TIME: January 26, 2022; between 8:30 AM and 11:00 AM
BID OPENING DATE/ TIME: January 26, 2022; 11:30 AM

PROJECT No. : SANDRESPC

TITLE: EAST SIDE COASTAL RESILENCY FROM MONTGOMERY STREET TO EAST 25TH STREET

ADDENDA ISSUED	NO. OF DWG	DATE	APPROVED BY: SPECS UNIT	APPROVED BY: GENERAL COUNSEL
# 1 Questions from Bidders and Responses to Questions; Revisions to PASSPort Forms;		11/18/2021		
#2 Revised Bid Opening Date; Questions from Bidders and Responses to Questions; Revisions to Documents; Revisions to PASSPort Forms		11/24/2021		
#3 Revised Bid Opening Date ; Questions from Bidders and Responses to Questions; Revisions to PASSPort Forms; Revisions to Documents	4	12/23/2021		
#4 Questions from Bidders and Responses to Questions; Revisions to Documents	11	1/12/2022	Candace Chung	

THE CITY OF NEW YORK
DEPARTMENT OF DESIGN AND CONSTRUCTION
DIVISION OF INFRASTRUCTURE

1/12/2022

ADDENDUM No. # 4

FOR FURNISHING ALL LABOR AND MATERIAL NECESSARY AND REQUIRED FOR:

85021B0117 – SANDRESPC

EAST SIDE COASTAL RESILENCY FROM MONTGOMERY STREET TO EAST 25TH STREET

This addendum is issued for the purpose of amending the requirements of the Bid and Contract Documents and is hereby made a part of said Bid and Contract Documents to the same extent as though it were originally included therein.

The bidder is advised that the items listed below apply to the project:

1. The Bid Opening for the contract described below scheduled for January 18, 2021 at 11:30 pm is rescheduled to January 26, 2021 at 11:30 am.

2. Bidders Questions and Responses to Questions:
See Attachment A.

3. Revisions to Documents:
See Attachment B.

4. Revisions to PASSPort forms:
See Attachment C.

Transferring Data Between Rounds of an RFX: A new document titled "Transferring Data Between Rounds of an RFX" has been added to the Documents section of the View RFx tab. Please refer to this document when an addendum has been issued. Note: Whenever an addendum is issued, the RFX item grid will be cleared. You can import the work you have already done by following the steps on this document.

DDC strongly advises vendors to finalize and submit bids 48 hours prior to due date and time. The City is not responsible for technical issues (e.g. internet connection, power outages, technology malfunction, computer errors, etc.) related to bid submissions.

If additional information is required, please contact the Department of Design and Construction, Contract Section at (718) 391-1041 or by email at CSB_projectinquiries@ddc.nyc.gov.

Richard Jones, PE CWI CDT
Executive Director, Specifications

DDC PROJECT #: **SANDRESPC**

PROJECT NAME: **EAST SIDE COASTAL RESILENCY FROM MONTGOMERY STREET TO EAST 25TH STREET**

ATTACHMENT A - BIDDERS QUESTIONS AND DDC RESPONSES

ADDENDUM QUESTION #	BIDDER'S QUESTION	RESPONSE
1	Can you please forward to me the planholders list for the SANDRESPC Montgomery ST to E. 25th St. project?	Refer to Addendum 3, Attachment B.
2	If Furnishing and Installing the Portable Generators for North and South Interceptor Gate House Buildings are part of the Scope of Work, please provide specifications and details of the Portable Generators shown in Drawings E-705 and E-805.	The portable generators are not part of the Interceptor Gate House scope of work. The portable generators will be provided by DEP after construction is completed.
3	Please refer to TC320 & TC330 as an example. Please provide clarification for having both plans if these are identical.	The MPT set up may appear similar but the construction activity for the setups are different. TC320 accounts for the demo of the area for the watermain work, construction of the utility and restoration with temporary pavement. TC 330 shows construction of the permanent curb and sidewalk.
4	Bid Drawing PCC 301 Sheet 371 of 485, Note 4 states Contractor is to inspect previously Gunited 48" Sewer in accordance with Note 6. It is assumed this means Note 6 on this sheet and not General Note 6 shown on G010 Sheet 10 of 485. On PCC 301 Note 6 refers to a calculated full pipe flow of 65.46 MGD on this line. This assumes that this inspection and repair determination will take place during the construction of New Diversion Chamber 1 while the sewer segment is on bypass. Please clarify. Also, is there historical flow data available that can give us average daily flow on this line segment? If so, please provide this data so we can properly size the bypass system.	Note 4 on drawing PCC301 has been revised to reference Note 6 on PCC001. Refer to Attachment B of this Addendum. Bypassing to perform inspection and repair of the sewer can be completed per contractor means and methods. Extent of repair shall be contingent on condition assessment report and recommended repair method shall be approved by the City prior to the start of construction. If directed, gunite shall be paid under 54.31SR and sewer replacement shall be paid under 50.21C4C048D. Refer to Attachment C of this Addendum for Item Grid changes. Historical flow data for the sewer is not available.
5	Bid Drawing PCC 303 Sheet 373 of 485, Note 3 states Contractor is to inspect the existing 4' x 2'-8" Egg Brick Sewer in accordance with General Note 6. General Note 6 on this sheet pertains to the existing Con Edison Steam Line. General Note 6 on G010 Sheet 10 of 485. Note 6 refers to Water System Work. Also, PCC 303 Note 7 refers to a calculated full pipe flow of 29.29 MGD on this line. This assumes that this inspection and repair determination will take place during the construction of New Diversion Chamber 2 while the sewer segment is on bypass. Please clarify. Also, is there historical flow data available that can give us average daily flow on this line segment? If so, please provide this data so we can properly size the bypass system.	Note 3 on drawing PCC303 has been revised to reference Note 6 on PCC001. Refer to Attachment B of this Addendum. Bypassing to perform inspection and repair of the sewer can be completed per contractor means and methods. Extent of repair shall be contingent on condition assessment report and recommended repair method shall be approved by the City prior to the start of construction. If directed, gunite shall be paid under 54.31SR and sewer replacement shall be paid under 50.21C4C048D. If new manholes are required, those would be paid for under 51.11P006.Refer to Attachment C of this Addendum for Item Grid changes. Historical flow data for the sewer is not available.

ADDENDUM QUESTION #	BIDDER'S QUESTION	RESPONSE
6	Bid Drawing PCC 304A Sheet 374 of 485, Note 7 states Contractor is to inspect the existing 4’ x 4’ Combined Sewer has a calculated full pipe flow of 55.07 MGD which is to be maintained throughout construction. Is there historical flow data available that can give us average daily flow on this line segment? If so, please provide this data so we can properly size the bypass system.	Historical flow data for the sewer is not available.
7	Bid Drawing PCC 304 Sheet 375 of 485, Note 4 requires CCTV inspection to verify service connections and dimensions of curved sewer. What are the limits of this inspection (starting point and ending point), and can this inspection be performed without bypass in place? Does the verification of service connections include verification if the services are active or abandoned? If so, how is and active service to be confirmed? Also, Note 6 states that the existing 48” combined sewer has a calculated full pipe flow of 45.94 MGD which is to be maintained throughout construction. Is there historical flow data available that can give us average daily flow on this line segment? If so, please provide this data so we can properly size the bypass system.	The curved sewer shall be inspected between the manhole to be replaced with the 6' dia. manhole and the connection to the existing 48" combined sewer (i.e., the length of sewer to be replaced). Inspection of the sewer can be completed per contractor means and methods. All connections, regardless of status, should be reconnected to the new sewer. Historical flow data for the sewer is not available.
8	Bid Drawing PCC 305 Sheet 376 of 485, Note 6 states that the existing 5’ x 6.5’ combined sewer has a calculated full pipe flow of 104.75 MGD which is to be maintained throughout construction. Is there historical flow data available that can give us average daily flow on this line segment? If so, please provide this data so we can properly size the bypass system.	Historical flow data for the sewer is not available.
9	Bid Drawing PCC 307 Sheet 377 of 485, Note 6 states that the existing 8’ x 6’ combined sewer has a calculated full pipe flow of 39.94 MGD which is to be maintained throughout construction. Also, Note 9 states that the existing 12” VCP sewer is to be bypassed during the construction of the Northern Interceptor Gate Chamber. Is there historical flow data available for these two line segments that can give us average daily flow on this line segment? If so, please provide this data so we can properly size the bypass system.	Historical flow data for the sewer is not available.
10	Bid Drawing PCC 308 Sheet 378 of 485, Note 4 states that the dry weather flow to be maintained in M-38 and M-38A Regulators. Please provide dry weather flow data in order to properly size the bypass system.	Notes on drawings PCC308 and PCC309 have been revised. Refer to Attachment B of this Addendum. The contractor must maintain dry weather flow levels below the regulator overflow weir elevations and prevent dry weather overflows. The contractor is responsible for protecting the work during wet weather flow events. Historical flow data for the sewer is not available.

ADDENDUM QUESTION #	BIDDER'S QUESTION	RESPONSE
11	The New Southern Interceptor Gate Chamber is to be installed on the existing 9'-0" Interceptor on FDR Drive. We have not been able to find the flow data for the interceptor. Please provide.	Refer to specification section 40 05 59.02 in the IG/PC-Pages for flume requirements for construction of the interceptor gate chamber. Historical flow data for the interceptor sewer is not available.
12	The New Northern Gate Chamber is to be install on the existing 108" Interceptor on E. 20th Street. We have not been able to find the flow data for the interceptor. Please provide.	Refer to specification section 40 05 59.02 in the IG/PC-Pages for flume requirements for construction of the interceptor gate chamber. Historical flow data for the interceptor sewer is not available.
13	Bid Drawing PCC 304A Sheet 374 of 485 shows that the lateral sewer connections require that the 24" RCP parallel conveyance sewer is to be constructed on a concrete cradle and on micropiles. The Parallel Conveyance Foundation Recommendations Schedule S.O.E. on PCS 300, Sheet 407 of 485 does not include this in the schedule. Please clarify and/or provide.	See drawing Sheet 476, PCS800.
14	Bid Drawing PCC 302 Sheet 375 of 485 shows that the lateral sewer connections require that the 24" RCP parallel conveyance sewer is to be constructed on a concrete cradle and on micropiles. The Parallel Conveyance Foundation Recommendations Schedule S.O.E. on PCS 300, Sheet 407 of 485 does not include this in the schedule. Please clarify and/or provide.	Sewer shall only be constructed on a concrete cradle.
15	Please provide a beam schedule for the North Interceptor Gate chamber similar to the schedule provide for the South Chamber (defining beam size and reinforcement).	North Interceptor Gate chamber beam schedule is shown on drawing IGS702, Sheet 332.
16	Bid Drawing PCC 600 Sheet 443 of 485 shows the proposed details for Diversion Chamber No.1 on the M-22 Regulator. The details do not show new steps. Are steps required on this structure? Please clarify.	No steps or manhole rungs are required on Diversion Chamber No. 1.
17	Refer to Section 6.40 CR – Engineer's Field Office (sheet G-27) in the provided contract specifications. There is a contradiction between section 3.0 Specific Requirements for Engineer's Field Office and Table 1 – Additional Specific Requirements. One says "… the Field Office shall have a minimum floor area of 10,000 SF," while the table shows that the Minimum useable floor space (Square Feet) for Type CR is 5,000 SF. Please tell us what Minimum floor area is required for item 6.40 CR – Engineer's Field Office Type "CR" on this project.	Refer to question/response #10 in Addendum 3, Attachment A.
18	Due to the complexity and irregularity of the interceptor gate chamber geometry, it is difficult to conduct an accurate takeoff of reinforcing steel in the chamber concrete. Please provide a bar list for chamber structural concrete or provide additional detail views to provide additional clarity.	Contractor shall base the bid on the details provided in the contract documents.

ADDENDUM QUESTION #	BIDDER'S QUESTION	RESPONSE
19	Is the excavated soil within Southern and Northern Interceptor gate chambers going to be deemed to be a clean fill material or what type of soil is it supposed to be deemed for bidding purposes?	Assume for bidding that the excavated soil is non-hazardous contaminated soil. The contractor shall test and confirm for disposal purposes.
20	In order to develop a final design for SOE to install drop manholes at locations M27 & M28, it is imperative that we can understand the basis of the suggested conceptual SOE design provided in the contract plans. Please clarify why the suggested tip elevations for secant piles are shown penetrating the bedrock (and in the case of M28, secant piles are shown penetrating 15 feet below expected bedrock elevation). Would the combination of secant piles plus jet grouting the bottom of excavation be sufficient to achieve a water-tight SOE system that has adequate strength to support the excavation?	The design took into account the hydrostatic uplift pressures on the bottom, also the need to have the secant piles go sufficiently deep enough to provide cutoff for the excavation, as well as to reduce the hydraulic gradient to prevent boiling/heave on the inside of the excavation. The design also considered factors of safety for embedment length, passive pressures, and rotation of the excavation. An alternate SOE design may be proposed, provided that the contractor's engineer provides suitable documentation (signed/sealed calculations by a New York P.E.) of the analyses needed to demonstrate the same.
21	Bid Drawing PCC 303 Sheet 373 of 485 Note 3 states the Contractor to inspect the 4’ x 2’-8” Brick Sewer, and to perform Guniting (Shotcrete) or sewer replacement to the upstream and downstream manholes of the connection point…at no cost to the city. There is significant difference in repair method costs. How is the Contractor to determine whether Guniting or Sewer replacement is required prior to bid? Can the Guniting work be paid for under Bid Item 54.31SR Shotcrete for Repair Work, and can an open cut repair item be included for the 4’ x 2’-8” Brick Sewer? Please clarify.	The contractor shall include in their bid the cost for both items under items 54.31SR and 50.21C4C048C. If new manholes are required, those would be paid for under 51.11P006. Refer to Attachment C of this Addendum for Item Grid changes.
22	Bid Drawing PCC 301 Sheet 371 of 485, Note 4 states Contractor is to inspect previously Gunited 48” Sewer in accordance with Note 6. It is assumed this means Note 6 on this sheet and not General Note 6 shown on G010 Sheet 10 of 485. On PCC 301 Note 6 refers to a calculated full pipe flow of 65.46 MGD on this line. This assumes that this inspection and repair determination will take place during the construction of New Diversion Chamber 1 while the sewer segment is on bypass. Please clarify. Also, is there historical flow data available that can give us average daily flow on this line segment? If so, please provide this data so we can properly size the bypass system.	Note 4 on drawing PCC301 has been revised to reference Note 6 on PCC001. Refer to Attachment B of this Addendum. Extent of repair shall be contingent on condition assessment report and recommended repair method shall be approved by the City prior to the start of construction. If directed, gunite shall be paid under 54.31SR and sewer replacement shall be paid under 50.21C4C048D. Historical flow data for the sewer is not available.
23	Bid Drawing PCC 303 Sheet 373 of 485, the New Southern Interceptor Gate Chamber is to be constructed on the existing 108” (9’-0”) interceptor. No flow data has been provided for sizing of the bypass system required during construction. Please provide the average daily flow data for the interceptor.	Refer to specification section 40 05 59.02 in the IG/PC-Pages for flume requirements for construction of the interceptor gate chamber. Historical flow data for the interceptor sewer is not available.

ADDENDUM QUESTION #	BIDDER'S QUESTION	RESPONSE
24	Bid Drawing PCC 304A Sheet 374 of 485, the Deep Drop-Pipe Manhole on Sewer No. 1 is to be constructed on the existing 108” (9’-0”) interceptor. No flow data has been provided for sizing of the bypass system required during construction. Please provide the average daily flow data for the interceptor.	Historical flow data for the interceptor sewer is not available.
25	Bid Drawing PCC 304 Sheet 375 of 485, the Deep Drop-Pipe Manhole on Sewer No. 2 is to be construction on the on the existing 108” (9’-0”) interceptor. No flow data has been provided for sizing of the bypass system required during construction. Please provide the average daily flow data for the interceptor.	Historical flow data for the interceptor sewer is not available.
26	Bid Drawing PCC 307 Sheet 377 of 485, Existing Manhole No. 3 is to be modified and the New Northern Interceptor Gate Chamber is to be constructed on the existing 108” (9’-0”) interceptor. No flow data has been provided for sizing of the bypass system required during construction. Please provide the average daily flow data for the interceptor.	Historical flow data for the interceptor sewer is not available. For the Northern Interceptor Gate Chamber, refer to specification section 40 05 59.02 in the IG/PC-Pages for flume requirements for construction of the chamber.
27	Bid Drawing PCC 304 Sheet 375 of 485, there is a proposed 42” Combined sewer installed on an existing 4’-0” x 2’-8” Brick Sewer at the intersection of Baruch Drive & Delancey St North. There is a New 6’ Dia. Precast Manhole to be installed on this run, along with the New Chamber 3. We were not able to find the profile view of this line. Please provide the proposed profile view along with flow data on the existing brick sewer including the average daily flow.	Survey information and record drawings were unable to be procured for this sewer during the design phase and no profile was developed. Refer to Note 4 on drawing PCC304 regarding field verification of existing sewer dimensions, flow line, inverts, etc. and requirements for reconstruction. Also refer to specification section ESCR 51.11.
28	Drawing SGS801 shows that the SIG Chamber sits on 14 ea. 16” mini piles but drawing IGS shows 18 mini piles instead. Which one is correct?	IGS405 is correct. Drawing SGS801 has been revised, refer to Attachment B of this Addendum.
29	Please confirm if Buy America requirements are applicable to this project.	There are no Buy America requirements on this contract.
30	Items 54.12CS and 6.50 have the same description “Cleaning of Drainage Structures". Please clarify if both items are needed in this bid.	Item 6.50 has been removed. Refer to Attachment C of this Addendum.
31	From previously submitted PCC RFI #3 that was not answered, “Bid Drawing SGC 303, the plan shows a new catch basin to be constructed at the same location as the old catch basin. The note on this catch basin is cut off and cannot be read. What is the type of new catch basin to be installed? That is the Rim El and Inv El? What is the outfall pipe diameter and type to be installed at this location? Please clarify.”	Drawing SGC303 has been revised. Refer to Addendum 3, Attachment B.

ADDENDUM QUESTION #	BIDDER'S QUESTION	RESPONSE
32	In reference to potential any type of contaminated soil and Bid Item JB 122(CE) Incremental Cost for MPG Containment Handling and disposal, please clarify the following questions explicitly: We cannot find job specific bid item JB 122 (CE) and its inclusions within our contract documents. What does this pay item JB 122 (CE) include? Does this pay item include any contaminated material handling cost, any testing cost? Please clarify it.	Con Edison's JB 122 specification is included in the joint bid package. JB-122 is a mechanism to pay the Contractor the incremental costs for handling, disposal, and waste, of MGP impacts agreed to be the responsibility of Con Edison.
33	Per Drawing IGI100 and Drawing IGE100, there will be works that need to be done for the Telemetry Panel at Manhattan Pump Station. Please provide drawings, details, specs and scope of work.	The existing Manhattan Pump Station MPS-TP-PLC shall be programmed to accept signals from the north and south interceptor gate control buildings per the requirements of specification section 40 66 53 in the IG/PC-Pages and as shown on the contract drawings. Additional telemetry system requirements include, but are not limited to, the following: Section 01 75 10 for field testing, 40 05 59.01 for integration with interceptor gate system, 40 61 13 for PMCS general requirements, and 40 61 26 for training requirements (all in the IG/PC-Pages).
34	Reinforcement size and spacing for South and North Interceptor Gate buildings' stem walls is not specified on building foundation sections S-707, S-708, S-807, S-808. Please provide stem wall section detail showing the reinforcement.	Stem reinforcement is (#5 @12") both faces (sides) and both directions (horizontal and vertical) for both North and South buildings. Refer to drawings S-707, S-708, S-807 & S-808.
35	Structural steel decking for South and North Interceptor Gate buildings are shown on various architectural and structural drawings; however, the decking size does not appear to be specified. Please specify the metal decking size for each building.	Refer to Note 3 on drawing S-706, which specifies the metal decking information and type. The same note applies to S-806.
36	Please provide us with a separate bid item to get paid for installing and removal of decking work over the excavated areas or let us know under what bid item we will be paid for decking. We need to furnish, install, and remove decking as needed on this project to comply with Maintenance and Protection of Traffic and Safety. Nevertheless, there is no bid item for decking. NYCDDC used to provide us with the bid item 70.21DK Decking for this work in the past. We must know under what bid item we will be paid for decking work. Otherwise, it cannot be a part of our cost for the bid submission, and it will be an extra work to us in the field when we need to do it.	The MPT General Notes (TC300) Note 11 states that there shall be no separate payment for decking work. The cost is to be included in Maintenance of Site unless otherwise noted. Drawing TC300 has been revised, refer to Attachment B of this Addendum. Please be advised that for the large manhole trenching, the OCMC Stipulations will allow full closure thereby not requiring bridging. Regarding the South Interceptor Gate Chamber next to the FDR Drive, drawing TC312 has been revised, refer to Attachment B of this Addendum.

ADDENDUM QUESTION #	BIDDER'S QUESTION	RESPONSE
37	Please refer to drawing IGE100, Southern Building/Chamber conduit schedule. Conduit S-HPU-MOTOR-STARTER-001-002 shows the conduit going to N-HPU-MOTOR STARTER-001 located in the Northern building. Please confirm this is a typo and it should be S-HPU-MOTOR STARTER-001 instead.	Drawing IGE100 has been revised, refer to Attachment B of this addendum.
38	Please refer to drawing E705, Southern building. One line diagram shows panel "NIGL". Please confirm this is a typo and revise the drawing to state "SIGL" instead.	One-Line Diagram as been revised to show SIGL AND SIGH on drawing E-705. Refer to Attachment B of this addendum.
39	DWG PCC301 Sheet 371 of 485. This sheet was revised through Addendum No. 3 issued 12/23/2021. This drawing added the note on the profile for New 6' Manhole No. 22-02 to be installed on piles. Is this correct? There is no mention of this being a revision in Addendum No.3 or previous addendums issued. Please clarify.	Drawings PCC301 and PCC303 have been revised to remove "on piles" for MH-22-02 and MH-22-08. Refer to Attachment B of this Addendum.
40	Drawing PCC309 Detail B indicates that Modified Chamber No 1 to Existing Regulator M-38 is to be supported on piles and to see drawing PCS630. However, PCS630 does not show any piles. Please confirm that Modified Chamber No 1 is not pile supported?	Regulator M-38 is an existing regulator chamber which is on piles. No change is proposed to the foundation of the chamber once modified.
41	Drawing PCC309 Profile M-38B Avenue C indicates that Modified Chamber No 3 to Existing Regulator M-38B is to be supported on piles and to see drawing PCS633. However, PCS633 does not show any piles. Please confirm that Modified Chamber No 3 is not pile supported?	Regulator M-38B is an existing regulator chamber which is on piles. No change is proposed to the foundation of the chamber once modified.
42	Drawing PCC301 Note 4 reads "Contractor to inspect previously gunited 48" circular brick sewer…. Contractor to perform additional gunite or sewer replacement in conformance with condition assessment report recommendations. This additional guniting or sewer replacement shall extend to the upstream manhole and downstream manhole of the connection point." With the current condition of the 48" brick sewer, how is the Contract to determine the extent and type of repair (gunite or replacement) if any required and to be included at no additional costs to the City? Please clarify?	Note 4 on drawing PCC301 has been revised to reference Note 6 on PCC001, which includes the inspection requirements for the sewer. Refer to Attachment B of this Addendum. Extent of repair shall be contingent on condition assessment report and recommended repair method shall be approved by the City prior to the start of construction. If directed, gunite shall be paid under 54.31SR and sewer replacement shall be paid under 50.21C4C048D.

ADDENDUM QUESTION #	BIDDER'S QUESTION	RESPONSE
43	Drawing PCC303 Note 3 reads "Contractor to inspect 4'-0"H x 2'-8" egg brick sewer…. Contractor to perform gunite or sewer replacement in conformance with condition assessment report recommendations. This additional guniting or sewer replacement shall extend to the upstream manhole and downstream manhole of the connection point." With the current condition of the 4'-0"H x 2'-8" egg brick sewer, how is the Contract to determine the extent and type of repair (gunite or replacement) if any required and to be included at no additional costs to the City? Please clarify.	Note 3 on drawing PCC303 has been revised to reference Note 6 on PCC001, which includes the inspection requirements for the sewer. Refer to Attachment B of this Addendum. Extent of repair shall be contingent on condition assessment report and recommended repair method shall be approved by the City prior to the start of construction. If directed, gunite shall be paid under 54.31SR and sewer replacement shall be paid under 50.21C4C048D. If new manholes are required, those would be paid for under 51.11P006.
44	Drawing PCC304A shows installation of Special Deep Drop-Pipe Manhole on Existing 108" Sewer No. 1. No flow data is provided on the plan sheet. Please provide the MGD Flow Data to be maintained on the 108" Sewer in order to determine bypass requirements? Can flows be flumed during construction of this structure, like the method of flow control during construction of the Interceptor Gate Chambers? Please clarify.	Historical flow data for the interceptor is not available. Fluming is a means and methods available to the contractor and must be submitted for approval by the Engineer.
45	Drawing PCC304 shows installation of Special Deep Drop-Pipe Manhole on Existing 108" Sewer No. 2. No flow data is provided on the plan sheet. Please provide the MGD Flow Data to be maintained on the 108" Sewer in order to determine bypass requirements? Can flows be flumed during construction of this structure, like the method of flow control during construction of the Interceptor Gate Chambers? Please clarify.	Historical flow data for the interceptor is not available. Fluming is a means and methods available to the contractor and must be submitted for approval by the Engineer.
46	Drawing PCC304 shows installation of New Chamber No. 3 on existing 4'-0" x 2'-8" Brick Combined Sewer. No flow data is provided on the plan sheet. Please provide the MGD Flow Data to be maintained on the brick combined sewer in order to determine bypass requirements?	Refer to Note 4 on PCC304 regarding field verification of existing sewer dimensions, flow line, inverts, etc. and requirements for reconstruction. Also refer to specification section ESCR 51.11 in the IG/PC-Pages.
47	The HAZ Pages in the Specification Book Volume 3, HAZ-1 to HAZ 34 provide for items of work in Sections ESCR 8.01, ESCR 8.01 C1, ESCR 8.01 C2, ESCR 8.01 H, ESCR 8.01 W1 and 8.01 W2. All sections provide a Summary or Work, and Measurement and Payment for the work. There are no Bid Items provided in the current Pricing Schedule. Please provide these items along with estimated quantities for each Work Item.	Refer to Attachment C of this Addendum.

DDC PROJECT #: **SANDRESPC**

PROJECT NAME: **EAST SIDE COASTAL RESILENCY FROM MONTGOMERY STREET TO EAST 25TH STREET**

ATTACHMENT B – REVISIONS TO THE DOCUMENTS

1. Volume 3 has been updated. Changes are Listed below:
    - R-Pages updated. SB 21-003 and SB 21-004 added.
    - OCMC Stipulations Updated – Added 10/1/2020 stipulations for South Interceptor Gate after existing OCMC Stipulations

2. The following Contract Drawings have been revised and replaced:
    - G006
    - TC300
    - TC312
    - E-705.00
    - IG000
    - IGE100
    - NGC302
    - PCC301
    - PCC303
    - PCC308
    - PCC309

DDC PROJECT #: **SANDRESPC**

PROJECT NAME: **EAST SIDE COASTAL RESILENCY FROM MONTGOMERY STREET TO EAST 25TH STREET**

ATTACHMENT C – REVISIONS TO PASSPORT FORMS

This Addendum initiates Round 5 of the procurement.

Please note that numbering of addenda is independent of rounds.

Questionnaire Changes:

None

Item Grid Changes:

Deleted Items:

1. 6.50

Added Items:

1. ESCR-8.01 C1
2. ESCR-8.01 H
3. ESCR-8.01 W1
4. ESCR-8.01 W2-1

Revised Quantity:

1. 50.21C4C048D
2. 51.11P006
3. 54.12CS
4. 54.31SR
5. ESCR-70.13MC.1600

CITY OF NEW YORK
DEPARTMENT OF DESIGN AND CONSTRUCTION
DIVISION OF INFRASTRUCTURE

ADDENDA CONTROL SHEET

BID SUBMISSION DATE/ TIME: February 4, 2022; between 8:30 AM and 11:00 AM
BID OPENING DATE/ TIME: February 4, 2022; 11:30 AM

PROJECT No. : SANDRESPC

TITLE: EAST SIDE COASTAL RESILENCY FROM MONTGOMERY STREET TO EAST 25TH STREET

ADDENDA ISSUED	NO. OF DWG	DATE	APPROVED BY:	
			SPECS UNIT	GENERAL COUNSEL
# 1Questions from Bidders and Responses to Questions; Revisions to PASSPort Forms;		11/18/2021		
#2 Revised Bid Opening Date; Questions from Bidders and Responses to Questions; Revisions to Documents; Revisions to PASSPort Forms		11/24/2021		
#3 Revised Bid Opening Date ; Questions from Bidders and Responses to Questions; Revisions to PASSPort Forms; Revisions to Documents	4	12/23/2021		
#4 Questions from Bidders and Responses to Questions; Revisions to Documents	11	1/12/2022		
#5 Revised Bid Opening Date Questions from Bidders and Responses to Questions; Revisions to Documents		1/24/2022		CAC

THE CITY OF NEW YORK
DEPARTMENT OF DESIGN AND CONSTRUCTION
DIVISION OF INFRASTRUCTURE

1/24/2022

ADDENDUM No. # 5

FOR FURNISHING ALL LABOR AND MATERIAL NECESSARY AND REQUIRED FOR:

85021B0117 – SANDRESPC

EAST SIDE COASTAL RESILENCY FROM MONTGOMERY STREET TO EAST 25TH STREET

This addendum is issued for the purpose of amending the requirements of the Bid and Contract Documents and is hereby made a part of said Bid and Contract Documents to the same extent as though it were originally included therein.

The bidder is advised that the items listed below apply to the project:

1. The Bid Opening for the contract described below scheduled for January 26, 2022 at 11:30 am.is rescheduled to February 4, 2022 at 11:30 am.

2. Bidders Questions and Responses to Questions:
See Attachment A.

3. Revisions to Documents:
See Attachment B.

4. Revisions to PASSPort forms:
See Attachment C.

Transferring Data Between Rounds of an RFX: A new document titled "Transferring Data Between Rounds of an RFX" has been added to the Documents section of the View RFx tab. Please refer to this document when an addendum has been issued. Note: Whenever an addendum is issued, the RFX item grid will be cleared. You can import the work you have already done by following the steps on this document.

DDC strongly advises vendors to finalize and submit bids 48 hours prior to due date and time. The City is not responsible for technical issues (e.g. internet connection, power outages, technology malfunction, computer errors, etc.) related to bid submissions.

If additional information is required, please contact the Department of Design and Construction, Contract Section at (718) 391-1041 or by email at CSB_projectinquiries@ddc.nyc.gov.

Richard Jones, PE CWI CDT
Executive Director, Specification

DDC PROJECT #: **SANDRESPC**

PROJECT NAME: **EAST SIDE COASTAL RESILENCY FROM MONTGOMERY STREET TO EAST 25TH STREET**

ATTACHMENT A - BIDDERS QUESTIONS AND DDC RESPONSES

ADDENDUM QUESTION #	BIDDER'S QUESTION	RESPONSE
1	Refer to Section 6.40 CR – Engineer's Field Office, page G-31 states "The Field Office shall be partitioned to provide 35 rooms, one of which shall be at least 150 SF in area …". Please provide floor plan for this office complex and provide a location adjacent to the project site suitable to place the Engineers Office.	It is the contractor's responsibility to find a suitable field office.
2	Specification for item PK-ESCR 028B does not provide information as to how many lbs/ per sq ft of the exposed aggregate is needed for the new sidewalk. Please tell us how many pounds per square foot is required for this bid item. Please provide us specific exposed aggregate suppliers you would like for us to use on this job. Please provide a picture or rendering of this new sidewalk.	A lbs/SF quantity can not be provided since it will vary depending on chosen manufacturer, aggregate density, concrete mix and final retardant. Mock-ups are required to finalize lbs/SF quantity required. Specification PK-ESCR 028 in the SM-Pages and drawing LD727 have been revised, refer to Attachment B and Attachment C of this Addendum. Please see as-built locations of the East Side Coastal Resiliency, Asser Levy Park for acceptable exposed aggregate sidewalks.
3	Both items 6.03AA and 6.75 refer to the same activity, milling asphalt pavements. Please clarify if both items are needed in this bid.	Both items are provided based on different methods of existing asphalt removal.
4	Please clarify if mechanical lug/clamp connections can be used instead of exothermic connections for the grounding system for connections to the following equipment: Trans S cabinet, building steel, water main.	Mechanical lug/clamp can be used for Trans S cabinet and water main which are exposed. Building steel connections shall be by exothermic weld if concealed, if exposed mechanical lug/clamp can be utilized.

ADDENDUM QUESTION #	BIDDER'S QUESTION	RESPONSE
5	We cannot locate drawing IGC300 in the drawing set. It says sheet 323 in the table of contents but sheet 323 is for drawing S001. Please provide drawing IGC300.	Drawing IGC300 is sheet 307. Table of Contents drawing G006 was revised, refer to Attachment B in Addendum 4.
6	Please provide information on the length of the duct banks from interceptor buildings to interceptor chambers. Is this information found on drawing IGC300?	Yes, IGC300 provides duct bank information.
7	E drawings show a “SYSTEM CONTROL PANEL” and “INTERCEPTOR GATE SYSTEM CONTROL PANEL” to be 2 different panels. However, IGE drawings show only one panel called “INTERCEPTOR GATE SYSTEM CONTROL PANEL”. Drawing IGE110 does not mention a separate system control panel. However drawings E702 and E705 shows both panels.	IGE drawings are correct. There is only one panel.
8	Drawing E702 mentions an OWS Leak Detection Panel and cabling to 3 sensors with explosion proof fittings. Please clarify where these sensors are located. Which drawing shows the location of OWS.	OWS is located on plumbing drawings P-703 and P-803. Sensors are located within OWS per manufacturers recommendations.
9	Please confirm we are required to use NEMA12 in the Electrical Room, NEMA 4X in Hydraulics/Mechanical Room and NEMA7 in interceptor gate chamber and Oil water separator.	Confirmed that this is correct, unless specifically noted otherwise within the specifications.
10	Drawing IGE110 shows power wiring to go from flush pumps motor starter panels to the flush pump motors. However, we are having trouble locating where these flush pumps. Please provide information on where they are located and which drawings to refer to.	The flush pumps are located within the Interceptor Gate Buildings and are shown on drawings IGM410, IGM610, IGM415, and IGM615 in the room labeled "PUMP AREA" as well as on drawings E-702 and E-802.

ADDENDUM QUESTION #	BIDDER'S QUESTION	RESPONSE
11	Drawing IGE105 shows connections at Manhattan Pump Station and equipment to be installed but we do not have a drawing showing the layout of the new equipment in Manhattan Pump Station. Please provide a plan drawing for Manhattan Pump Station showing all new equipment and connections.	All available information has been provided. Installation of equipment within MPS must be coordinated with the City and submitted for approval.
12	Please provide the street restoration drawings at Delancey St. South and Lewis Street.	The restoration is limited to only trench restoration. Therefore the cost is included under the various sewer items and as specified under Division IV-General Construction Provision in the Standard Sewer and Water Main Specification. Trench restoration shall also be as detailed in the NYCDOT Standard Details of Construction. Existing pavement thickness may be found in the Proposed Alternative Interceptor Pipe Route Geotechnical Report.

DDC PROJECT #: **SANDRESPC**

PROJECT NAME: **EAST SIDE COASTAL RESILENCY FROM MONTGOMERY STREET TO EAST 25TH STREET**

ATTACHMENT B – REVISIONS TO THE DOCUMENTS

1. Planholder's List added to Documents
2. Volume 3 has been updated. Changes are Listed below:
    - IG-PC Pages. Changes Throughout
    - Section – PK-ESCR 028 of SM Pages Updated
    - OCMC Stipulations Updated

SANDRESPC Planholder List

Vendor	Phone Number	Email Address
ADC CONSTRUCTION L.L.C	7186285555	adcconstruction@verizon.net
AEIS LLC ATLASEVALUATION INSPECTION SERVICE	7323887711	pgoel@aeis.com
AKELA CONTRACTING LLC	7183284900	kwilliams@akelacontracting.com
ALLSTARS SECURITY & PROTECTIVE SERVICES	9173090521	allstarsprotective@gmail.com
BEAVER CONCRETE CONSTRUCTION COMPANY INC	7323355700	brucae@beavercc.com
CAC INDUSTRIES INC	7187293600	mcapasso@cacindinc.com
CHEMTECH CONSULTING GROUP INC	9087898900	eh@chemtech.net
DIFAZIO INFRASTRUCTURE- DIFAZIO INDUSTRIES JV	7187206966	JOHND@DIFAZIOIND.NET
E.E. CRUZ & COMPANY, INC.	2124313993	jmalandro@eecruz.com
E-J ELECTRIC INSTALLATION COMPANY	7187869400	amann@ej1899.com
HELLMAN ELECTRIC LLC	7187674420	allen@hellmanelectric.com
HUICATAO CORP	7183561983	phui@huiconstruction.co
Infinite Consulting Corp	5163311797	ehirani@infiniteconsultingcorp.com
INTER CONTRACTING CORP	9148630000	mmutino@intercontractingcorp.com
J ANTHONY ENTERPRISES INC	6315893244	JEFF@JANTHONYENT.COM
J PIZZIRUSSO LANDSCAPING CORP	7185316084	JPLCORP@aol.com
JLJ IV ENTERPRISES INC	7184655600	JLJ@jljiv.com
Joes Pest Control	7184931745	joes@jpestcontrol.com
JOHN P PICONE INC	5162391600	bids@johnpicone.com
JRCRUZ CORP	7322900700	engineering@jrcruz.com
JUDLAU CONTRACTING INC	7185542320	rocken@judlau.com
LAPERUTA CONSTRUCTION CORP	7327717359	MLAPERUTA55@GMAIL.COM
LO SARDO GENERAL CONTRACTORS INC	7186474924	silvio@losardo.net
MARIANI METAL FABRICATORS USA, INC	4167982969	vmariani@marianimetal.com
MASPETH SUPPLY CO LLC	7187867000	maspethsupplyco@gmail.com
MFM Contracting Corp.	9147778292	mvp@petromfm.com
MLJ Contracting Corp	7185719599	tiovino@iovinoent.com
MTS INFRASTRUCTURE LLC	9142423583	mmartins@mtsinfrastructure.com
NEW YORK CONCRETE CORPORATION	7189673720	tsolimeo@newyorkconcrete.com
NORTHEAST REMSCO CONSTRUCTION INC	7325576100	info@northeastconstruction.org
NY ASPHALT INC	7189666466	mthompson@nyasphalt.com
P&T II CONTRACTING CORP	7182060245	Office@pt2contracting.com
PADILLA CONSTRUCTION SERVICES, INC.. PCS	5163386848	Alexander.Holuka@pcscst.com
Paul Bunyon Tree Care, Inc.	5168832298	bhb64@aol.com
PAUL J. SCARIANO INC	914 6239200	INFO@PAULJSCARIANO.COM
PERFETTO CONTRACTING CORP	718 8588600	cperfetto@perfettocontracting.com
PERFETTO ENTERPRISES COMPANY INC	718 4424212	KFeretzanis@perfettoent.com
POSILLICO CIVIL INC	631 2491872	jsheehan@posillicogroup.com
PRIMA PAVING CORP.	718 5920302	zkhan@primapaving.com
RESTANI CONSTRUCTION CORP	718 7280870	salr@excellentpaving.com
STANTEC CONSULTING SERVICES INC	212 3665600	Michael.Fitzpatrick@stantec.com
STEVEN DUBNER LANDSCAPING	631 7771800	sdubner@sdlco.com
The Lane Construction Corporation	203 2353351	masschiller@laneconstruct.com
TRIUMPH CONSTRUCTION CORP	718 8616060	DCUZZI@TRIUMPHCONSTCORP.COM
TULLY CONSTRUCTION CO. INC.	718 4467000	DPhilips@tullyconstruction.com
VALLEY TREE & LANDSCAPE SERVICE INC	516 8897534	vlytree@yahoo.com
VIF CORP	7183617949	vifcorp@aol.com
VMR Civil LLC	516 3491900	ROSS@LLPAINT.COM
WELSBACH ELECTRIC CORP	718 6707846	kenneth_brouwer@emcorgroup.com

DDC PROJECT #: **SANDRESPC**

PROJECT NAME: **EAST SIDE COASTAL RESILENCY FROM MONTGOMERY STREET TO EAST 25TH STREET**

ATTACHMENT C – REVISIONS TO PASSPORT FORMS

This Addendum initiates Round 6 of the procurement.

Please note that numbering of addenda is independent of rounds.

Questionnaire Changes:

None

Item Grid Changes:

None

CITY OF NEW YORK
DEPARTMENT OF DESIGN AND CONSTRUCTION
DIVISION OF INFRASTRUCTURE

ADDENDA CONTROL SHEET

BID SUBMISSION DATE/ TIME: February 4, 2022; between 8:30 AM and 11:00 AM
BID OPENING DATE/ TIME: February 4, 2022; 11:30 AM

PROJECT No. : SANDRESPC

TITLE: EAST SIDE COASTAL RESILENCY FROM MONTGOMERY STREET TO EAST 25TH STREET

ADDENDA ISSUED	NO. OF DWG	DATE	APPROVED BY:	
			SPECS UNIT	GENERAL COUNSEL
# 1Questions from Bidders and Responses to Questions; Revisions to PASSPort Forms;		11/18/2021		
#2 Revised Bid Opening Date; Questions from Bidders and Responses to Questions; Revisions to Documents; Revisions to PASSPort Forms		11/24/2021		
#3 Revised Bid Opening Date ; Questions from Bidders and Responses to Questions; Revisions to PASSPort Forms; Revisions to Documents	4	12/23/2021		
#4 Questions from Bidders and Responses to Questions; Revisions to Documents	11	1/12/2022		
#5 Revised Bid Opening Date Questions from Bidders and Responses to Questions; Revisions to Documents		1/24/2022		
#6 Questions from Bidders and Responses to Questions; Revisions to Documents	18	1/28/2022		CAC approved

THE CITY OF NEW YORK
DEPARTMENT OF DESIGN AND CONSTRUCTION
DIVISION OF INFRASTRUCTURE

1/28/2022

ADDENDUM No. # 6

FOR FURNISHING ALL LABOR AND MATERIAL NECESSARY AND REQUIRED FOR:

85021B0117 – SANDRESPC

EAST SIDE COASTAL RESILENCY FROM MONTGOMERY STREET TO EAST 25TH STREET

This addendum is issued for the purpose of amending the requirements of the Bid and Contract Documents and is hereby made a part of said Bid and Contract Documents to the same extent as though it were originally included therein.

The bidder is advised that the items listed below apply to the project:

1. Bidders Questions and Responses to Questions:
See Attachment A.

2. Revisions to Documents:
See Attachment B.

3. Revisions to PASSPort forms:
See Attachment C.

Transferring Data Between Rounds of an RFX: A new document titled "Transferring Data Between Rounds of an RFX" has been added to the Documents section of the View RFx tab. Please refer to this document when an addendum has been issued. Note: Whenever an addendum is issued, the RFX item grid will be cleared. You can import the work you have already done by following the steps on this document.

DDC strongly advises vendors to finalize and submit bids 48 hours prior to due date and time. The City is not responsible for technical issues (e.g. internet connection, power outages, technology malfunction, computer errors, etc.) related to bid submissions.

If additional information is required, please contact the Department of Design and Construction, Contract Section at (718) 391-1041 or by email at CSB_projectinquiries@ddc.nyc.gov.

Richard Jones, PE CWI CDT
Executive Director, Specifications

DDC PROJECT #: **SANDRESPC**

PROJECT NAME: **EAST SIDE COASTAL RESILENCY FROM MONTGOMERY STREET TO EAST 25TH STREET**

ATTACHMENT A - BIDDERS QUESTIONS AND DDC RESPONSES

ADDENDUM QUESTION #	BIDDER'S QUESTION	RESPONSE
1	In order to develop a final design for the north and south interceptor gate chambers SOE, it is imperative that we can understand the basis of the suggested conceptual SOE design provided in the contract plans. Please clarify the purpose of including jet grouting or deep soil mixing to a depth 60ft for the south chamber and 90ft for the north chamber? Please also clarify why additional ground improvements for 10ft below bottom of chamber elevation are shown later in the suggested sequence for each location (assuming jet grout or soil mixing to further depths was previously indicated earlier in the sequence)? Are there specific design criteria related to these features that must be included in the design finalized by contractor.	Soils are weak at the site location, and the conceptual SOE design is based on the improved soil conditions.
2	In order to develop a final design for the north and south interceptor gate chambers SOE, it is imperative that we can understand the basis of the suggested conceptual SOE design provided in the contract plans. Please clarify the purpose of including micropiles to support the chamber structure if the suggested SOE sequence already includes jet grouting or soil mixing to 60ft (south chamber) and 90ft (north chamber) and additional 10 ft of ground improvements. If the purpose of ground improvements is to create a water-tight SOE system, would the installation of micropiles through the improved ground conditions penetrate and cause leakage into the closed SOE system?	Micropiles are required to provide additional support against additional support against the uplift forces.
3	Please provide a detail for the lightning protection downleads and connection to ground ring shown on drawing E-704.	Drawings E-700, E-704, E-706, E-800, and E-804 have been revised. Refer to Attachment B of this Addendum.
4	Please refer to NGC302. There is a call out for a 4” concrete sidewalk, however the bid item number does not match. Please provide clarification.	Drawing NGC302 has been revised. Refer to Attachment B of Addendum 4.

ADDENDUM QUESTION #	BIDDER'S QUESTION	RESPONSE
5	Electrical One Line Diagram shows power connection to security cameras to be installed however we cannot locate the cameras on the drawings and there are no details specified regarding them. Are DVRs required for the CCTV cameras? What kind of communication connections are required?	Security cameras are not required; the circuit has been revised for the flow switch circuit. Drawings E-705 and E-805 have been revised. Refer to Attachment B of this Addendum.
6	For North building electrical grounding connections to Trans S cabinet and Water main pipe, drawing E804 states to use ¾" size conduit. Drawing E805 one line diagram shows 1" size conduit. Please clarify which size to use. Same issue exists at the Southern building drawings as well.	Provide 1"C for electric service ground conductors to Trans S cabinet from perimeter ground loop and incoming water main. Provide 1"C for bonding of incoming water main to perimeter ground loop. Drawings E-704 and E-804 have been revised. Refer to Attachment B of this Addendum.
7	Please refer to drawing E804, note 4. Is the note supposed to say "grounding conduit" instead? Does this note apply to exposed conduit on the roof and exposed conduit connections to Trans S cabinet and Water main pipe?	Note 4 on drawings E-704 and E-804 has been revised. Refer to Attachment B of this Addendum.
8	Drawing E705 shows a circuit from panel SIGH to feed Bypass Gate Valve, however we cannot find the location of this valve in the drawing set. Please provide information on where this valve is located.	By-pass gate valve has been removed from panel SIGH and NIGH. Drawings E-705 and E-805 have been revised. Refer to Attachment B of this Addendum.
9	We are having trouble locating the 2.6kW oil immersion heater shown on the electrical one-line diagram on E705. Please provide information on where it is located.	Oil Immersion heater has been removed from SIGL and NIGL. Drawings E-705 and E-805 have been revised. Refer to Attachment B of this Addendum.
10	Drawing IGE110 shows FS-014 to get 120V power but this circuit is not shown on the panel schedule for panel SIGL on drawing E-705. Please revise the drawing to include the flow switch circuit.	Drawings E-705 and E-805 have been revised. Refer to Attachment B of this Addendum.
11	The flood loading information in specification section 08 42 39 (Removable Aluminum Flood Barriers) is inconsistent with the flood loading information in specification section 08 39 00 (Watertight Hatches). Please advise.	Section 08 39 00 "Watertight Hatches" and Section 08 42 39 "Removable Aluminum Flood Barriers" in the IGB-Pages have been revised to address the discrepancy in flood loading. Refer to Attachment B of this Addendum.
12	Are FM labeled flood mitigation devices required for both specification sections 08 42 39 (Removable Aluminum Flood Barriers) & 08 39 00 (Watertight Hatches)?	Section 08 42 39 "Removable Aluminum Flood Barriers" in the IGB-Pages has been revised to clarify the requirement: FM 2510 labeled products are not required for either section. Refer to Attachment B of this Addendum.

ADDENDUM QUESTION #	**BIDDER'S QUESTION**	**RESPONSE**
13	The flood planks to protect the windows at both the North and South buildings, as shown on the plans, cannot be an FM labeled flood plank system due to the reverse pressure (off-seating) design. In order to have FM labeled flood planks, the system must be designed as positive pressure (on-seating). Please advise.	Section 08 42 39 "Removable Aluminum Flood Barriers" in the IGB-Pages has been revised to clarify the requirement for FM labeled products. As shown on drawings 4 & 5 of A770/A870, Type B Flood Barriers (at windows of North and South IGBs) are to be provided with an offset frame so that the flood planks receive positive pressure. The offset frame transfers the loads back to the building structure which is mechanically fixed to address the reverse pressure. Refer to Attachment B of this Addendum.
14	Drawings TS300 and TS301 have an incorrect scale. Please revise.	Drawings TC300 and TC301 have been revised. Refer to Attachment B of this Addendum.
15	We cannot locate the locations for temporary lighting as required per bid item SL-29.01.03. Please provide information on where this is required.	Temporary lighting shall be provide as per Note 5 on drawing SL350 and as directed by the Engineer. It is anticipated to be required as part of the realignment of the northbound Avenue C under the elevated FDR Drive (drawing TC391) and where sewer trenching impacts lights (drawings TC322 and TC328A).
16	We cannot locate ¾” and 1.5” Hot Dipped Galv steel conduit items in the project documents. The Bid items associated with these items are SL-35.09.01 and SL-35.09.03 respectively.	Items SL-35.09.01 and SL-35.09.03 have been deleted. Refer to Attachment C of this Addendum.
17	According to the Insurance requirements, the US Longshoremen’s and Harbor Workers Compensation has to be included in this project. Please confirm that this is correct knowing that there won’t be any work within 100’ of distance between the limits of work and navigable waters.	US LS&H Insurance is required as shown.
18	The Umbrella/Excess Liability Insurance required for this project is $45,000,000, please confirm that this value is correct because it seems excessive for this project and would increase the cost significantly.	$45 million is correct.

DDC PROJECT #: **SANDRESPC**

PROJECT NAME: **EAST SIDE COASTAL RESILENCY FROM MONTGOMERY STREET TO EAST 25TH STREET**

ATTACHMENT B – REVISIONS TO THE DOCUMENTS

1. Volume 3 has been updated. Changes are Listed below:
    - IGB Pages Updated. Changes made to Section 01 11 00, Section 08 39 00 and Section 08 42 39.

2. The following Contract Drawings have been revised and replaced:
    - TS300
    - TS301
    - E-700.00
    - E-701.00
    - E-704.00
    - E-705.00
    - E-706.00
    - P-701.00
    - E-800.00
    - E-801.00
    - E-804.00
    - E-805.00
    - P-801.00
    - IGS100
    - IGS105
    - SGS801
    - NGC306
    - LD727

DDC PROJECT #: **SANDRESPC**

PROJECT NAME: **EAST SIDE COASTAL RESILENCY FROM MONTGOMERY STREET TO EAST 25TH STREET**

ATTACHMENT C – REVISIONS TO PASSPORT FORMS

This Addendum initiates Round 7 of the procurement.

Please note that numbering of addenda is independent of rounds.

Questionnaire Changes:

None

Item Grid Changes:

Deleted Items:

1. ESCR-51.11CNIG
2. ESCR-51.11CSIG
3. SL-20.02.10
4. SL-21.04.14
5. SL-22.17.03
6. SL-28.01.02
7. SL-35.09.01
8. SL-35.09.03

Added Items:

1. 51.11CNIG
2. 51.11CSIG
3. 64.12COEG
4. 64.12ESEG
5. 64.13WC20
6. SL-20.02.02
7. SL-21.09.08
8. SL-24.02.39
9. SL-24.04.04
10. SL-24.04.16
11. SL-25.01.06
12. SL-25.01.11
13. SL-26.06.02

Revised Quantity:

1. SL-20.08.01
2. SL-21.03.02
3. SL-21.09.05
4. SL-22.16.05
5. SL-24.02.02

CITY OF NEW YORK
DEPARTMENT OF DESIGN AND CONSTRUCTION
DIVISION OF INFRASTRUCTURE

ADDENDA CONTROL SHEET

BID SUBMISSION DATE/ TIME: February 4, 2022; between 8:30 AM and 11:00 AM
BID OPENING DATE/ TIME: February 4, 2022; 11:30 AM

PROJECT No. : SANDRESPC

TITLE: EAST SIDE COASTAL RESILENCY FROM MONTGOMERY STREET TO EAST 25TH STREET

ADDENDA ISSUED	NO. OF DWG	DATE	APPROVED BY: SPECS UNIT	APPROVED BY: GENERAL COUNSEL
# 1Questions from Bidders and Responses to Questions; Revisions to PASSPort Forms;		11/18/2021		
#2 Revised Bid Opening Date; Questions from Bidders and Responses to Questions; Revisions to Documents; Revisions to PASSPort Forms		11/24/2021		
#3 Revised Bid Opening Date ; Questions from Bidders and Responses to Questions; Revisions to PASSPort Forms; Revisions to Documents	4	12/23/2021		
#4 Questions from Bidders and Responses to Questions; Revisions to Documents	11	1/12/2022		
#5 Revised Bid Opening Date Questions from Bidders and Responses to Questions; Revisions to Documents		1/24/2022		
#6 Questions from Bidders and Responses to Questions; Revisions to Documents	18	1/28/2022		
#7 Questions from Bidders		2/2/2022		Candace Chung

THE CITY OF NEW YORK
DEPARTMENT OF DESIGN AND CONSTRUCTION
DIVISION OF INFRASTRUCTURE

2/2/2022

ADDENDUM No. # 7

FOR FURNISHING ALL LABOR AND MATERIAL NECESSARY AND REQUIRED FOR:

85021B0117 – SANDRESPC

EAST SIDE COASTAL RESILENCY FROM MONTGOMERY STREET TO EAST 25TH STREET

This addendum is issued for the purpose of amending the requirements of the Bid and Contract Documents and is hereby made a part of said Bid and Contract Documents to the same extent as though it were originally included therein.

The bidder is advised that the items listed below apply to the project:

1. Bidders Questions and Responses to Questions:
See Attachment A.

2. Revisions to Documents:
No Attachment B is included with this Addendum.

3. Revisions to PASSPort forms:
No Attachment C is included with this Addendum.

Transferring Data Between Rounds of an RFX: A new document titled "Transferring Data Between Rounds of an RFX" has been added to the Documents section of the View RFx tab. Please refer to this document when an addendum has been issued. Note: Whenever an addendum is issued, the RFX item grid will be cleared. You can import the work you have already done by following the steps on this document.

DDC strongly advises vendors to finalize and submit bids 48 hours prior to due date and time. The City is not responsible for technical issues (e.g. internet connection, power outages, technology malfunction, computer errors, etc.) related to bid submissions.

If additional information is required, please contact the Department of Design and Construction, Contract Section at (718) 391-1041 or by email at CSB_projectinquiries@ddc.nyc.gov.

Richard Jones, PE CWI CDT
Executive Director, Specifications

DDC PROJECT #: **SANDRESPC**

PROJECT NAME: **EAST SIDE COASTAL RESILENCY FROM MONTGOMERY STREET TO EAST 25TH STREET**

ATTACHMENT A - BIDDERS QUESTIONS AND DDC RESPONSES

ADDENDUM QUESTION #	BIDDER'S QUESTION	RESPONSE
1	Please specify or provide a pay item number for all excavation and backfill associated with the interceptor gate chambers.	Payment for excavation and backfill for the interceptor gate chambers shall be included in the respective lump sum items 51.11CNIG and 51.11CSIG.
2	Please provide further clarity regarding the limits of payment for each of the lump sum ESCR-51.11 and ESCR 51.12 items (Chamber No. 3; Northern Interceptor Gate Chamber; Southern Interceptor Gate Chamber; North and South Interceptor Gates; Interceptor Gate Spare Parts). The current specifications do not provide sufficient clarity regarding which scopes of work are included under which lump sum item (specifically, Section 01 11 00 – Summary of Works should be much more comprehensive in this regard).	Refer to Attachment C of Addendum 6 for revised interceptor gate chamber pay item numbers (51.11CNIG and 51.11CSIG). Each chamber (Chamber No. 3, North IG Chamber, South IG Chamber) is a separate LS item, in place, complete as described in the specification. Payment for LS Item ESCR-51.12SG108 is further described in 40 05 59.02 in the IG/PC-Pages, Para 1.02.A and B. In addition, see revised drawings IGS100 and IGS105 in Attachment B of Addendum 6.
3	Please clarify which sections of the building/chamber need NEMA 7 explosion proof enclosures and which sections need NEMA 12.	Section 01 11 00 "Summary of Works: Interceptor Gates and Parallel Conveyance (IG/PC)" in the IG/PC-Pages has been revised. Refer to Attachment B of Addendum 5.
4	Drawing PCS313 Load Testing Note 1 Table states to see Drawing PCS400 for the estimated casing tip elevations. Please clarify if the "Minimum Tip Elevations" provided in the Foundation Recommendations Schedule on drawing PCS300 are the Minimum Casing Tip Elevations or minimum Pile Tip Elevations?	Note 1 does not refer to drawing PCS400 (PCS400 does not exist). The Pile Tip elevation is shown on drawing PCS300. Casing and concrete length of the pile, are detailed and noted on drawing PCS314 which show Elevation/Cross Section detail of the pile.
5	Drawing PCS300 Note 5 states "This is the total ultimate axial capacity". Please advise what value this note applies to.	Table on drawing PCS300 shows the allowable axial pile capacity and Note 5 implies that the pile should not be loaded more than the allowable axial capacity shown on the table on drawing PCS300.
6	Drawing PCS300 Note 6 states "This is the total ultimate uplift capacity". Please advise what value this note applies to.	Table on drawing PCS300 shows the allowable pile uplift capacity and Note 6 implies that the pile should not be loaded more than the allowable uplift capacity shown on the table on drawing PCS300.

ADDENDUM QUESTION #	**BIDDER'S QUESTION**	**RESPONSE**
7	Please clarify the locations of the pile load tests for the 9-5/8” micropiles.	Assume for bidding 1 test each for M-27, M-28 and M-31 and 4 tests along Avenue C.

DDC PROJECT #: **SANDRESPC**

PROJECT NAME: **EAST SIDE COASTAL RESILENCY FROM MONTGOMERY STREET TO EAST 25TH STREET**

ATTACHMENT B – REVISIONS TO THE DOCUMENTS

None

DDC PROJECT #: **SANDRESPC**

PROJECT NAME: **EAST SIDE COASTAL RESILENCY FROM MONTGOMERY STREET TO EAST 25TH STREET**

ATTACHMENT C – REVISIONS TO PASSPORT FORMS

This Addendum is included within Round 7 of the procurement.

Please note that numbering of addenda is independent of rounds.

Questionnaire Changes:

None

Item Grid Changes:

None

CITY OF NEW YORK
DEPARTMENT OF DESIGN AND CONSTRUCTION
DIVISION OF INFRASTRUCTURE

ADDENDA CONTROL SHEET

BID SUBMISSION DATE/ TIME: February 8, 2022; between 8:30 AM and 11:00 AM
BID OPENING DATE/ TIME: February 8, 2022; 11:30 AM

PROJECT No. : SANDRESPC

TITLE: EAST SIDE COASTAL RESILENCY FROM MONTGOMERY STREET TO EAST 25TH STREET

ADDENDA ISSUED	NO. OF DWG	DATE	APPROVED BY:	
			SPECS UNIT	GENERAL COUNSEL
# 1Questions from Bidders and Responses to Questions; Revisions to PASSPort Forms;		11/18/2021		
#2 Revised Bid Opening Date; Questions from Bidders and Responses to Questions; Revisions to Documents; Revisions to PASSPort Forms		11/24/2021		
#3 Revised Bid Opening Date ; Questions from Bidders and Responses to Questions; Revisions to PASSPort Forms; Revisions to Documents	4	12/23/2021		
#4 Questions from Bidders and Responses to Questions; Revisions to Documents	11	1/12/2022		
#5 Revised Bid Opening Date Questions from Bidders and Responses to Questions; Revisions to Documents		1/24/2022		
#6 Questions from Bidders and Responses to Questions; Revisions to Documents	18	1/28/2022		
#7 Questions from Bidders		2/2/2022		
#8 Revised Bid Opening Date		2/4/2022		

THE CITY OF NEW YORK
DEPARTMENT OF DESIGN AND CONSTRUCTION
DIVISION OF INFRASTRUCTURE

2/4/2022

ADDENDUM No. # 8

FOR FURNISHING ALL LABOR AND MATERIAL NECESSARY AND REQUIRED FOR:

85021B0117 – SANDRESPC

EAST SIDE COASTAL RESILENCY FROM MONTGOMERY STREET TO EAST 25TH STREET

This addendum is issued for the purpose of amending the requirements of the Bid and Contract Documents and is hereby made a part of said Bid and Contract Documents to the same extent as though it were originally included therein.

The bidder is advised that the items listed below apply to the project:

1. **The Bid Opening for the contract described below scheduled for February 4, 2022 at 11:30 am.is rescheduled to February 8, 2022 at 11:30 am.**

2. **Bidders Questions and Responses to Questions:**
   No Attachment A is included with this Addendum..

3. **Revisions to Documents:**
   No Attachment B is included with this Addendum.

4. **Revisions to PASSPort forms:**
   No Attachment C is included with this Addendum.

Transferring Data Between Rounds of an RFX: A new document titled "Transferring Data Between Rounds of an RFX" has been added to the Documents section of the View RFx tab. Please refer to this document when an addendum has been issued. Note: Whenever an addendum is issued, the RFX item grid will be cleared. You can import the work you have already done by following the steps on this document.

DDC strongly advises vendors to finalize and submit bids 48 hours prior to due date and time. The City is not responsible for technical issues (e.g. internet connection, power outages, technology malfunction, computer errors, etc.) related to bid submissions.

If additional information is required, please contact the Department of Design and Construction, Contract Section at (718) 391-1041 or by email at CSB_projectinquiries@ddc.nyc.gov.

Richard Jones, PE, CWI CDT
Executive Director, Specifications

DDC PROJECT #: **SANDRESPC**

PROJECT NAME: **EAST SIDE COASTAL RESILENCY FROM MONTGOMERY STREET TO EAST 25TH STREET**

ATTACHMENT A - BIDDERS QUESTIONS AND DDC RESPONSES

None

DDC PROJECT #: **SANDRESPC**

PROJECT NAME: **EAST SIDE COASTAL RESILENCY FROM MONTGOMERY STREET TO EAST 25TH STREET**

ATTACHMENT B – REVISIONS TO THE DOCUMENTS

None

DDC PROJECT #: **SANDRESPC**

PROJECT NAME: **EAST SIDE COASTAL RESILENCY FROM MONTGOMERY STREET TO EAST 25TH STREET**

ATTACHMENT C – REVISIONS TO PASSPORT FORMS

This Addendum is included within Round 7 of the procurement.

Please note that numbering of addenda is independent of rounds.

Questionnaire Changes:

None

Item Grid Changes:

None

CITY OF NEW YORK
DEPARTMENT OF DESIGN AND CONSTRUCTION
DIVISION OF INFRASTRUCTURE

ADDENDA CONTROL SHEET

BID SUBMISSION DATE/ TIME: February 10, 2022; between 8:30 AM and 11:00 AM
BID OPENING DATE/ TIME: February 10, 2022; 11:30 AM

PROJECT No. : SANDRESPC

TITLE: EAST SIDE COASTAL RESILENCY FROM MONTGOMERY STREET TO EAST 25TH STREET

ADDENDA ISSUED	NO. OF DWG	DATE	APPROVED BY:	
			SPECS UNIT	GENERAL COUNSEL
# 1Questions from Bidders and Responses to Questions; Revisions to PASSPort Forms;		11/18/2021		
#2 Revised Bid Opening Date; Questions from Bidders and Responses to Questions; Revisions to Documents; Revisions to PASSPort Forms		11/24/2021		
#3 Revised Bid Opening Date ; Questions from Bidders and Responses to Questions; Revisions to PASSPort Forms; Revisions to Documents	4	12/23/2021		
#4 Questions from Bidders and Responses to Questions; Revisions to Documents	11	1/12/2022		
#5 Revised Bid Opening Date Questions from Bidders and Responses to Questions; Revisions to Documents		1/24/2022		
#6 Questions from Bidders and Responses to Questions; Revisions to Documents	18	1/28/2022		
#7 Questions from Bidders		2/2/2022		
#8 Revised Bid Opening Date		2/4/2022		
#9 Revised Bid Opening Date		2/7/2022		

THE CITY OF NEW YORK
DEPARTMENT OF DESIGN AND CONSTRUCTION
DIVISION OF INFRASTRUCTURE

2/7/2022

ADDENDUM No. # 8

FOR FURNISHING ALL LABOR AND MATERIAL NECESSARY AND REQUIRED FOR:

85021B0117 – SANDRESPC

EAST SIDE COASTAL RESILENCY FROM MONTGOMERY STREET TO EAST 25TH STREET

This addendum is issued for the purpose of amending the requirements of the Bid and Contract Documents and is hereby made a part of said Bid and Contract Documents to the same extent as though it were originally included therein.

The bidder is advised that the items listed below apply to the project:

1. **The Bid Opening for the contract described below scheduled for February 8, 2022 at 11:30 am.is rescheduled to February 10, 2022 at 11:30 am.**

2. **Bidders Questions and Responses to Questions:**
   No Attachment A is included with this Addendum..

3. **Revisions to Documents:**
   No Attachment B is included with this Addendum.

4. **Revisions to PASSPort forms:**
   No Attachment C is included with this Addendum.

Transferring Data Between Rounds of an RFX: A new document titled “Transferring Data Between Rounds of an RFX” has been added to the Documents section of the View RFx tab. Please refer to this document when an addendum has been issued. Note: Whenever an addendum is issued, the RFX item grid will be cleared. You can import the work you have already done by following the steps on this document.

DDC strongly advises vendors to finalize and submit bids 48 hours prior to due date and time. The City is not responsible for technical issues (e.g. internet connection, power outages, technology malfunction, computer errors, etc.) related to bid submissions.

If additional information is required, please contact the Department of Design and Construction, Contract Section at (718) 391-1041 or by email at CSB_projectinquiries@ddc.nyc.gov.

Richard Jones, PE CWI CDT
Executive Director, Specifications

DDC PROJECT #: **SANDRESPC**

PROJECT NAME: **EAST SIDE COASTAL RESILENCY FROM MONTGOMERY STREET TO EAST 25TH STREET**

ATTACHMENT A - BIDDERS QUESTIONS AND DDC RESPONSES

None

DDC PROJECT #: **SANDRESPC**

PROJECT NAME: **EAST SIDE COASTAL RESILENCY FROM MONTGOMERY STREET TO EAST 25TH STREET**

ATTACHMENT B – REVISIONS TO THE DOCUMENTS

None

DDC PROJECT #: **SANDRESPC**

PROJECT NAME: **EAST SIDE COASTAL RESILENCY FROM MONTGOMERY STREET TO EAST 25TH STREET**

ATTACHMENT C – REVISIONS TO PASSPORT FORMS

This Addendum is included within Round 7 of the procurement.

Please note that numbering of addenda is independent of rounds.

Questionnaire Changes:

None

Item Grid Changes:

None

Department of Design and Construction

INFRASTRUCTURE DIVISION

BUREAU OF DESIGN

VOLUME 3 OF 3

PROJECT ID: SANDRESPC

EAST SIDE COASTAL RESILENCY FROM MONTGOMERY STREET TO EAST 25TH STREET

TOGETHER WITH ALL WORK INCIDENTAL THERETO

SEWER WORK, INTERCEPTOR GATES AND GATE HOUSES, STREET LIGHTING, AND TRAFFIC WORK

Together With All Work Incidental Thereto
BOROUGH OF MANHATTAN
CITY OF NEW YORK